Find us on Facebook

BISHKO AUTOMOBILE LITERATURE

Navigation Tools: Click on the “Table of Contents” below, or use the Bookmarks to the left.

1997 Ford F-250/F-350 & Super Duty

TABLE OF CONTENTS

INTRODUCTION

GROUP 00 SERVICE INFORMATION

GROUP 01 BODY

GROUP 02 FRAME AND MOUNTING

GROUP 04 SUSPENSION

GROUP 06 BRAKE SYSTEM

GROUP 11 STEERING SYSTEM

GROUP 12 CLIMATE CONTROL SYSTEM

GROUP 13 INSTRUMENTATION AND WARNING SYSTEMS

GROUP 14 BATTERY AND CHARGING SYSTEM

GROUP 15 AUDIO SYSTEMS

GROUP 17 LIGHTING

INDEX

Official Licensed Product
Ford Motor Company

All rights reserved. Reproduction by any means, electronic or mechanical, including photocopying, recording, or by any information storage and retrieval system or translation in whole or part is not permitted without written authorization from Ford Motor Company. Copyright © 1996, Ford Motor Company

INTRODUCTION

NOTE: The descriptions and specifications contained in this manual were in effect at the time this manual was approved for printing. Ford Motor Company reserves the right to discontinue models at any time, or change specifications or design without notice and without incurring any obligation.

IMPORTANT SAFETY NOTICE

Appropriate service methods and procedures are essential for the safe, reliable operation of all motor vehicles as well as the personal safety of the individual doing the work. This manual provides general directions for performing service with tested, effective techniques. Following them will help assure reliability.

There are numerous variations in procedure, techniques, tools and parts for servicing vehicles, as well as in the skill of the individual doing the work. This manual cannot possibly anticipate all such variations and provide advice or cautions as to each. Accordingly, anyone who departs from the instructions provided in this manual must first establish that he comprises neither his personal safety nor the vehicle integrity by his choice of methods, tools or parts.

Official Licensed Product
Ford Motor Company

NOTES, CAUTIONS, AND WARNINGS

As you read through the procedures, you will come across **NOTES**, **CAUTIONS**, and **WARNINGS**. Each one is there for a specific purpose. **NOTES** give you added information that will help you to perform a particular procedure. **CAUTIONS** are given to prevent you from making an error that could damage the vehicle. **WARNINGS** remind you to be especially careful in those areas where carelessness can cause you personal injury. The following list contains some general **WARNINGS** that you should follow when you work on a vehicle.

- **ALWAYS WEAR SAFETY GLASSES FOR EYE PROTECTION.**
- **USE SAFETY STANDS WHENEVER A PROCEDURE REQUIRES YOU TO BE UNDER THE VEHICLE.**
- **MAKE SURE THAT THE IGNITION SWITCH IS ALWAYS IN THE OFF POSITION, UNLESS OTHERWISE REQUIRED BY THE PROCEDURE.**
- **SET THE PARKING BRAKE WHEN WORKING ON THE VEHICLE. IF YOU HAVE AN AUTOMATIC TRANSMISSION, SET IN PARK UNLESS INSTRUCTED OTHERWISE FOR A SPECIFIC OPERATION. IF YOU HAVE A MANUAL TRANSMISSION, IT SHOULD BE IN REVERSE (ENGINE OFF) OR NEUTRAL (ENGINE ON) UNLESS INSTRUCTED OTHERWISE FOR A SPECIFIC OPERATION. PLACE WOOD BLOCKS (4" X 4" OR LARGER) AGAINST THE FRONT AND REAR SURFACES OF THE TIRES TO HELP PREVENT THE VEHICLE FROM MOVING.**
- **OPERATE THE ENGINE ONLY IN A WELL-VENTILATED AREA TO AVOID THE DANGER OF CARBON MONOXIDE POISONING.**
- **KEEP YOURSELF AND YOUR CLOTHING AWAY FROM MOVING PARTS WHEN THE ENGINE IS RUNNING, ESPECIALLY THE DRIVE BELTS.**
- **TO PREVENT SERIOUS BURNS, AVOID CONTACT WITH HOT METAL PARTS SUCH AS THE RADIATOR, EXHAUST MANIFOLD, TAIL PIPE, THREE-WAY CATALYTIC CONVERTER AND MUFFLER.**
- **DO NOT SMOKE WHILE WORKING ON A VEHICLE.**
- **TO AVOID INJURY, ALWAYS REMOVE RINGS, WATCHES, LOOSE HANGING JEWELRY AND LOOSE CLOTHING BEFORE BEGINNING TO WORK ON A VEHICLE.**
- **WHEN IT IS NECESSARY TO WORK UNDER THE HOOD, KEEP HANDS AND OTHER OBJECTS CLEAR OF THE RADIATOR FAN BLADES!**

GROUP

SERVICE INFORMATION 00

SECTION TITLE	PAGE
IDENTIFICATION CODES	00-01-1
LIFTING AND JACKING	00-02-1
NOISE, VIBRATION AND HARSHNESS	00-04-1

SECTION 00-01 Identification Codes

Official Licensed Product

SUBJECT	PAGE
VEHICLE APPLICATION	00-01-1
DESCRIPTION AND OPERATION	
Certification Label	00-01-2
Vehicle Identification Number (VIN)	00-01-1
VEHICLE IDENTIFICATION NUMBER	
Assembly Plant Codes	00-01-7
Brake System and GVWR Class	00-01-5
Check Digit for All Vehicles	00-01-7
Engine Type, Displacement, Cylinders, Fuel and Manufacturer	00-01-6
Model or Line, Series, Chassis, Cab or Body Type	00-01-6
Production Sequence Number	00-01-7
Vehicle Model Year	00-01-7
World Manufacturer Identifier	00-01-5
VEHICLE CERTIFICATION LABEL (VC LABEL)	
CODES	
Axle Ratio Codes	00-01-13
Brake Type Codes	00-01-10
Exterior Paint Color Codes	00-01-8
Interior Trim Type Codes	00-01-9
Radio Codes	00-01-12
Region, Special Order and Wheelbase Codes	00-01-16
Suspension Spring Codes	00-01-15
Tape Stripe Codes	00-01-11
Transmission Codes	00-01-14
Vehicle Type Codes	00-01-7

VEHICLE APPLICATION

F-250 Heavy Duty, F-350 and F-Super Duty

DESCRIPTION AND OPERATION

Vehicle Identification Number (VIN)

A 17-digit combination of numbers and letters forms the vehicle identification number (VIN). The VIN is stamped on a metal tab that is riveted to the instrument panel close to the windshield. The VIN is viewable by looking through the front windshield on the driver's side. The VIN is also found on the certification label.

By looking at the 17-digit VIN, a variety of information about the vehicle can be determined.

- The first three digits identify the manufacturer and the vehicle make and type.
- The fourth digit indicates the gross vehicle weight rating (GVWR class) and brake system for Ford-completed trucks and MPV's. For buses and incomplete vehicles, the fourth digit identifies only the brake system.
- Digits five, six and seven identify the model or line, series, chassis, and cab or body type.

DESCRIPTION AND OPERATION (Continued)

- The eighth digit points out the particular engine found in the vehicle.
- Digit nine is the VIN check digit.
- The tenth digit identifies the model year of a Ford-completed vehicle, or the model year of the incomplete vehicle if sold by Ford as an incomplete vehicle.
- The eleventh digit indicates the assembly plant.
- Digits 12 through 17 make up the sequence serial and warranty number. Digit 12 uses the letter A until the production or sequence of 99,999 units (digits 13 through 17) is reached. Letter A then becomes B for the next production sequence of vehicles.

Refer to the code definition portion of this section for specific definitions of the numbers and letters of the vehicle identification number (VIN).

SAMPLE VIN

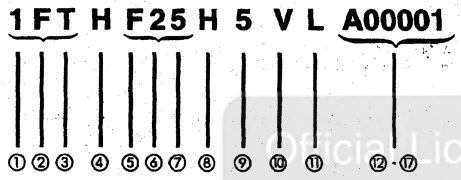

POSITIONS 1, 2 AND 3 — MANUFACTURER, MAKE AND TYPE (WORLD MANUFACTURER IDENTIFIER)

POSITION 4 — BRAKE SYSTEM/GVWR CLASS FOR FORD-COMPLETED TRUCKS. FOR BUSES AND INCOMPLETE VEHICLES, BRAKE SYSTEM ONLY.

POSITIONS 5, 6, AND 7 — MODEL OR LINE, SERIES, CHASSIS, CAB OR BODY TYPE

POSITION 8 — ENGINE TYPE

POSITION 9 — CHECK DIGIT

POSITION 10 — MODEL YEAR (FORD-COMPLETED VEHICLES)

POSITION 11 — ASSEMBLY PLANT

POSITIONS 12 THROUGH 17 — SEQUENCE NUMBER BEGINS AT A00001, CONTINUES UNTIL SEQUENCE NUMBER A99,999 IS REACHED, THEN CHANGES TO B00001, AND SO ON.

DY0030-A

Official Licensed Product Motorcraft Company

Certification Label

- The English certification label is attached to the driver side door or door lock pillar.
- The label contains the name of the manufacturer, the month and year of manufacture, the certification statement and the vehicle identification number (VIN).
- The label also contains gross vehicle weight ratings, wheel and tire data and information codes for additional vehicle data.

DESCRIPTION AND OPERATION (Continued)

Certification Labels, Typical

UNITED STATES BUILT

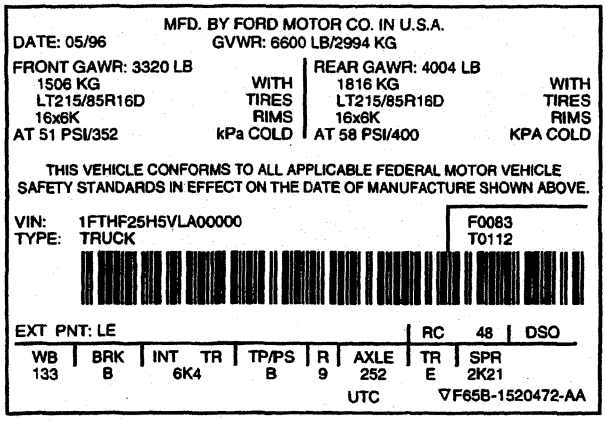

U.S. BUILT, CANADIAN SALES

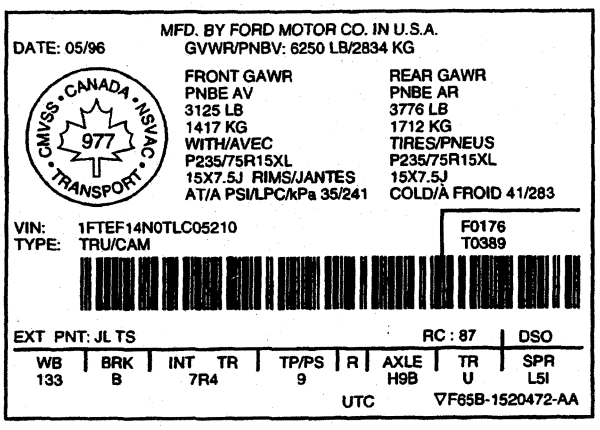

MEXICAN BUILT

CANADIAN BUILT

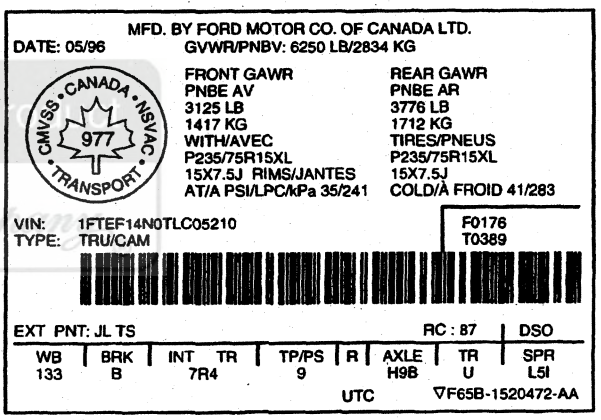

INCOMPLETE VEHICLE U.S. BUILT, U.S SALES

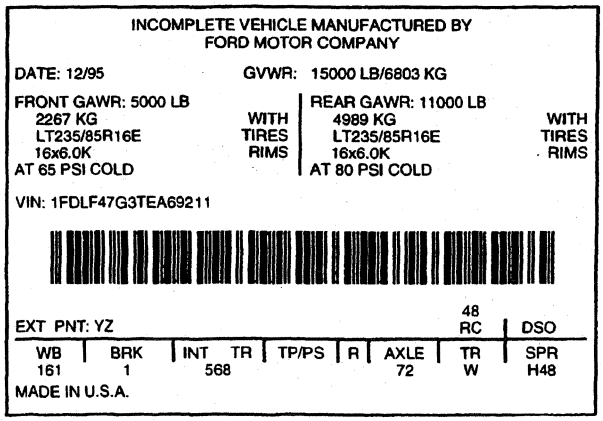

INCOMPLETE VEHICLE U.S. BUILT, CANADIAN SALES

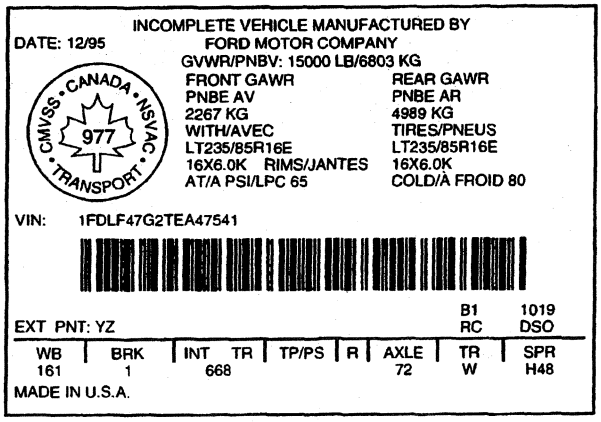

DY0142-A

Ford Motor Company Confidential Proprietary

DESCRIPTION AND OPERATION (Continued)

Certification Label Codes

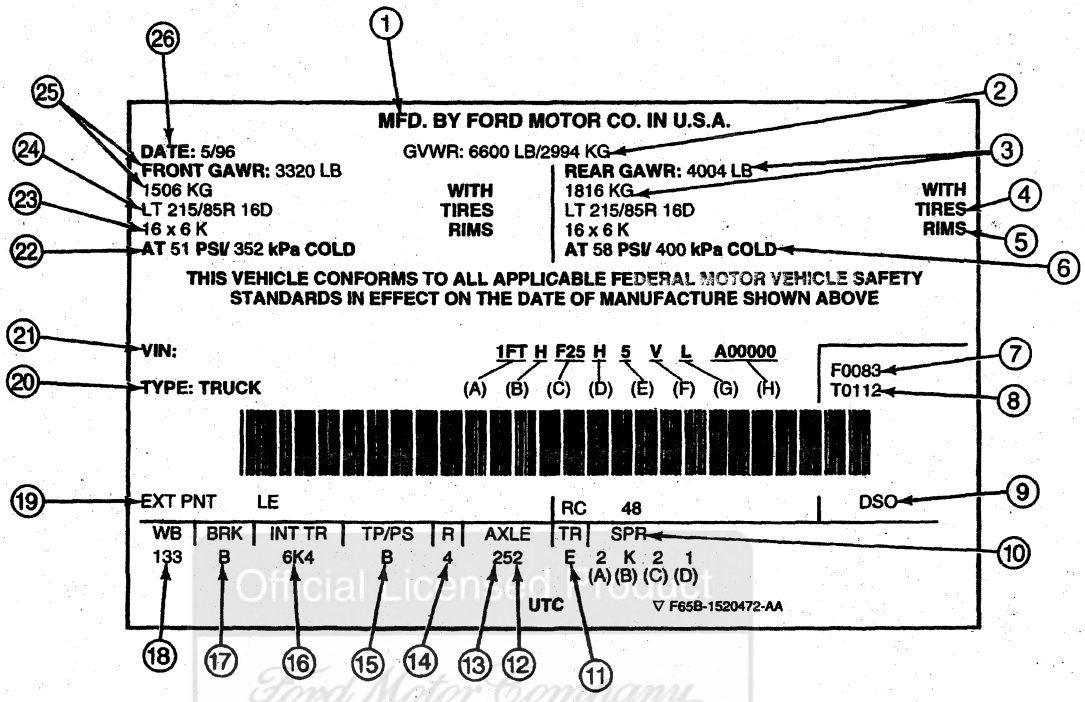

① NAME AND LOCATION OF MANUFACTURER

② GROSS VEHICLE WEIGHT RATING IN POUNDS (LB) AND KILOGRAMS (KG)

③ REAR GROSS AXLE WEIGHT RATING IN POUNDS (LB) AND KILOGRAMS (KG)

④ REAR TIRE SIZE

⑤ RIM SIZE

⑥ REAR TIRE COLD PSI

⑦ FRONT AXLE ACCESSORY RESERVE CAPACITY IN POUNDS

⑧ TOTAL ACCESSORY RESERVE CAPACITY IN POUNDS

⑨ REGION/SPECIAL ORDER CODES

⑩ SUSPENSION, IDENTIFICATION CODES
- (A) AUX./OPT. USAGE CODE (FRONT)
- (B) FRONT SPRING CODE
- (C) AUX./OPT. USAGE CODE (REAR)
- (D) REAR SPRING CODE

⑪ TRANSMISSION CODE

⑫ FRONT AXLE CODE IF SO EQUIPPED

⑬ REAR AXLE CODE

⑭ RADIO CODES

⑮ EXTERNAL BODY TAPE STRIPE CODE

⑯ INTERIOR TRIM, SEAT AND BODY/CAB TYPE

⑰ BRAKE TYPE CODE

⑱ WHEELBASE IN INCHES

⑲ EXTERIOR PAINT CODES (TWO SETS OF FIGURES DESIGNATES TWO-TONE PAINT)

⑳ VEHICLE TYPE

㉑ VEHICLE IDENTIFICATION NUMBER
- (A) WORLD MANUFACTURER IDENTIFIER
- (B) BRAKE SYSTEM AND GROSS VEHICLE WEIGHT RATING (GVWR) CLASS FOR FORD COMPLETED TRUCKS. FOR BUSES AND INCOMPLETE VEHICLES, THE FOURTH DIGIT IDENTIFIES ONLY THE BRAKE SYSTEM.
- (C) MODEL OR LINE, SERIES, CHASSIS, CAB OR BODY TYPE
- (D) ENGINE TYPE
- (E) CHECK DIGIT
- (F) MODEL YEAR (FORD-COMPLETE TRUCKS AND MPVs)
- (G) ASSEMBLY PLANT CODE
- (H) SEQUENCE NUMBER

㉒ FRONT TIRE COLD PSI

㉓ RIM SIZE

㉔ FRONT TIRE SIZE

㉕ FRONT GROSS AXLE WEIGHT RATINGS IN POUNDS (LB) AND KILOGRAMS (KG)

㉖ DATE OF MANUFACTURE

DY0031-B

Official Licensed Product Ford Motor Company

VEHICLE IDENTIFICATION NUMBER

World Manufacturer Identifier

VIN POSITIONS 1, 2 AND 3

1FT H F25 H 5 V L A00001

VIN CODE	MANUFACTURER	MAKE	TYPE
1FT	FORD MOTOR COMPANY, USA	FORD	TRUCK (COMPLETED VEHICLE)
1FD	FORD MOTOR COMPANY, USA	FORD	INCOMPLETE VEHICLE (IV)
1FC	FORD MOTOR COMPANY, USA	FORD	BASIC (STRIPPED) CHASSIS
1FB	FORD MOTOR COMPANY, USA	FORD	BUS
1FF	FORD MOTOR COMPANY, USA	FORD	MOTOR VEHICLE EQUIPMENT WITHOUT ENGINE/POWERTRAIN (GLIDER)
2FT	FORD MOTOR COMPANY OF CANADA, LTD.	FORD	TRUCK (COMPLETED VEHICLE)
2FD	FORD MOTOR COMPANY OF CANADA, LTD.	FORD	INCOMPLETE VEHICLE
2FC	FORD MOTOR COMPANY OF CANADA, LTD.	FORD	BASIC (STRIPPED) CHASSIS
2FB	FORD MOTOR COMPANY OF CANADA, LTD	FORD	BUS
2FF	FORD MOTOR COMPANY OF CANADA, LTD.	FORD	MOTOR VEHICLE EQUIPMENT WITHOUT ENGINE/POWERTRAIN (GLIDER)
3FC	FORD MOTOR COMPANY OF MEXICO	FORD	BASIC (STRIPPED) CHASSIS
3FB	FORD MOTOR COMPANY OF MEXICO	FORD	BUS
3FE	FORD MOTOR COMPANY OF MEXICO	FORD	INCOMPLETE VEHICLE
3FT	FORD MOTOR COMPANY OF MEXICO	FORD	TRUCK (COMPLETED VEHICLE)

Official Licensed Product
Ford Motor Company

DY0032-A

Brake System and GVWR Class

VIN POSITION 4

1FT H F25 H 5 V L A00001

VIN CODE	BRAKE SYSTEM	GVWR CLASS	GVWR RANGE
H	HYDRAULIC	CLASS G	8,501 — 9,000 POUNDS
J	HYDRAULIC	CLASS H	9,001 — 10,000 POUNDS
K	HYDRAULIC	CLASS 3	10,001 — 14,000 POUNDS
L	HYDRAULIC	CLASS 4	14,001 — 16,000 POUNDS
M	HYDRAULIC	CLASS 5	16,001 — 19,500 POUNDS

DY0033-A

VEHICLE IDENTIFICATION NUMBER (Continued)

Model or Line, Series, Chassis, Cab or Body Type

VIN POSITIONS 5, 6 AND 7

1FT H [F25] H 5 V L A00001

REGULAR CAB	SUPER CAB OR CREW CAB		XL			
F25	X25	F-SERIES	F250HD	4x2	PICKUP — REGULAR CAB/SUPER CAB	TRUCK
F26	X26	F-SERIES	F250HD	4x4	PICKUP — REGULAR CAB/SUPER CAB	TRUCK
—	W25	F-SERIES	F250HD	4x2	PICKUP — CREW CAB*	
—	W26	F-SERIES	F250HD	4x4	PICKUP — CREW CAB*	
F35	X35/W35	F-SERIES	F350	4x2	PICKUP — REGULAR CAB/SUPER CAB/ CREW CAB	TRUCK
F37	—	F-SERIES	F350	4x2	REGULAR CAB (CHASSIS CAB)	IV
F36	W36	F-SERIES	F350	4x4	PICKUP — REGULAR CAB/CREW CAB	TRUCK
F38	—	F-SERIES	F350	4x4	REGULAR CAB (CHASSIS CAB)	IV
F47	—	F-SERIES	F-SUPER DUTY	4x2	REGULAR CAB (CHASSIS CAB)	IV
F53	—	F-SERIES	F-SUPER DUTY	4x2	MOTOR HOME STRIPPED CHASSIS	IV

* PICKUP BOX DELETE AVAILABLE
NOTE: IV MEANS INCOMPLETE VEHICLE.
NOTE: ONE OF THE FOLLOWING OPTIONAL EXTERIOR NAMEPLATES (INDICATING HIGHER TRIM LEVELS) MAY ALSO BE AFFIXED TO THE VEHICLE IN ADDITION TO THE F-SERIES NAMEPLATES:
• XL • XLT • 4x4
NOTE: SPECIAL ORDER (DSO) UNITS WILL BE CODED WITH THE APPROPRIATE SERIES VIN CODES LISTED ABOVE.

Official Licensed Product
Ford Motor Company

DY0034-A

Engine Type, Displacement, Cylinders, Fuel and Manufacturer

VIN POSITION 8

1FT H F25 [H] 5 V L A00001

VIN CODE	DISPLACEMENT		CYLINDERS	FUEL	MANUFACTURER
	LITER	CID			
Y	4.9	300	I-6	GASOLINE	FORD
H	5.8	351	V-8	GASOLINE	FORD
G	7.5	460	V-8	GASOLINE	FORD
F	7.3 DI TURBO	445	V-8	DIESEL	NAVISTAR
Z	4.9	300	I-6	NATURAL GAS	FORD

DY0035-A

VEHICLE IDENTIFICATION NUMBER (Continued)

Check Digit for All Vehicles

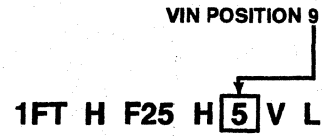

DY0036-A

Vehicle Model Year

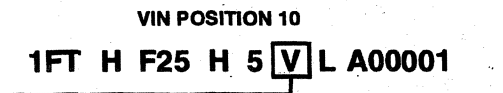

VIN CODE	YEAR
V	1997
W	1998
X	1999
Y	2000
1	2001
2	2002
3	2003
4	2004
5	2005

DY0037-A

Assembly Plant Codes

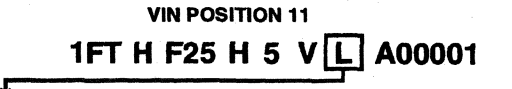

VIN CODE	VEHICLE ASSEMBLY PLANT NAME AND : LOCATION
B	OAKVILLE: OAKVILLE, ONTARIO
C	ONTARIO TRUCK: OAKVILLE, ONTARIO
D	OHIO: AVON LAKE, OHIO
E	KENTUCKY (LIGHT) TRUCK: JEFFERSON, KENTUCKY
H	LORAIN: LORAIN, OHIO
K	KANSAS CITY: CLAYCOMO, MISSOURI
L	MICHIGAN TRUCK: WAYNE, MICHIGAN
N	NORFOLK: NORFOLK, VIRGINIA
P	TWIN CITIES: ST. PAUL, MINNESOTA
T	EDISON: EDISON, NEW JERSEY
U	LOUISVILLE: LOUISVILLE, KENTUCKY
V	KENTUCKY HV (HEAVY) TRUCK: JEFFERSON, KENTUCKY
Z	ST. LOUIS: HAZELWOOD, MISSOURI

DY0038-A

Production Sequence Number

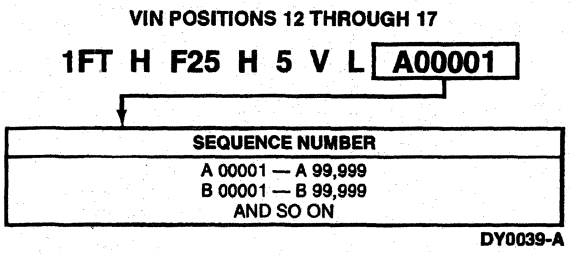

DY0039-A

VEHICLE CERTIFICATION LABEL (VC LABEL) CODES

Vehicle Type Codes

The vehicle data appears on the certification label on the second and third lines following the identification number.

- The code set (two numbers, or several letters, or a number and letter) next to EXT PNT identify the exterior paint color (two sets of codes designate a two-tone).
- The digits under WB designate the wheelbase in inches.
- The letter or digit under BRK designates the truck brake type.
- The letters and numerals under INT TR designate the interior trim, seat and body type.
- The transmission installed in the vehicle is identified under TR by an alphabetical code.
- A letter and a number or two numbers under AXLE identify the rear axle ratio.
- The letters and numerals under TP/PS designate the external body side tape stripe code.
- The radio use codes for the vehicle are identified under R.
- The spring use codes for the vehicle are identified under SPR.

A two-digit number is stamped next to DSO to identify the region that ordered the vehicle. If the vehicle is built to special order (Domestic Special Order, Foreign Special Order, Limited Production Option, or other special order), the complete order number will also appear next to DSO. The following charts illustrate the vehicle codes.

Official Licensed Product Ford Motor Company

VEHICLE CERTIFICATION LABEL (VC LABEL) CODES (Continued)

Exterior Paint Color Codes

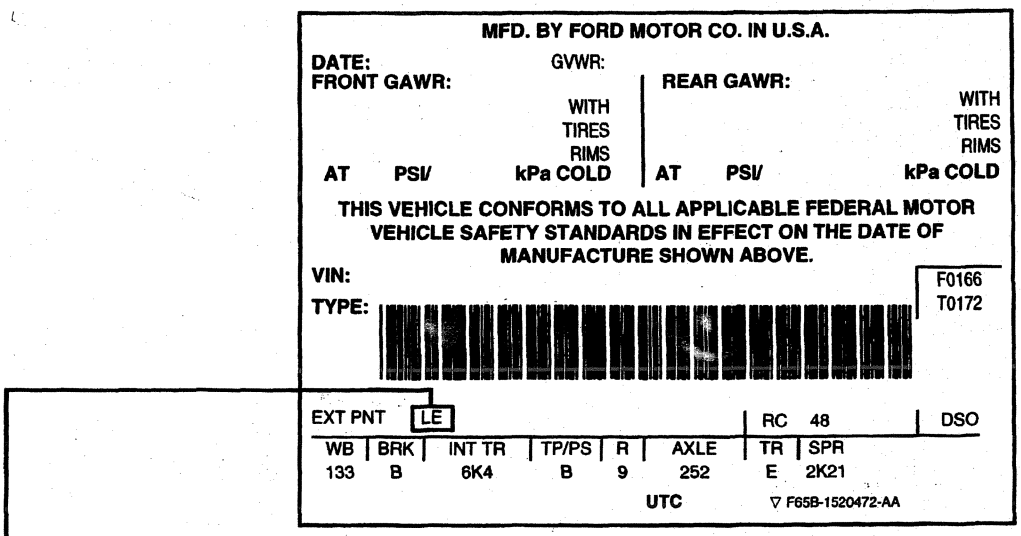

EXTERIOR PAINT COLOR CODES

CODE	COLOR
YC	BLACK
YY	COLONIAL WHITE SOLID
DJ	MEDIUM MOCHA METALLIC
YO	OXFORD WHITE SOLID
PC	REEF BLUE METALLIC
KH	DARK LAPIS METALLIC
UA	EBONY
YZ	OXFORD WHITE CC
EP	VERMILLION SOLID
E4	VERMILLION CC
ZM	COLONIAL WHITE CC
DH	MED LT MOCHA
DY	LT SADDLE CC
DZ	LT SADDLE CC
FL	TOREADOR RED CC
FN	TOREADOR RED CC
JL	DARK TOREADOR CC
KM	ROYAL BLUE CC
KT	INDIGO METALLIC
KU	INDIGO BLUE METALLIC CC
LC	ROYAL BLUE METALLIC
LE	ROYAL BLUE METALLIC CC

CODE	COLOR
NB	DK TOURMALINE METALLIC CC
ND	DK TOURMALINE METALLIC
PS	PACIFIC GREEN C/C
PT	CALYPSO GREEN C/C
SL	LT WILLOW CC
TS	SILVER FROST CC
WD	MED OPAL METALLIC
WE	LT OPAL METALLIC
WO	LT OPAL METALLIC CC
XC	PORTOFINO CC
YN	SILVER METALLIC
Y1	PRIME
ZC	GLACIER WHITE

NOTE — TWO SETS OF CODES INDICATES TWO-TONE PAINT

CODE: CC = CLEAR COAT OVER COLOR PAINT

DY0040-B

VEHICLE CERTIFICATION LABEL (VC LABEL) CODES (Continued)

Interior Trim Type Codes

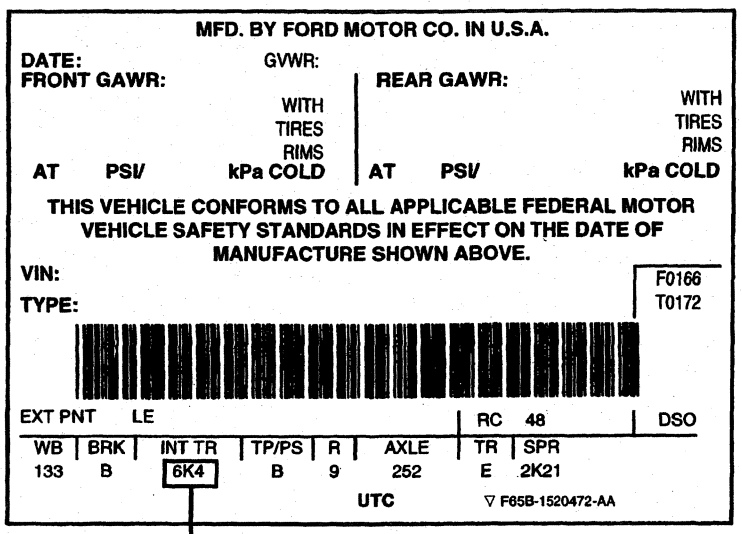

6 K 4

SEATS

CODE	FABRIC	TYPE
6	VINYL	BENCH
7	CLOTH VINYL	BENCH
5	CLOTH	FLIGHT BENCH
8	CLOTH	BENCH
4	CLOTH	CAPTAIN'S CHAIR
V	MONACO	40/20/40
W	—	FLIGHT BENCH
X	—	BRADFORD BENCH
R	PREMIUM CLOTH	40/20/40

CAB/BACK OF CAB

REGULAR	SPECIFICATION
4	STYLESIDE PICKUP
8	CHASSIS CAB
X	STRIPPED CHASSIS (MEXICO)
M	STYLESIDE PICKUP — SUPER CAB
D	STYLESIDE PICKUP — CREW CAB
E	CHASSIS CAB — CREW CAB
P	CHASSIS CAB — SUPER CAB
8	CHASSIS CAB — REGULAR CAB

TRIM COLOR

CODE	COLOR
R	RUBY RED
K	MEDIUM MOCHA
6	MEDIUM OPAL
V	LAPIS

DY0042-B

Official Licensed Product Ford Motor Company

VEHICLE CERTIFICATION LABEL (VC LABEL) CODES (Continued)

Brake Type Codes

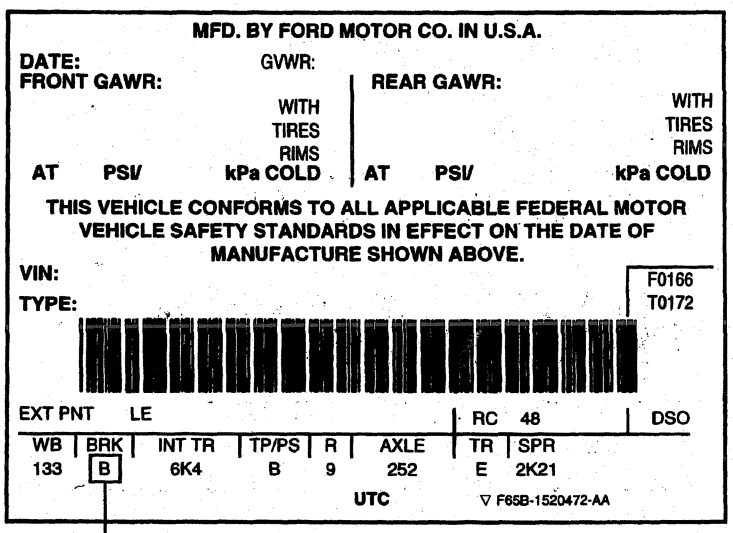

SERIES	BRAKE CODE	BRAKE TYPE
F-250 HEAVY DUTY, F-350	B	FRONT DISC, REAR DRUM WITH 2-WHEEL (REAR) ANTI-LOCK BRAKES
F-SUPER DUTY	1	4-WHEEL DISC BRAKES

Official Licensed Product

DY0041-B

VEHICLE CERTIFICATION LABEL (VC LABEL) CODES (Continued)

Tape Stripe Codes

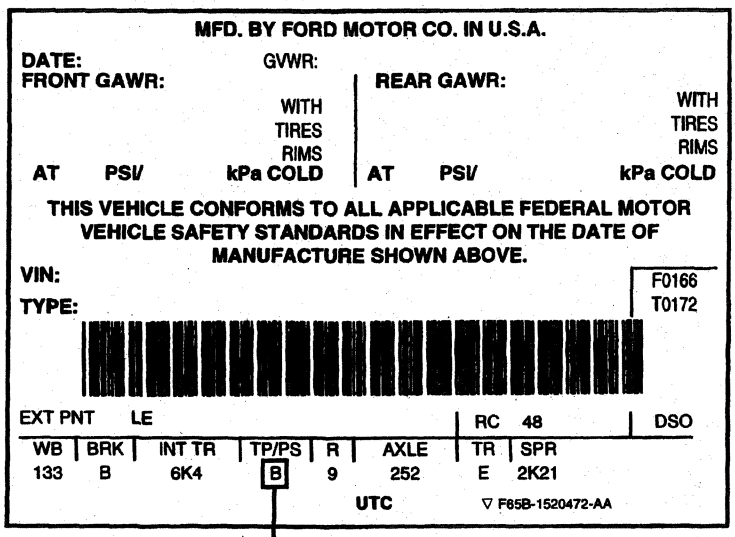

DECALS

CODE	DECAL
F	LT SADDLE/RED (OFF ROAD)
L	SILVER/RED (OFF ROAD)
R	RED (4x4)
S	SILVER (4x4)
T	MEDIUM SADDLE (4x4)
U	LT SADDLE (4x4)
W	BRIGHT RED/SILVER (OFF ROAD)
X	MEDIUM SADDLE/BRIGHT RED (OFF ROAD)

ALL TUTONES STYLESIDE TAPE

CODE	TAPE STRIPE
1	SILVER/WHITE
2	VERMILLION/SILVER
3	TOREADOR/SILVER
4	DK TOREADOR/SILVER
5	PACIFIC GREEN/WHITE
6	PORTOFINO/WHITE
8	LT SADDLE/WHITE
9	LT OPAL/SILVER
A	BLACK/SILVER
B	MED ROYAL BLUE/SILVER
E	ELECTRIC CURRANT RED/SILVER
J	DK TOURMALINE/SILVER
L	LAPIS/SILVER
N	REEF BLUE/SILVER
P	CALYPSO/WHITE
R	INDIGO/WHITE
T	ROYAL BLUE/SILVER
W	TOURMALINE/SILVER
Y	MOCHA/DK MOCHA

DY0043-B

Officially Licensed Reproduction Ford Motor Company

VEHICLE CERTIFICATION LABEL (VC LABEL) CODES (Continued)

Radio Codes

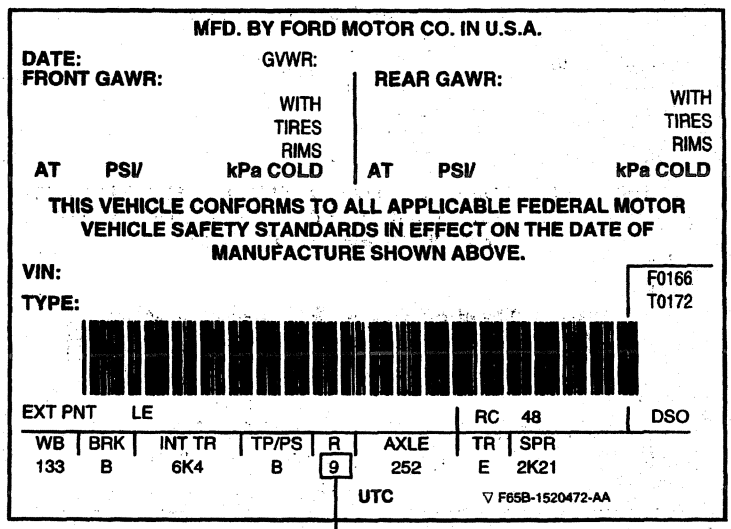

CODE	RADIO TYPE
3	AM RADIO/CLOCK – STANDARD
7	AM/FM STEREO/CLOCK
9	AM/FM CASSETTE/CLOCK
2	ELEC AM/FM DISC PLAYER/CLOCK
Y	DELETE STANDARD AM/CLOCK RADIO

Official Licensed Product

DY0141-A

VEHICLE CERTIFICATION LABEL (VC LABEL) CODES (Continued)

Axle Ratio Codes

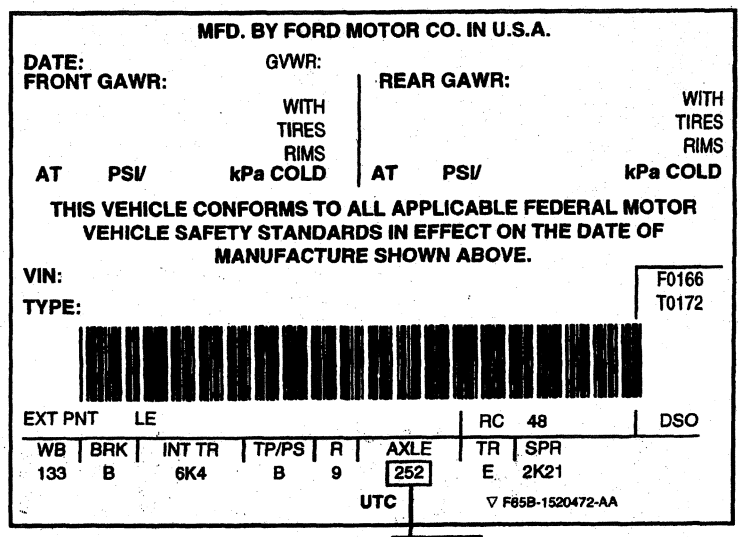

REAR AXLE CODES

CODE	CAPACITY (LBS.)	RATIO
12	3800	2.73
18	3800	3.08
16	3800	3.73
17	3800	3.31
19	3800	3.55
H9	3800	3.55 LS
24	3800	3.54
25	3800	4.10
29	5300	3.55
35	6250	4.10
39	6250	3.55
45	7400	4.10
49	7400	3.55
58	7403	4.88
65	8250	4.10
68	8250	4.88
69	8250	3.55
72	11,000	4.63
73	11,000	5.13

LS = LIMITED SLIP

FRONT AXLE CODE

CODE	DESCRIPTION
2	LIMITED-SLIP

DY0044-B

Ford Motor Company

VEHICLE CERTIFICATION LABEL (VC LABEL) CODES (Continued)

Transmission Codes

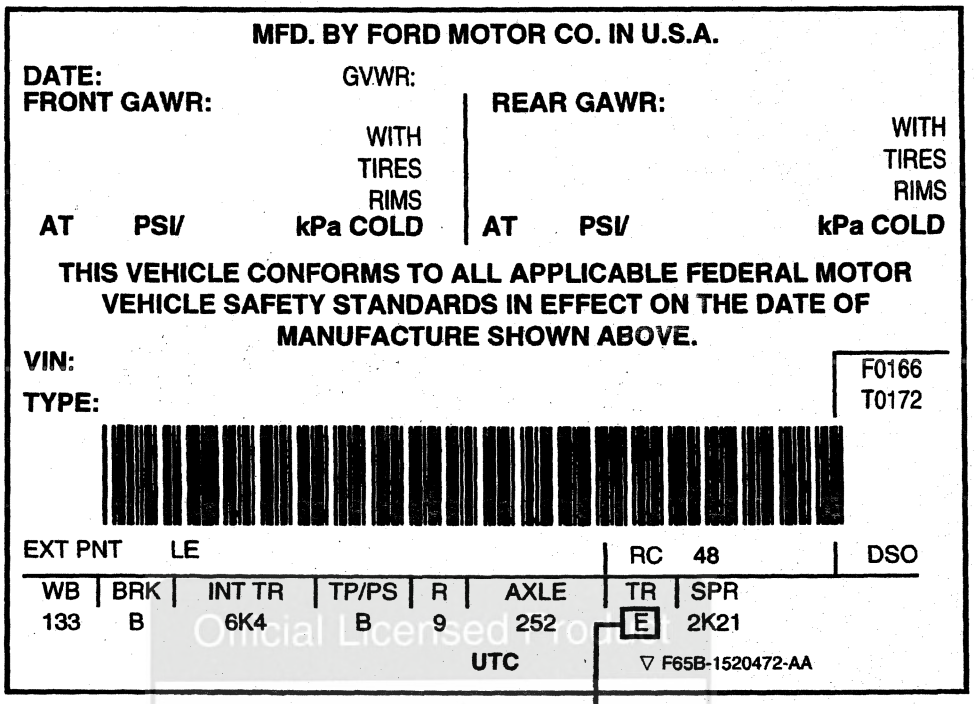

CODE	DESCRIPTION
E	AUTOMATIC — E4OD
W	MANUAL — 5-SPEED H.D. OVERDRIVE (DANA Z-F)

DY0045-B

Official Licensed Product
Ford Motor Company

VEHICLE CERTIFICATION LABEL (VC LABEL) CODES (Continued)

Suspension Spring Codes

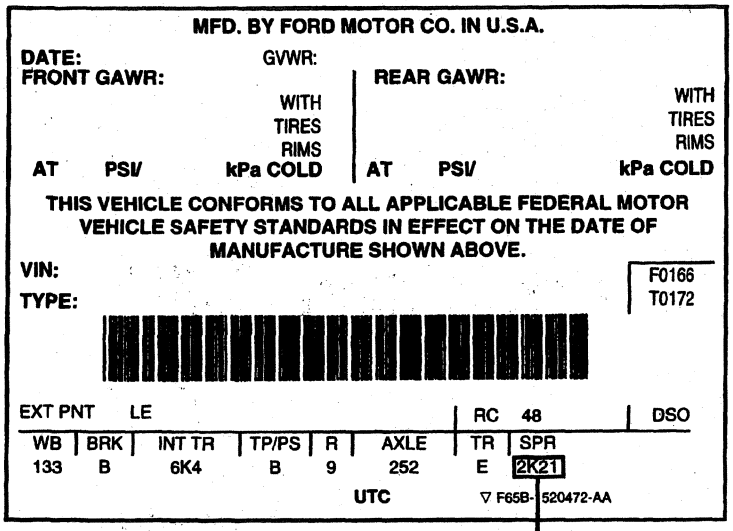

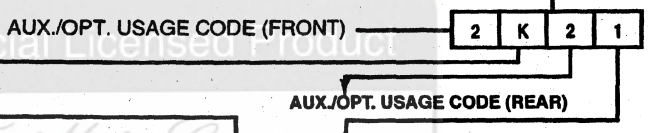

FRONT SPRING CODE

CODE	PART NUMBER
A	F4TY-5310-AA
H	F4TA-5310-HA
J	F4TA-5310-JA
K	F4TA-5310-KA
M	F4TA-5310-MA
N	F4TA-5310-NA
B	F4TA-5310-PA
R	F1TA-5310-ANA
S	F1TA-5310-APA
T	F1TA-5310-ARA
U	F4TA-5310-UA
5	F1TA-5310-AHA
6	F1TA-5310-AJA
7	F1TA-5310-AKA
8	F1TA-5310-AMA
9	F1TA-5310-ALA
1	F4TA-5310-RA
L	F4TA-5310-LA
2	F4TA-5310-SA
3	F4TA-5310-TA
4	F4TA-5310-VA
X	F4TA-5310-XA
Y	F4TA-5310-YB
Q	F5TA-5310-ACA

REAR SPRING CODE

CODE	PART NUMBER
G	F5TA-5560-UA
H	F4TA-5560-MA
K	F4TA-5560-KB
L	F4TA-5560-LB
M	F4TY-5560-AA
N	F4TA-5560-NB
P	F4TA-5560-PB
I	F4TA-5560-JB
A	F4TA-5560-SA
F	F4TA-5560-TA
3	F5TA-5560-UA
9	F2TA-5560-VB
8	F4TA-5A975-AA

DY0046-B

Official Licensed Product Ford Motor Company

VEHICLE CERTIFICATION LABEL (VC LABEL) CODES (Continued)

Region, Special Order and Wheelbase Codes

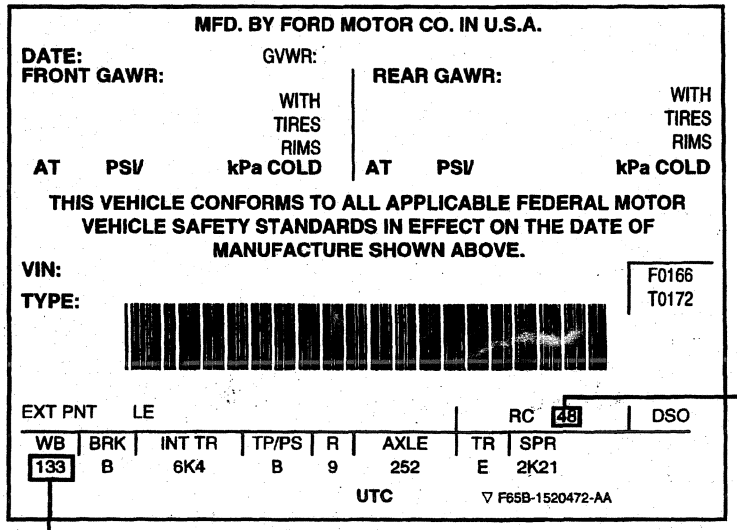

WHEELBASE (INCHES)

F-250 HD F-350	F-SUPER DUTY
133	137
139	161
152	178
155	185
168	190
	208
	228

DSO — FSO — PTO (DOMESTIC, FOREIGN AND SPECIAL ORDER)

THE DSO SPACE WILL SHOW A TWO-DIGIT CODE NUMBER OF THE REGION WHICH ORDERED THE UNIT (SEE CHART BELOW). THIS CODE WILL APPEAR ON ALL UNITS — DOMESTIC OR EXPORT. IF UNIT IS BUILT ON A DSO, FSO, PTO (SPECIAL ORDERS), THE COMPLETE ORDER NUMBER IS UNDER THE DSO SPACER **AFTER** THE DISTRICT CODE NUMBER.

CODE	REGION
11	BOSTON
13	NEW YORK
16	PHILADELPHIA
21	ATLANTA
23	MEMPHIS
24	ORLANDO
27	WASHINGTON
41	CHICAGO
44	PITTSBURGH
47	CINCINNATI
48	DETROIT
52	DALLAS
53	KANSAS CITY
56	DENVER
58	TWIN CITIES
71	LOS ANGELES
72	SAN FRANCISCO
74	SEATTLE
83	GOVERNMENT
84	HOME OFFICE RESERVE (HOR)
85	AMERICAN RED CROSS
86	RECREATION VEHICLE POOL
87	BODY COMPANY
89	TRANSPORTATION SERVICES
9A	EXPORT

FORD OF CANADA

MERCURY REGIONS		FORD REGIONS	
A1	CENTRAL	B1	CENTRAL
A2	EASTERN	B2	EASTERN
A3	ATLANTIC	B3	ATLANTIC
A4	MIDWESTERN	B4	MIDWESTERN
A6	WESTERN	B6	WESTERN
A7	PACIFIC	B7	PACIFIC
A8	GREAT LAKES	B8	GREAT LAKES
I1	EXPORT	I1	EXPORT

DY0047-C

Official Licensed Product

SECTION 00-02 Lifting and Jacking

SUBJECT	PAGE
VEHICLE APPLICATION	00-02-1
HOISTING AND JACKING	
Jack, Floor	00-02-2
Lifting Instructions	00-02-1
Hoist, Drive-On	00-02-1
HOISTING AND JACKING (Cont'd.)	
Hoist, Frame Contact	00-02-1
Hoist, Single-Post	00-02-1
Hoist, Twin-Post	00-02-1

VEHICLE APPLICATION

F-250 Heavy Duty, F-350 and F-Super Duty

HOISTING AND JACKING

Lifting Instructions

CAUTION: Damage to suspension or steering linkage components can occur when positioning hoist adapters. Position front adapter pads carefully to ensure maximum contact under the center of the lower suspension arms or spring supports as near to wheels as practical. Place rear suspension hoist adapters (forks) under spring mounting pads or rear axle housing tubes, but do not allow adapters to interfere with shock absorber mounting brackets or stabilizer bar mounting brackets.

NOTE: Improper towing can result in transmission damage. Always follow the towing procedures described in the vehicle owner guide.

Refer to the manufacturer's operating instructions for proper lifting procedures.

Hoist, Drive-On

To prevent possible damage to the underbody, do not drive the vehicle onto the drive-on hoist without first checking for possible interference between the upright flanges of the hoist rails and the underbody. Should there be interference, modify the hoist flanges as necessary or build up the approach ramps to provide the necessary clearance.

Hoist, Frame Contact

Adapters may be necessary to clear vehicle components (front and rear) to lift the vehicle safely. Place wooden blocks between the frame lift contact point and hoist adapter, if necessary. This will provide enough clearance to prevent damaging the lower body.

Hoist, Single-Post

Adapters may be necessary to clear vehicle components (front and rear) to lift the vehicle safely. Place wooden blocks between the frame lift contact point and hoist adapter, if necessary. This will provide enough clearance to prevent damaging the lower body.

Hoist, Twin-Post

CAUTION: Damage to suspension or steering linkage components can occur when positioning hoist adapters. Position front adapter pads carefully to ensure maximum contact under the center of the lower suspension arms or spring supports as near to wheels as practical. Place rear suspension hoist adapters (forks) under spring mounting pads or rear axle housing, but do not allow adapters to interfere with shock absorber mounting brackets or stabilizer bar mounting brackets.

CAUTION: When raising a vehicle on a twin-post hoist, take care to position the vehicle so the hoisting adapters (forks) do not damage the axle housing cover (4033) or contact the rear stabilizer bar (5A772) or brackets.

Adapters may be necessary to clear vehicle components (front and rear) to lift vehicle safely.

HOISTING AND JACKING (Continued)

Jack, Floor

WARNING: TO MINIMIZE THE RISK OF PERSONAL INJURY, DO NOT PUT ANY PORTION OF YOUR BODY UNDER THE VEHICLE WHILE THE VEHICLE IS ON THE JACK. THE JACK IS PROVIDED FOR EMERGENCY WHEEL AND TIRE CHANGING ONLY.

WARNING: NEVER RUN THE ENGINE WITH ONE WHEEL OFF THE GROUND, SUCH AS WHEN CHANGING A TIRE. THE WHEELS STILL ON THE GROUND CAN CAUSE THE VEHICLE TO MOVE.

CAUTION: On vehicles equipped with an under-chassis mounted spare tire, remove the tire, wheel or tire carrier from the vehicle before it is placed in a high lift position in order to avoid sudden weight release from the chassis.

CAUTION: Do not use the differential housing as a lift point. Leaks or damage to the rear axle cover and adjoining differential housing surface can occur if a floor jack or any lifting device is allowed to contact the cover at any point where the cover joins the housing.

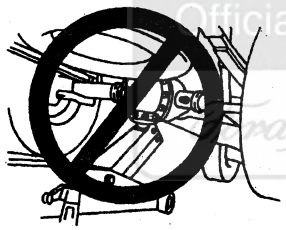

NEVER USE THE DIFFERENTIAL HOUSING AS A LIFT POINT

Y5773-A

When lifting a vehicle with the vehicle jack or any floor jack, block the diagonally opposite wheel to prevent vehicle from moving.

To raise heavy vehicles with floor jacks, follow the jack manufacturer's recommendations for placement of jack. Do not exceed the rated lift capacity of any jack.

Primary Front Axle Jacking Point, F-250 Heavy Duty and F-350 (4x2)

To raise front wheels, position jack under front center of axle and slide jack outboard toward wheel to be lifted.

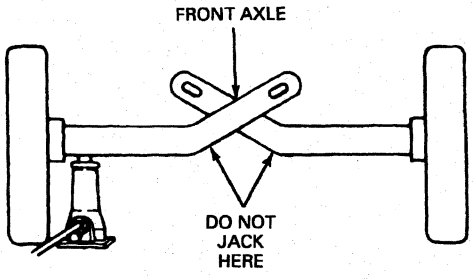

Y5226-A

Alternate Front Axle Jacking Point, F-250 Heavy Duty and F-350 (4x2)

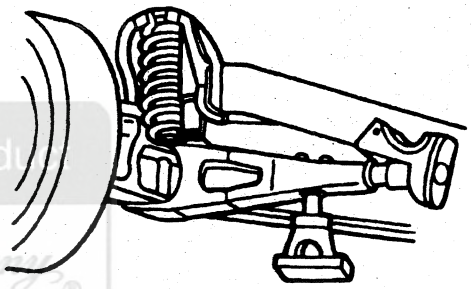

Y5227-A

Front Axle Jacking Point, F-250 Heavy Duty (4x4)

To raise front wheel, place jack in position from front of vehicle under axle.

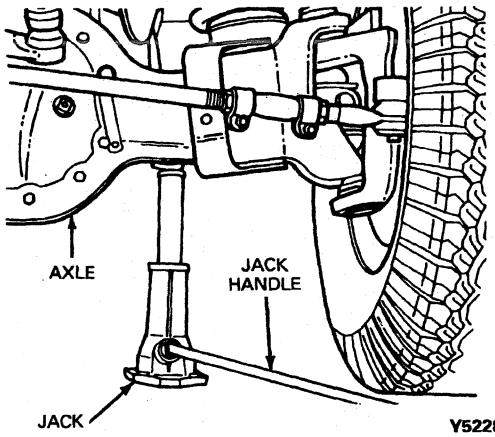

Y5228-A

Official Licensed Product Ford Motor Company

HOISTING AND JACKING (Continued)

Front Axle Jacking Point, F-350 (4x4)

To raise front wheel, place jack in position from front of vehicle under axle.

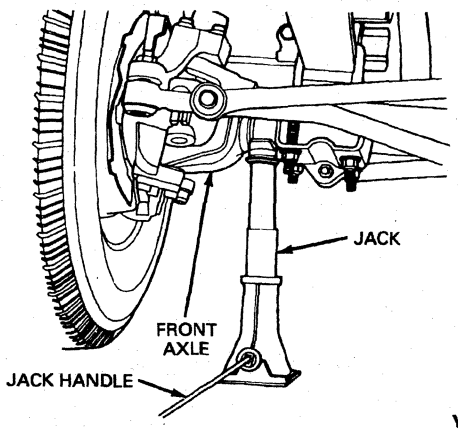

Y5229-A

Front Axle Jacking Point, F-Super Duty

To raise front wheels, position jack under bracket, in front of axle.

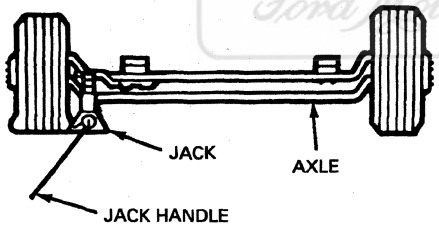

Y5230-A

Rear Axle Jacking Point, All Except F-Super Duty

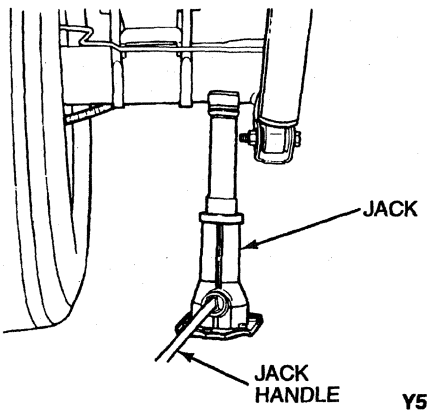

Y5233-B

Rear Axle Jacking Point, F-Super Duty

WARNING: ON F-SUPER DUTY VEHICLES, THE PARKING BRAKE IS ON THE TRANSMISSION. THEREFORE, THE VEHICLE WILL NOT BE PREVENTED FROM MOVING WHEN A REAR WHEEL IS LIFTED, EVEN IF THE VEHICLE IS IN PARK AND THE PARKING BRAKE IS APPLIED. BE SURE TO BLOCK BOTH DIRECTIONS OF THE WHEEL THAT IS DIAGONALLY OPPOSITE TO THE WHEEL THAT IS BEING LIFTED.

To raise rear wheels, position jack under axle, against inside edge of spring bracket.

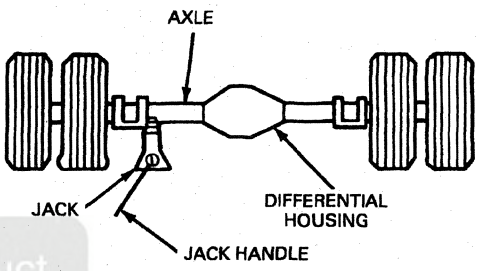

Y5231-A

Official Licensed Product
Ford Motor Company

SECTION 00-04 Noise, Vibration and Harshness

SUBJECT	PAGE
VEHICLE APPLICATION	00-04-1
DESCRIPTION AND OPERATION	
Diagnostic Theory	00-04-2
Be Positive the Cause Is Found	00-04-2
Diagnosis Charts	00-04-2
Do Not Cure the Symptom and Leave the Cause	00-04-2
Know the History of the Condition	00-04-2
Know the History of the System	00-04-2
Know the Probability of Certain Conditions Developing	00-04-2
Know the System	00-04-2
Noise, Vibration and Harshness (NVH)	00-04-1
DIAGNOSIS AND TESTING	
Noise, Vibration and Harshness	00-04-2
Components Tests	00-04-25
Analysis of Gear Noise	00-04-26
Axle Pitch Line Runout/Boom	00-04-25
Hub Bearing, Rear	00-04-26

SUBJECT	PAGE
DIAGNOSIS AND TESTING (Cont'd.)	
Noise or Vibration, 4-Wheel Drive Vehicles	00-04-25
Inspection and Verification	00-04-2
Pinpoint Tests	00-04-12
Symptom Charts	00-04-9
GLOSSARY OF TERMS	
Terms	00-04-28
ADJUSTMENTS	
Balancing, Brake Drum	00-04-30
Balancing, Driveshaft	00-04-31
Match Mounting Tires	00-04-31
Wheels, Distorted	00-04-31
SERVICE PROCEDURES	
Engine/Transmission Mounts, Neutralizing	00-04-32
Exhaust System, Neutralizing	00-04-32
SPECIAL SERVICE TOOLS /EQUIPMENT	00-04-32

VEHICLE APPLICATION

F-250 Heavy Duty, F-350 and F-Super Duty

Official Licensed Product
Ford Motor Company

DESCRIPTION AND OPERATION

Noise, Vibration and Harshness (NVH)

The information in this section will provide a working knowledge of the process required to diagnose noise, vibration and harshness (NVH) conditions. Before attempting to diagnose an NVH condition, read the Diagnostic Theory in the Description and Operation portion of this section and the Glossary of Terms in this section.

Once familiar with the methods and terms used in NVH diagnosis, review the diagnostic procedures. The most important part of diagnosis is the road test, in which a wide range of NVH conditions can be defined and narrowed to a specific area of the vehicle.

With the type of condition known, the diagnostic procedures should be used to diagnose a specific component. After making any repair, always road test the vehicle to confirm that the condition has been corrected to the owner's satisfaction.

Noise, defined as any unpleasant sound, can be described in a variety of ways, such as tapping, whistling, buzzing, humming, clunking or booming.

- All noises can be associated with a probable cause. Based on experience, these descriptions will assist in isolating the condition and correcting it.
- Generally recognizable concern areas are engine, driveline, wind and road surface noises.
- Other less obvious areas that should be considered as noise concern sources are any of the conditions that cause the vibrations described in this section.

A gear driven mechanism, such as the transmission or a drive axle, will produce a certain amount of noise.

- Some noise is acceptable and may be audible at certain speeds or under various driving conditions, for example, tire noise on a newly paved blacktop road.
- Limited slip axles can produce a slight chatter or groan on slow turns after extended highway driving, which is normal.
- Noise from the transfer case in four-wheel drive may be the result of transfer case chain noise. This noise can take the form of a high or low frequency whine or growl, and is normal in four-wheel drive vehicles. The noise is most pronounced when driving on hard surfaced roads in four-wheel drive and is due to driveline binding between the front and rear axles causing the chain to contact the front and rear of the sprocket teeth, depending on whether the vehicle is accelerating or coasting.
- In addition, noise may be present in two-wheel drive with the manual hubs in the LOCK position or with the automatic locking hubs engaged, but to a lesser degree.
- Such noises are in no way detrimental to the operation of the vehicle and must be considered normal.
- It is important that the rear axle noise on vehicles equipped with the automatic overdrive transmission be evaluated in both drive and overdrive.

DESCRIPTION AND OPERATION (Continued)

Diagnostic Theory

Diagnosis is more than just following a series of interrelated steps in order to find the solution to a specific condition. It is a way of looking at systems that are not functioning the way they should and finding out why. Also, it is knowing how the system should work and whether it is working correctly.

There are basic rules for diagnosis. If these rules are followed, the cause of the condition is usually found the first time through the system.

Know the System

Sometimes this means checking the system against one that is known to be working properly.

- Know how the parts go together.
- Know how the system operates and its limits, and what happens when something goes wrong.

Know the History of the System

A clue in any one of the following areas can save time.

- How old or new is the system?
- What kind of treatment has it had?
- Has it been serviced in the past in such a manner that might relate to the present condition?
- What is the service history?

Know the History of the Condition

Know how the condition made itself known; it can be an important clue to the cause.

- Did it start suddenly or did it appear gradually?
- Was it related to some other occurrence like an accident or previous part replacement?

Know the Probability of Certain Conditions Developing

It is true that most conditions are caused by simple things rather than by complex ones and they occur in a fairly predictable pattern. Electrical conditions, for instance, usually occur at connections rather than in components. An engine no-start is more likely to be caused by a loose wire or some component out of adjustment than a sheared-off camshaft. Know the difference between impossible and improbable. Many good technicians have spent hours diagnosing a system thinking certain failures were impossible, only to find out that the failures were just improbable and actually happened. Remember to verify that new parts are functioning properly.

Do Not Cure the Symptom and Leave the Cause

Lowering the air pressure in a front tire can correct the condition of a vehicle leaning to one side, but it does not correct the cause of the condition.

Be Positive the Cause Is Found

Double-check findings. If a worn component is found or something is out of adjustment, determine what else could be wrong. If one of the engine mounts was loose, could the other one be loose too? What about the transmission mounts?

Diagnosis Charts

Charts are simply a way of expressing the relationship between basic logic and a physical system of components. They help corner the cause of a condition in the shortest possible amount of time. Diagnosis charts combine many areas of diagnosis into one visual display:

- probability of certain things occurring in a system
- speed of checking certain components or functions before others
- simplicity of performing certain tests before others
- elimination of checking huge portions of a system by performing simple tests
- certainty of narrowing down the search to a small portion before performing in-depth testing

The fastest way to find a condition is to work with the tools that are available, which means working with proven diagnosis charts and the proper special equipment for the system.

DIAGNOSIS AND TESTING

Noise, Vibration and Harshness

Inspection and Verification

Consideration of noise, vibration and harshness (NVH) is becoming more and more important because vehicles are becoming more sensitive to these factors. This section is designed to give a working knowledge of the process of diagnosing noise and vibration. It is divided into several sections based on the description of the condition.

The Road Test procedure in the Diagnosis and Testing portion of this section will tell how to sort the conditions into categories and how to distinguish a vibration from a shake. It will give a few hints on quick checks to make sure that a cause is either pinpointed or eliminated.

How to Use this Diagnostic Procedure Section

Begin with the customer interview. Use the Glossary of Terms in this section to find the descriptive name of conditions not encountered before. After naming it, proceed to identifying the condition and locate the proper diagnosis. Remember, just by beginning at that point, most other systems in the vehicle have been eliminated. When the proper method of diagnosis is identified, the job is partly done. Follow the steps within the diagnostic procedure. Quick checks are described within the step, while more involved tests and adjustments are found in the Adjustments and Service Procedures portions of this section. Always follow each step exactly, and make notes along the way to recall important findings later.

Unlicensed Product Not for Sale

DIAGNOSIS AND TESTING (Continued)

Customer Interview

It is important to interview the customer. Customer feedback can supply information that could be helpful in diagnosing the concern. Ask questions like:

- When is the concern present (at idle or while driving)?
- Where does the concern appear to be coming from?
- How long has the concern existed? Has it become steadily worse?
- When did the concern start?

Identifying the Condition

Noise, vibration and harshness (NVH) usually occur in the following four areas:

- tires
- engine accessories
- suspension
- driveline

It is important, therefore, that an NVH problem be isolated to its specific area as soon as possible. The easiest and quickest way to do this is to perform a road test. If necessary, refer to the Road Test procedure in the Diagnosis and Testing portion of this section.

Noise Diagnostic Procedure

Non-Axle Noise

There are some noise conditions that can sound just like axle noise and have to be considered while performing road test diagnosis. The five most common sources of noise are the transmission, exhaust system, tires, roof racks and trim mouldings.

Make sure none of these non-axle noise conditions are the cause of the noise concern before proceeding with an axle teardown and diagnosis.

Noise Conditions

If noise is produced as part of a vibration condition, correcting the vibration will eliminate the noise. If the noise is related to a specific component or system, refer to the appropriate service manual section for further diagnosis.

Vibration Conditions

Vibration, technically, is a high-frequency trembling, shaking or grounding condition, felt or heard, that is constant or variable in level and occurs during a portion of the total operating speed range. The types of vibrations that can be felt in the vehicle can be divided into three groups:

- vibrations of various unbalanced rotating parts of the vehicle
- body and frame vibrations excited by powertrain, wind or road inputs
- tip-in moans or resonance vibrations from stressed engine or exhaust system mounts or driveline flexing modes

Vehicle vibrations can also be subdivided into those that occur at low speeds and those that are most noticeable at higher speeds. Since the dividing line between low and higher speed vibrations is not clear, there will be vibrations that overlap the two ranges.

Typical Low-Speed Vibrations (Less Than 72 km/h [45 mph])

- exhaust vibration
- engine harshness
- driveline vibration due to improper driveline angles
- power steering pump disturbances
- air conditioner compressor or drive belt (8620) vibrations
- take-off shudder (driveline problems)
- brake roughness or harshness
- driveline roughness
- driveline slip-yoke or rear axle universal joint flange (4851), automatic or manual transmission clutch slippage

Typical High-Speed Vibrations (Above 72 km/h [45 mph])

- rear axle universal joint flange runout or imbalance
- driveshaft (4602) imbalance
- excessive tire-wheel and drum assembly imbalance
- tire roughness due to high non-uniformity (force variation) or out-of-balance condition
- rear axle pinion gear pitch line runout
- excessive tire and wheel runout
- worn suspension components
- front end accessory vibrations
- exhaust vibration (greatly reduced in exhaust systems de-coupled by a flexible coupling and mounted with blade and block hangers)

Harshness Conditions

Harshness is the term commonly used to describe the ride quality concern of the vehicle. A hard ride or harshness is usually caused by the tires or suspension system, namely:

- overinflated, wrong size or wrong type tire installed on the vehicle
- suspension not sufficiently lubricated
- worn suspension components
- suspension components installed with preload on pivot point, bearings and bushings
- vehicles equipped with tires not specified by the manufacturer (different brand tires often give different ride qualities to the vehicle)
- bent or bound-up shock absorbers
- heavy-duty components installed on vehicle

Ford Motor Company

DIAGNOSIS AND TESTING (Continued)

Other harshness conditions that affect ride quality can be summarized as follows:

- Vehicle bounce — the vertical motion of a vehicle on its suspension system, front and rear in phase, a low frequency "float" or an intermediate frequency "kick."
- Vehicle pitch — the out-of-phase vertical motion of the front and rear of the vehicle. A flat ride would be considered the opposite of a pitch ride.
- Vehicle roll — the side-to-side rotation of the vehicle body about the front and rear axles.

Leakage Conditions/Low Lube Level

Most rear axle lubricant leakage conditions can be corrected without a teardown. However, it is important to clean up the leaking area enough to identify the exact source.

NOTE: If vent cannot be cleared, it must be replaced.

A plugged axle vent will cause excessive seal lip wear due to internal pressure buildup. When a leak occurs, check the vent located near the top of the differential housing. Make sure the vent hose is not kinked. Remove the vent hose from the vent nipple and make sure the hose is clear of dirt or other foreign materials. While hose is removed, pass a length of mechanics' wire or small diameter Allen wrench in and out of the vent nipple to clean it of any dirt or foreign materials. Install vent hose.

Make sure axle lubricant is to specified level. Refer to appropriate section in Group 05 in the Powertrain, Drivetrain Manual.

Road Test

NVH diagnosis should always start with the road test.

Noise, vibration and harshness (NVH) usually occurs in four areas: tires, engine accessories, suspension or powertrain. It is important, therefore, that an NVH concern be isolated into its specific area as soon as possible. The easiest and quickest way to do this is to perform a road test.

NVH Diagnostic Locator

Official Licensed Product
Ford Motor Company

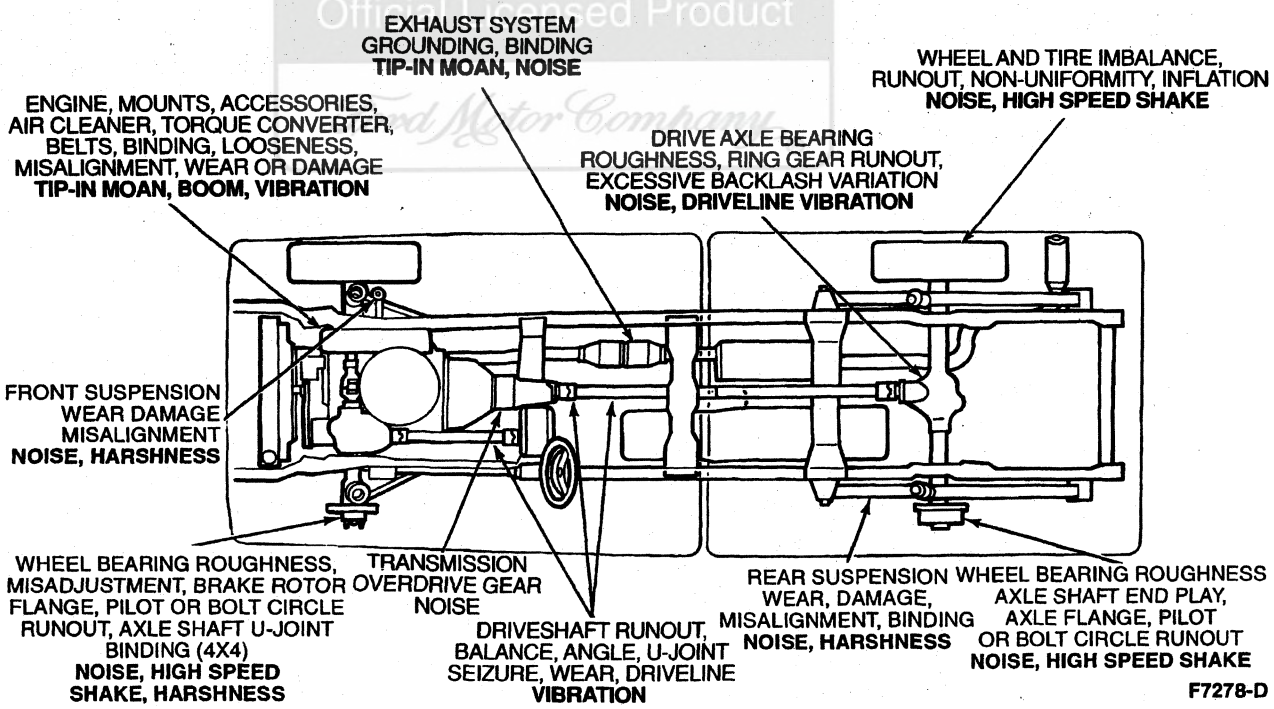

A gear-driven unit will produce a certain amount of noise. Some noise is acceptable and may be audible at certain speeds or under various driving conditions. The slight noise is in no way detrimental and must be considered normal.

1. Make notes throughout diagnostic routine. It will help cover all bases when starting to add up clues. Use a road test form that includes space for comments. Write down even the smallest bit of information, as it may turn out to be most important.
2. Road test the vehicle, and define the condition by reproducing it several times during the road test.

DIAGNOSIS AND TESTING (Continued)

3. Perform the road test quick checks as soon as the condition is reproduced. This will identify the appropriate diagnostic procedure. Run through the quick checks more than once to make sure they are getting a usable result. Remember, the road test quick checks may not tell where the concern is, but they will tell where it is not.
4. Make a visual inspection as part of the preliminary diagnostic routine, writing down anything that does not look right. Note tire pressures, leaking fluids, loose nuts and/or bolts, or bright spots where components may be rubbing against each other. Check cargo area for unusual loads.

Some hints on performing a road test for the diagnosis of NVH complaints follow.

Neutral Engine Run-Up Test (NERU)

A very useful first step in the road test is a neutral engine run-up (NERU) test. It identifies engine related vibrations and helps in sorting out vibrations that are found in the road test.

This test takes only a minute or two and represents time well spent in testing.

If the vehicle is equipped with a tachometer, it can be used. Otherwise, a tach should be connected. A tach is absolutely necessary in both the NERU test and the road test.

5. Locate the vehicle away from other vehicles and walls which may reflect sound differently than a road reflects sound.
6. Put the vehicle in N (neutral) or P (park) and do not set the parking brake or press on the service brake since these are not engaged in a road test. Pressing on the service brake puts forces into the brake and clutch pedal support and into the dash panel that are not present in driving. A similar situation arises with the parking brake.
7. Run the engine up from idle to approximately 4000 rpm and note any moans, vibrations, noises, etc., and the rpm at which they occur. Sometimes it is possible to "tune in" on these by running up and down in rpm to determine a precise rpm at which they occur; in other cases they will fall over a broad range of rpm. This establishes a baseline against which driving vibrations can be measured.
8. If you suspect that the exhaust system is vibrating, hang a ring of keys or something similar from the tailpipe and listen for the rattling of the keys as the engine is run up and down. Sometimes it is very clear with just this simple test that the exhaust system is responsible.

   Some exhaust systems contain flexible couplings and may not require evaluation unless the exhaust system is damaged.
9. If you suspect the air conditioning system or drive belt, turn on the air conditioning system before performing the NERU test. If a noise occurs at a specific rpm, turn the air conditioning system off and on to see if the noise is connected to the air conditioning compressor or A/C system lines.
10. Results of the NERU test should be compared with the results of the road test to sort out vibrations and noises caused by the engine from those caused by the transmission, driveshaft or axle. If, during the road test, a vibration or noise occurs at a particular speed, try operating in another gear at the same speed. This changes the engine rpm and helps to sort out engine induced vibrations and noises. If it occurs at a particular rpm, use different gears to test at the same rpm at different road speeds. Turn the air conditioning system off and on at road speeds where noise occurs to isolate air conditioning system problems.

Drive Engine Run-Up Test (DERU)

The following worksheet is invaluable for recording customer comments as well as inspection and road test data.

11. **CAUTION: Do not conduct this test for over 30 seconds, or without periodic driving or shifting to neutral to circulate transmission lubricant, otherwise, the transmission will overheat causing severe damage to the automatic transmission.**

    Set both the parking brake and service brake and take care to perform the test with enough space ahead of the vehicle to eliminate the possibility of an accident should the vehicle unintentionally lurch forward.
12. Put the transmission in D (drive) and run the engine up and down between idle and approximately 2000 rpm. Note the nature of any vibrations and noises and when these concerns occur in relation to engine rpm. This test is particularly good for examination of the exhaust system, and hanging keys on the tailpipe can serve as a "telltale" indicator.

DIAGNOSIS AND TESTING (Continued)

Road Test Form

NVH WORKSHEET

Dealer: _____ Date: _____
P.A. Code: _____ Order No. _____ Technician: _____
Owner's Name: _____ Address: _____
Phone: H) _____ W) _____
Vehicle Make: _____ Year: _____ Model: _____
VIN: _____ Mileage: _____ Engine: _____ Trans: _____ Axle: _____

OWNER'S DESCRIPTION OF COMPLAINT:
Did Condition Exist When Vehicle Was New? **Y / N**
How Did Condition Begin? ☐ Gradually Mileage _____
☐ Suddenly Mileage _____
Which Driving Conditions Affect The Vehicle? ☐ Light to Medium Accel ☐ Heavy Accel ☐ Brakes Applied/ Released?
☐ Decel (foot off acc. pedal) ☐ Const. Speed
Where Is The Vibration Noticed? ☐ Seat ☐ Steering Wheel ☐ Inst. Panel ☐ Floor ☐ Fenders
Is There A Sound Or Sensation Of Sound? **Y / N**
If Yes, Describe It: ☐ Boom ☐ Drone ☐ Hum ☐ Tip-In Moan ☐ Whining
Further Descriptions: _____

PRELIMINARY INSPECTION:
Tire Size: Front: _____ Tire Mfg: _____
Rear: _____ Tire Mfg: _____
Tire Pressure: LF: _____ RF: _____ LR: _____ RR: _____
Tire Condition: LF: _____ RF: _____ LR: _____ RR: _____
Body Damage Evident? **Y / N**
If Yes, Where? _____

ROAD TEST:
Vibration Occurs At _____ To _____ MPH, At _____ RPM
Vibration Occurrence
☐ Vibration occurs in drive only/not neutral (not wheel-end related).
☐ Vibration occurs in both drive and neutral position. Vibration is driveline related or wheel-end related.
NOTE: If vibration does not occur while in neutral coast, vibration is not caused by wheel/tire/rotor or brake drum or other balanced component.
Indicates: ☐ Tire/Wheel/Brakes ☐ Pinion Angle ☐ Driveshaft
☐ Tip-In Moan ☐ Engine/Acc. ☐ Other
If "Other", Specify: _____

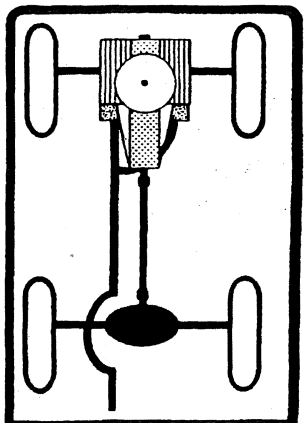

RECORD TIRE PRESSURE, WEAR, AND ANY OTHER POTENTIAL PROBLEM AREAS DIRECTLY ON THE DRAWING.

WHEEL/TIRE/BRAKES CHECK:
Max. Runout Allowed Tire/Wheel _____" Radial _____" Lateral
Wheel Only: _____" Radial _____" Lateral

Runouts Measured:		LF	RF	LR	RR
Tire and Wheel:	Radial/	_____"	_____"	_____"	_____"
	Lateral/	_____"	_____"	_____"	_____"
Wheel Only:	Radial/	_____"	_____"	_____"	_____"
	Lateral/	_____"	_____"	_____"	_____"

Brake Components: Runout OK? **Y / N**
ROAD TEST: Improved? **Y / N** Vehicle Acceptable? **Y / N**
COMMENTS: _____

F7558-B

Official Licensed Product Ford Motor Company®

DIAGNOSIS AND TESTING (Continued)

Road Test Form (Continued)

DRIVESHAFT BALANCE:
Maximum Runout Allowed: _____" Runouts Measured **Front** _____"
Middle _____" **Rear** _____"
Reindex Driveshaft? **Y/N** Balance Driveshaft? **Y/N**
Other Repairs Performed: _____

ROAD TEST: Improved? **Y/N** Vehicle Acceptable? **Y/N**

PINION ANGLE:	**Spec**	**Actual**	**Repair Performed**
Ride Height:	_____	_____	_____
Pinion Angle:	_____	_____	_____

ROAD TEST: Improved? **Y/N** Vehicle Acceptable? **Y/N**

Neutral Run-up Test: Vibration Evident? **Y/N** If Yes: _____ To _____ RPM.

ENGINE ACCESSORY CHECK:
Visual Inspection/Comments: _____

Component Isolation:	**Belt Removed**	**Result**
	_____	_____
	_____	_____
	_____	_____
	_____	_____
A/C Compressor:	**Turn ON/OFF**	_____
A/C Lines:	**Check for Ground-outs**	_____
	_____	_____

Other Repairs Performed: _____

ROAD TEST: Improved? **Y/N** Vehicle Acceptable? **Y/N**

TIP-IN-MOAN CHECK:

Check Performed	**Result**
Air Intake	_____
Neutralize Exhaust	_____
A/C System	_____
Neutralize Converter	_____
Neutralize Mounts	_____
Other	_____

ROAD TEST: Improved? **Y/N** Vehicle Acceptable? **Y/N**

COMMENTS: _____

F7559-A

Official Licensed Product Ford Motor Company

DIAGNOSIS AND TESTING (Continued)

Road Test Quick Checks

1. **24-80 km/h (15-50 mph):** With light acceleration, a moaning noise is heard, and possibly a vibration is felt in the floorpan. It is usually worse at a particular engine speed and at a particular throttle setting during acceleration at that speed. It may also produce a moaning sound, depending on what component is causing it.

   Refer to Pinpoint Test B.

2. **Slow acceleration and deceleration**: A shake is sometimes noticed in the steering wheel (3600) / steering column tube, seats, floorpan, trim panels or front end sheet metal. It is a low frequency vibration (around 9-15 cycles per second). It may or may not be increased by applying brakes lightly.

   Refer to Pinpoint Test A.

3. **At road speed**: A vibration is felt in the floorpan or seats with no visible shake, but with an accompanying sound or rumble, buzz, hum, drone or booming noise. Coast with transmission control selector lever in NEUTRAL and engine idling. If vibration is still evident, it may be related to wheels, tires, front disc brake rotors (1125), rear brake drums (1126) wheel hubs (1104), wheel bearings (4000), driveshaft balance, rear axle universal joint flange runout or transmission balance.

   Refer to Pinpoint Test A.

4. **0-High Speed:** A vibration is felt whenever the engine reaches a particular rpm. It will disappear in NEUTRAL coast. The vibration can be duplicated by operating the engine at the problem rpm while the vehicle is parked. It can be caused by any component, from the accessory drive belt to the torque converter which turns at engine speed when the vehicle is stopped.

   Refer to Pinpoint Test D.

Road Conditions

The type of road and its surface condition are important factors in the road test. A smooth asphalt road that allows driving over a range of speeds is best. The brushed concrete road surface found on many expressways and the coarse aggregate sometimes found in concrete can mask many vehicle noises and make NVH diagnosis difficult.

If the customer complains of a noise or vibration on a particular road and only on a particular road, the source of the concern may be the condition of the road surface and not the vehicle. If possible, try to test on the same type of surface. In this case, a smooth asphalt road may not be the best.

Vehicle Preparation

1. Check and verify if vehicle is equipped with original equipment (OE), type, size and brand wheels and tires. If non-original equipment (OE) wheels and or tires are installed, it may be necessary to substitute original equipment (OE) level tire / wheel assemblies to eliminate this factor before proceeding with the NVH diagnosis. Check and verify that ride height of vehicle has not been modified
2. Check and set tire pressure.
3. Unlock the front hubs and back up approximately 20 feet to make sure of hub disengagement if the vehicle is a 4x4.
4. Remove any externally mounted accessories such as luggage racks, or magnetic base or the antenna which may cause wind noise that interferes with NVH diagnosis.
5. Use a tachometer.
6. Note the fuel level. Some vehicles change in their response to various excitations when the fuel level changes. If the customer mentions that the concern does not occur all the time, this might be a factor.
7. Try to duplicate the conditions with the customer present, particularly the speed and throttle operation. It is not uncommon to find concerns which the customer didn't notice so it is important to identify the specific concern causing the complaint.
8. Find the speed where the concern is most severe.
9. Turn the air conditioning system off and on to isolate air conditioning system impact on the noise. Accelerate gently through this speed to a few mph above it and then coast back down a few mph below it and note if the concern changes character when driving through or coasting down.
10. Repeat this procedure if necessary to get a feeling for the behavior. Then drive about five mph above the speed, put the transmission in neutral and coast down. Note any change in behavior.
11. Try "floating" the driveline by backing off slightly on the throttle at the problem speed. The idea is to unload the axle gears and the universal joints as much as possible. This test is difficult to master and sometimes it helps to test on a slight downgrade so that gravity is counteracting the aerodynamic drag.

If the concern does not change in all these modes of operation, the cause may well be driveline imbalance since the imbalance is not changed by the throttle position.

Ford Motor Company Proprietary Product

DIAGNOSIS AND TESTING (Continued)

If there is a distinct change in the character or intensity between the drive and coast modes of operation, the concern is not likely imbalance but is most likely due to the axle or the universal joints since they are sensitive to the load on the driveline. (The axle pinion gear teeth are machined on two separate machines. One machine does the drive side of the teeth, another does the coast side. Hence there can be a great difference in performance between driving and coasting in gear.) If the noise and / or vibration goes away when the driveline is "floated" or when coasting through the speed range in neutral, the diagnosis is strengthened. Driveline imbalance does not go away in a neutral coast, but axle and joint concerns may.

To become familiar with the symptoms of imbalance and to determine if driveline imbalance exists on the vehicle, intentionally imbalance the driveline. This can be done by installing three hose clamps with screw heads aligned on the rear of the driveshaft. Test drive the vehicle again. If the same vibration is still present but now intensified, the concern is driveline imbalance. If a new vibration is now present as a result of the intentional imbalance, the original condition would not be caused by driveline imbalance.

1. Elevate the rear wheels slightly. Check to make sure that both are turning, and run the engine up with the vehicle in gear.
2. Explore the speed range of interest using the drive / cruise / coast / float tests as described under Vehicle Preparation.
3. A coast down in neutral should also be conducted. If the vehicle is free of vibration when operating at a steady indicated speed and behaves very differently in drive and coast, an axle concern is likely.

A test on the hoist may produce different vibrations and noises than a road test because of the effect of the hoist on the rear axle. It is not unusual to find vibrations on the hoist that were not found in the road test and in most instances they may be ignored. Similarly, some problems may be apparent only on smooth asphalt roads. If the condition that was found on the road can be duplicated on the hoist, a great deal of time can be saved by doing experiments on the hoist.

Hoist Test

After a road test, but only after a road test, it is sometimes useful to do a similar test on a hoist. Use an axle hoist, not a frame hoist. An axle hoist will not change the driveline angles. If only a frame hoist is available, axle stands should be used.

Licensed Product
Ford Motor Company

Symptom Charts

ROAD TEST DIAGNOSIS

Condition	Possible Source	Action
• Noise Is the Same on Drive or Coast	• Road noise. • Tire noise. • Front wheel bearing noise. • Differential bearings. • Pinion bearings.	• Vehicle OK. • INSPECT/REPLACE tires. REFER to Section 04-04. • INSPECT/REPLACE front wheel bearings. REFER to appropriate section in Group 04 (2-wheel drive) or Group 05 (4-wheel drive) in the Powertrain, Drivetrain Manual. • INSPECT differential bearings. REFER to appropriate section in Group 05 in the Powertrain, Drivetrain Manual. • INSPECT pinion bearings. REFER to appropriate section in Group 05 in the Powertrain, Drivetrain Manual.
• Noise Changes with Type of Road Surface	• Road noise. • Tire noise.	• Vehicle OK. • INSPECT/REPLACE tires. REFER to Section 04-04.
• Noise Tone Lowers As Vehicle Speed Lowers	• Tire noise. • Driveline noise.	• INSPECT/REPLACE tires. REFER to Section 04-04. • INSPECT driveshaft, U-joints and rear axle universal joint flange. REFER to Section 05-00 in the Powertrain, Drivetrain Manual. For removal of driveshaft, REFER to Section 05-01 in the Powertrain, Drivetrain Manual.

DIAGNOSIS AND TESTING (Continued)

ROAD TEST DIAGNOSIS (Continued)

Condition	Possible Source	Action
• Similar Noise Is Produced with Vehicle Standing or Driving	• Accessory noise. • Transmission noise. • Engine noise.	• GO to Pinpoint Test D. • INSPECT transmission and mount. REFER to appropriate section in Group 07 in the Powertrain, Drivetrain Manual. • GO to Pinpoint Test B. PERFORM Neutral Engine Run-Up Test (NERU) and Drive Engine Run-UP (DERU) Test under Road Test in the Diagnosis and Testing portion of this section. INSPECT engine. REFER to appropriate section in Group 03 in the Powertrain, Drivetrain Manual.
• Noise Most Pronounced on Turns	• Front or rear wheel bearings. • Differential side gears and pinion gears.	• INSPECT front / rear wheel bearings. REFER to appropriate section in Group 04 (2-wheel drive) or Group 05 (4-wheel drive) in the Powertrain, Drivetrain Manual for front and rear wheel bearings. • INSPECT/REPLACE faulty gears or clutch packs (if equipped with limited slip). REFER to appropriate section in Group 05 in the Powertrain, Drivetrain Manual.
• Drive Noise, Coast Noise	• Wheel bearings. • Ring and pinion gear.	• INSPECT front / rear wheel bearings. REFER to appropriate section in Group 04 for front wheel bearings on 4x2 vehicles or Group 05 in the Powertrain, Drivetrain Manual for front and rear wheel bearings on 4x4 vehicles. • GO to Pinpoint Test G. INSPECT ring and pinion gear. REFER to appropriate section in Group 05 in the Powertrain, Drivetrain Manual.
• Clunk on Acceleration or Deceleration	• Inoperative throttle damper. • Loose suspension components. • Worn and / or loose driveshaft U-joints / rear axle universal joint flange. • Worn driveshaft slip-yoke splines or sticking slip-yoke. • Loose engine mounts. • Excessive ring and pinion gear backlash. • Transmission (backlash).	• REFER to appropriate section in Group 03 in the Powertrain, Drivetrain Manual. • INSPECT suspension. REFER to appropriate section in Group 04. • GO to Pinpoint Test J. • GO to Pinpoint Test J. • GO to Pinpoint Test C. • GO to Pinpoint Test G. • REFER to appropriate section in Group 07 in the Powertrain, Drivetrain Manual.
• Noise Is Different When Transmission in Drive During Coasting and When in Neutral During Coasting	• Axle. • Transmission.	• GO to Pinpoint Test G. • INSPECT transmission. REFER to appropriate section in Group 07 in the Powertrain, Drivetrain Manual.
• Gear Howl and Whine	• Ring gear runout. • Insufficient bearing preload. • Ring and pinion gear backlash. • Worn ring and pinion gears.	• GO to Pinpoint Test G.
• Chuckle Noise	• Broken gear teeth. • Ring and pinion gear clearance.	• GO to Pinpoint Test G.
• Knock Noise	• Axle shaft end play.	• INSPECT and repair axle shafts. REFER to appropriate section in Group 05 in the Powertrain, Drivetrain Manual.

Official Licensed Product
Ford Motor Company

DIAGNOSIS AND TESTING (Continued)

AXLE DIAGNOSIS REAR

Condition	Possible Source	Action
• Vibration and Boom	• Ring gear and pinion.	• REFER to Axle Pitch Line Runout / Boom under Component Tests in this section.
• Rear Axle Noise	• Differential carrier. • Axle shafts. • Lubricant.	• GO to Pinpoint Test G.
• Loud "Clunk" in the Driveshaft When Shifting from Reverse to Forward	• Driveshaft. • Rear axle shaft or carrier.	• GO to Pinpoint Test J. • GO to Pinpoint Test G.
• On Turns, the Rear Axle Has a Chattering Noise (Limited Slip Axles Only). Slight Chatter or Groaning Noise on Slow Turns After Extended Highway Driving Is Considered Acceptable and Has No Detrimental Effect on the Limited Slip Axle Functions.	• Lubricant. • Differential.	• GO to Pinpoint Test G.

ACCESSORY DRIVE DIAGNOSIS

Condition	Possible Source	Action
• Excessive Noise	• Seized accessory.	• GO to Pinpoint Test D.
• Belt Squeal	• Loose belt.	• GO to Pinpoint Test D.
• Noisy Accessory	• Worn accessory bearings. • Loose bolts / brackets.	• GO to Pinpoint Test D.
• Rattle	• Loose pulley, accessory or bracket.	• GO to Pinpoint Test D.
• Noisy Tensioner Pulley Bearing	• Worn bearing.	• GO to Pinpoint Test D.
• Belt Chirp	• Misaligned power steering pulley.	• GO to Pinpoint Test D.
• Severe Belt Flutter	• Loose belt. • Binding tensioner arm.	• GO to Pinpoint Test D.

NOISE, VIBRATION AND HARSHNESS DIAGNOSIS

Condition	Possible Source	Action
• Shake / Vibration in Drive Under Acceleration / Deceleration	• Tires / wheels. • Loose or misadjusted wheel bearings. • Brake rotors / drums — brake imbalance. • Suspension / steering linkage. • Engine / transmission.	• GO to Pinpoint Test A.
• Tip-In Moan	• Air cleaner. • Engine mounts. • Exhaust.	• GO to Pinpoint Test B.
• Idle Boom / Shake / Vibration	• Engine control cables or hoses. • Engine mounts. • Exhaust. • Drive belts and pulleys.	• GO to Pinpoint Test C. • GO to Pinpoint Test D.
• Engine Accessory Vibration	• Drive belts and pulleys. • Mounting hardware. • Accessories.	• GO to Pinpoint Test D.
• Driveshaft Vibration	• Driveshaft — runout indexing (axle / transmission), rear axle universal joint flange, and balance.	• GO to Pinpoint Test E.
• Tire / Wheel Runout	• Imbalanced tires. • Damaged tire / wheel.	• GO to Pinpoint Test A.
• Brakes — Vibration / Shudder	• Brake shoes / pads. • Brake rotors / drums. • Brake calipers / wheel cylinders.	• GO to Pinpoint Test F.

Official Ford Product Ford Motor Company

DIAGNOSIS AND TESTING (Continued)

NOISE, VIBRATION AND HARSHNESS DIAGNOSIS (Continued)

Condition	Possible Source	Action
• Axle Gear Noise	• Improper or low axle fluid lubricant. • Axle shaft splines. • Differential gears. • Broken ring gear bolts. • Broken teeth on gears. • Incorrect clearance between axle gears (ring and pinion). • Worn pinion gear / bearings.	• GO to Pinpoint Test G.
• Noise or Vibration — 4-WD Vehicles	• Wheels / tires. • Wheel bearings. • Driveshafts / U-joints. • Hubs, automatic or manual locking. • Engine / transmission mounts. • Transfer case. • Engine / transmission.	• GO to Pinpoint Test A. • GO to Pinpoint Test H. • GO to Pinpoint Test E or Pinpoint Test J. • GO to Pinpoint Test H. • GO to Pinpoint Test C. • GO to Pinpoint Test H. • GO to Pinpoint Test A.
• Driveshaft Joint Noise and Vibration	• Worn U-joints. • Center bearing support (driveshaft). • Worn slip-yoke. • Worn or damaged driveshaft.	• GO to Pinpoint Test B.
• Non-Axle Noise	• Grille whistle. • Trim moulding. • Roof top luggage rack (if equipped). • Drive belt squeal or chirp. • Tires. • A / C system. • Exhaust. • Aftermarket add-ons (running boards, grounding body to frame, antennas, visors, bug deflectors, etc.).	• GO to Pinpoint Test K.
• Axle Noise	• Bent or damaged axle housing. • Axle shafts. • Bearings.	• GO to Pinpoint Test G.
• Wheel End Vibration Analysis	• Tires / wheels. • Worn or damaged wheel bearing. • Brake drum / rotor imbalance. • Engine or transmission mounts.	• GO to Pinpoint Test A.
• Engine Run-Up Check	• A / C system. • Exhaust. • Transmission. • Engine.	• REFER to Neutral Engine Run-Up Test (NERU) and Drive Engine Run-Up (DERU) Test under Road Test in the Diagnosis and Testing portion of this section.
• Drive Belt Check	• Drive belt and / or pulleys.	• GO to Pinpoint Test D.

Official Licensed Product

Pinpoint Tests

These pinpoint tests are designed to take the technician through a step-by-step diagnosis procedure to determine the cause of a condition. It may not always be necessary to follow a chart to its conclusion. Perform only the steps necessary to correct the condition. Then check the operation of the system to be sure the condition has been corrected.

It is sometimes necessary to remove vehicle components to gain access to the component to be tested. Refer to the applicable section for removal and installation of components. After verifying that the condition has been corrected, make sure all components removed have been reinstalled.

When performing Pinpoint Test A, Shake / Vibration in Drive Under Acceleration / Deceleration diagnosis or Pinpoint Test D, Engine Accessory Vibration diagnosis, observe the following precautions:

DIAGNOSIS AND TESTING (Continued)

WARNING: IF ONLY ONE DRIVE WHEEL IS ALLOWED TO ROTATE, SPEED MUST BE LIMITED TO 55 KM/H (34 MPH) USING THE SPEEDOMETER READING SINCE ACTUAL WHEEL SPEED WILL BE TWICE THAT INDICATED ON THE SPEEDOMETER. EXCEEDING A SPEED OF 55 KM/H (34 MPH) OR ALLOWING THE DRIVE WHEEL TO HANG UNSUPPORTED COULD RESULT IN TIRE DISINTEGRATION AND/OR DIFFERENTIAL FAILURE, WHICH COULD CAUSE SERIOUS PERSONAL INJURY AND EXTENSIVE VEHICLE DAMAGE.

PINPOINT TEST A: SHAKE/VIBRATION IN DRIVE UNDER ACCELERATION/DECELERATION

Test Step		Result ▶	Action to Take
A1	ROAD TEST FOR SHAKE/VIBRATION		
	• Accelerate vehicle to the speed at which the customer indicated the shake/vibration occurred. • Record the critical vehicle speed and/or engine rpm. • Place transmission in neutral and allow engine to return to idle. • **Does shake/vibration disappear during neutral coast test?**	Yes ▶ No ▶	PERFORM Neutral Engine Run-Up Test (NERU) and Drive Engine Run-Up (DERU) Test Under Road Test in the Diagnosis and Testing portion of this section. GO to **A2**.
A2	INSPECT TIRES/WHEELS		
	• Raise vehicle on a frame contact hoist. Inspect tires/wheels for extreme wear or damage, cupping or flat spots. 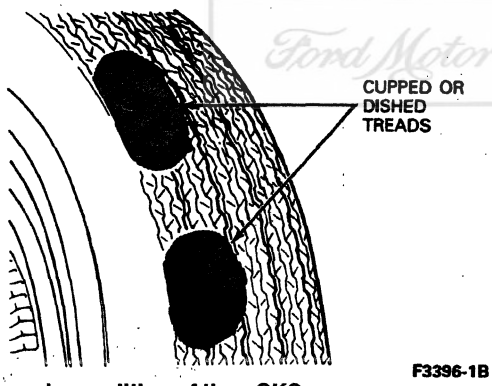 F3396-1B • **Is condition of tires OK?**	Yes ▶ No ▶	GO to **A3**. CHECK suspension components for misalignment, abnormal wear or damage that may have contributed to the tire wear. CORRECT suspension concerns and REPLACE damaged tires. PERFORM road test.
A3	INSPECT WHEEL BEARINGS		
	• Spin tires by hand to check for wheel bearing roughness. Check wheel bearing end play. Refer to Section 04-01A or Section 04-01B. • **Is wheel bearing end play OK?**	Yes ▶ No ▶	GO to **A4**. REPLACE wheel bearings as necessary. PERFORM road test.
A4	TIRE/WHEEL BALANCE		
	• Check tire/wheel balance. Refer to Section 04-04. • **Are tires and wheels balanced?**	Yes ▶ No ▶	GO to **A5**. BALANCE tires and wheels as necessary. PERFORM road test.

Ford Motor Company

DIAGNOSIS AND TESTING (Continued)

PINPOINT TEST A: SHAKE / VIBRATION IN DRIVE UNDER ACCELERATION / DECELERATION (Continued)

Test Step		Result ▶	Action to Take
A5	MEASURE RUNOUTS		
• Use Dial Indicator with Bracketry TOOL-4201-C or equivalent. • For each wheel position measure, locate and mark the following: — High point of tire / wheel assembly total radial runout. — High point of wheel radial runout. — High point of wheel lateral runout.		Yes ▶ No ▶	GO to **A6**. COMPLETE Step **A5**.

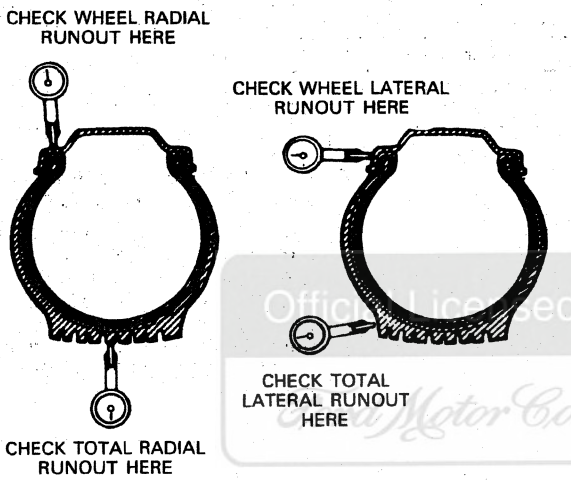

Official Licensed Product Ford Motor Company

- Record all measurements in chart below

Assembly Position	Tire / Wheel Assembly Total Radial Runout	Wheel Radial Runout	Wheel Lateral Runout
Left Front			
Right Front			
Left Rear			
Right Rear			
Example	1.52 mm (0.060 Inch)	0.50 mm (0.020 Inch)	0.63 mm (0.025 Inch)

- **Have all tire / wheel assemblies been measured?**

DIAGNOSIS AND TESTING (Continued)

PINPOINT TEST A: SHAKE/VIBRATION IN DRIVE UNDER ACCELERATION/DECELERATION (Continued)

Test Step		Result ▶	Action to Take
A6	ANALYSIS OF RUNOUT MEASUREMENT		
	• Measurements obtained in A5 must fall within guidelines below. • **Do the measurements obtained in A5 fall within specifications listed in Condition 1 in the following chart?**	Yes ▶ No ▶	Condition 1 — Good Assembly. GO to **A14**. Condition 2 — GO to **A7**. Condition 3 — GO to **A7**. Condition 4 — GO to **A7**.

Condition	Assembly Total Radial Runout	Wheel Radial Runout	Wheel Lateral Runout
1	Less Than 1.02 mm (0.040 Inch)	Less Than 1.14 mm (0.045 Inch)	Less Than 1.14 mm (0.045 Inch)
2	Less Than 1.02 mm (0.040 Inch)	More Than 1.14 mm (0.045 Inch)	Less Than 1.14 mm (0.045 Inch)
3	Less Than 1.02 mm (0.040 Inch)	Less Than 1.14 mm (0.045 Inch)	More Than 1.14 mm (0.045 Inch)
4	More Than 1.02 mm (0.040 Inch)	Less Than 1.14 mm (0.045 Inch)	Less Than 1.14 mm (0.045 Inch)

A7	WHEEL HUB BOLT RUNOUT		
	• Wheel hub bolt runout can affect wheel runout. Remove wheels and inspect wheel hub bolts. • Measure wheel hub bolt runout using Dial Indicator with Bracketry TOOL-4201-C or equivalent. Refer to Section 04-04. **WHEEL HUB BOLT RUNOUT** 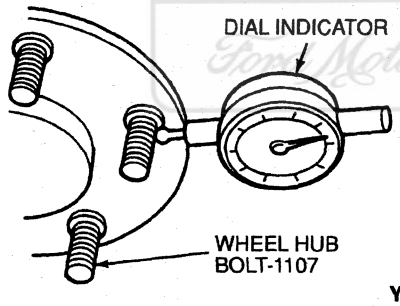 Y2371-C • Wheel hub bolt circle runout should not exceed 0.41 mm (0.016 inch) TIR (total indicated runout). • **Is wheel hub bolt runout within the limit?**	Yes ▶ No ▶	If Condition 2 or 3 from **A6**, GO to **A10**. If Condition 4, GO to **A11**. CHECK for bent or damaged wheel hub bolts. REPLACE as necessary. CHECK wheel hub bolt runout again. If OK, REMEASURE runouts as in **A5**. If Condition 2 or 3 from **A6** persists, GO to **A10**. If Condition 1, GO to **A14**. If Condition 4, GO to **A11**.

Official Licensed Product Ford Motor Company

DIAGNOSIS AND TESTING (Continued)

PINPOINT TEST A: SHAKE/VIBRATION IN DRIVE UNDER ACCELERATION/DECELERATION (Continued)

Test Step		Result ▶	Action to Take
A8	WHEEL PILOT RADIAL RUNOUT		
	• Zero the indicator and slowly rotate axle shaft one complete revolution. • Record total deflection. • Wheel pilot radial runout should not exceed 0.254 mm (0.010 inch) TIR (total indicated runout). • **Is wheel pilot radial runout within the accepted limit?** 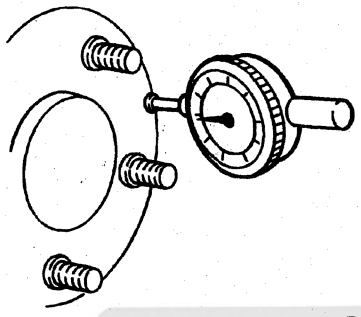 DF0106-A	Yes ▶ No ▶	REPAIR or REPLACE as necessary. GO to **A9**.
A9	FLANGE FACE LATERAL RUNOUT		
	• Zero the indicator and slowly rotate the axle shaft one complete revolution. • Record total deflection. • Flange face lateral runout should not exceed 0.152 mm (0.006 inch) for disc brakes or 0.508 mm (0.020 inch) for drum brakes TIR (total indicated runout). • **Is flange face lateral runout within the accepted limit?** 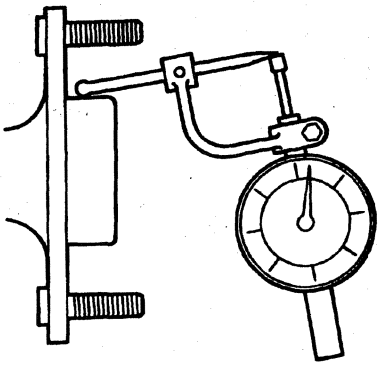 DF0105-A	Yes ▶ No ▶	REPAIR or REPLACE as necessary. GO to **A10**.
A10	REPLACING A WHEEL		
	• Measure the runouts on the new assembly. • **Is assembly within specification from A6?**	Yes ▶ No ▶	GO to **A13**. GO to **A11**.
A11	INDEX TIRE/WHEEL ASSEMBLY		
	• Align high point of total assembly radial runout 180 degrees away from high point of wheel radial runout. • Measure total assembly radial runout. • **Is total radial runout less than 1.02 mm (0.040 inch)?**	Yes ▶ No ▶	GO to **A13**. GO to **A12**.

Ford Licensed Product

DIAGNOSIS AND TESTING (Continued)

PINPOINT TEST A: SHAKE / VIBRATION IN DRIVE UNDER ACCELERATION / DECELERATION (Continued)

Test Step		Result ▶	Action to Take
A12	REPLACE A TIRE		
	• Measure total assembly radial runout on new assembly. • **Is total radial runout less than 1.02 mm (0.040 inch)?**	Yes ▶ No ▶	GO to **A13**. INDEX tire / wheel assembly as in A11. If new assembly is now within specifications, GO to **A13**. If new assembly is still not within specifications, GO to **A14**.
A13	ROAD TEST		
	• Balance new tire / wheel assembly. • After all assemblies have been checked and corrected, road test vehicle. • **Is vehicle operating correctly?**	Yes ▶ No ▶	Vehicle OK. GO to **A14**.
A14	SUBSTITUTE WHEELS AND TIRES		
	• Substitute a known good set of wheels and tires. • Road test. • If the vehicle still exhibits a shake or vibration, note the vehicle speed or engine rpm at which it occurs. • **Is vibration felt?**	Yes ▶ No ▶	GO to **A15**. INSTALL original tire / wheel assemblies one by one, ROAD TESTING after each assembly has been installed until the damaged tire(s) is identified. REPLACE tire(s) as necessary and RETEST.
A15	VIBRATION DIAGNOSIS OF ENGINE / TRANSMISSION VS. DRIVESHAFT / SUSPENSION COMPONENTS		
	• Spin all four wheels independently to identify position generating problem vibration. — For front wheels, use on-vehicle balance machine. — For rear wheels, accelerate to half critical speed observed in road test. • **Was any vibration observed at the wheels?**	Yes ▶ No ▶	GO to **A16**. Engine / transmission imbalance. REFER to Group 02, Group 03 and Group 07 in the Powertrain, Drivetrain Manual.
A16	ROAD TEST FOR PROPER OPERATION		
	• After checking all wheel positions and correcting as needed, road test vehicle. • **Is vehicle operating correctly?**	Yes ▶ No ▶	Vehicle OK. GO to Pinpoint Test E.

PINPOINT TEST B: TIP-IN MOAN

Test Step		Result ▶	Action to Take
B1	ENGINE AIR CLEANER		
	• Check engine air cleaner for proper installation of base gasket, lid element and engine air cleaner intake tube and duct assembly. • **Are components properly installed?**	Yes ▶ No ▶	GO to **B2**. CORRECT condition and PERFORM road test. If moan persists, GO to **B2**.

Licensed Product Ford Motor Company

DIAGNOSIS AND TESTING (Continued)

PINPOINT TEST B: TIP-IN MOAN (Continued)

Test Step		Result	Action to Take
B2	ENGINE MOUNTS		
	• Neutralize engine mounts as follows: — Loosen, but do not remove, engine mount fasteners. — Start the engine and apply service brakes. — Shift transmission into drive and back into neutral. — Stop engine. — Retighten engine mounts. Road test. **NEUTRALIZING ENGINE MOUNTS** 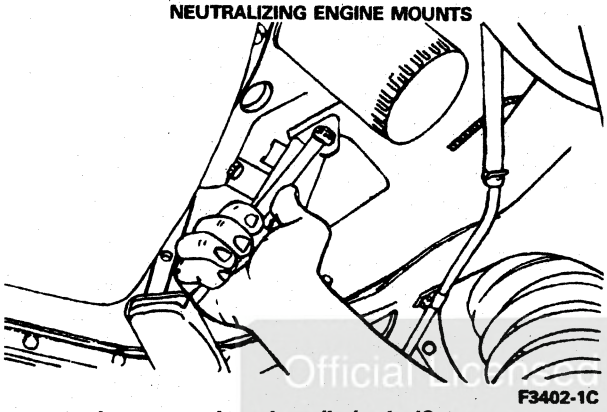 F3402-1C • **Is moan reduced or eliminated?**	Yes ▶ No ▶	Vehicle OK. GO to **B3.**
B3	EXHAUST SYSTEM		
	WARNING: PROPERLY VENT EXHAUST FUMES OUTSIDE OF WORKING AREA. **WARNING: EXHAUST SYSTEM COMPONENTS ARE HOT.** • Warm up system to normal operating temperature. Loosen all hanger attachments and reposition hangers until they hang free and straight. Then loosen all flange joints and, with engine running, shift transmission from neutral to drive and back to neutral (or load engine with clutch). Tighten all hanger clamps and flanges. Road test vehicle. 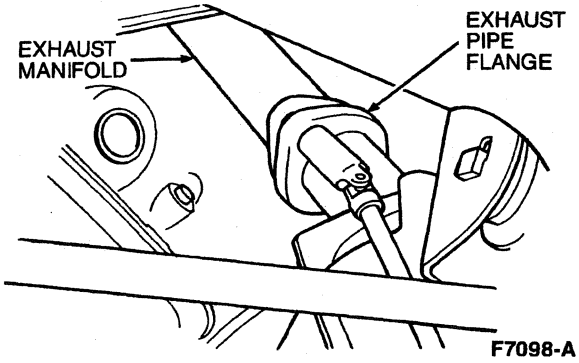 F7098-A • **Is moan reduced or eliminated?**	Yes ▶ No ▶	REPLACE exhaust components as necessary. Vehicle OK. REPEAT Pinpoint Test B. If moan is not eliminated, REFER to Symptom Charts in the Diagnosis and Testing portion of this section for other possible conditions.

Official Licensed Product

DIAGNOSIS AND TESTING (Continued)

PINPOINT TEST C: IDLE BOOM/SHAKE/VIBRATION

Test Step		Result ▶	Action to Take
C1	CABLE/HOSES		
	• Check engine compartment for any component that may be grounding between the engine and body or chassis. Example: control cables, A/C hoses, accelerator cable, etc. • **Are components OK?**	Yes ▶ No ▶	GO to **C2**. CORRECT condition and PERFORM road test.
C2	ENGINE MOUNTS		
	• Inspect engine mounts. • Neutralize engine mounts. Refer to Pinpoint Test Step **B2**. • **Are mounts OK?**	Yes ▶ No ▶	GO to **C3**. REPLACE mounts. PERFORM road test.
C3	EXHAUST SYSTEM		
	WARNING: PROPERLY VENT EXHAUST FUMES OUTSIDE OF WORK AREA. **WARNING: EXHAUST SYSTEM COMPONENTS ARE HOT.** • Warm up system to normal operating temperature. Loosen all hanger attachments and reposition hangers until they hang free and straight. Then loosen all flange joints and, with engine running, shift transmission from neutral to drive and back to neutral (or load engine with clutch). Tighten all hanger clamps and flanges. Road test vehicle. • **Is system OK?**	Yes ▶ No ▶	REPLACE exhaust components as necessary. Vehicle OK. GO to **D2**.

Official Licensed Product Ford Motor Company

PINPOINT TEST D: ENGINE ACCESSORY VIBRATION

Test Step		Result ▶	Action to Take
D1	ENGINE RUN-UP		
	• Run up engine to problem rpm observed in road test, with vehicle stationary. • **Does vibration occur?**	Yes ▶ No ▶	GO to **D2**. REFER to Symptom Charts in the Diagnosis and Testing portion of this section for other possible conditions.
D2	DRIVE BELT AND PULLEYS		
	• With engine stopped, inspect drive belt and pulleys for wear or damage, and check drive belt tension using Belt Tension Gauge T63L-8620-A or Rotunda Offset Belt Tension Gauge 014-R1066 or equivalent. • Automatic tensioners have belt wear indicator marks. If the indicator mark is not between the min and max marks, the drive belt is worn or an incorrect drive belt is installed. 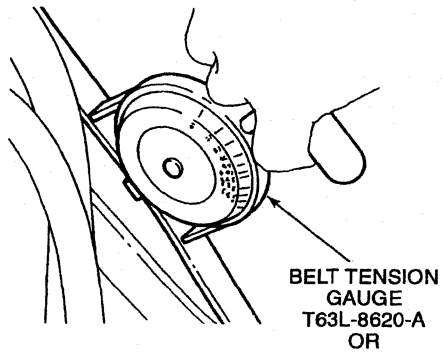 BELT TENSION GAUGE T63L-8620-A OR 014-R1056 Q4239-C • **Are drive belts or pulleys worn or damaged?**	Yes ▶ No ▶	REPLACE worn or damaged drive belt or pulleys. CORRECT drive belt tension. GO to **D3**.

DIAGNOSIS AND TESTING (Continued)

PINPOINT TEST D: ENGINE ACCESSORY VIBRATION (Continued)

Test Step		Result ▶	Action to Take
D3	MOUNTING HARDWARE		
	• Inspect mounting brackets and adjusting components for proper alignment and tightness. • **Are mounting and adjusting components secure?**	Yes ▶ No ▶	GO to **D4**. ALIGN and TIGHTEN mounting hardware to specifications. CORRECT drive belt tension. START engine and run up to problem rpm. If vibration still exists, GO to **D4**.
D4	DRIVE BELT NOISE		
	• Check for "chirps" or squeal in drive belt by spraying a small amount of water on the grooved side of the drive belt (use a spray bottle or equivalent). • **Does the noise change?**	Yes ▶ No ▶	CHECK for misalignment. CHECK tensioner position. CHECK for worn drive belt. SERVICE / REPLACE as required. CHECK accessory bearings. REPLACE as required. GO to **D5**.
D5	DRIVE BELT AND PULLEYS — ENGINE IDLING		
	• With engine idling, visually check all drive belts and pulleys for misalignment, runout or irregular motion. Maximum runout is 3.175 mm (0.125-inch). • Increase engine rpm. • **Was any misalignment or irregular motion detected?**	Yes ▶ No ▶	REPLACE pulley or drive belt as required. GO to **D6**.
D6	CHECK BELT(S)		
	• Key off. Remove one of the drive belts. • Key to RUN, engine running. • If vibration still exists, remove the next drive belt. Repeat step until no drive belts are left. • **Has the vibration been reduced or eliminated?**	Yes ▶ No ▶	REPLACE the last drive belt removed. If the condition still occurs after replacement, SERVICE / REPLACE accessory. RETURN to Symptom Charts in the Diagnosis and Testing portion of this section for additional possible causes.

Official Licensed Product

PINPOINT TEST E: DRIVESHAFT VIBRATION

Test Step		Result ▶	Action to Take
E1	ROAD TEST FOR VIBRATION		
	• Accelerate vehicle to the speed at which the customer indicated the vibration occurred. • Record the critical vehicle speed and / or engine rpm. • **Is vibration present?**	Yes ▶ No ▶	GO to **E2**. Vehicle OK.
E2	ROAD SPEED HOIST TEST		
	NOTE: On 4x4 vehicles, unlock front hubs or remove hub covers before spinning wheels. • Raise vehicle on a frame contact hoist. Engage drivetrain and run up to observed road test speed. • Spin non-drive wheels using an on-vehicle balance machine. Rebalance as necessary and retest. • **Is vibration present?**	Yes ▶ No ▶	GO to **E3**. Vehicle OK.
E3	ROAD SPEED HOIST TEST WITH DRIVE WHEELS REMOVED		
	• Mark relative position of drive wheels on axle or hub lug and remove wheels. • If equipped, secure brake drums with lug nuts. • Engage drivetrain and run up to observed road test speed. • **Is vibration present?**	Yes ▶ No ▶	GO to **E4**. GO to **A2**.

DIAGNOSIS AND TESTING (Continued)

PINPOINT TEST E: DRIVESHAFT VIBRATION (Continued)

Test Step		Result	Action to Take
E4	DRIVESHAFT INSPECTION		
	• Inspect driveshaft for undercoating, physical damage, missing balance weight, improperly seated, worn or binding universal joints. • **Are driveshaft and universal joints OK?**	Yes ▶ No ▶	GO to **E5**. SERVICE as required. PERFORM road test.
E5	CHECKING DRIVESHAFT INDEX MARKS		
	• Check index marks (yellow paint daubs) on rear of driveshaft and rear axle universal joint flange. • **Are marks more than 22.5 degrees apart?**	Yes ▶ No ▶	Models with one-piece driveshaft, GO to **E6**. All others, GO to **E7**. REFER to driveshaft runout and balancing procedure in Section 05-00 in the Powertrain, Drivetrain Manual.
E6	DRIVESHAFT RUNOUT (ONE-PIECE DRIVESHAFT)		
	• With vehicle on hoist and wheels off, measure runout at front, center and rear of driveshaft with indicator, while rotating driveshaft by turning the axle. • **Does runout exceed 0.89 mm (0.035 inch)?**	Yes ▶ No ▶	If runout exceeded specs at front and center, REPLACE driveshaft. If runout exceeded specs at rear only, MARK driveshaft at rear runout high point, then GO to **E8**. REFER to driveshaft runout and balancing procedure in Section 05-00 in the Powertrain, Drivetrain Manual.
E7	DRIVESHAFT RUNOUT (TWO-PIECE DRIVESHAFT)		
	• With vehicle on hoist and wheels off, measure runout at front, center and rear of driveshaft with indicator, while rotating driveshaft by turning the axle. • **Does runout exceed 0.89 mm (0.035 inch)?**	Yes ▶ No ▶	MARK driveshaft at rear runout high point, then GO to **E8**. REFER to driveshaft runout and balancing procedure in Section 05-00 in the Powertrain, Drivetrain Manual.
E8	INDEXING DRIVESHAFT AT AXLE		
	NOTE: With driveshaft disconnected from vehicle, manipulate universal joints in each direction of rotation. If universal joint feels stiff, lumpy or gritty in any direction, replace universal joint. • Note or mark indexing of driveshaft to rear axle universal joint flange. Disconnect driveshaft at axle, turn 180 degrees, and reconnect. • Recheck runout. • **Does runout exceed 0.89 mm (0.035 inch)?**	Yes ▶ No ▶	GO to **E10**. PERFORM road test. If vibration is present, GO to **E9**.
E9	INDEXING DRIVESHAFT AT TRANSMISSION		
	NOTE: With driveshaft removed from vehicle, manipulate universal joints in each direction of rotation. If universal joint feels stiff, lumpy or gritty in any direction, replace universal joint. • Note or mark indexing of driveshaft at axle and transmission. Remove driveshaft, and turn 180 degrees at transmission only. Reinstall driveshaft. • **Is vibration still present?**	Yes ▶ No ▶	REFER to driveshaft runout and balancing procedure in Section 05-00 in the Powertrain, Drivetrain Manual. Vehicle OK.

Unauthorized Product Ford Motor Company

DIAGNOSIS AND TESTING (Continued)

PINPOINT TEST E: DRIVESHAFT VIBRATION (Continued)

Test Step		Result ▶	Action to Take
E10	CHECKING REAR AXLE UNIVERSAL JOINT FLANGE FOR EXCESSIVE RUNOUT		
	• Compare two high points of runout marked in Steps E6 or E7 with Step E8. • **Are marks within 25 mm (1 inch) of each other?**	Yes ▶	REPLACE driveshaft. PERFORM road test. If vibration is present, REFER to driveshaft runout and balancing procedure in Section 05-00 in the Powertrain, Drivetrain Manual.
		No ▶	If marks are on opposite sides, REPLACE rear axle universal joint flange. PERFORM road test. If vibration is present, REFER to driveshaft runout and balancing procedure in Section 05-00 in the Powertrain, Drivetrain Manual.

PINPOINT TEST F: BRAKE VIBRATION/SHUDDER

Test Step		Result ▶	Action to Take
F1	ROAD TEST FOR VIBRATION/SHUDDER		
	• Determine if vibration/shudder is induced when making a light stop by applying service brakes. • **Is vibration/shudder present?**	Yes ▶	INSPECT brake system. REFER to the appropriate section in Group 06. SERVICE as required.
		No ▶	REFER to Symptom Charts in the Diagnosis and Testing portion of this section for other conditions.

Official Licensed Product
Ford Motor Company

PINPOINT TEST G: AXLE NOISE

Test Step		Result ▶	Action to Take
G1	CHECK DIFFERENTIAL LUBRICANT		
	• Check for low lubricant level. • Check for wrong or poor grade axle lubricant. • **Is lubricant level low or not to specification?**	Yes ▶	ADD or REPLACE lubricant. REFER to appropriate section in Group 05 in the Powertrain, Drivetrain Manual.
		No ▶	GO to **G2**.
G2	INSPECT AXLE HOUSING		
	• Check for exterior signs of damage. • **Is axle housing damaged?**	Yes ▶	SERVICE or REPLACE. REFER to appropriate section in Group 05 in the Powertrain, Drivetrain Manual.
		No ▶	GO to **G3**.
G3	INSPECT CHATTER ON TURNS		
	• On turns, the rear axle has a chattering or groaning noise (limited slip axles only). Slight chatter noise on slow turns after extended highway driving is considered acceptable and has no detrimental effect on the limited slip axle functions. • **Is chatter noise while turning excessive?**	Yes ▶	PERFORM road test. DRIVE vehicle in tight circles, five clockwise and five counterclockwise. If chatter is still evident, ADD specified amount of additive friction modifier meeting Ford specification to the rear axle lube and REPEAT tight circle road test. If still evident, REMOVE differential and SERVICE as necessary. REFER to appropriate section in Group 05 in the Powertrain, Drivetrain Manual.
		No ▶	GO to **G4**.

DIAGNOSIS AND TESTING (Continued)

PINPOINT TEST G: AXLE NOISE (Continued)

Test Step		Result ▶	Action to Take
G4	INSPECT AXLE SHAFTS/BEARINGS		
	• Check axle shaft end play. Refer to the appropriate section in Group 05 in the Powertrain, Drivetrain Manual. • Remove axle shafts. Inspect bearings and axle shaft journals. Refer to appropriate section in Group 05 in the Powertrain, Drivetrain Manual. • Inspect axle shaft splines. • Inspect differential gears. • **Are axle shafts (splines) OK?**	Yes ▶ No ▶	GO to **G5**. REPLACE faulty axle shafts. INSPECT all differential gears. REPLACE parts as necessary. PERFORM road test.
G5	INSPECT RING GEAR BOLTS		
	• Inspect ring gear for loose or broken bolts. • Rotate rear axle universal joint flange to view all bolts. • **Are ring gear bolts OK?**	Yes ▶ No ▶	GO to **G6**. TIGHTEN or REPLACE rear gear bolts. INSPECT and REPLACE all damaged parts. REFER to appropriate section in Group 05 in the Powertrain, Drivetrain Manual. PERFORM road test.
G6	BROKEN OR MUTILATED GEAR TEETH		
	• Inspect all differential gears for wear (check gear teeth for scoring abnormal wear, nicks or chips). • **Are differential gears (ring and pinion) OK?**	Yes ▶ No ▶	GO to **G7**. REPLACE faulty gears. REFER to appropriate section in Group 05 in the Powertrain, Drivetrain Manual.
G7	CHECK DIFFERENTIAL BEARINGS		
	• Remove differential and inspect bearings for wear. • **Are differential bearings OK?**	Yes ▶ No ▶	GO to **G8**. REPLACE faulty bearings. REFER to appropriate section in Group 05 in the Powertrain, Drivetrain Manual. PERFORM road test.
G8	INSPECT PINION GEAR/BEARINGS		
	• Remove pinion from axle. • Inspect pinion and bearings for wear. • **Are pinion bearings OK?**	Yes ▶ No ▶	Axle OK. REFER to Symptom Charts in the Diagnosis and Testing portion of this section. REPLACE faulty bearings. REFER to appropriate section in Group 05 in the Powertrain, Drivetrain Manual.

PINPOINT TEST H: NOISE AND VIBRATION — 4-WHEEL DRIVE VEHICLES

Test Step		Result ▶	Action to Take
H1	INSPECT TIRES/WHEELS		
	• Check wheels for damage. • Check tire pressure. • Check tires for sawtooth wear pattern. • Check tires for uneven inner or outer wear. • Check tires for cupping or dishing. • Check tire balance. • **Are tires/wheels OK?**	Yes ▶ No ▶	GO to **H2**. SERVICE or REPLACE faulty tires. ALIGN if necessary.
H2	INSPECT WHEEL BEARINGS		
	• Spin front tires by hand to check for wheel bearing roughness. Check wheel bearing end play. • **Are wheel bearings OK?**	Yes ▶ No ▶	GO to **H3**. REPLACE wheel bearings. CHECK axle or spindle for wear. REFER to appropriate section in Group 05 in the Powertrain, Drivetrain Manual.

Official Licensed Product Ford Motor Company

DIAGNOSIS AND TESTING (Continued)

PINPOINT TEST H: NOISE AND VIBRATION — 4-WHEEL DRIVE VEHICLES (Continued)

Test Step		Result ▶	Action to Take
H3	INSPECT LOCKING HUBS		
	• Inspect front hubs for wear and proper operation. Refer to Section 05-03C in the Powertrain, Drivetrain Manual. • **Are front locking hubs OK?**	Yes ▶ No ▶	GO to **H4**. SERVICE or REPLACE as necessary. REFER to Section 05-03C in the Powertrain, Drivetrain Manual.
H4	CHECK TRANSFER CASE FLUID		
	• Remove transfer case fill plug. • Check fluid level of transfer case. • Check quality of transfer case fluid. • **Is transfer case lubricant OK?**	Yes ▶ No ▶	GO to **H5**. REPLACE or FILL fluid in transfer case. REFER to appropriate section in Group 07 in the Powertrain, Drivetrain Manual.
H5	INSPECT TRANSFER CASE		
	• Inspect transfer case for proper operation. Refer to Section 07-07A and Section 05-03C in the Powertrain, Drivetrain Manual. • Inspect internal parts for wear. • **Is transfer case OK?**	Yes ▶ No ▶	REFER to Symptom Charts in the Diagnosis and Testing portion of this section. SERVICE or REPLACE parts as necessary. For service procedures, REFER to appropriate section in Group 07 in the Powertrain, Drivetrain Manual.

PINPOINT TEST J: DRIVESHAFT JOINT NOISE AND VIBRATION

Test Step		Result ▶	Action to Take
J1	INSPECT DRIVESHAFT U-JOINTS		
	• Raise vehicle on hoist. Follow the hoist manufacturer's instructions. • Inspect universal joints (U-joint) for excessive play (wear) between U-joint and U-joint bearing cup. • **Are U-joints OK?**	Yes ▶ No ▶	GO to **J2**. REMOVE driveshaft and REPLACE faulty U-joints. REFER to Section 05-01 in the Powertrain, Drivetrain Manual.
J2	INSPECT DRIVESHAFT/U-JOINTS (DRIVESHAFT REMOVED)		
	• Remove driveshaft and place on a suitable workbench. • Check U-joints for seized bearing cups. • Check U-joints for smooth rotation operation. • **Are U-joints (driveshaft removed) OK?**	Yes ▶ No ▶	INSPECT driveshaft slip yoke and center bearing support (if equipped). REPLACE if faulty. If OK, REFER to Pinpoint Test E, for further diagnosis. REPLACE faulty U-joints. REFER to Section 05-01 in the Powertrain, Drivetrain Manual.

PINPOINT TEST K: NON-AXLE NOISE

Test Step		Result ▶	Action to Take
K1	INSPECT VEHICLE TRIM		

	• Inspect the following for cause of noise:
	  • grille whistle
	  • trim mouldings
	  • roof luggage rack (if equipped)
	• **Are vehicle trim components causing noise?**
		Yes ▶
		No ▶
			SERVICE or REPLACE as necessary. REPEAT road test.
			GO to **K2**.

K2	BELT SQUEAL OR CHIRP		
	• Check condition and tension of serpentine belt. Check other belts, if applicable. • **Is belt or belts OK?**	Yes ▶ No ▶	GO to **K3**. REPLACE if necessary. REFER to Section 03-05 in the Powertrain, Drivetrain Manual. For further diagnosis, GO to Pinpoint Test D.

DIAGNOSIS AND TESTING (Continued)

PINPOINT TEST K: NON-AXLE NOISE (Continued)

Test Step		Result	Action to Take
K3	INSPECT WHEELS/TIRES		
	• Inspect wheels and tires. Refer to Section 04-04. • **Are wheel and tires OK?**	Yes ▶ No ▶	GO to **K4**. REPLACE wheels/tires as necessary. REFER to Section 04-04.
K4	INSPECT A/C SYSTEM		
	• Inspect A/C system components for noise when the engine is running and A/C system is alternately engaged and disengaged. • **Are A/C system components causing noise?**	Yes ▶ No ▶	REFER to Section 12-00. GO to **K5**.
K5	EXHAUST SYSTEM		
	• Raise vehicle on hoist. Follow the hoist manufacturer's instructions. • Check for broken or loose clamps or brackets. • **Are exhaust clamps and brackets OK?**	Yes ▶ No ▶	GO to **K6**. SERVICE or REPLACE if necessary. RESTART engine. If noise still exists, GO to **K2**.
K6	CHECK NON-FACTORY ACCESSORIES		
	• Inspect running boards, grounding body to frame, antennas, visors, bug deflectors, etc. (if equipped). • **Are accessories the cause of noise?**	Yes ▶ No ▶	ADJUST, SERVICE or REPLACE accessories and/or fasteners as required. GO to Symptom Charts in the Diagnosis and Testing portion of this section.

Official Licensed Product
Ford Motor Company

Components Tests

Noise or Vibration, 4-Wheel Drive Vehicles

Verify the condition by road testing.

For 4-wheel drive vehicles, verify concern with known quality conventional tires. If symptom still exists, perform the following:

1. Shift transfer case into two-wheel drive.
2. Unlock front hub locks (or remove front driveshaft).
3. If condition disappears, concern is in front axle or driveshaft.
4. If condition persists, remove rear driveshaft and road test using front drive.
5. If condition disappears, concern is in rear driveline or axle.
6. If condition persists, refer to Symptom Charts in the Diagnosis and Testing portion of this section or other sources.

For front wheel tire concerns, refer to Match Mounting Tires in the Adjustments portion of this section.

Axle Pitch Line Runout/Boom

This condition can be misdiagnosed as driveline imbalance. The symptoms are very similar: vibration and/or boom in the range 72-97 km/h (45-60 mph). It is important to test carefully. Refer to Section 05-00 in the Powertrain, Drivetrain Manual.

Driveline imbalance yields a vibration and/or boom that is present in all modes of operation: drive, coast and neutral coast. Axle pitch line runout symptoms may change between drive and coast because the pitch line runout can be different on the drive side and coast side of the gear teeth and will definitely improve in neutral coast where the gears are unloaded.

If the source of the problem is high pitch line runout, it is necessary to change the ring and pinion gears as a set.

DIAGNOSIS AND TESTING (Continued)

Hub Bearing, Rear

Bearing malfunctions normally will be obvious at disassembly. Pinion bearings make a high-pitched, whistling noise, usually at all speeds. However, if there is only one pinion bearing that is malfunctioning, the noise may vary in different driving phases.

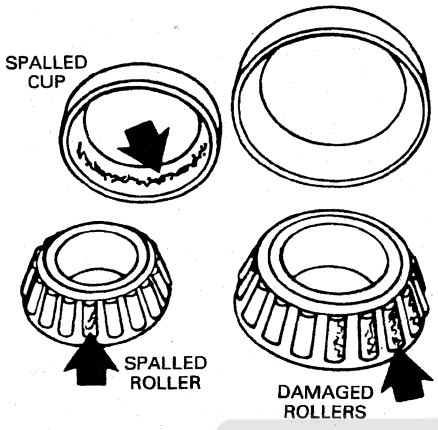

E4959-B

Pinion bearings are frequently replaced unnecessarily when correcting gear noise. They should not be replaced unless they are actually scored or damaged, or there is a specific pinion bearing noise. Examine the large end of the rollers for wear. If the original blend radius has worn to a sharp edge, the bearing assembly should be replaced.

Remember that the low-pitched rumble of a malfunctioning wheel bearing can be duplicated by a wind noise from externally mounted accessories or by tires.

On semi-floating type axles, wheel bearing noise might be mistaken for pinion bearing noise, so be sure to look at the wheel bearings carefully before disassembling the axle.

Wheel bearings on semi-floating type axles are pressed into the housing at the axle tube ends. The axle shaft is the inner race for the bearing. The rollers can run on about the center of the polished surface. So if the bearing is damaged, the roller surface on the shaft will be damaged as well.

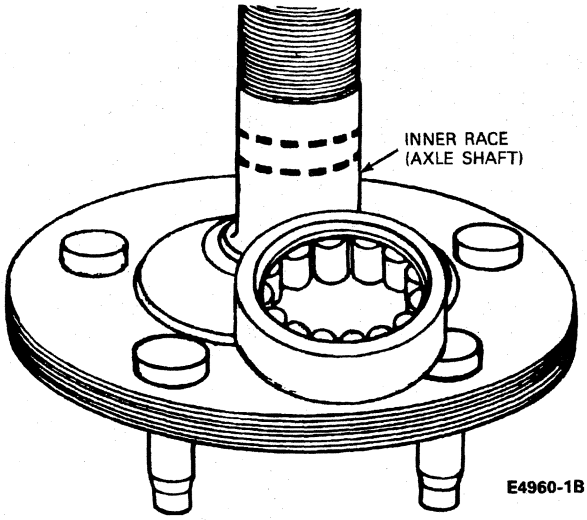

E4960-1B

Analysis of Gear Noise

The noises described in this section usually have specific causes that can be diagnosed by observation as the unit is disassembled. The initial clues are, of course, the type of noise heard on the road test and the driving conditions.

Gear Howl and Whine

When disassembling the axle to diagnose and correct gear noise, it is assumed that the tires, exhaust, and trim items have first been checked as possible causes. Examination of the gear tooth contact pattern, as shown in the following illustration, will aid diagnosis of gear whine / howl. Refer to procedure in Section 05-00 in the Powertrain, Drivetrain Manual.

DIAGNOSIS AND TESTING (Continued)

Ring and Pinion Gear Wear Pattern Interpretation

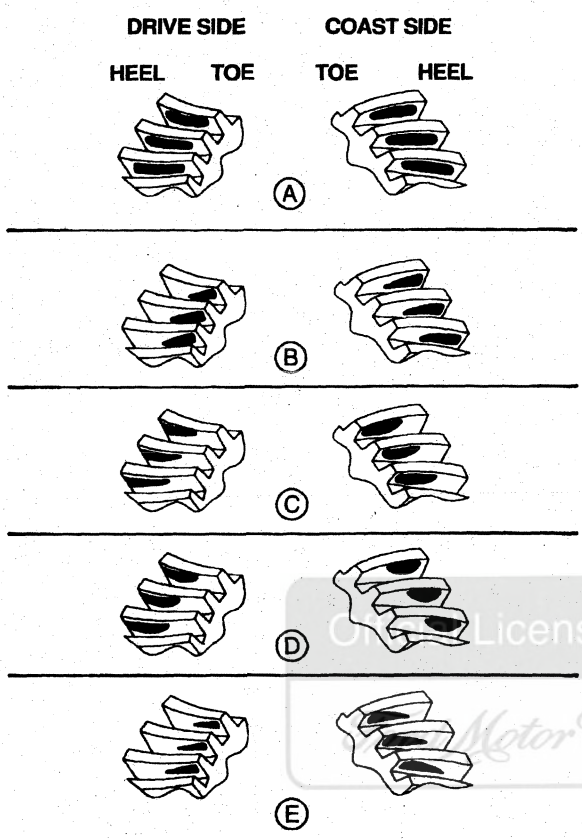

E8232-C

Item	Part Number	Description
A	—	Normal or Desirable Pattern
B	—	Backlash Correct; Thinner Pinion Position Shim Required
C	—	Backlash Correct; Thicker Pinion Position Shim Required
D	—	Pinion Position Shim Correct; Decrease Backlash
E	—	Pinion Position Shim Correct; Increase Backlash

Chuckle

Chuckle that occurs on the coast driving phase is usually caused by excessive clearance due to differential gear wear or by a damaged tooth on the coast side of the pinion or ring gear.

Any damage to a gear tooth on the coast side can cause a noise identical to chuckle. Even a very small tooth nick or ridge on the edge of a tooth is enough to cause the noise.

NICKS OR RIDGES ON DAMAGED GEAR TOOTH EDGE

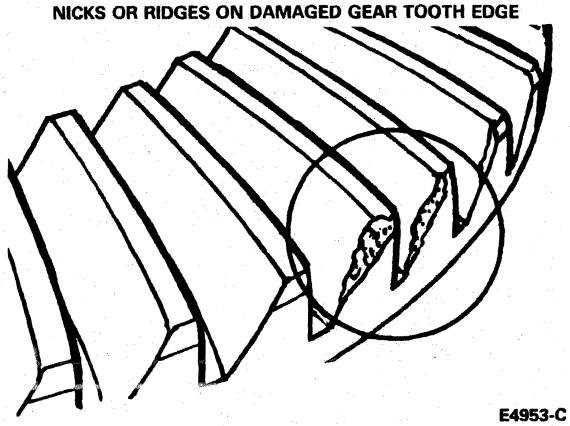

E4953-C

You can often correct this condition simply by cleaning up the gear tooth nick or ridge with a small grinding wheel. However, if the cleaned up or damaged area is larger than 3.175 mm (1/8 inch), it is advisable to replace the gearset.

To check the gearset, remove as much lubricant as possible from the gears with clean solvent. Wipe the gears dry or blow them dry with compressed air. Look for scored or damaged teeth. Refer to the following illustration. Also look for cracks or other damage.

SCORED GEAR SET TEETH

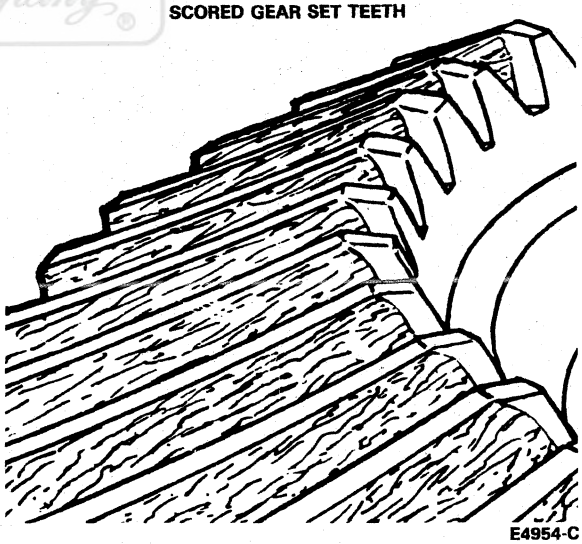

E4954-C

If either gear is damaged or scored badly, the gearset must be replaced. Also, if there is metal broken loose, the carrier and housing must be cleaned to remove particles that could cause damage later. Any other damaged parts in the axle must be replaced.

Clunk

Clunk is due to backlash in the driveline, but not necessarily in the axle. To determine whether driveline clunk is caused by the axle, make a check of the total axle backlash. Refer to Section 05-00 in the Powertrain, Drivetrain Manual for procedure.

Ford Motor Company Licensed

DIAGNOSIS AND TESTING (Continued)

Boom

A low-frequency booming noise which may be heard or sensed as a pressure in the ear drums at or above idle, possibly indicates a bound-up exhaust system or engine mounts, or can be caused by tire or driveline imbalance above 64 km/h (40 mph).

Check Bearing Preload

Both the pinion bearing and differential bearing preload must be checked to ensure that the pattern will stay in place under load.

Check the pinion bearing preload by putting a N•m (lb-in) torque wrench on the pinion nut and measuring the torque effort it takes to turn the pinion.

CHECKING PINION BEARING PRELOAD

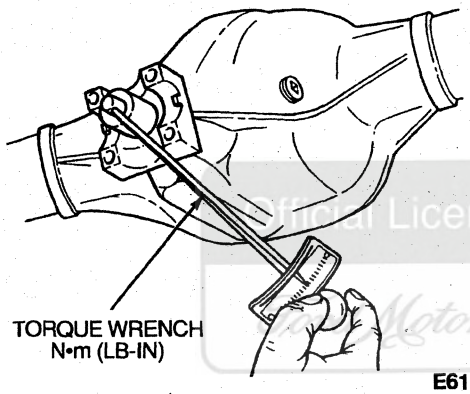

E6104-B

Compare the reading with the preload specification for used bearings. Refer to the appropriate axle section in Group 05 in the Powertrain, Drivetrain Manual.

The pinion seal will offer a resistance equivalent to 0.56-0.68 N•m (5-6 lb-in). If the bearings are preloaded, a reading higher than 0.56-0.68 N•m (5-6 lb-in) on the torque wrench scale must be obtained. If not, there is no preload.

Another indication of pinion bearing preload is some threads protruding from in front of the pinion nut. Normally about 2.29-2.54 mm (0.090-0.100 inch) of threads protrude if the preload is set properly. If the nut is flush with the end of the stem, chances are the preload was not set. Refer to the appropriate axle section in Group 05 in the Powertrain, Drivetrain Manual to reset the proper preload.

GLOSSARY OF TERMS

Terms

Acceleration

- **Light** — Increase in speed at less than half throttle.
- **Heavy** — Half to full throttle increase in speed.
- **WOT** — Wide-open throttle.

Ambient Temperature

Surrounding or prevailing temperature. Normally, the temperature in the service area or outdoors, depending on where testing is taking place.

Articulation

Vertical movement of the front driving or rear axle relative to the frame of the vehicle to which they are attached.

Belt Chirp

An intermittent noise usually at idle caused by belt misalignment.

Belt Squeal

A continuous noise caused by a frozen accessory or insufficient tension.

Boom

A very low-frequency (sometimes cycling) noise often accompanied by sensation of pressure on the ear drums.

Bound Up

Refers to a stressed, rubber-mounted component that transmits any NVH which would normally be isolated by the mount. See Neutralize.

Brakes Applied

When vehicle is stationary, service brakes applied with enough force to hold vehicle against movement with transmission in gear or drive.

Camber

Angle formed between front wheel spindle axis and horizontal as viewed from in front of the vehicle.

Camber is positive when the wheel tops are farther apart than the wheel bottoms.

Caster

Angle formed between the upper and lower ball joint centerline axis or the spindle pin axis and a vertical axis as viewed from the side of the vehicle. Caster is considered positive when the ball joint centerline axis or the top of the spindle pin axis is behind the vertical axis.

Chatter

Condition where whole rear end vibrates and is heard when the vehicle is moving.

Chuckle

Excessive clearance or wear between the pinion gear and ring gear sounding like a stick against the spokes of a spinning bicycle wheel.

Clunk

Metallic noise heard when the transmission is placed in reverse or drive or when the throttle is applied or released.

Coast/Deceleration

Engine/transmission engaged, foot off accelerator pedal.

GLOSSARY OF TERMS (Continued)

Coast/Neutral Coast

Engine/transmission taken out of gear with driveshaft (4602)/driveline by placing transmission selector in Neutral or by depressing clutch (manual transmission).

Controlled Rear Suspension Height

The height at which the components of a particular vehicle should be set when driveline angle measurements are made.

Coupling Shaft

The front shaft in a two-piece driveline.

CPS

Cycles per second.

Cruise

Steady highway speed, neither accelerating nor decelerating; even pressure on accelerator pedal on level ground.

Deceleration

Slowing of vehicle by releasing foot from accelerator at cruise and allowing engine to slow vehicle without application of brakes.

Driveline Angles

Difference of alignment between the transmission output shaft, driveshaft and rear axle pinion centerline.

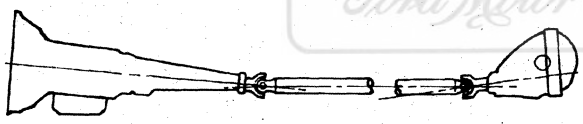

F2714-B

Driveshaft

Shaft which powers the rear axle input shaft (pinion shaft). Also, the rearmost shaft in a two-piece shaft.

Drivetrain

Includes all power transmitting components from the engine to the wheels, including clutch/torque converter, transmission, driveline and rear drive axle.

Drivetrain Damper

A tuned weight attached to back of transmission, transfer case, or axle to absorb vibration.

Engine Imbalance

Some component in the engine which is normally smoothly balanced now causing a perceptible vibration in the vehicle.

Engine Misfire

One or more cylinders in the engine fails to fire at the proper time.

Engine Run-Up Test

Operation of engine through normal rpm range with vehicle standing still and transmission in neutral. Used for engine and accessory vibration check.

Flexible Coupling

A flexible joint in the exhaust pipe located between the catalytic converter and muffler, designed to eliminate binding conditions in the exhaust system and eliminate exhaust NVH.

Float

A cruising drive mode in which throttle setting matches engine speed to road speed between cruise and coast.

Gravelly Feel

A grinding or growl in a component, similar to the feel experienced while driving on gravel.

Harshness

A harder than usual behavior of a component, like riding a vehicle with overinflated tires.

Hose Clamp

Screw-type hose clamp.

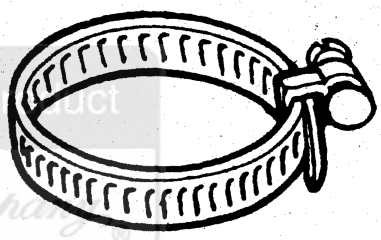

F2715-B

Hz

Hertz (cycles per second).

Imbalance

Out of balance; more weight on one side of a rotating component causing shake or vibration.

Inboard

Toward the centerline of the vehicle. See Outboard.

In-Phase

The in-line relationship between the forward coupling shaft yoke and the driveshaft centering socket yoke of a two-piece driveline.

Isolate

Separate from the influence of other components.

Knock

Caused by a gear tooth damaged on the drive side of the final drive ring gear which can be corrected by grinding the damaged area.

Neutral Engine Run-Up Test (NERU)

Operation of engine through normal rpm range with vehicle sitting still, transmission in neutral. Used for engine and accessory vibration check.

Official Licensed Product
Ford Motor Company

GLOSSARY OF TERMS (Continued)

Neutralize (Normalize)

To adjust to unstressed position. Used to describe various mounts and exhaust system hangers. See Bound Up.

NVH

Noise, vibration, harshness.

Outboard

Toward the outside of the vehicle rather than toward the centerline. See Inboard.

Pinion Shaft

The input shaft to a driving axle, usually a part of the smaller driving or input gear of a ring and pinion gearset.

Pumping Feel

A very slow vibration that results in a movement of vehicle components, similar to pumping the service brakes slightly.

Radial/Lateral

Radial is in the plane of rotation, lateral is at 90 degrees to the plane of rotation.

Ring Gear

The large gear, driven by the pinion gear of a ring and pinion driving axle gearset.

Road Test

Operation of vehicle under conditions designed to recreate the problem condition.

Runout

Out of round or wobble.

Shake

Low frequency vibration, usually results in visual movement of components.

Slip-Yoke (Slip-Spline)

Driveshaft coupling device (half of a U-joint) which compensates for changes in shaft length due to articulation of axle; used at one end of driveshaft.

Tip-In Moan

A light moaning noise heard when the vehicle is lightly accelerated, usually between 40-104 km/h (25-65 mph).

TIR

Total indicated runout.

Tire Deflection

Bending of the body of the tire during rotation.

Tire Force Vibration

Tire vibration caused by variations in the construction of the tire, resulting in a vibration when the tire rotates against the pavement. This condition may be present on perfectly round tires because of variations in the inner construction.

Tires — Flat Spots

Irregular tire wear patterns in the tire tread resulting from wheel-locked skids.

Two-Plane Balance

Radial and lateral balance.

Vibration

Unwanted excitation from a component that results in a sound or feel of movement.

ADJUSTMENTS

Balancing, Brake Drum

Rear brake drum imbalance can cause a vibration condition that sometimes cannot be compensated for by wheel balancing.

If rear brake drum imbalance is suspected, raise the rear end of the vehicle, taking proper precautions. Remove the rear wheel and tire assembly.

Before testing, reverse conical-type lug nuts and install all to retain the drums to axle flanges. If drums do not have balance weights, run the vehicle up to the speed where vibration occurred during road test.

If the drums exhibit out-of-balance symptoms, they should be removed from the vehicle and balanced as follows:

1. Position the brake drum on a bubble-type balancer and, noting the heavy side of the drum, place a wheel balance weight on the drum directly opposite the heavy point. Select the appropriate number of weights until the bubble balance indicates a balanced condition. Mark the location of the light side of the drum, and note the total amount of the balance weight needed to balance the drum.

   A drum that already has a balance weight attached, or requires less than 56.6 grams (2 oz.) of weight to balance, is not the prime cause of the vibration.

2. Fabricate a piece of mild steel to fit the curvature of the drum face and equal to the balance weights required to balance the brake drum (an old flywheel ring gear can be cut and used as a balance weight).

   A small postal scale may be used for determining the weight of both the balance weights used and the weight of the fabricated drum balance weight needed.

Official Licensed Product Ford Motor Company

ADJUSTMENTS (Continued)

3. **CAUTION: Under no condition should any other welding method be used other than arc welding. To prevent drum distortion, do not use a current setting of more than 100 amps.**

   Position the drum balance weight on the drum face in the location on the light side of the drum indicated, as shown. Arc weld (tackweld 6.35 mm [1/4 inch] long) the balance weight to the drum face.

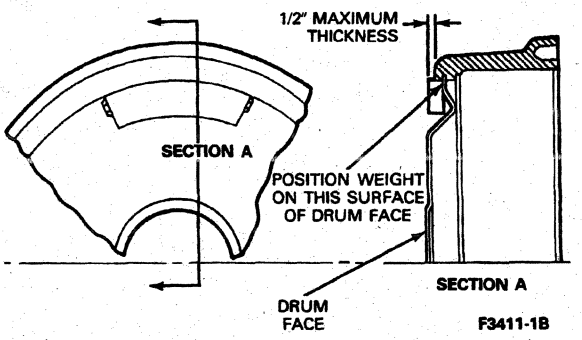

4. Recheck balancing.
5. Install the balanced drum on the vehicle.
6. Static balance both rear wheels and tires and install on vehicle.
7. Road test to verify condition.

Balancing, Driveshaft

Refer to Section 05-00 in the Powertrain, Drivetrain Manual.

Match Mounting Tires

Match mounting is a technique used to reduce radial or lateral tire runouts on tire and wheel assemblies. Excessive runout is a source of ride complaints and match mounting can be used to minimize the runout. There are two ways to use match mounting: positioning of the tire on the wheel and positioning the wheel on the hub.

1. Measure the total indicated runout on the center of the tire tread rib, and record it. Mark the tire and rim at the center of the tread rib, and record the reading. Mark the tire at the location of the valve stem for reference.
2. Break down the tire and remount it 180 degrees on the rim so that the valve stem reference mark is opposite the valve stem on the wheel.
3. Reinflate the tire and measure the total indicated runout, and again mark the high spot.
4. If the runout is reduced to acceptable guidelines, the tire is ready to be put back into service. If the runout is still excessive, one of the following steps must be performed:
   a. If the high spot is within 102 mm (4 inches) of the first high spot on the tire, and is still outside of guidelines, replace the tire.
   b. If the high spot is within 102 mm (4 inches) of the first high spot on the wheel, the wheel may be out of tolerance. Check the wheel for runout.
   c. If the high spot is not within 102 mm (4 inches) of either original high spot of the tire and rim, then draw an arrow from the second high spot to the first high spot (in the shortest direction) and rotate the tire on the rim 90 degrees in that direction. This will normally reduce the runout to an acceptable level.

In the majority of cases, the first 180-degree turn of the tire will either fix the problem or indicate which item to replace.

Wheels, Distorted

Wheel vibration may be caused by distorted pilot holes or lug holes on the wheel. This does not allow sufficient clamp load between the lug nuts, the wheel and the rotor / hub. It may also be difficult to remove the distorted wheel from the vehicle or to place the wheel on the vehicle in a different location. To determine if a wheel has been damaged and should not be reused, refer to the following service procedure for details.

Inspect for Wheel Damage

1. Remove the wheel from the hub. If the wheel is difficult to remove, do not reuse the wheel.
2. Visually inspect the wheel for distortion (turned-up) scallops in the pilot hole. If the pilot hole is distorted, do not reuse the wheel.
3. Inspect the distorted lug holes by placing a lug nut in the lug hole cone seat of the wheel and inspect from the reverse side. If the lug protrudes through the lug hole, do not reuse the wheel.
4. Inspect the wheel mounting surface for distortion.
   a. Lay a straightedge across the mounting surface of the wheel (the surface of the wheel that makes contact with the rear brake drum or front rotor).
   b. The straightedge should contact the outer edge of the mounting surface, lying between the bolt holes and across the center of the pilot hole.
   c. The clearance between the straightedge and the pilot hole cannot exceed 0.762 mm (0.030 inch). The straightedge should not contact the pilot holes. If the clearance is more than 0.762 mm (0.030 inch) or the straightedge makes the contact with the pilot holes, do not reuse the wheel.

Ford Motor Company Licensed Publication

ADJUSTMENTS (Continued)

Install Wheel

1. Inspect lubricant on the studs and lug nuts.
2. If lubricants are present, clean thoroughly using naphtha or equivalent.
3. **CAUTION: When tightening lug nuts, excessive torque may cause distortion of the wheel. Inadequate torque may not provide adequate clamping force to assure wheel retention.**

   Tighten lug nuts to specifications using a torque wrench.

SERVICE PROCEDURES

Engine/Transmission Mounts, Neutralizing

1. Loosen, but do not remove, engine mount fasteners.
2. Start the engine and apply service brakes.
3. Shift transmission into drive and back into neutral.
4. Stop engine.
5. Retighten engine mounts.
6. Road test.

Exhaust System, Neutralizing

1. Neutralize the exhaust system to relieve strain on mounts which may be sufficiently bound up to transmit vibration as if grounded.
2. Make sure the system is warmed up to normal operating temperature, as thermal expansion could be the cause of a strain problem.
3. Loosen all hanger attachments and reposition hangers until they hang free and straight. This should include the steady rest rod from the exhaust system to the area of the rear engine (engine mount on some applications).
4. Loosen all flange joints and, with engine running, shift transmission from neutral to drive and back to neutral (or load engine with clutch) and retighten all hanger clamps and flanges (tighten the manifold-to-exhaust flange joint last).

   After neutralization, the rubber in the exhaust hangers should show some flexibility when movement is applied to the exhaust system.
5. Verify adequate clearance to prevent grounding at any point in the system. Road test the vehicle and if moan persists, refer to Pinpoint Test B in the Diagnosis and Testing portion of this section.

SPECIAL SERVICE TOOLS /EQUIPMENT

SPECIAL SERVICE TOOLS REQUIRED

Tool Number/ Description	Illustration
T63L-8620-A Belt Tension Gauge	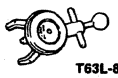 T63L-8620-A

SPECIAL SERVICE TOOLS DESIRED

Tool Number	Description
TOOL-4201-C	Dial Indicator with Bracketry

ROTUNDA EQUIPMENT

Model	Description
014-R1066	Offset Belt Tension Gauge

Official Licensed Product
Ford Motor Company

GROUP

BODY 01

SECTION TITLE	PAGE
BODY PANELS, FRONT END	01-02-1
BODY SERVICE	01-00-1
BUMPERS	01-19-1
DOOR LOCK CONTROL SYSTEM, ELECTRONIC	01-14B-1
DOORS, TAILGATE	01-03-1
GLASS, FRAMES AND MECHANISMS	01-11-1
HANDLES, LOCKS, LATCHES AND MECHANISMS	01-14A-1
INSTRUMENT PANEL AND CONSOLE	01-12-1
MIRRORS, REARVIEW	01-09-1
PICKUP BOX	01-04-1
RESTRAINTS, ACTIVE	01-20-1
SEATS AND TRACKS	01-10-1
TRIM, EXTERIOR	01-08-1
TRIM, INTERIOR	01-05-1
WIPER AND WASHER SYSTEMS	01-16-1

SECTION 01-00 Body Service

Official Licensed Product
Ford Motorcraft

SUBJECT	PAGE
VEHICLE APPLICATION	01-00-1
DESCRIPTION	
Body Sealer Types and Application	01-00-1
Caulking Cord	01-00-2
Liquid Butyl Sealer	01-00-2
Silicone Lubricant	01-00-2
Weatherstrip Adhesive	01-00-2
DIAGNOSIS AND TESTING	
Body	01-00-2
Inspection and Verification	01-00-2
Leaks	01-00-2
Noise	01-00-2
Symptom Chart	01-00-3
SERVICE PROCEDURES	
Body Sealant Locations	01-00-3
Chemical or Organic Damage Repair	01-00-4
SERVICE PROCEDURES (Cont'd.)	
Dust and Water Leaks	01-00-3
Paint Damage from Airborne Materials	01-00-4
Rattle Elimination	01-00-3
Repainting	01-00-5
Drying Paint Repair Work	01-00-5
Respray Sequence, Methodical	01-00-5
Wind Noise	01-00-3
CLEANING AND INSPECTION	
Drain Holes	01-00-6
Floorpan Plugs and Grommets	01-00-6
Rattle Elimination	01-00-6
Trim	01-00-6
SPECIFICATIONS	01-00-6
SPECIAL SERVICE TOOLS/EQUIPMENT	01-00-7

VEHICLE APPLICATION

F-250 Heavy Duty, F-350 and F-Super Duty Chassis Cab

DESCRIPTION

Body Sealer Types and Application

While many sealers are used during vehicle assembly, the following all-purpose sealers have been selected for service use.

DESCRIPTION (Continued)

Liquid Butyl Sealer

Liquid Butyl Sealer C9AZ-19554-B (Black) or equivalent meeting Ford specification ESB-M4G162-A does not run, is fast drying, and remains semi-elastic. The sealer can be used for seam sealing in such areas as the floorpan, wheelhouse, dash panel, running board, door openings and drip rails. It can also be used to seal outside moulding clip holes and for windshield and rear window installation.

Caulking Cord

Caulking Cord D6AZ-19560-A or equivalent meeting Ford specification ESB-M4G32-A has a plastic base with a filler, is heavy bodied, and is commonly known as perma-gum. It is used on spot-weld holes, around mounting clips and between two surfaces not sealed by a gasket.

Weatherstrip Adhesive

Weatherstrip Adhesive E8AZ-19552-A or equivalent meeting Ford specification ESB-M2G14-A is a quick-drying, strong adhesive designed to hold weatherstripping to doors, bodies, cowl ventilators and the surrounding metal. Windows and windshields that are set in rubber can be effectively sealed against leakage by flowing adhesive into affected areas.

Silicone Lubricant

Silicone Lubricant COAZ-19553-AA (jelly) or equivalent meeting Ford specification ESR-M13P4-A is to be used on the door and window weatherstrips. It is recommended that silicone lubricant be applied to the weatherstrips at every lubrication period. Its use makes the doors easier to close, avoids weatherstrip squeaks, retards weatherstrip wear due to chafing between the door glass upper frame and the weatherstrip, and helps to retain door window alignment by reducing friction between the glass frame and rubber weatherstrip.

DIAGNOSIS AND TESTING

Body

Inspection and Verification

Leaks

Forward vehicle motion creates a slight vacuum within the body, particularly if a window or ventilator is partially open. Any unsealed crevice or small opening in the lower section of the body will permit air to be drawn into the body. If dust is present in the air, it will follow.

Under certain conditions, water can enter the body at any point where dirt or dust can enter. Any consideration of water leakage must take into account all points covered under dust leaks.

To determine the exact location of a dust leak, remove the following trim from the cab: the cowl trim panel, the kick pads, and the floor mats.

Removal of the trim will reveal the location of most leaks. Seal these leaks, and road test the vehicle on a dusty road to make sure all leaks are sealed. Dust entry is usually indicated by a pointed shaft of dust or silt at the point of entrance. After the road test, check for indications of a dust pattern around the door openings, cowl panel, and cowl side panel.

Sometimes leaks can be located by putting bright lights under the vehicle, with the above components removed, and checking the interior of the body at joints and weld lines. The light will show through where leaks exist.

Noise

Wind noise, rattles and their sources are detected by driving the vehicle at highway speeds in four different directions. Listen for sources of noise with all windows closed, radio off, heater and air conditioner blower motor turned off and ventilation ducts open. A stethoscope can be used to pinpoint the source of wind noise.

Most wind noise-producing leaks will occur at the door and window seals or at sheet metal joints in the door or the door opening in the body.

Official Licensed

DIAGNOSIS AND TESTING (Continued)

Symptom Chart

BODY SERVICE

Condition	Possible Source	Action
• Dust Leak	• Cowl trim panel, kick pads, and floor mats.	• REMOVE trim. CHECK for leaks and SEAL with appropriate sealer. ROAD TEST for leaks. RECHECK trim for leaks, or use light under vehicle with trim removed. CHECK interior of body at joints and weld lines.
• Dust / Water Leaks at Floorpan and Grommets	• Missing or damaged plugs or grommets.	• CHECK plugs for proper installation.
• Drain Holes Collecting Water	• Holes clogged with mud or road tar.	• CHECK drain holes regularly. CLEAN drain holes of dirt and foreign material with a punch or screwdriver.
• Wind Noise, Air Entering Vehicle Through Small Holes in Body	• Leaks at door and window seals or sheet metal joints in doors or door openings.	• SEAL leaks with RTV sealant and foam tape. ROAD TEST. PINPOINT source of wind noise.
• Rattles	• Loose screws, nuts, bolts, small pieces of body deadener in door wells, pillars and quarter panels. • Misalignment. • Weatherstripping and anti-squeak material has slipped out of position.	• CHECK doors by carefully striking underside of door with a mallet. LISTEN for loose objects in door. REPAIR. TIGHTEN body bolts and screws. • REFER to Section 01-03 for adjustment and alignment procedures. • APPLY additional cement or other adhesive. INSTALL in proper location to eliminate rattle.

Official Licensed Product
Ford Motor Company

SERVICE PROCEDURES

Dust and Water Leaks

After trim removal has revealed the location of leaks, seal these leaks, and road test the vehicle on a dusty road to make sure all leaks are sealed. Dust entry is usually indicated by a pointed shaft of dust or silt at the point of entrance. After the road test, check for indications of a dust pattern around the door openings, cowl panel, and cowl side panel.

Sometimes leaks can be located by putting bright lights under the vehicle, with the above components removed, and checking the interior of the body at joints and weld lines. The light will show through where leaks exist.

Seal all leaks with RTV sealant and foam tape or by positioning or replacing the seals. Road test the vehicle to make sure all leaks have been adequately sealed.

Wind Noise

Air entering or exiting the vehicle through small openings in the body can result in wind noise. Sources of wind noise are detected by driving the vehicle at highway speeds in four different directions. Listen for sources of wind noise with all the windows closed, radio off, heater and air conditioner blower motor turned off and ventilation ducts open. A stethoscope can be used to pinpoint the source of the noise.

Most wind noise-producing leaks will occur at the door and window seals or at sheet metal joints in the door or the door opening in the body.

Rattle Elimination

All bolts and screws should be tightened periodically. In the event that tightening the bolts and screws located on such assemblies as the doors, hood and tailgate does not eliminate the rattles, follow the adjustment and alignment procedures for these assemblies.

Rattles and squeaks are sometimes caused by weatherstripping and anti-squeak material that has slipped out of position. Apply additional cement or other adhesive.

Body Sealant Locations

The body sealant locations are:

- floorpan
- quarter wheelhouse inner panel and quarter wheelhouse outer panel
- dash panel

SERVICE PROCEDURES (Continued)

- running boards
- door openings
- roof side drip rail

Paint Damage from Airborne Materials

The following information gives detailed descriptions of paint damage caused by chemical or organic materials. If service is required, identify the source of the damage and follow the recommended service procedure.

Chemical

The effects of chemical airborne materials can be seen as:

- dark blotches in the paint where the pigment in the paint surface has been attacked.
- irregular spots that are cracked or etched around the edges and dull in the centers.
- small orange colored spots caused by iron particles on the paint surface.

Generally, materials that attack a paint film are either acidic or alkaline in nature.

Sulfuric and nitric acids, in general, cause extreme damage to automotive paint finishes. Even very small concentrations of the same materials can cause chemical spotting damage. Due to evaporation and condensation, these acids can create severe etching spots that might eventually crack or lift the paint film after some time in service.

Although some automotive finishes are more resistant than others, none are completely immune to these chemicals. The most resistant paints used today are the urethanes because their resin system is least likely to react with chemicals. Air-dry coatings are more susceptible to attack when they are fresh. The longer the paint dries the more resistant it becomes.

The following pH chart shows the relationship between acidic and alkaline chemicals and their corresponding pH values. This chart is provided for informational reference only.

ACIDS/ALKALIES AND pH CHART

pH Scale Value	Examples
2.0 — Very Strong Acids	Hydrochloric, Nitric Sulfuric, Phosphoric, Hydrofluoric and Some Wire Wheel Cleaners
3.0 — Strong Acids	Citric, Chromic, Sulfonic, and Human Gastric Juices
4.0 — Acidic	Oxalic, Gluconic, Tartaric Fallout Remover
5.0 — Slightly Acidic	Lactic, Uric, Acid Rain
6.0 — Very Slightly Acidic	Carbonic
7.0 — Neutral	Blood, Most Body Fluids, Distilled Water
8.0 — Very Slightly Alkaline	Urine, Wash Concentrate

(Continued)

ACIDS/ALKALIES AND pH CHART (Cont'd)

pH Scale Value	Examples
9.0 — Slightly Alkaline	Baking Soda
10.0 — Alkaline	Soda Ash, Carb-Kleen
11.0 — Strong Alkaline	Lye, Potash, Tire Cleaner

Organic

Organic damage is generally easier to identify. Organic damage is mostly due to tree sap, bird and insect droppings, dead insects and pollen. Tree sap is easily identified by clear, raised drops that may be hard or sticky. Bee or bug dropping spots may appear brownish or yellow in color, about 3.1-6.3 mm (1/8-1/4 inch) in diameter. Dead and decomposing insect bodies are readily visible to the eye. Pollen deposits are small yellow clusters. Each of these items is potentially damaging to any currently available paint system. Other noticeable traits of organic damage are spots that are raised (swelling), micro-crazing (cracking) and pitting due to pollen eating into the paint film. The active ingredients in most organic contaminants are tannic and formic acids. These acids are found in berries and bodily fluids of insects and birds.

Investigations completed at dealerships show that the bright lot lights tend to attract insects. The use of soft lights for display and storage lot illumination will help reduce damage resulting from decomposing bugs and droppings by decreasing the number of bugs attracted to these lights. Organic damage is accelerated by heat. During very hot weather conditions, it is important to wash vehicles more often.

Chemical or Organic Damage Repair

Iron dust particles and other industrial fallout can become embedded into the paint film. After some weathering, tiny dots of rust that feel rough to the touch or irregular discoloration may begin to appear. This type of paint damage is difficult to repair. Use the following procedure to remove these particles and contaminants.

WARNING: THE TECHNICIAN MUST WEAR PROTECTIVE CLOTHING AND EYE PROTECTION TO PREVENT SKIN IRRITATION.

CAUTION: Any changes to this procedure will cause an incomplete or unsatisfactory repair and can result in possible damage to the painted surfaces and trim.

CAUTION: The use of any other product or procedure can cause damage to aluminum, flexible painted surfaces or other painted surfaces. Follow directions exactly, and rinse thoroughly after each step.

NOTE: This procedure must be performed before any buffing, polishing, color sanding or refinishing is attempted. The materials in this procedure are alkaline, acidic and neutral. They must be used in the specified order.

SERVICE PROCEDURES (Continued)

NOTE: This decontamination procedure is designed to remove surface contaminants from the paint on vehicles that have been contaminated up to 120 days. Vehicles that have experienced the condition longer than this period may require an additional treatment to remove metal contaminants.

1. NOTE: Ford does not recommend the use of oxalic acids or other fallout removal products. Use Finish Kare, Inc., products 1119, 883, and 118SC to decontaminate the paint surface.

   Rinse off dust and debris with cold water. Be sure to start at the bottom of vehicle and work up.
2. Prepare product 1119 by mixing one part product 1119 with four parts cold water.
3. Use clean wash mitt and apply mixture to entire vehicle, starting at the bottom and working up to the top surface. Keep car wet with the solution for 5 to 10 minutes. Do not allow it to streak down the sides. Rewipe with mitt, if necessary, to avoid streaks.
4. Rinse vehicle with cold water.
5. Dry the flat surface of the vehicle hood and roof.
6. NOTE: Product 883 is ready to use from the bottle. No mixing is necessary.

   Apply product 883 directly to the contaminated surfaces using a clean dry sponge, wash mitt or soft truck brush. Keep the areas wet with product 883 for 5 to 7 minutes. Do not allow to dry on vehicle. Wipe down to the body line on the sides.
7. Prepare product 118SC by mixing 0.03 liter (1 oz.) with 3.7 liter (1 gallon) of water.
8. NOTE: Do not apply shampoo with the same mitt that was used to apply product 883 or 1119. Always keep these mitts separate.

   Shampoo the vehicle with product 118SC mixture using a clean wash mitt. Rinse with cold water.
9. Inspect the paint surface to see if rust particles have been removed. If rust particles have been on the vehicle for a long period of time, it may be necessary to repeat each of the above steps. Acid rain discoloration or etching will require either buffing, color sanding or refinishing if etching is visible.

Correction of Paint Surface Following Decontamination

1. Use the buffing products from only one manufacturer. Do not intermix products.
2. Always follow the manufacturer's product sequence. Use appropriate pads with each product as recommended by the manufacturer.
3. Use Rotunda Dual Action Sander 107-R1619 or equivalent with a Velcro®-mount backing plate and appropriate foam pad for final polishing swirl removal.
4. Use an alcohol and water mixture (1 to 4 ratio) to clean buffed areas to verify removal of scratches and swirls before application of final protective glaze.

Repainting

1. Before attempting repainting, determine the surface and overall condition of the existing paint.
   a. Horizontal surfaces usually show the greatest surface deterioration. Carefully inspect the hood and roof to determine the overall condition of the paint.
   b. Clean the areas to be inspected and look carefully for any signs of surface deterioration or any other form of film breakdown, such as checking, cracking or humidity blistering. In particular, note the gloss level. Low gloss indicates surface irregularities caused by such defects as checking or blistering.
   c. Look for evidence of brittleness or poor adhesion, or excessive chipping. If in doubt about the condition of the paint, scrape the finish slightly with a penknife and examine further.
2. If a complete repaint job is necessary, plan a painting sequence, primarily for the sake of continuity, so as to avoid dry joint overlaps and minimize unnecessary work before beginning to spray.

Respray Sequence, Methodical

1. NOTE: Some state and local governments have specific health and safety regulations that recommend the use of special breathing apparatus when using finishing materials containing toxic products.

   Spray all locations that are not easily accessible (hood and hood edges, drain channels, door jambs). Keep doors slightly ajar to prevent sticking and permit efficient drying. The purpose of this initial spraying is to remove dust that otherwise might be blown about and adversely affect the exterior finishing operation.
2. Once the difficult access areas have been sprayed, begin painting the roof panel at the C-pillar, along the drip rail, to the A-pillar, then paint from the rail inward toward the panel center.
3. Move to the opposite side of the body. Pick up the wet paint edge by applying the paint from the center of the roof, continue outward and along the drip rail to the A-pillar, and finish the roof panel by spraying the C-pillar.
4. Extend the coat application down the C-pillar, then paint the entire body side, including the door and fender quarter.
5. Move across to the cowl side panel, hood and top of the opposite fender.
6. Continue down the fender and along the body side to include the door, quarter panel and C-pillar.
7. Paint the tailgate and back panels.

Drying Paint Repair Work

1. Cover turn signal indicator lamps, rear lamps and exterior mirrors when drying the vehicle at approximately 90°C (195°F).

SERVICE PROCEDURES (Continued)

2. If all openings caused by missing window frames, etc., are properly masked, it is not necessary to remove plastic parts from the interior of the vehicle, except perhaps the radio chassis.
3. Monitor the temperature of the passenger compartment. If the vehicle is equipped with a radio/tape player or digital audio compact disc player, do not allow the temperature to exceed 78°C (170°F).
4. Latch doors in the first catch to avoid distortion of the weatherstrips.

CLEANING AND INSPECTION

Floorpan Plugs and Grommets

Many plugs and grommets are used in the floorpan and dash panel. The floorpan plugs seal the various access holes. If any plugs are missing or improperly installed, a dust or water leak can result. This also applies to the grommets used on the dash panel. When dust or water leaks are evident, these plugs and grommets must be checked for proper installation.

Drain Holes

Drain holes are located on the underside of each door along the weld line of the inner and outer panels. If these holes become clogged with mud or road tars, water will collect inside the panels and rust the sheet metal from the inside. A sound of sloshing water in a door is an indication of this condition.

Check the drain holes regularly. Clean dirt and foreign material from the drain holes with a punch or screwdriver.

Rattle Elimination

Foreign objects such as nuts, bolts or small pieces of body deadener in the door wells, pillars and quarter panels, are often the source of rattles. Door wells can be checked by carefully striking the underside of the door with a rubber mallet.

All bolts and screws should be inspected periodically. In the event that tightening the bolts and screws, located on such assemblies as the doors, hood and tailgate does not eliminate the rattles, the trouble is probably caused by misalignment. If this is the case, follow the adjustment and alignment procedures for these assemblies.

Rattles and squeaks are sometimes caused by weatherstripping and anti-squeak material that has slipped out of position. Apply additional cement or other adhesive.

Trim

Periodic cleaning will preserve the beauty and life of bright metals. Wash with clear water or, if the parts are very dirty, use Multi-Purpose Cleaner Concentrate B8A-19523-AA or equivalent meeting Ford specification ESR-M14P4-A. Using a clean, soft cloth or a sponge and water, rinse and wipe the parts dry. Custom Bright Metal Cleaner 8A-19522-A or equivalent meeting Ford specification ESR-M5B194-B can be used sparingly to remove salt, road chemicals and corrosion deposits from chrome-plated parts. Do not scour aluminum or chrome-finished parts with steel wool or polish them with products containing abrasives. Custom Silicone Gloss Polish B7AZ-19530-AA or equivalent meeting Ford specification ESR-M11B26-A provides excellent protection for all bright metal parts.

SPECIFICATIONS

LUBRICANT/ADHESIVE/CLEANER SPECIFICATIONS

Description	Part Number	Ford Specification
Liquid Butyl Sealer	C9AZ-19554-B (Black)	ESB-M4G162-A
Caulking Cord	D6AZ-19560-A	ESB-M4G32-A
Weatherstrip Adhesive	E8AZ-19552-A	ESB-M2G14-A
Silicone Lubricant	COAZ-19553-AA	ESR-M13P4-A
Multi-Purpose Cleaner Concentrate	B8A-19523-AA	ESR-M14P4-A
Custom Bright Metal Cleaner	8A-19522-A	ESR-M5B194-B
Custom Silicone Gloss Polish	B7AZ-19530-AA	ESR-M11B26-A

Official Licensed Product

SPECIFICATIONS (Continued)

SEALER SPECIFICATIONS

Item	Sealer Code No.	Container	Ford Specification No.	Recommended Proprietary Brand
Body Schutz Spray Putty	1	400g Aerosol Pack	—	3M Part No. 8883
Body Schutz Spray Putty	1	1 Liter Spray Pack	—	3M Part No. 6923
Black PVC Adhesive Tape (1-In. Width)	2	50 m Roll	ESB-M3G-10A	—
Black PVC Adhesive Tape (2-In. Width)	3	50 m Roll	ESB-M3G-10A	—
Drip Check Sealer	4	150 m Tube	—	3M Part No. 1918
Metal Joint Sealer	5	300 ml Cartridge	ESB-M4G-133A	3M Part No. 5528
2695 Clear Sealer	6	500 ml Can	ESB-FM2G-1022A	Beta 2695

SPECIAL SERVICE TOOLS/EQUIPMENT

PAINT SERVICE PRODUCTS

Procedure	Service Product[a]	Equivalent Service Product[b]	Equivalent Service Product[c]
Decontamination	1119, 883, 118SC	None	None
Coarse Compounds	340 Compound, FK-7503G Pad	Imperial Micro-Finishing Compound	No. 4 Heavy, No. 1 Medium, No. 2 Light
Light	338 Compound, FK-7503G Pad	Finesse-It II Finishing Compound	No. 4 Heavy, No. 1 Medium, No. 2 Light
Polish	330, FK-8110G Pad, FK-2500G Pad	Perfect-It Foam Polishing Pad Glaze	No. 9
Protectant	218 or 2180	Imperial Hand Glaze	No. 9 or No. 7
Color Sanding Lubricant	780 Sand Lube	None	None

a Finish Kare, Inc., Customer Service, (818) 443-8983.
b 3M, (800) 364-3577.
c Meguiar's, Customer Service, (800) 347-5000.

ROTUNDA EQUIPMENT

Model	Description
107-R1619	Dual Action Sander

SECTION 01-02 Body Panels, Front End

SUBJECT	PAGE
VEHICLE APPLICATION	01-02-1
REMOVAL AND INSTALLATION	
Fender and Apron, Front	01-02-5
Hood Latch	01-02-2
Installation	01-02-3
Hood Latch Control Handle and Cable	01-02-3
REMOVAL AND INSTALLATION (Cont'd.)	
Radiator Grille	01-02-1
Radiator Grille Opening Panel Reinforcement	01-02-9
SPECIFICATIONS	01-02-10

VEHICLE APPLICATION

F-250 Heavy-Duty, F-350 and F-Super Duty

REMOVAL AND INSTALLATION

Radiator Grille

Removal

1. Open hood (16612).
2. Remove three screws securing radiator grille (8200) to front valance panel (17626) from the front of the vehicle.
3. Remove four screws from the top of the radiator grille securing the radiator grille to the radiator grille opening panel reinforcement (8A284).
4. Remove radiator grille.

Installation

1. Follow removal procedure in reverse order.
2. Tighten screws to 1-2 N·m (9-18 lb-in).

Licensed Product Ford Motor Company

REMOVAL AND INSTALLATION (Continued)

Radiator Grille

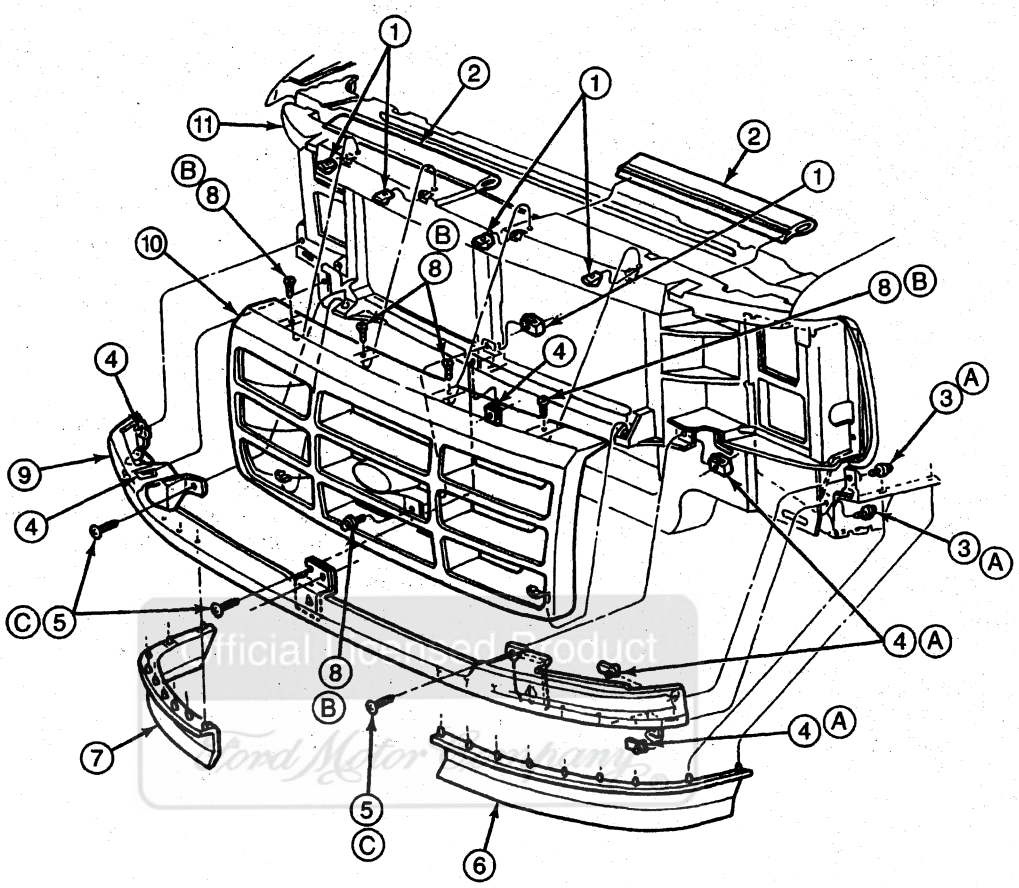

Item	Part Number	Description
1	N806851-S100	Nut
2	8326	Radiator Air Deflector
3	N805230-S55	Screw
4	N623332-S100	Nut
5	N807260-S55	Screw
6	17E940	Front Bumper Stone Deflector Filler (LH)
7	17E902	Front Bumper Stone Deflector Filler (RH)
8	N801603-S55	Screw

(Continued)

Item	Part Number	Description
9	17626	Front Valance Panel
10	8200	Radiator Grille
11	8A284	Radiator Grille Opening Panel Reinforcement
A	—	Tighten to 6-8 N·m (53-71 Lb-In)
B	—	Tighten to 1-2 N·m (9-18 Lb-In)
C	—	Tighten to 4-9 N·m (35-80 Lb-In)

Hood Latch

Removal

1. Mark the location of the hood latch (16700) prior to removal to aid in positioning the new hood latch.
2. Remove the two screws attaching the hood latch and remove the hood latch.
3. Remove the small black cable retainer from the latch lever.
4. Snap cable bushing from hood latch and pull looped cable strand away from hood latch lever button.

REMOVAL AND INSTALLATION (Continued)

Installation

1. Attach looped cable strand around hood latch lever button. Snap cable bushing to hood latch housing and snap cable retainer clip over hood latch lever button.
2. Position the hood latch over the previously marked hood latch location and snug attaching screws to hold latch in position.
3. Lower the hood (16612) slowly over the hood latch to visually inspect the latch-to-striker alignment. Tighten the attaching screws to 22-34 N·m (16-25 lb-ft).
4. NOTE: The hood latch should never be used to align the hood to front fender (16005) or cowl top.

   Open and close the hood several times to make sure the latch and safety catch fully engage with the striker. If full engagement is not obtained, loosen the hood latch attaching screws and reposition the latch to obtain full engagement. Then retighten the attaching screws.
5. Lubricate the latch handle pivot, latch pawls and springs with Multi-Purpose Grease Spray D7AZ-19584-AA or equivalent meeting Ford specifications ESR-M1C159-A and ESB-M1C106-B. Make sure lubricant has effectively worked into the pivot points and bearing surfaces. The hood latch should be lubricated every six months for smooth operation.

Hood Latch Control Handle and Cable

Removal

1. From inside vehicle, open hood (16612). If cable is broken, reach through radiator grille (8200) and behind hood latch (16700) to pull on latch lever.
2. Remove two screws securing hood latch to radiator support assembly and take off hood latch assembly with attached cable.
3. Unhook hood latch cable from stud on hood latch lever.
4. Pry out hood latch cable grommet from notch in hood latch.
5. Inside vehicle, remove left-hand cowl side trim panel (02344).
6. Remove two screws securing hood latch control handle and cable (16916).
7. With help of assistant to route cable in engine compartment, remove hood latch control handle and cable from inside cab.

Installation

1. Follow removal procedure in reverse order.
2. Tighten cable and handle assembly screws to 3-4 N·m (27-35 lb-in).
3. Adjust hood latch and tighten screws to 22-34 N·m (16-25 lb-ft).

Ford Motor Company Licensed Product

REMOVAL AND INSTALLATION (Continued)

Hood Latch and Cable Assembly

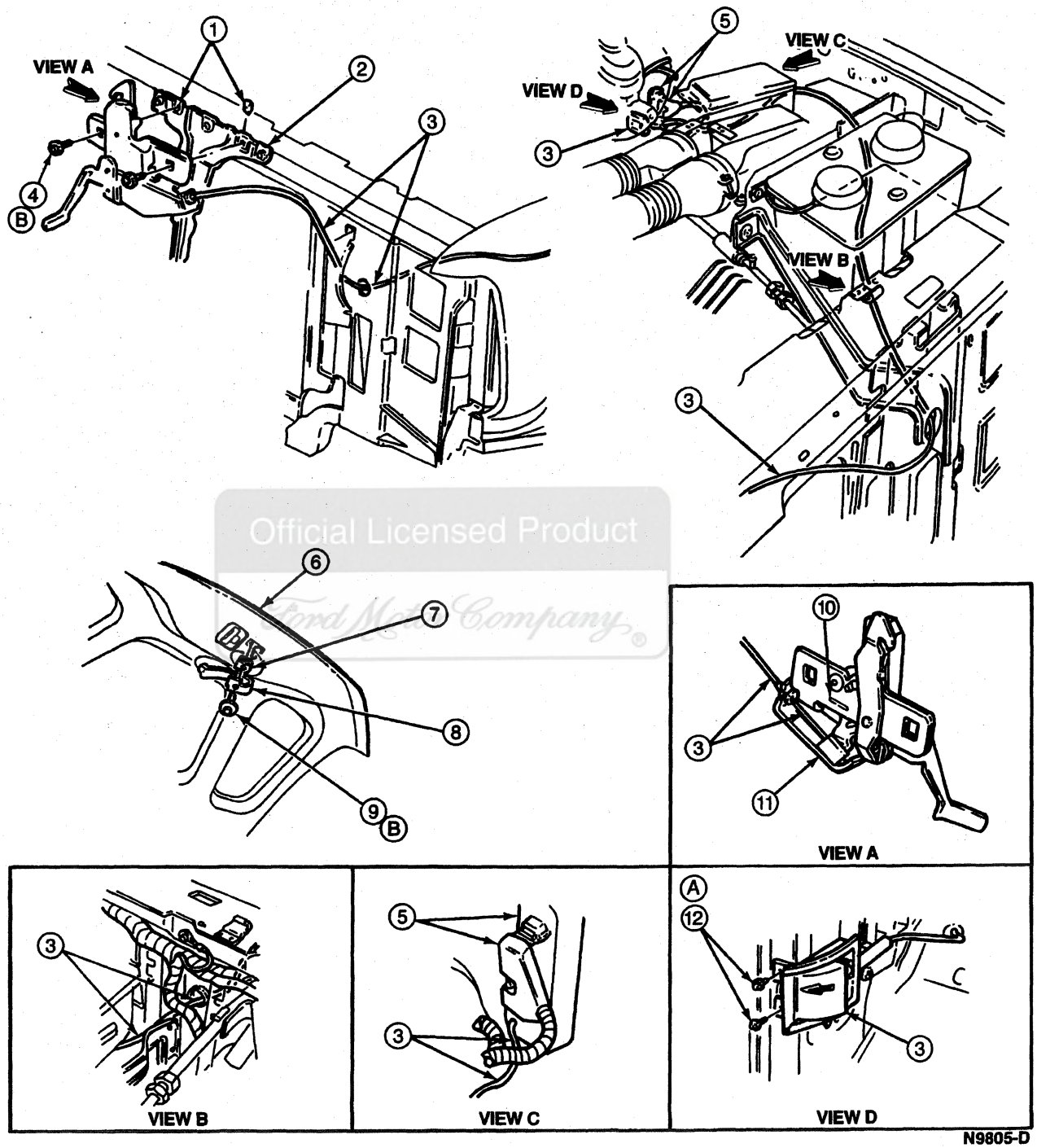

Official Licensed Product
Ford Motor Company

Item	Part Number	Description
1	N804222-S100	U-Nut
2	16747	Hood Latch Support Brace
3	16916	Hood Latch Control Handle and Cable

(Continued)

Item	Part Number	Description
4	N803878-S307	Screw and Washer
5	12A650	Powertrain Control Module
6	16612	Hood
7	N623333-S100	U-Nut

(Continued)

REMOVAL AND INSTALLATION (Continued)

Item	Part Number	Description
8	16C644	Hood Assist Spring
9	N606688-S43B	Screw and Washer
10	16907	Hood Latch Control Clip
11	16700	Hood Latch

(Continued)

Item	Part Number	Description
12	N802141-S58	Screw and Washer
A	—	Tighten to 3-4 N·m (27-35 Lb-In)
B	—	Tighten to 22-34 N·m (16-25 Lb-Ft)

Fender and Apron, Front

Removal

1. Clean all dirt from screws, bolts and nuts retaining front fender (16005).
2. Remove hood assist spring (16C644) from front fender.
3. Remove headlamps (13008) from the vehicle. Refer to Section 17-01.
4. Remove the screws retaining front fender to radiator support (16138).
5. Remove one screw retaining the lower end of front fender to lower corner of cab.
6. Remove one screw from inside cab retaining the lower end of front fender to cowl.
7. Remove screws retaining front fender to cowl extension.
8. Remove screws around wheelhouse opening retaining front fender to front fender apron (16054).
9. Remove bolts retaining battery tray (10732) to front fender (right side only) and bolts attaching auxiliary battery tray or tool box (left side only) (both R.P.O.).
10. Remove hood latch cable from left front fender and main wiring harness from right front fender.
11. Remove screws retaining hood assist spring to front fender. Remove front fender.

Installation

1. Position nuts and retainers to front fender.
2. Apply sealer to upper edge of front fender apron.
3. Position front fender to front fender apron, and install screws loosely.
4. From inside the cab, loosely install screw retaining front fender to cowl.
5. Install screw retaining the lower end of front fender to lower corner of cab.
6. Loosely install screws retaining front fender to radiator support.
7. Loosely install screw retaining front fender to cowl extension.
8. Install hood latch cable to left front fender and main wiring harness to right front fender.
9. Loosely install the bolts retaining the battery tray to front fender (right side only) and bolts attaching auxiliary battery tray or tool box (left side only) (both R.P.O.).
10. Adjust front fender, and tighten all mounting screws and bolts to specifications listed at the end of this section.
11. Install hood assist spring to the front fender.
12. Install headlamps. Refer to Section 17-01.

Official Licensed Product
Ford Motor Company

REMOVAL AND INSTALLATION (Continued)

Front Fender Installation

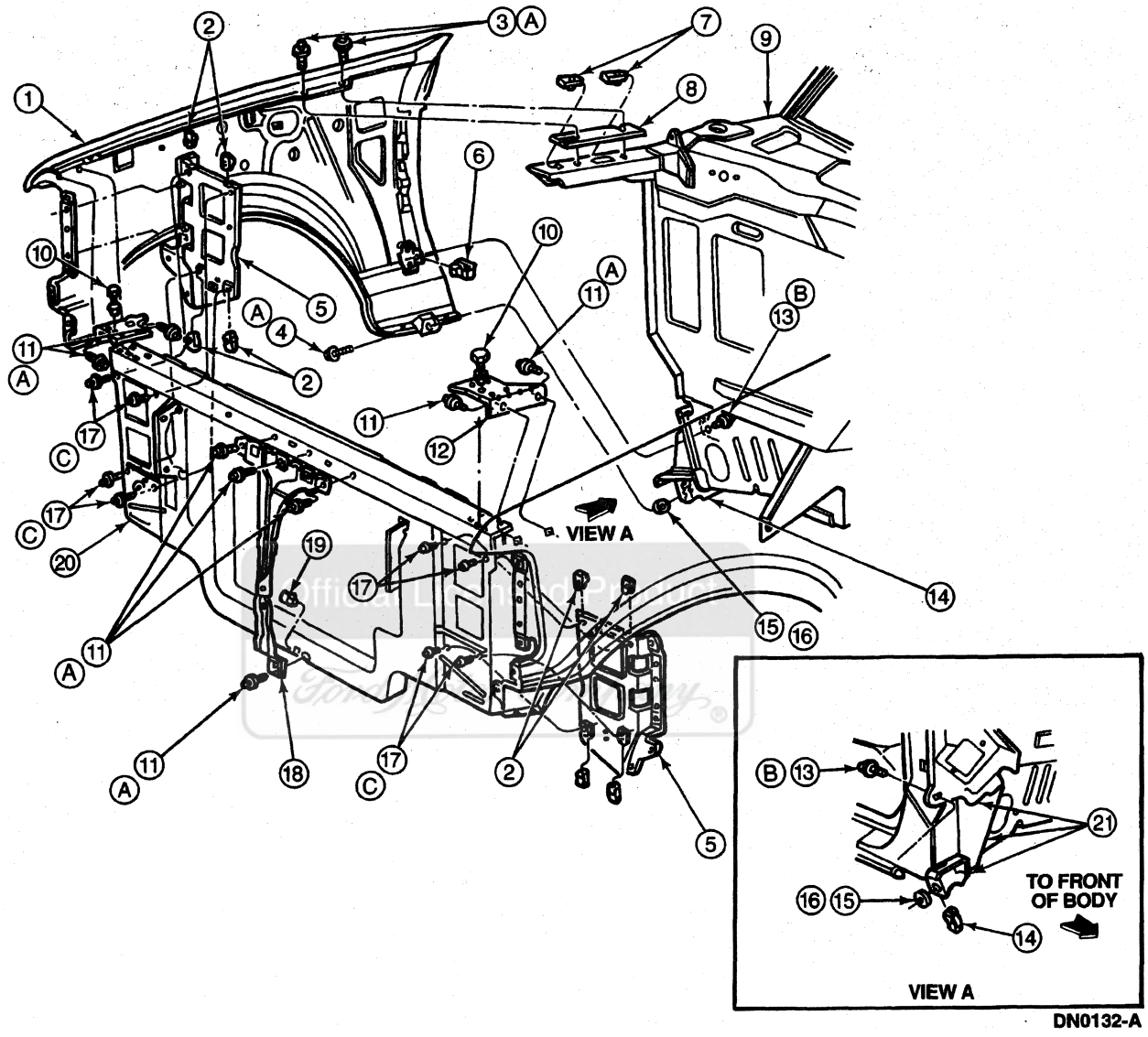

Item	Part Number	Description
1	16005	Front Fender
2	N800854-S100	Nut
3	N802984-S55	Bolt
4	N803506-S36	Bolt
5	16C198	Bracket Assy
6	N800296-S101	U-Nut
7	N801107-S100	Nut
8	16D162	Front Fender Shim
9	02012	Cowl Top Outer Panel
10	16K808-B	Nut
11	N606688-S55	Screw and Washer

(Continued)

Item	Part Number	Description
12	16B072	Front Fender Radiator Support Reinforcement
13	N803506-S36	Bolt
14	N800538-S100	Nut
15	N801256-S36	Washer
16	44725-S2	Washer (Optional)
17	N805230-S55	Screw and Washer
18	16747	Hood Latch Support Brace
19	N623332-S100	Nut
20	16138	Radiator Support
21	—	Dash Panel

(Continued)

REMOVAL AND INSTALLATION (Continued)

Item	Part Number	Description
A	—	Tighten to 24-31 N·m (18-23 Lb-Ft)

(Continued)

Item	Part Number	Description
B	—	Tighten to 12-18 N·m (106-160 Lb-In)
C	—	Tighten to 9-14 N·m (80-124 Lb-Ft)

Official Licensed Product
Ford Motor Company

REMOVAL AND INSTALLATION (Continued)

Front Fender Apron Installation

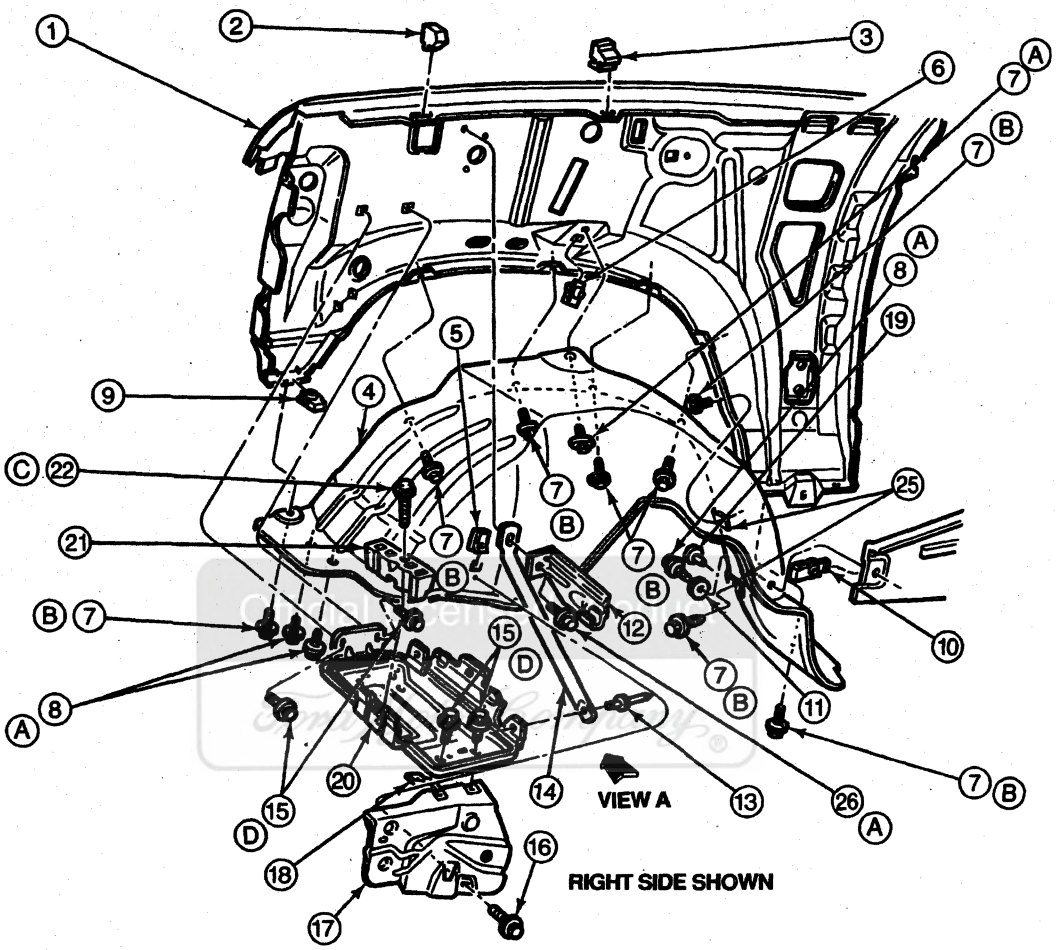

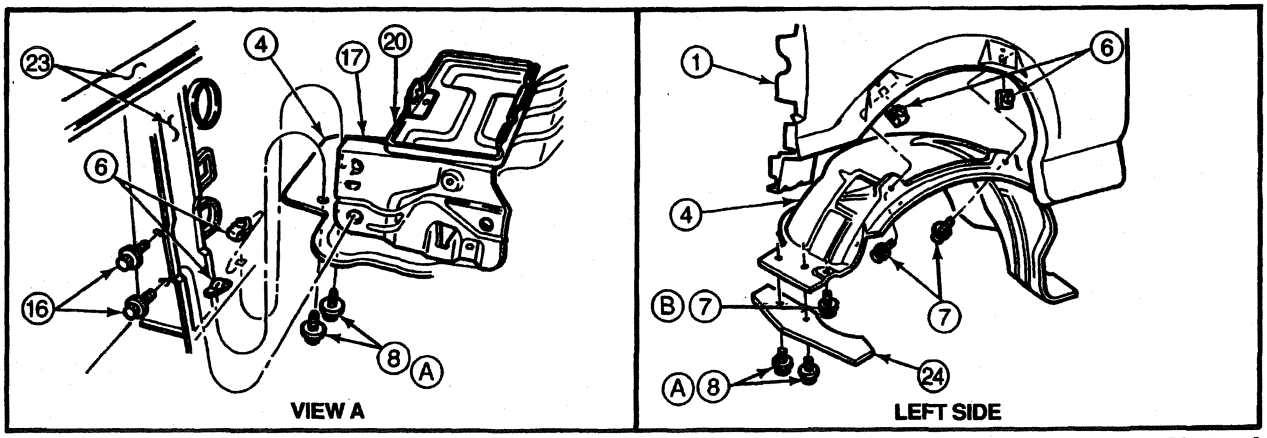

DN0133-A

Item	Part Number	Description
1	16005	Front Fender
2	N808094-S	Hood Bumper

(Continued)

Item	Part Number	Description
3	N80895-S	Hood Bumper
4	16054	Front Fender Apron

(Continued)

REMOVAL AND INSTALLATION (Continued)

Item	Part Number	Description
5	N623333-S100	Nut
6	N623332-S100	Nut
7	N800322-S55	Screw
8	N800576-S55	Bolt
9	45257-S100	U-Nut
10	N800925-S100	U-Nut
11	358870-S36B	Washer
12	17A140	Jack Handle Retainer Bracket
13	382707-S	Rivet
14	10N697	Battery Tray Brace
15	N803506-S55	Bolt
16	N807907-S36	Bolt
17	10A812	Battery Tray Support Reinforcement
18	N800296-S100	Nut

(Continued)

Item	Part Number	Description
19	388930-S	Pushpin
20	10732	Battery Tray
21	10718	Battery Hold Down Clamp
22	N803471-S55	Screw and Washer
23	16138	Radiator Support
24	9F271	Front Air Deflector
25	384816-S100	U-Nut
26	N807260-S55	Screw and Washer
A	—	Tighten to 9-14 N·m (80-124 Lb-In)
B	—	Tighten to 1-2 N·m (9-18 Lb-In)
C	—	Tighten to 8-12 N·m (71-106 Lb-In)
D	—	Tighten to 22-34 N·m (16-25 Lb-Ft)

Radiator Grille Opening Panel Reinforcement

Removal

1. Open hood (16612) and suitably support.
2. Remove headlamp door. Refer to Section 01-08.
3. Remove radiator grille (8200).
4. Remove screw(s) and washer(s) retaining radiator grille opening panel reinforcement (8A284) to front fender body (16015).
5. Remove screws and washers retaining radiator grille opening panel reinforcement to radiator grille opening panel bracket.
6. Remove radiator grille opening panel reinforcement.

Installation

1. Follow removal procedure in reverse order.
2. Tighten front fender body retaining screws and washers to 9-14 N·m (80-124 lb-in).
3. Tighten panel bracket screws to 9-14 N·m (80-124 lb-in).

Official Licensed Product Ford Motor Company

REMOVAL AND INSTALLATION (Continued)

Radiator Grille Opening Panel

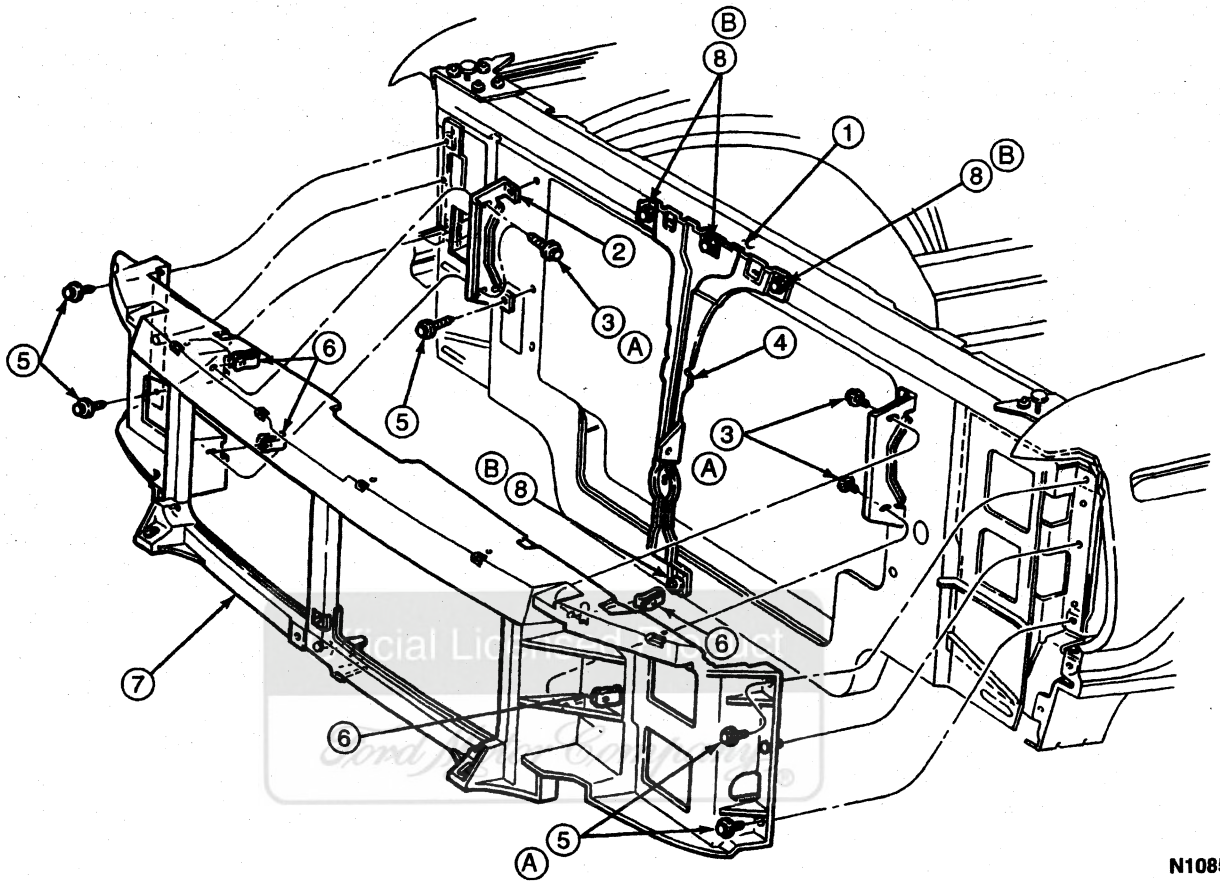

N10855-C

Item	Part Number	Description
1	16138	Radiator Support
2	8B455	Radiator Grille Opening Panel Bracket
3	N805230-S55	Screw and Washer (2 Req'd Each Side)
4	16747	Hood Latch Support Brace
5	N805230-S55	Screw and Washer (2 Req'd Each Side)

(Continued)

Item	Part Number	Description
6	N805889-S100	U-Nut (2 Req'd Each Side)
7	8A284	Radiator Grille Opening Panel Reinforcement
8	N606688-S55	Screw and Washer
A	—	Tighten to 9-14 N·m (80-124 Lb-In)
B	—	Tighten to 24-31 N·m (18-23 Lb-Ft)

SPECIFICATIONS

LUBRICANT/ADHESIVE/CLEANER SPECIFICATIONS

Description	Part Number	Ford Specification
Multi-Purpose Grease Spray	D7AZ-19584-AA	ESR-M1C159-A and ESB-M1C106-B

TORQUE SPECIFICATIONS

Description	N·m	Lb-Ft	Lb-In
Hood Hinge Screw(s) and Washer(s)	17-27	13-20	—
Hood Hinge Link Assembly to Fender Bolt	15-20	11-15	—
Hood Latch Control Handle and Cable Screw(s)	3-4	—	27-35

(Continued)

SPECIFICATIONS (Continued)

TORQUE SPECIFICATIONS (Cont'd)

Description	N·m	Lb-Ft	Lb-In
Fender to Radiator Support Screw(s) and Washer(s)	24-31	18-23	—
Fender to Cowl Extension Bolt(s)	24-31	18-23	—
Hood Latch Support Brace Screw	24-31	18-23	—
Dash Panel and Cowl Side Bolt	12-18	—	106-160
Fender Apron to Fender Screw(s)	1-2	—	9-18
Battery Tray to Fender Bolt(s)	22-34	16-25	—
Lower Apron to Fender Bolt(s)	9-14	—	80-124
Battery Hold-Down Screw(s) and Washer(s)	8-12	—	71-106
Radiator Grille Opening Panel Bracket Screw(s) and Washer(s)	9-14	—	80-124

(Continued)

TORQUE SPECIFICATIONS (Cont'd)

Description	N·m	Lb-Ft	Lb-In
Front Fender Bracket Screw(s) and Washers	9-14	—	80-124
Radiator Grille Screws	1-2	—	9-18
Front Valance Panel to Opening Panel Screws (Outboard)	6-8	—	53-71
Front Valance Panel to Opening Panel Screws (Inboard)	4-9	—	35-80
Hood Latch Screw and Washer	22-34	16-25	—
Hood Assist Spring Screw and Washer	22-34	16-25	—

Official Licensed Product
Ford Motor Company

SECTION 01-03 Doors, Tailgate

SUBJECT	PAGE
VEHICLE APPLICATION	01-03-1
REMOVAL AND INSTALLATION	
Door Latch Striker	01-03-2
Doors, Front and Rear	01-03-1
REMOVAL AND INSTALLATION (Cont'd.)	
Tailgate	01-03-2
SPECIFICATIONS	01-03-4

VEHICLE APPLICATION

F-250 Heavy Duty, F-350 and F-Super Duty

REMOVAL AND INSTALLATION

Doors, Front and Rear

Removal

1. Disconnect the battery ground cable (14301).
2. Remove any door trim necessary to access the electrical connector inside the front door (20124). Refer to Section 01-05.
3. Disconnect the electrical connector inside the front door and pull the wire harness out of the front door.
4. NOTE: When marking hinge locations, use a felt marker or equivalent. Do not scratch the paint.

   Mark the door hinge locations to aid installation alignment.
5. Support the front door.
6. Remove the lower door hinge-to-front door bolts.
7. Remove the upper door hinge-to-front door bolts.
8. Remove the front door from the vehicle.

Installation

1. Support the front door in position at the door hinges.
2. Align the door hinge-to-front door match marks made at removal and install the upper door hinge-to-front door bolts.
3. Align the door hinge-to-front door match marks and install the lower door hinge-to-front door bolts.
4. Align the front door.
5. Tighten the bolts to 26-35 N·m (19-26 lb-ft).
6. Feed the wire harness into the front door and connect the electrical connector.
7. Install any door trim previously removed.
8. NOTE: When the battery has been disconnected and reconnected, some abnormal drive symptoms may occur while the powertrain control module (PCM)(12A650) relearns its adaptive strategy. The vehicle may need to be driven 16 km (10 miles or more to relearn the strategy.

   Connect the battery ground cable.

Front Door

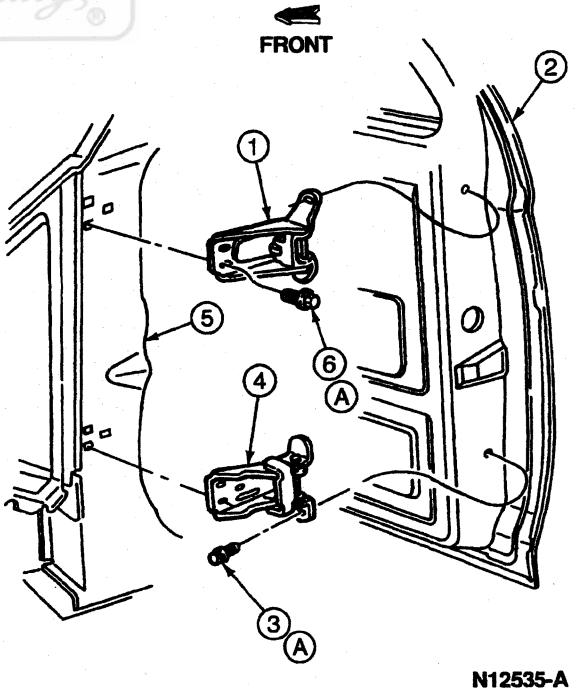

N12535-A

Item	Part Number	Description
1	22810	Door Hinge, Upper
2	20124	Front Door

(Continued)

REMOVAL AND INSTALLATION (Continued)

Item	Part Number	Description
3	N803417-S36	Bolt, Door Hinge-to-Front Door
4	22800	Door Hinge, Lower
5	02500	Front Body Pillar
6	N803417-S36	Bolt, Door Hinge-to-Front Body Pillar
A	—	Tighten to 26-35 N·m (19-26 Lb-Ft)

Rear Door, Crew Cab

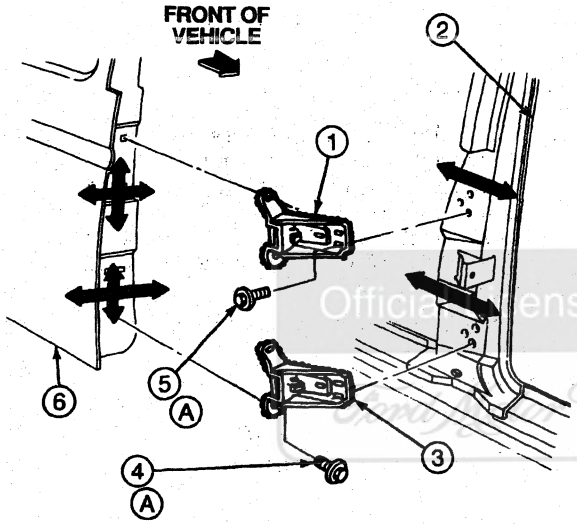

N5908-F

Item	Part Number	Description
1	26800	Rear Door Upper Hinge
2	28160	Quarter Latch Pillar
3	26802	Rear Door Lower Hinge and Check
4	N803417-S2	Door Hinge-to-Rear Door Bolt
5	N803417-S2	Door Hinge-to-Quarter Latch Pillar Bolt
6	24630	Rear Door
A	—	Tighten to 26-35 N·m (19-26 Lb-Ft)

Door Latch Striker

Removal

1. Using a Torx® bit, unscrew the door latch striker from the quarter latch pillar (28160).

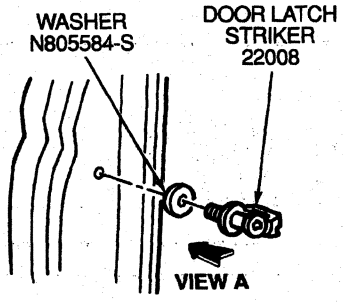

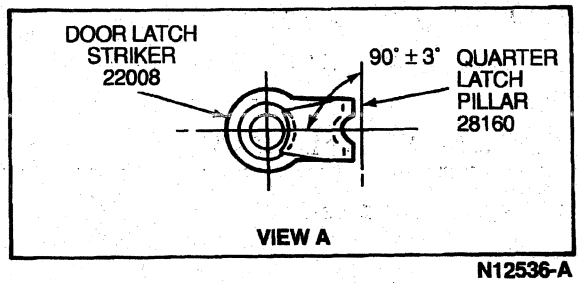

N12536-A

Installation

1. Using a Torx® bit, screw the door latch striker to the quarter latch pillar.
2. Align the door latch striker. Tighten the door latch striker to 40-50 N·m (30-37 lb-ft).

Tailgate

Removal

1. Remove check cables at pillar T-head pivots.
2. Lift the RH end of the tailgate off the hinge bracket, and remove the tailgate from the vehicle.

Installation

1. If a new tailgate is being installed, transfer all mouldings, latches, hinges, brackets, links, clips and washers onto new tailgate.
2. Lubricate tailgate retainer hinge cup as shown in the following illustration.
3. Insert LH end of tailgate in hinge bracket, then slide RH end of tailgate in hinge bracket.
4. Install check cables at pillar T-head pivots.

Official Licensed Product

REMOVAL AND INSTALLATION (Continued)

Tailgate Installation

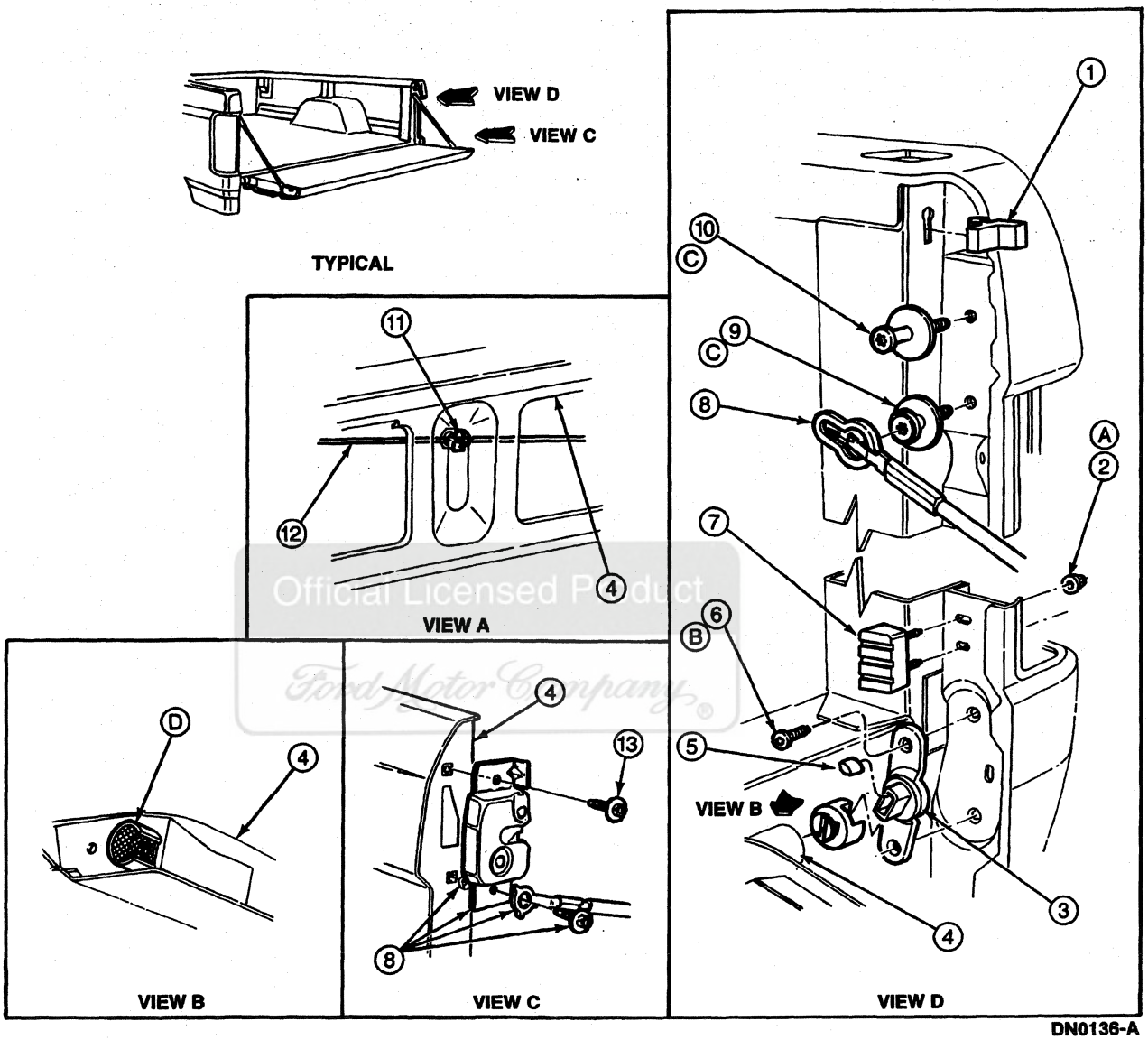

Item	Part Number	Description
1	44482	Tailgate Support Retaining Bumper
2	N621906-S54	Nut and Washer Assy
3	430B38	Hinge Bracket
4	40702	Tailgate
5	430B44	Hinge Insert
6	N804563-S100	Screw, Hinge Bracket-to-Body
7	402A10	Bumper Assy
8	43150	Tailgate Latch Assy
9	N805156-S39	Screw, Check Cable-to-Body

(Continued)

Item	Part Number	Description
10	432A06	Latch Striker
11	N805996-S	Clip, Latch Release Link
12	43868	Latch Release Link
13	N808267-S100	Screw and Washer
A	—	Tighten to 9-14 N·m (80-124 Lb-In)
B	—	Tighten to 35-55 N·m (26-41 Lb-Ft)
C	—	Tighten to 35-50 N·m (26-37 Lb-Ft)
D	—	Apply Lubricant to Inside Portion of Tailgate Retainer Hinge Cup.

SPECIFICATIONS

TORQUE SPECIFICATIONS

Description	N·m	Lb-Ft	Lb-In
Door Hinge-to-Body Bolt	26-35	19-26	—
Door Hinge-to-Door Bolt	26-35	19-26	—
Door Latch Striker	40-50	30-37	—
Tailgate Bumper Nut	9-14	—	80-124
Hinge Bracket-to-Body Nuts	35-55	26-41	—
Tailgate Hinge-to-Body Nuts	28-40	21-30	—
Check Cable-to-Body Screw	35-50	26-37	—

(Continued)

TORQUE SPECIFICATIONS (Cont'd)

Description	N·m	Lb-Ft	Lb-In
Check Cable-to-Tailgate	35-50	26-37	—
Tailgate Striker	35-50	26-37	—
Tailgate Counterbalance Torsion Bar Retainer-to-Body Bolts	28-40	21-30	—
Tailgate Torsion Bar Bracket Screws	8-15	6-11	—

Official Licensed Product
Ford Motor Company

SECTION 01-04 Pickup Box

SUBJECT	PAGE
VEHICLE APPLICATION	01-04-1
REMOVAL AND INSTALLATION	
Fender, Rear, F-350 with Dual Rear Wheels	01-04-2
Pickup Box, Styleside	01-04-1
ADJUSTMENTS	
Pickup Box Adjustments	01-04-4
ADJUSTMENTS (Cont'd.)	
Pickup Box Alignment	01-04-4
Pickup Box Lean	01-04-5
Shimming, Axle	01-04-6
Shimming, Pickup Box	01-04-6
SPECIFICATIONS	01-04-9

VEHICLE APPLICATION

F-250 Heavy Duty and F-350

REMOVAL AND INSTALLATION

Pickup Box, Styleside

Removal

1. Remove tailgate from pickup box. Refer to Section 01-03.
2. NOTE: Wiring assembly for the rear lamp (13404) must be rerouted through the rear lamp housing so the wiring does not interfere with the pickup box removal.

   Remove rear lamps from box. Refer to Section 17-01 for rear lamp removal and installation.
3. From underside of vehicle, remove six nuts retaining pickup box to frame rails.
4. Remove six bolts from pickup box. Note location of each bolt.
5. NOTE: Because of the weight of the pickup box, it may be necessary to have two people on each side of the box to facilitate removal.

   With aid of an assistant, lift pickup box enough to clear the frame and remove from vehicle.

Installation

1. Follow removal procedure in reverse order.
2. Tighten the pickup box nuts to 54-95 N·m (40-70 lb-ft).

Official Licensed Product Ford Motor Company

REMOVAL AND INSTALLATION (Continued)

Pickup Box Installation, Styleside

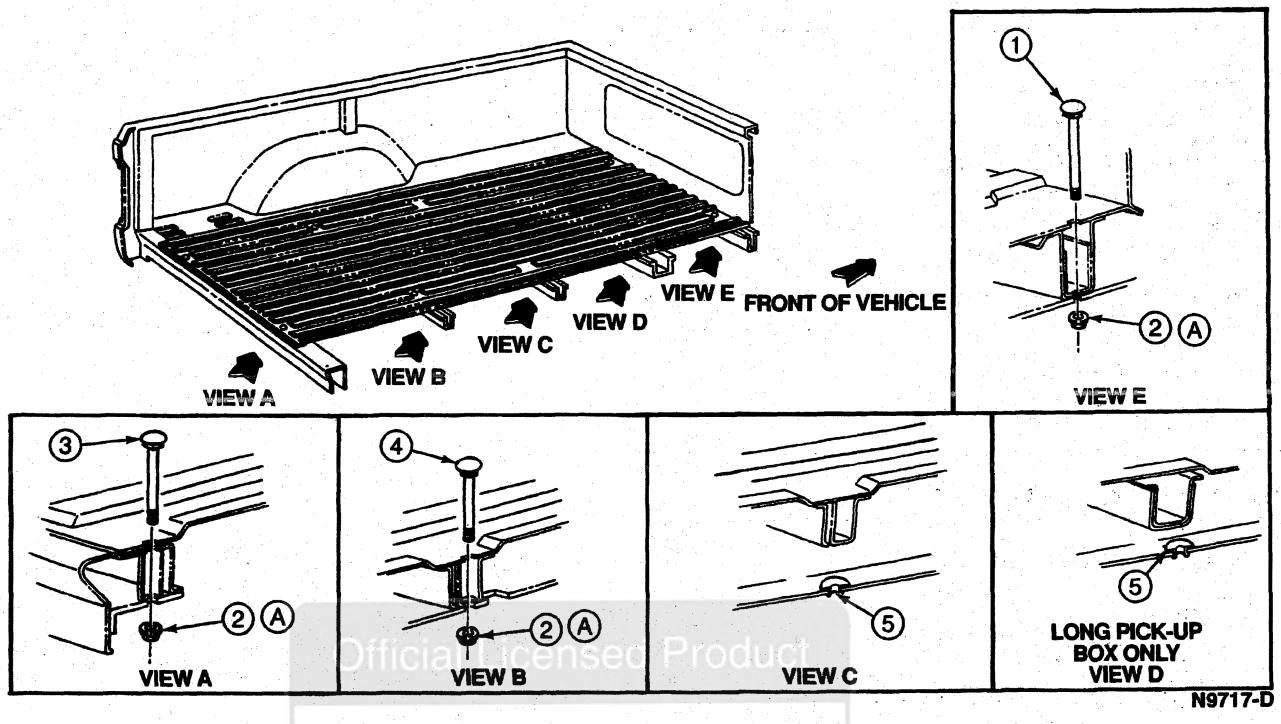

Item	Part Number	Description
1	N803023-S40	Bolt
2	N620483-S2	Nut
3	N803022-S40	Bolt

(Continued)

Item	Part Number	Description
4	N803020-S40	Bolt
5	5C036	Isolator, Frame to Body
A	—	Tighten to 54-95 N·m (40-70 Lb-Ft)

Official Licensed Product
Ford Motor Company

Fender, Rear, F-350 with Dual Rear Wheels

Removal

1. Disconnect rear lamp wiring (14405).
2. Remove two upper and one lower wheel hub splash shield (1A095)-to-fender retaining nuts and bolts.
3. Remove front and rear fender brace retaining bolts.
4. Remove fender-to-body retaining bolts.
5. Support fender and remove two fender-to-body retaining nuts (one each upper corner).
6. Remove fender.

Installation

1. Follow removal procedure in reverse order. Refer to the following illustration for tightening specifications.

REMOVAL AND INSTALLATION (Continued)

Fender, Rear, F-350 with Dual Wheels

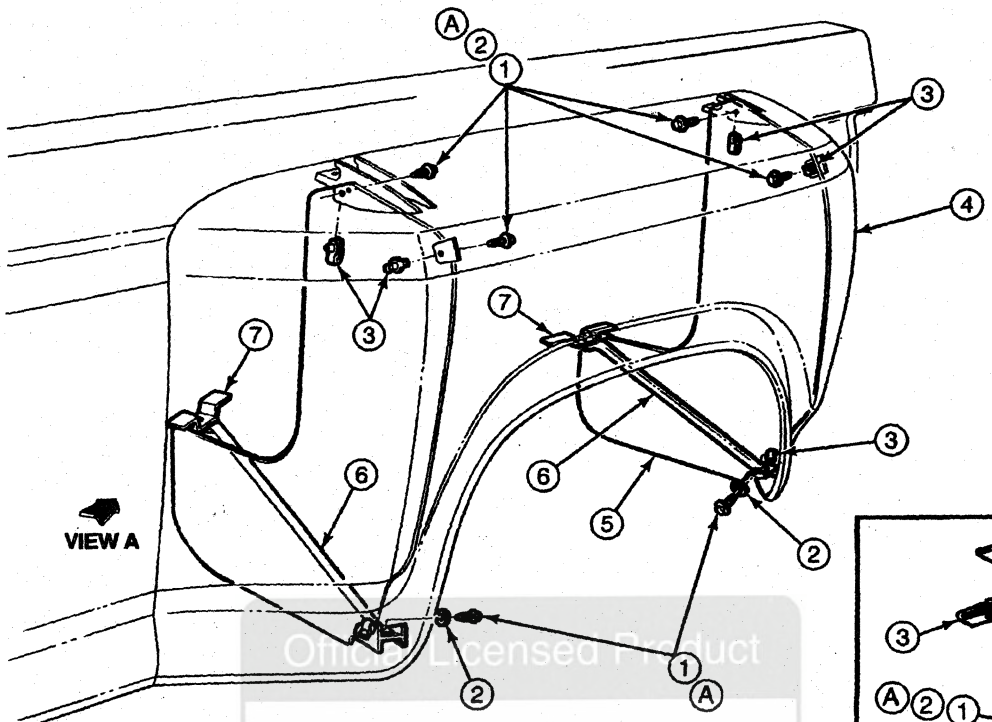

F-350 STYLESIDE-DUAL REAR WHEEL FENDER SPLASH SHIELD (8.0 FT BOX)

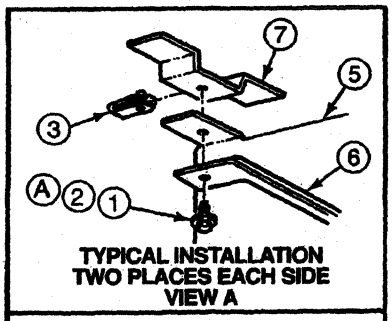

TYPICAL INSTALLATION TWO PLACES EACH SIDE VIEW A

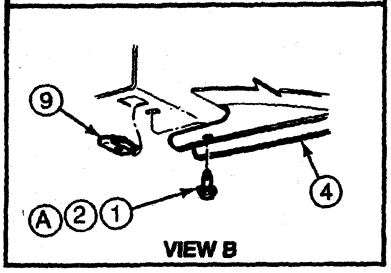

VIEW B

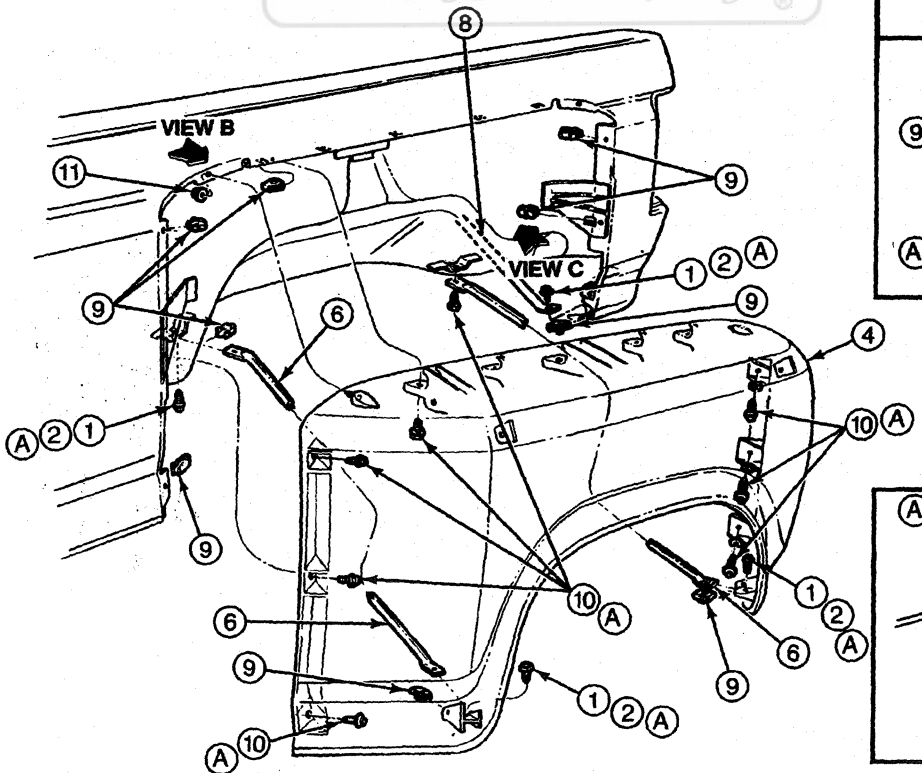

F-350 DUAL REAR WHEEL FENDER

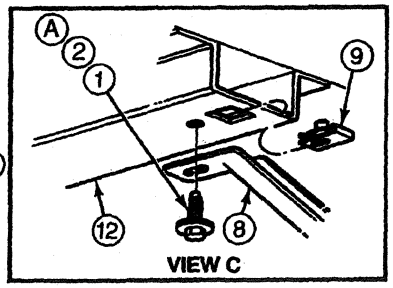

VIEW C

N9719-C

REMOVAL AND INSTALLATION (Continued)

Item	Part Number	Description
1	N606676-S2	Bolt
2	44722-S2	Washer
3	N800854-S2	Nut
4	16312	Fender
5	28370	Rear Wheel Splash Shield
6	16340	Rear Fender Brace
7	—	Bracket (Part of 16340)

(Continued)

Item	Part Number	Description
8	277A52	Body Side Lower Brace
9	N800925-S100	Nut
10	N606677-S2	Bolt
11	N620480-S2	Nut
12	11215	Rear Floor Pan Assy
A	—	Tighten to 7-11 N·m (5-8 Lb-Ft)

ADJUSTMENTS

Pickup Box Adjustments

The valance and body side panels can be adjusted slightly by loosening attaching bolts. However, if the panels cannot be aligned satisfactorily, check the attaching brackets and underbody for damage.

The pickup box design is the same for both F-Series SuperCab and Regular Cab. The rear of the regular cab body is 3 mm (0.11 inch) wider on each side than the front width of the pickup box. However, on SuperCab vehicles, the front of the pickup box is 7 mm (0.27 inch) wider on each side than the rear width of the cab body.

If there is a cab-to-box alignment concern, use the following instructions.

REGULAR CAB VS. SUPERCAB STYLESIDE BOX IS COMMON

F-REGULAR CAB

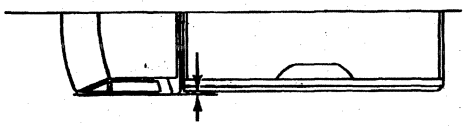

3.0MM ± 4.0*

F-SUPERCAB

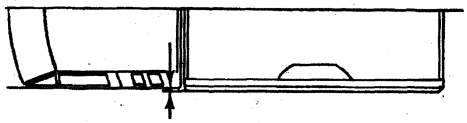

7.0MM ± 4.0*

* — MEASURED AT UPPER CHARACTER LINE

N9945-C

Pickup Box Alignment

1. Loosen the eight pickup box retaining bolts.
2. NOTE: Make sure cab-to-box margin at outboard edge of box is no less than 21.0 mm (0.82 inch). Less than minimum clearance may result in cab-to-box contact during severe usage.

   Move box so front of pickup box is centered on rear of cab.
3. If satisfactory alignment is achieved, tighten the eight bolts to 54-95 N·m (40-70 lb-ft).
4. If satisfactory alignment cannot be achieved by following Steps 1-3, it may be necessary to adjust position of cab.
5. Loosen six cab front end sheet metal mounting bolts.
6. **CAUTION: Make sure cab-to-box margin is no less than 21.0 mm (0.82 inch).**

   Move cab and pickup box to achieve proper alignment.
7. Tighten eight pickup box bolts to 54-95 N·m (40-70 lb-ft).
8. Tighten four cab bolts to 68-95 N·m (50-70 lb-ft).
9. Tighten front end sheet metal bolts to 76-102 N·m (56-75 lb-ft).

Ford Motor Company Licensed Product

ADJUSTMENTS (Continued)

10. Adjust the transmission shift select cable. Refer to Section 07-05 in the Powertrain, Drivetrain Manual.

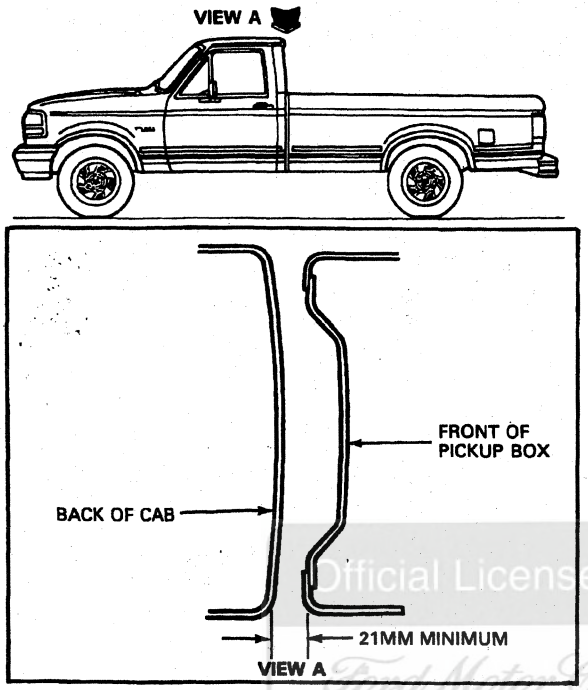

Pickup Box Lean

1. Place vehicle on a flat, smooth surface.
2. Inspect vehicle for any heavy add-ons that can cause excessive weight on any corner of vehicle.
3. Vehicle should be empty and fuel tanks should be full — without cargo in the pickup box (such as tools, equipment or debris).
4. Vehicle must be sitting on the wheels and tires and not on a hoist, jack or jack stands.
5. Check all wheels and tires.
   a. Wheels must be same size and design, right and left side on each axle.
   b. Tires must be same brand, tire size, tread design and equal tread wear side-to-side on each axle.
   c. Wheel size and design, tire size and tire design should be indicated on the Vehicle Certification Label. Use of larger size, off-road, or wide tread wheels or tires is not approved.
   d. Check tire pressures of all tires; inflate to specifications indicated on the Vehicle Certification Label.
6. Lay a straightedge at least 2 meters (6-1/2 feet) long across the rear edge of the pickup box and have an assistant hold the straightedge.

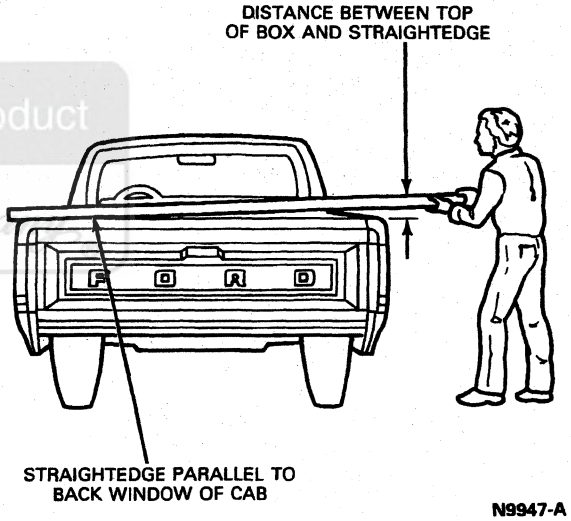

Official Licensed Product
Ford Motor Company

ADJUSTMENTS (Continued)

7. Stand 1.9-2.4 meters (6-8 feet) behind the truck. With your eye level at the top of the pickup box, have your assistant lift whichever side of the straightedge is necessary to make it parallel to the back window of the cab.

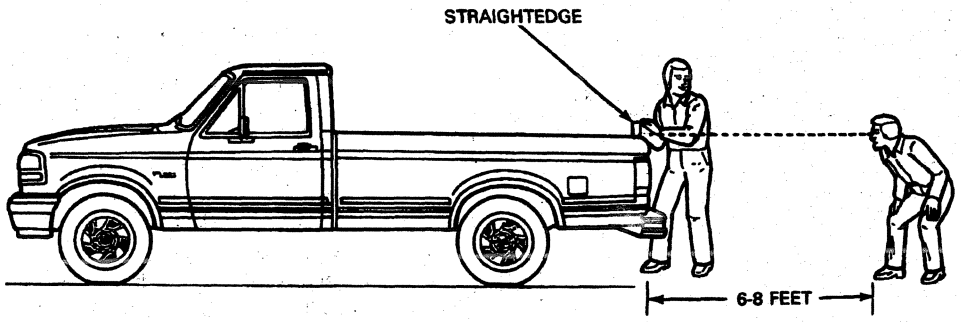

8. Measure distance between bottom of straightedge and top of pickup box outer panel. If distance exceeds 6.5 mm (0.25 inch), shim the low side of vehicle as follows:
   a. If distance is between 6.6 mm and 18 mm (0.26 inch and 0.70 inch), shim the axle. Refer to Shimming, Axle, in the Adjustments portion of this section.
   b. If distance is between 18 mm and 30 mm (0.70 inch and 1.20 inch), shim the pickup box. Refer to Shimming, Pickup Box, in the Adjustments portion of this section.
   c. If distance exceeds 30 mm (1.20 inch), shim both the axle and pickup box. Refer to Shimming, Axle, and Shimming, Pickup Box, in the Adjustments portion of this section.
9. If, after shimming, the rear bumper is not aligned with the rear of pickup box, realign the bumper as follows:
   a. Remove the four bumper-to-chassis frame retaining bolts.
   b. Ream the four holes (two on each side) to 17 mm (0.66 inch) on the bumper arms through which the chassis frame attaching bolts are installed.
   c. Reinstall the bumper to chassis frame with attaching bolts and align the bumper to the pickup box.
   d. Tighten the bumper retaining bolts to 95-140 N·m (70-103 lb-ft).

Shimming, Axle

1. Raise vehicle frame until the weight is off the rear springs, with the tires still touching the floor.
2. Loosen the spring U-bolts to allow the axle to separate from the spring.
3. On the low side of the vehicle, position one shim (D7TZ-5742-A) between the spring and the spring tie bolt head through the hole in the shim. On 4x4 vehicles, position shim between the rear spring and axle spacer. Tape can be used to hold the shim in position.
4. Make sure the spring leaves are aligned properly and the spring U-bolts contact spring assembly edges or axle seat.
5. Tighten the spring U-bolt so the spring tie bolt head, which extends through the shim, enters axle seat hole.
6. Tighten U-bolt nuts to 203-284 N·m (150-210 lb-ft).

Shimming, Pickup Box

1. Loosen all box retaining bolts. Remove the four bolts on the low side of the box.

ADJUSTMENTS (Continued)

Pickup Box Bolt Locations

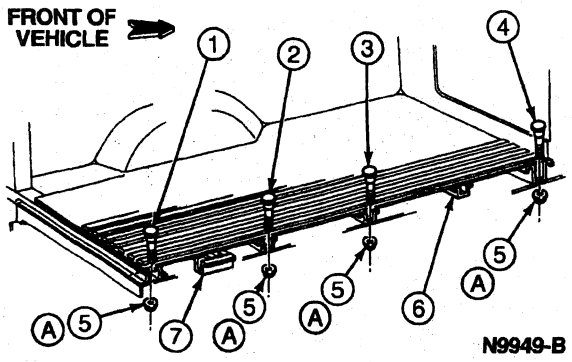

Item	Part Number	Description
1	N803022-S40	Bolt, M12-1.75 x 88.9 (No. 4 Box Bolt)
2	N803020-S40	Bolt, M12-1.75 x 76.2 (No. 3 Box Bolt)
3	N803020-S40	Bolt, M12-1.75 x 76.2 (No. 2 Box Bolt)
4	N803023-S40	Bolt, M12-1.75 x 108 (No. 1 Box Bolt)
5	N620483-S2	Nut
6	—	Sill (8-Ft. Box Only) (No. 2 Sill) (Part of 11215)
7	—	Sill (No. 5 Sill) (Part of 11215)
A	—	Tighten to 54-95 N·m (40-70 Lb-Ft)

2. Sill Shims No. 2 and No. 5 will need to be fabricated from a piece of steel to the dimensions shown in the following illustrations.

(Continued)

No. 2 Sill Shim Dimensions

Official Licensed Product

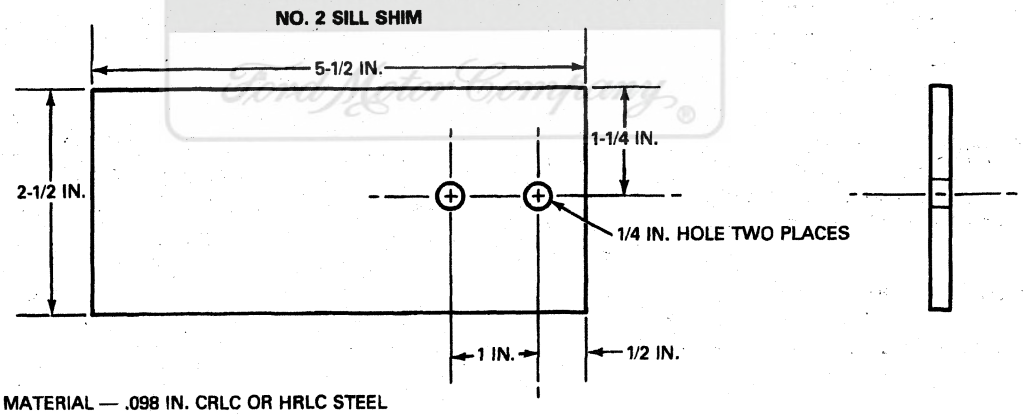

MATERIAL — .098 IN. CRLC OR HRLC STEEL
FINISH — PHOSPHATE AND OIL OR BLACK PAINT

N9950-A

ADJUSTMENTS (Continued)

No. 5 Sill Shim Dimensions

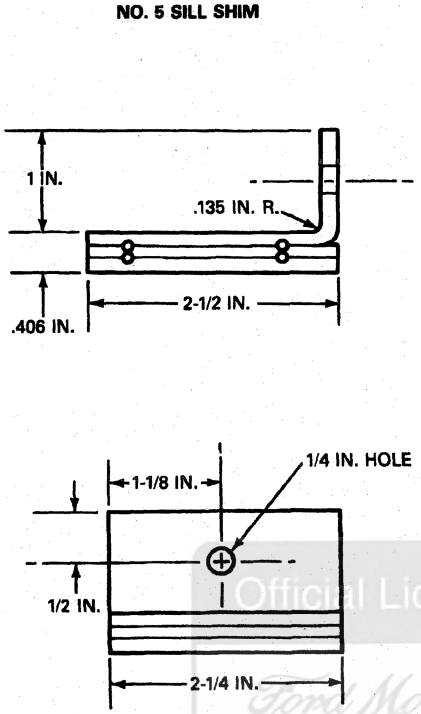

TACK WELD ON EDGES TO HOLD THE THREE PARTS TOGETHER

MATERIAL — .136 IN. CRLC OR HRLC STEEL 3 PIECES
FINISH — PHOSPHATE AND OIL OR BLACK PAINT

N9954-B

3. Raise the low side of the box and insert the shims between the top of the frame and bottom of the box cross sills according to the following illustration.

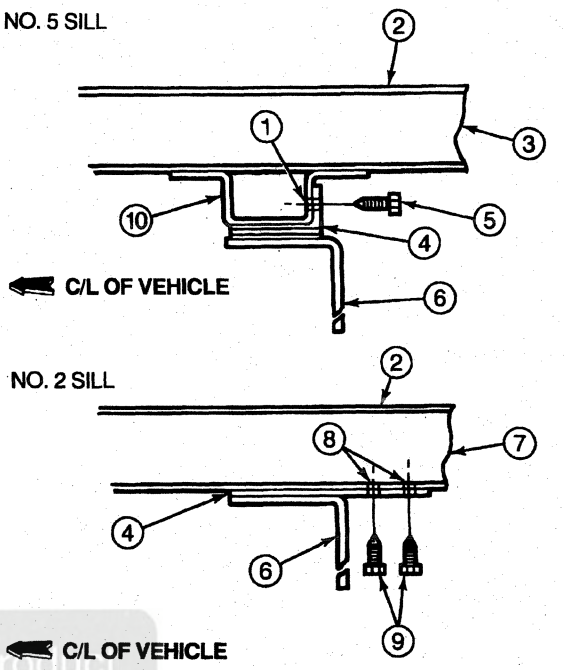

N9953-B

Item	Part Number	Description
1	—	Drill 3/16-Inch Pilot Hole, in Steady Rest
2	—	Pickup Box Floor (Part of 11215)
3	—	No. 5 Sill (Part of 11215)
4	N80334-S2	Shim
5	—	1/4-Inch x 3/4 Sheet Metal Screw (Part of 11215)
6	5005	Frame
7	—	No. 2 Sill (Part of 11215)
8	—	Drill 3/16-Inch Pilot, Two Places in Sill
9	—	1/4 x 3/4-Inch Sheet Metal Screw, Two Places (Part of 11215)
10	—	No. 5 Sill, Steady Rest (Part of 11215)

Official Licensed Product Ford Motor Company

ADJUSTMENTS (Continued)

4. NOTE: Bolts should be held down from top of box to prevent the shoulder from popping out of the floor while starting the nut. Tighten all bolts to 54-95 N·m (40-70 lb-ft).

   Install the bolts listed in the Specifications portion of this section on the side of the box that was shimmed, and tighten all box bolt nuts to 54-95 N·m (40-70 lb-ft).

Item	Part Number	Description
3	—	Pickup Box Sill (Part of 11215)
4	N803334-S2	Shims, 2.50-Inch O.D. x 0.75-Inch I.D. x 0.060-Inch (Quantity Changes with Location)
5	5005	Chassis Frame

NO. 2, NO. 3 AND NO. 4 PICKUP BOX BOLTS

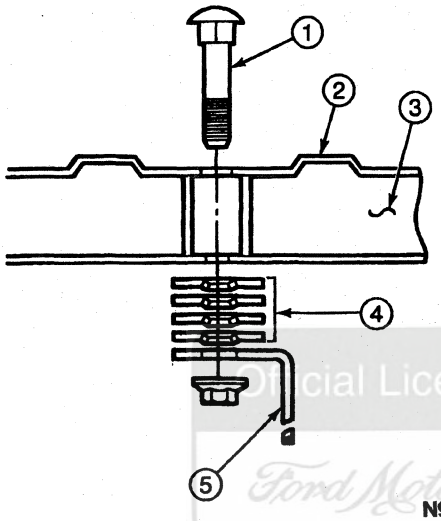

N9952-B

Official Licensed Product
Ford Motor Company

Item	Part Number	Description
1	N803022-S40	Box Bolt
2	11215	Pickup Box Floorpan

(Continued)

SPECIFICATIONS

PICKUP BOX SHIMMING SPECIFICATIONS

Location	Type of Bolt	Shim
No. 4 box bolt (rearmost)	Same as current No. 1 bolt — 108 mm (4.25 inches), oval shoulder	8 shims (2.5 O.D. x .75 I.D. x .060)
No. 5 sill (next sill forward; it does not have a bolt)	No change	1 "L" shim (see illustration) screwed to No. 5 sill
No. 3 box bolt (next body bolt forward of the No. 4 bolt)	Use current No. 2 bolt — 89 mm (3.50 inches) long, square shoulder	5 shims (same as No. 4 shims)
No. 2 box bolt (next body bolt forward)	New bolt required — 101.6 mm (4.00 inches) long, square shoulder	4 shims (same as No. 4 shims) 8-foot box 2 shims (same as No. 4 shims) 6.5-foot box
No. 2 sill (8-foot box only)	New bolt required — 101.6 mm (4.00 inches) long, square shoulder	1 flat shim (see illustration) screwed to No. 2 sill
No. 1 box bolt (bolt at front of pickup box)	No change; use existing bolt — 108 mm (4.25 inches) long, oval shoulder	No shims

SPECIFICATIONS (Continued)

TORQUE SPECIFICATIONS

Description	N·m	Lb-Ft
Pickup Box Bolts (8)	54-95	40-70
Cab Bolts	68-95	50-70
Front Sheet Metal Bolts	76-102	56-75
Bumper Attaching Bolts	95-140	70-103
U-Bolts	203-284	150-210
Pickup Box Nuts	54-95	40-70

(Continued)

TORQUE SPECIFICATIONS (Cont'd)

Description	N·m	Lb-Ft
Pickup Box Bolts	54-95	40-70
Splash Shield Bolt(s) (F-350 with Dual Rear Wheels)	7-11	5-8
Fender Bolt(s) (F-350 with Dual Rear Wheels)	7-11	5-8
Dual Rear Fender-to-Fender Bolt(s)	7-11	5-8

Official Licensed Product
Ford Motor Company

SECTION 01-05 Trim, Interior

SUBJECT	PAGE
VEHICLE APPLICATION	01-05-1
REMOVAL AND INSTALLATION	
Map Pocket and Trim	01-05-11
Moulding, Garnish, Tool Usage	01-05-1
Mouldings, Interior	01-05-1
Trim Panel	01-05-4
REMOVAL AND INSTALLATION (Cont'd.)	
Trim Panel, Aft Seat	01-05-9
Trim Panel, Door	01-05-7
Door Electrical Connections	01-05-9
SPECIFICATIONS	01-05-11
SPECIAL SERVICE TOOLS/EQUIPMENT	01-05-11

VEHICLE APPLICATION

F-250 Heavy Duty, F-350 and F-Super Duty

REMOVAL AND INSTALLATION

Moulding, Garnish, Tool Usage

SPECIAL SERVICE TOOL(S) REQUIRED

Description	Tool Number
Moulding Tool (RH)	T64P-42006-B
Moulding Tool (LH)	T64P-42006-C

The interior trim garnish mouldings that surround the roof rail headers are retained by push-in spring clips.

Use Moulding Tools T64P-42006-B (RH) and T64P-42006-C (LH) to remove mouldings with spring clips. If tools are unavailable, a tool can be fabricated to remove the interior trim garnish mouldings.

Ford Motor Company

Mouldings, Interior

The installation of the plastic and steel interior mouldings is shown in the following illustrations. In most instances, one moulding overlaps another moulding. If this condition is found, it will be necessary to loosen or remove the overlapping moulding before removing the desired moulding.

Windshield Moulding

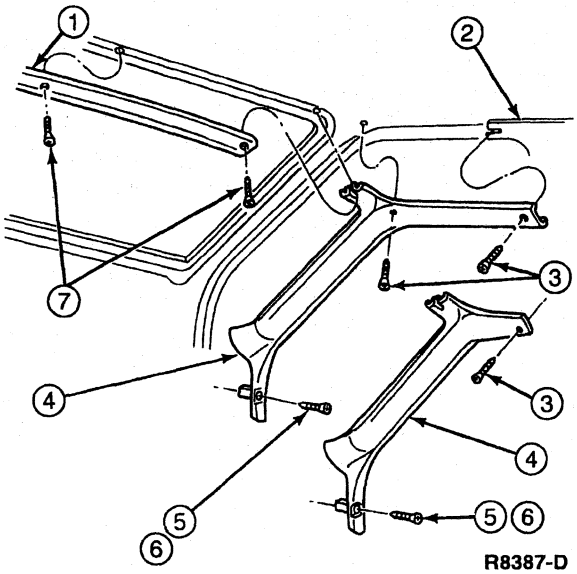

R8387-D

Item	Part Number	Description
1	03606	Windshield Garnish Moulding
2	24356	Body Pillar Trim Panel
3	N801157-S58	Screw and Washer

(Continued)

REMOVAL AND INSTALLATION (Continued)

Item	Part Number	Description
4	03598	Windshield Side Garnish Moulding
5	N806878-S58	Screw and Washer (RH)

(Continued)

Item	Part Number	Description
6	N804992-S424	Screw and Washer (LH)
7	N806578-S58	Screw and Washer (1 Req'd Each Side)

Roof Side Moulding, Crew Cab

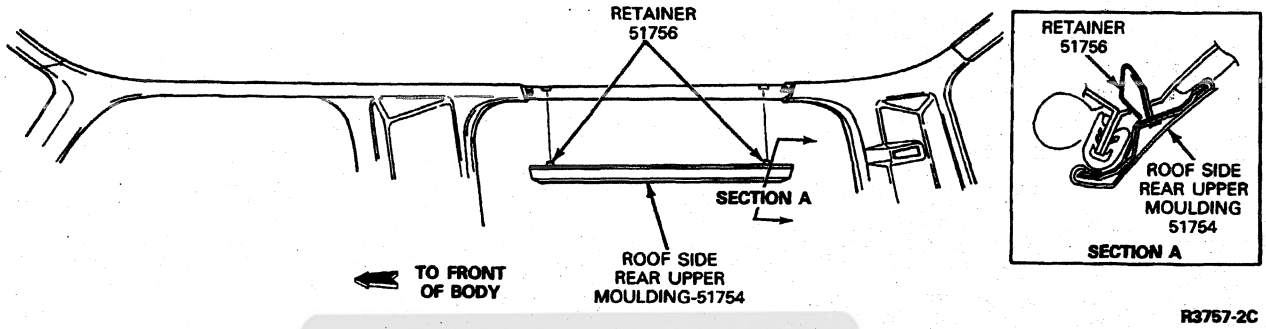

R3757-2C

Official Licensed Product
Ford Motor Company

Back Window Garnish Moulding, SuperCab

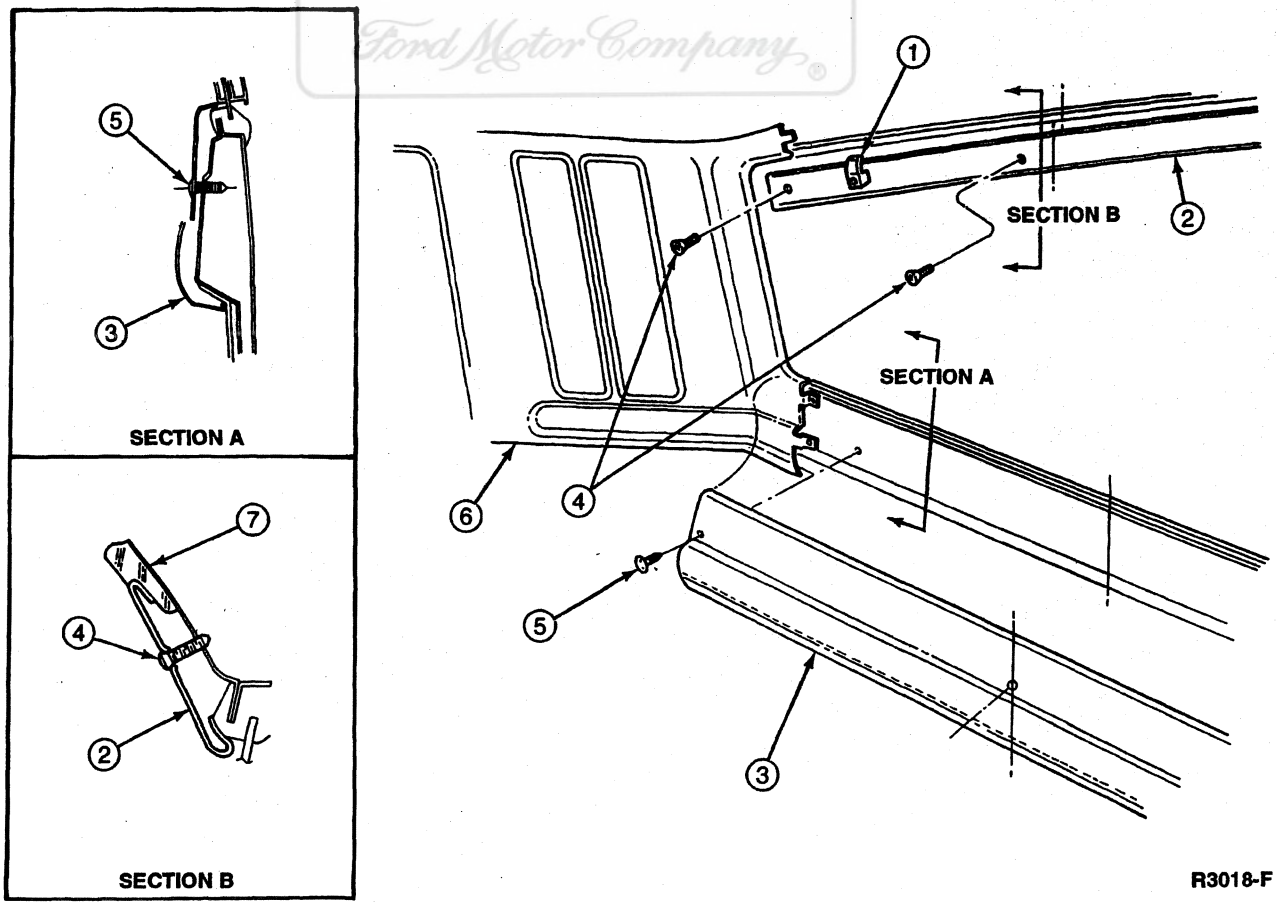

R3018-F

REMOVAL AND INSTALLATION (Continued)

Item	Part Number	Description
1	29024	Coat Hook Cover
2	42410	Moulding
3	42456	Back Window Garnish Lower Moulding

(Continued)

Item	Part Number	Description
4	N800942-S58	Screw
5	N801157-S58	Screw
6	52018	Panel
7	51968	Roof Trim Panel

Back Window Moulding and Coat Hook Cover, Crew Cab

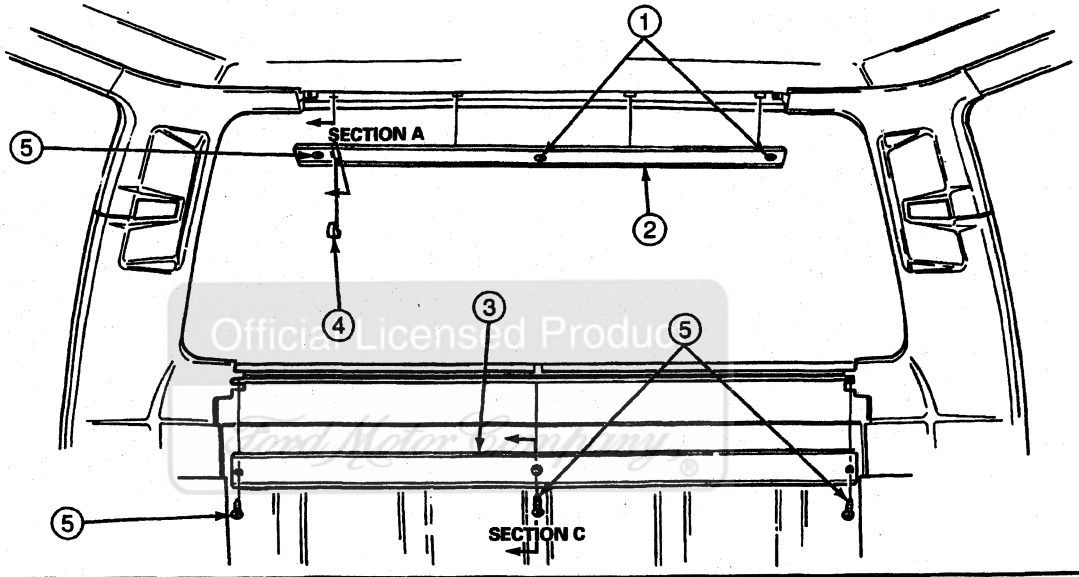

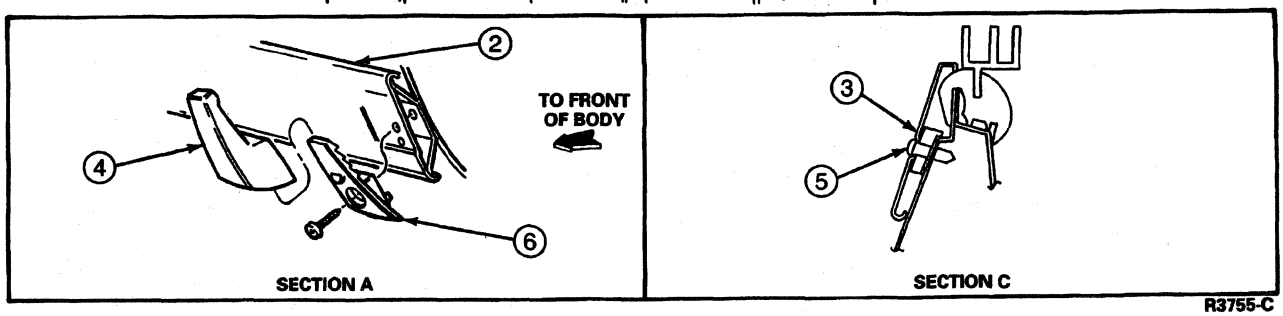

R3755-C

Item	Part Number	Description
1	N800942-S2	Screw (3 Req'd)
2	42324	Liftgate Moulding
3	42304	Back Window Garnish, Lower

(Continued)

Item	Part Number	Description
4	29024	Coat Hook Cover
5	N800942-S2	Screw
6	29232	Retainer

REMOVAL AND INSTALLATION (Continued)

Trim Panel

Interior trim panels are attached to body panels with screws or metal strips, or both. The removal and installation procedures are as shown in the following illustrations. Access to some panels, however, requires prior removal of other parts. Removal procedures for these parts are incorporated in the procedure or referenced to the appropriate section.

Trim Panel, Cowl Side

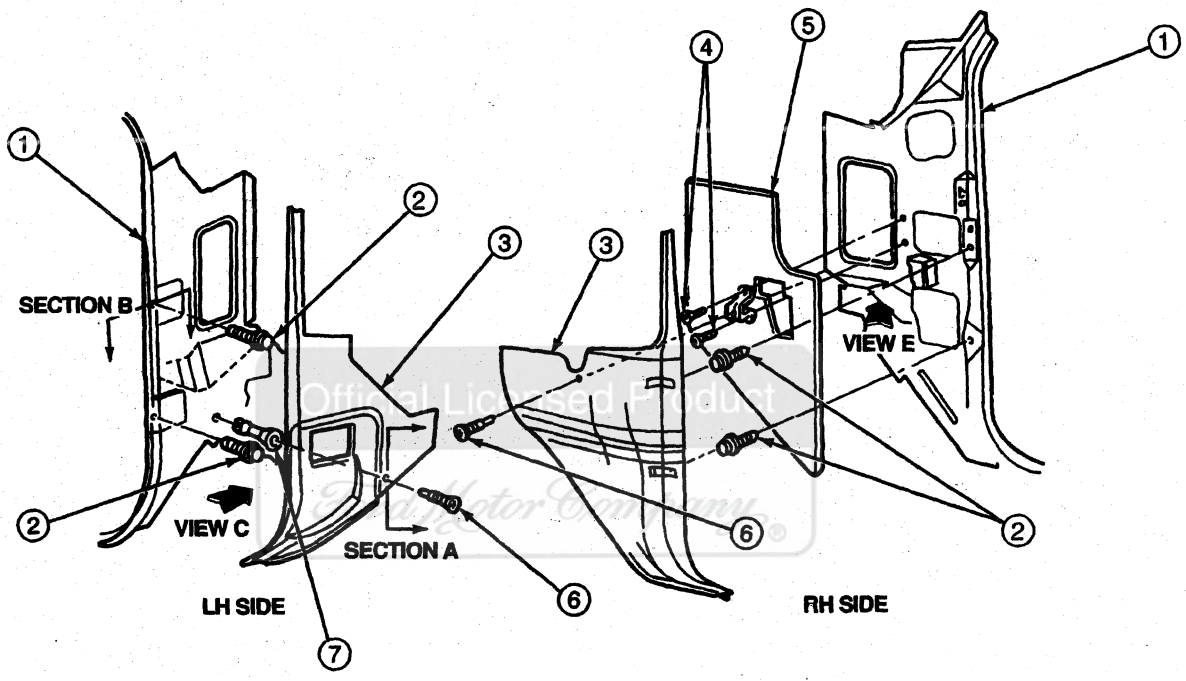

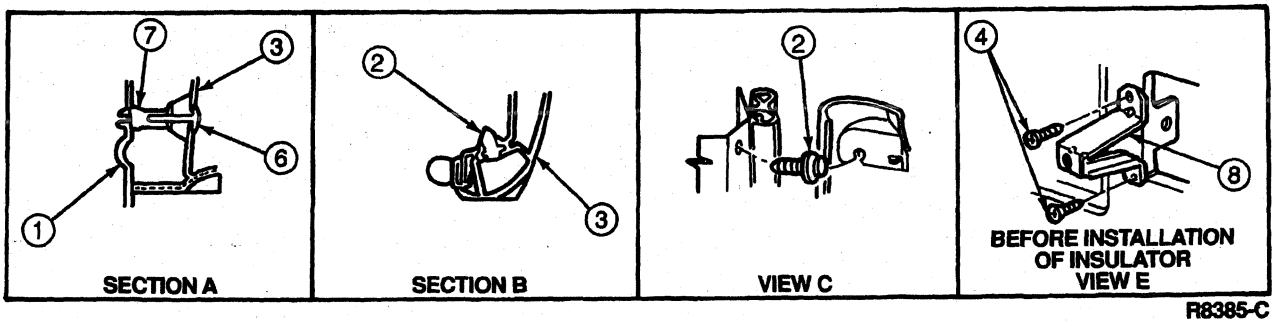

R8385-C

Item	Part Number	Description
1	02012	Cowl Top Outer Panel (RH and LH)
2	N805612-S100	Pushpin
3	02344	Cowl Side Panel
4	56910-S55	Screw

(Continued)

Item	Part Number	Description
5	023A60	Cowl Side Panel Insulator (RH)
6	—	Screw (Part of 02354)
7	N806854-S	Nut (Nylon)
8	02354	Cowl Side Trim Panel Retainer

REMOVAL AND INSTALLATION (Continued)

Center Pillar Inside Upper Finish Panel, Crew Cab

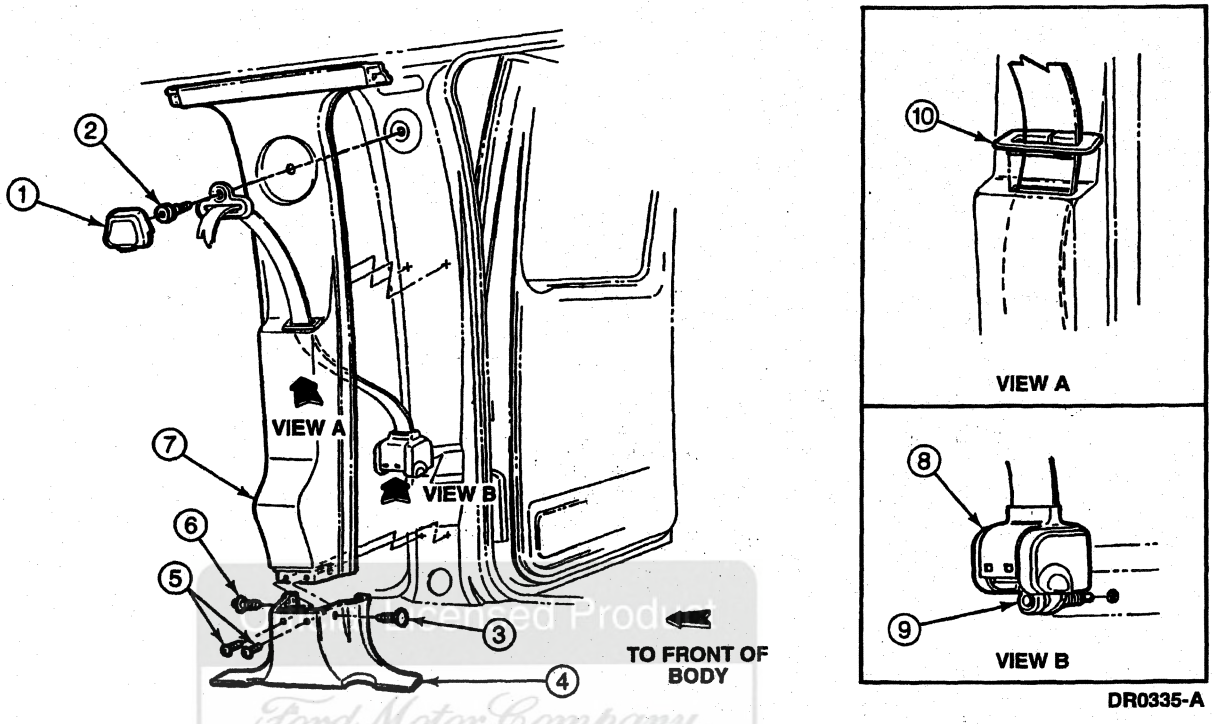

Item	Part Number	Description
1	9860262	Cover, Seat Shoulder Strap Guide
2	386274	Bolt
3	N807154	Screw
4	3524346-7-B	Finish Panel, Lower Body Pillar
5	N800942	Screw and Washer

(Continued)

Item	Part Number	Description
6	N807154	Screw
7	3524356-7-A	Finish Panel, Upper Body Pillar
8	35611B08	Front Safety Belt Retractor
9	389370-S100	Bolt
10	3560220	Front Safety Belt Bezel

Ford Motor Company

REMOVAL AND INSTALLATION (Continued)

Body Interior Trim Panels, SuperCab

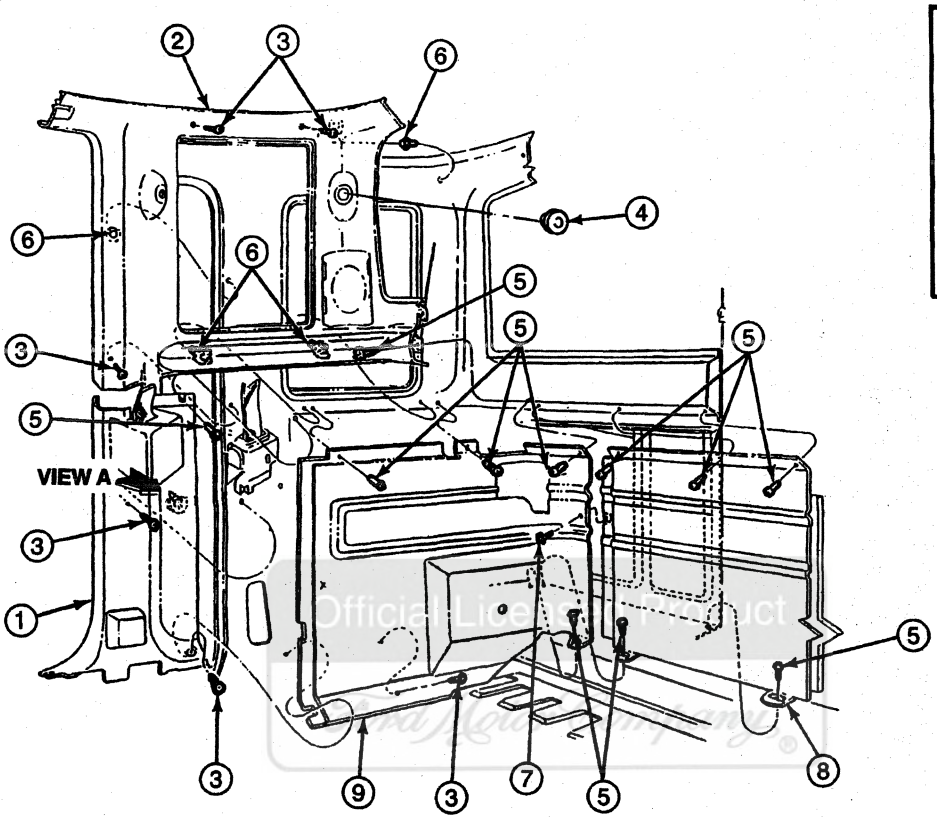

R8371-C

Item	Part Number	Description
1	281A32	Center Body Trim Panel
2	519A96	Roof Side Rear Trim Panel
3	N800942-S58	Screw
4	611B32	Button Plug

(Continued)

Item	Part Number	Description
5	381801-S58	Screw
6	N802900	Pushpin
7	56928-S58	Screw
8	40374	Back Lower Trim Panel
9	278D12	Rear Corner Trim Panel

REMOVAL AND INSTALLATION (Continued)

Lock Pillar Trim Panel

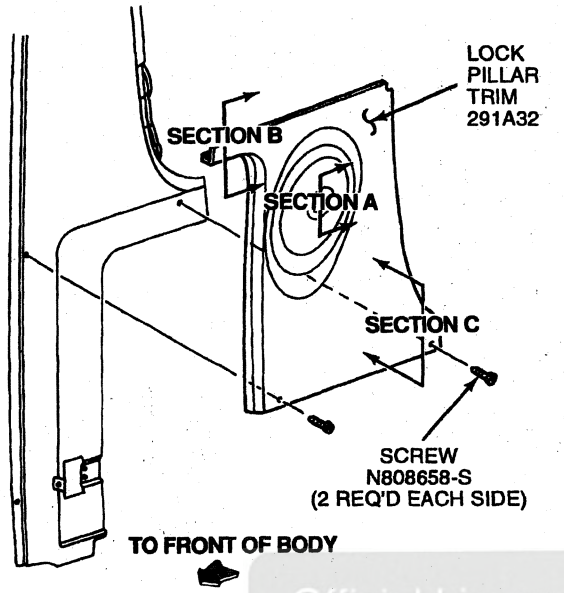

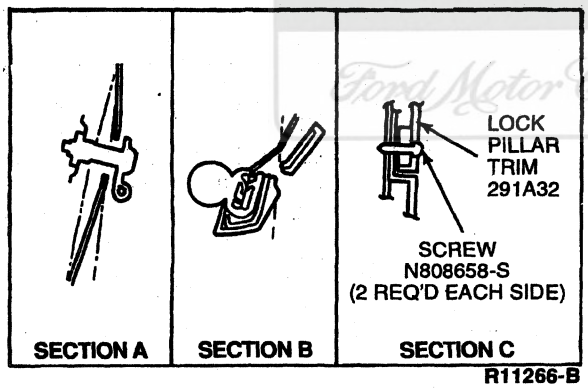

Trim Assembly, Back Panel

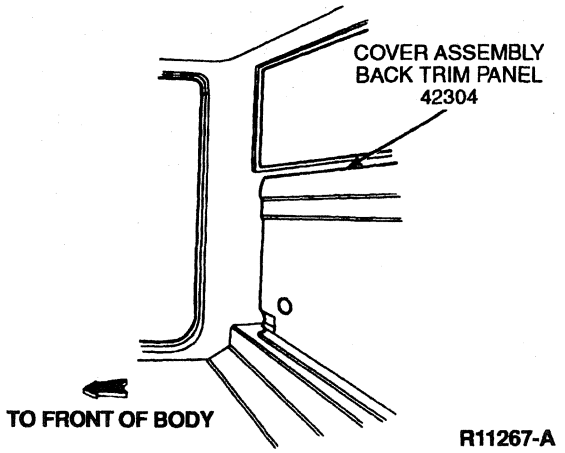

Trim Panel, Door

Removal

1. Remove screw(s) retaining the front arm rest pad (24100) to front door trim panel (23942).
2. Remove screw retaining inside door handle (22600). Remove inside door handle.
3. Remove the screw retaining window regulator handle, if so equipped. Remove window regulator handle and washer.
4. If equipped with power windows, remove window regulator switch housing (14527). Refer to Section 01-11.
5. If equipped with power door locks, remove the power door lock switch housing. Refer to Section 01-14A.
6. Remove door lock switch (14028), if equipped. Refer to Section 01-14A.
7. Remove outside rear view mirror control (17B676), if equipped. Refer to Section 01-09.
8. Carefully pry front door trim panel and pushpins away from front door trim shield (237A04), using Rotunda Windshield and Moulding / Trim Removal Kit 107-R0401 or equivalent. Never pull on front door trim panel to remove pushpins from front door trim shield.

Installation

1. Follow removal procedure in reverse order.
2. Tighten screw and washer assembly to 1-2 N·m (9-18 lb-in).

Official Licensed Product
Ford Motor Company

REMOVAL AND INSTALLATION (Continued)

Trim Panel, Door

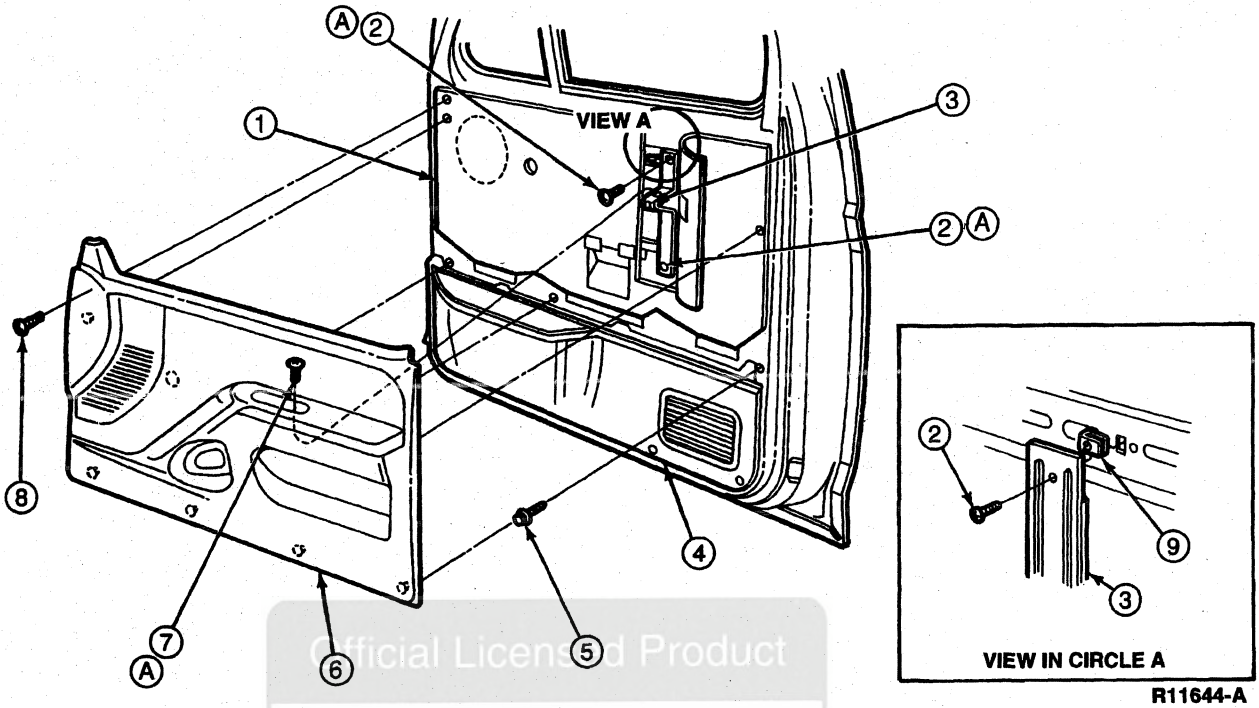

Item	Part Number	Description
1	237A04	Front Door Trim Shield
2	56914-S58	Screw and Washer (2 Req'd Each Side)
3	24022	Armrest Support
4	642A54	Map Pocket Assy
5	N802900-S	Pushpin (5 Req'd Each Side)
6	23942	Front Door Trim Panel

(Continued)

Item	Part Number	Description
7	56914-S58	Screw (1 Req'd Each Side)
8	N806578-S58	Screw and Washer (1 Req'd Each Side)
9	N802539-S100	Spring Nut (2 Req'd Each Side)
A	—	Tighten to 1-2 N·m (9-18 Lb-In)

Official Licensed Product
Ford Motor Company

REMOVAL AND INSTALLATION (Continued)

Trim Panel, Door, Hi-Series

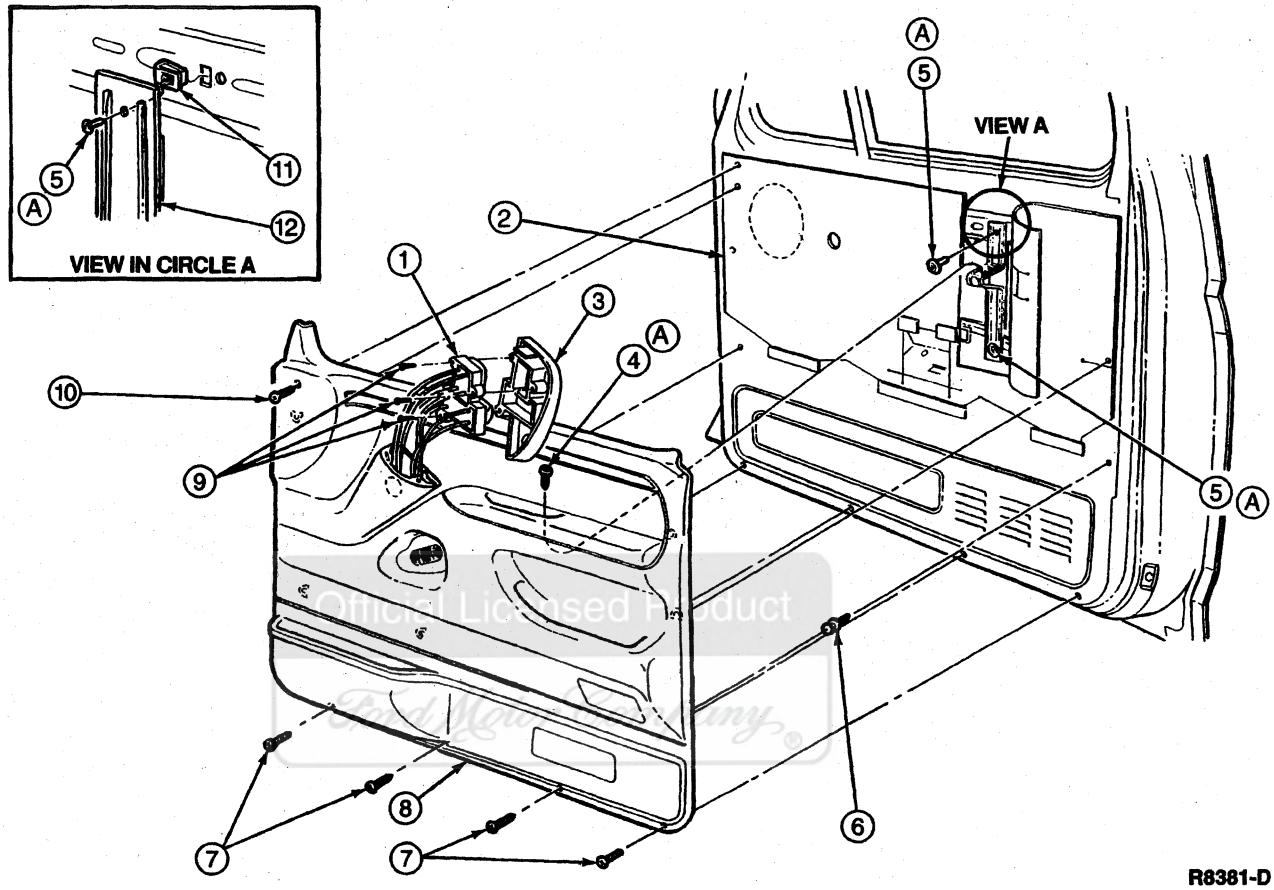

Item	Part Number	Description
1	—	Window Regulator Control Wiring (Part of 14630)
2	237A04	Front Door Trim Shield
3	14527	Window Regulator Switch Housing
4	56912-S58	Screw (1 Req'd Each Side)
5	56914-S58	Screw and Washer
6	N801925-S	Pushpin (5 Req'd Each Side)
7	N805121-S303	Screw and Washer Assy (4 Req'd Each Side)

(Continued)

Item	Part Number	Description
8	23942	Front Door Trim Panel
9	55928-S2	Screw (3 Req'd Each Side)
10	N806578-S58	Screw and Washer (1 Req'd Each Side)
11	N802539-S100	Spring — Nut
12	24022	Armrest Support
A	—	Tighten to 1-2 N·m (9-18 Lb-In)

Door Electrical Connections

Refer to Section 01-11 for power window, Section 01-09 for power mirror or Section 01-14A for power locks.

Trim Panel, Aft Seat

Refer to the following illustrations for removal and installation.

REMOVAL AND INSTALLATION (Continued)

Trim Panel, Back

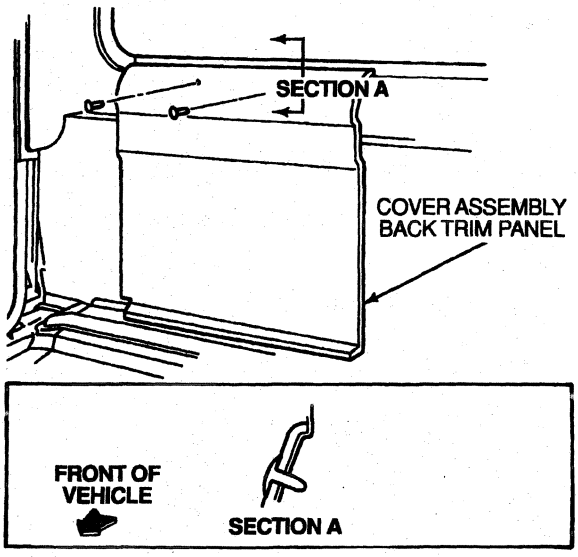

R11270-A

Trim Panel, Body Side, SuperCab

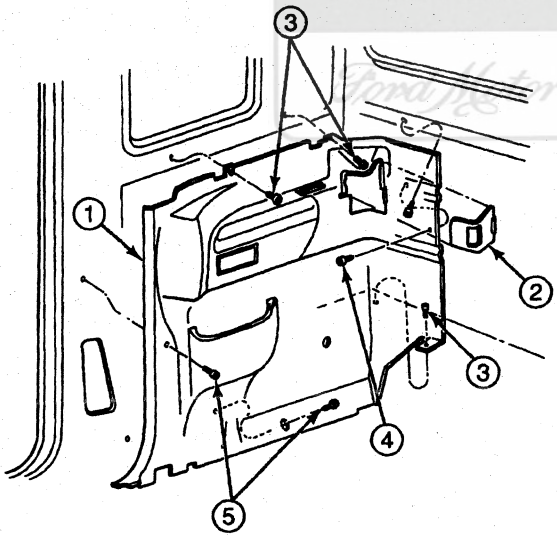

R11268-A

Item	Part Number	Description
1	278012	Panel Assy, Body Rear Cover Trim
2	61348	Cover, Rear Seat Back Latch
3	381801-S58	Screw (4 Req'd Each Side)
4	56928-S58	Screw (1 Req'd Each Side)
5	N800942-S58	Screw (2 Req'd Each Side)

(Continued)

Trim Panels, Rear

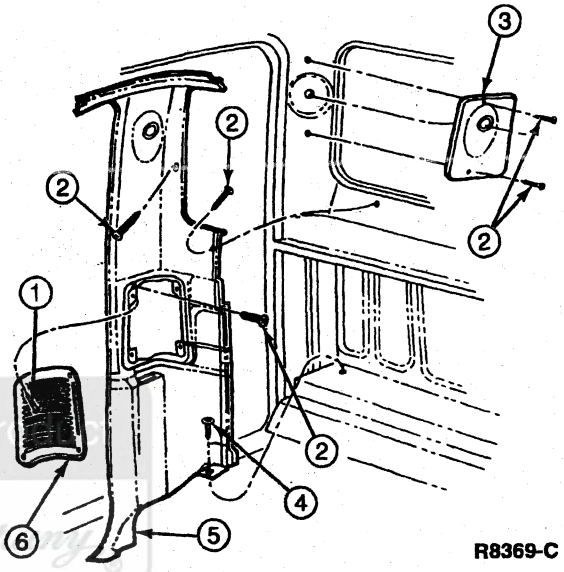

R8369-C

Item	Part Number	Description
1	N803247-S58	Screw, Oval Head (4 Req'd Each Side)
2	N800942-S58	Screw and Washer (1 Req'd Each Side)
3	60230	Front Seat Shoulder Strap Opening Cover
4	381801-S58	Screw, Round Washer Head (1 Req'd Each Side)
5	278D12	Rear Corner Trim Panel
6	601A42	Radio Speaker Grille

Official Licensed Product
Ford Motor Company

REMOVAL AND INSTALLATION (Continued)

Map Pocket and Trim

Refer to the following illustration for removal and installation.

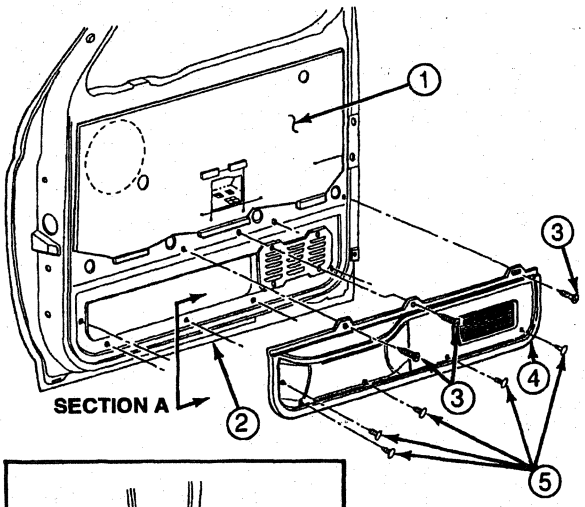

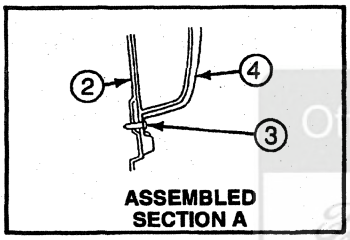

R11639-A

Item	Part Number	Description
1	237A04	Front Door Trim Shield
2	23942	Front Door Trim Panel

(Continued)

Item	Part Number	Description
3	N805123-S303	Screw and Washer (4 Req'd Each Side)
4	642A54	Map Pocket Assy
5	N808983-S	Pushpin (4 Req'd Each Side)

SPECIFICATIONS

TORQUE SPECIFICATIONS

Description	N·m	Lb-In
Hi-Series Armrest Support Screw and Washer	1-2	9-18
Hi-Series Armrest Pad Screw	1-2	9-18
Sun Visor Attaching Screws	1.4-2.0	13-18

SPECIAL SERVICE TOOLS/EQUIPMENT

SPECIAL SERVICE TOOLS REQUIRED

Tool Number/ Description	Illustration
T64P-42006-B Moulding Tool (RH)	T64P-42006-B
T64P-42006-C Moulding Tool (LH)	T64P-42006-C

Official Licensed Product
Ford Motor Company

SECTION 01-08 Trim, Exterior

SUBJECT	PAGE
VEHICLE APPLICATION	01-08-1
REMOVAL AND INSTALLATION	
Door, Headlamp	01-08-1
Mouldings, Exterior	01-08-4
Body Side Protection	01-08-4
REMOVAL AND INSTALLATION (Cont'd.)	
Step, Cab	01-08-4
Vent Panel, Cowl Top	01-08-2
SPECIFICATIONS	01-08-6

VEHICLE APPLICATION

F-250 Heavy Duty, F-350 and F-Super Duty

REMOVAL AND INSTALLATION

Door, Headlamp

Removal

1. Remove two screws and nuts retaining headlamp door (13064) to radiator grille opening panel reinforcement (8A284).
2. Pull headlamp door from vehicle.
3. Remove three bulbs and sockets from headlamp door.
4. Remove headlamp door.

Installation

1. Follow removal procedure in reverse order.
2. Tighten screws to 1.4-2.3 N·m (13-20 lb-in).

Official Licensed Product
Ford Motor Company

REMOVAL AND INSTALLATION (Continued)

Headlamp Door

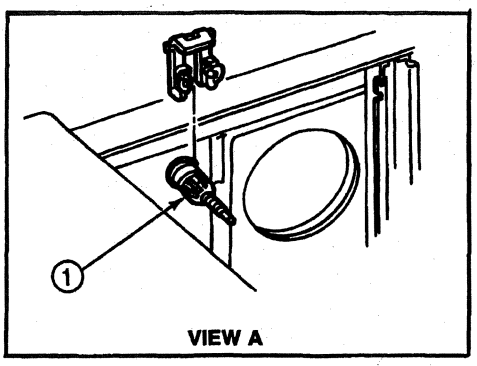

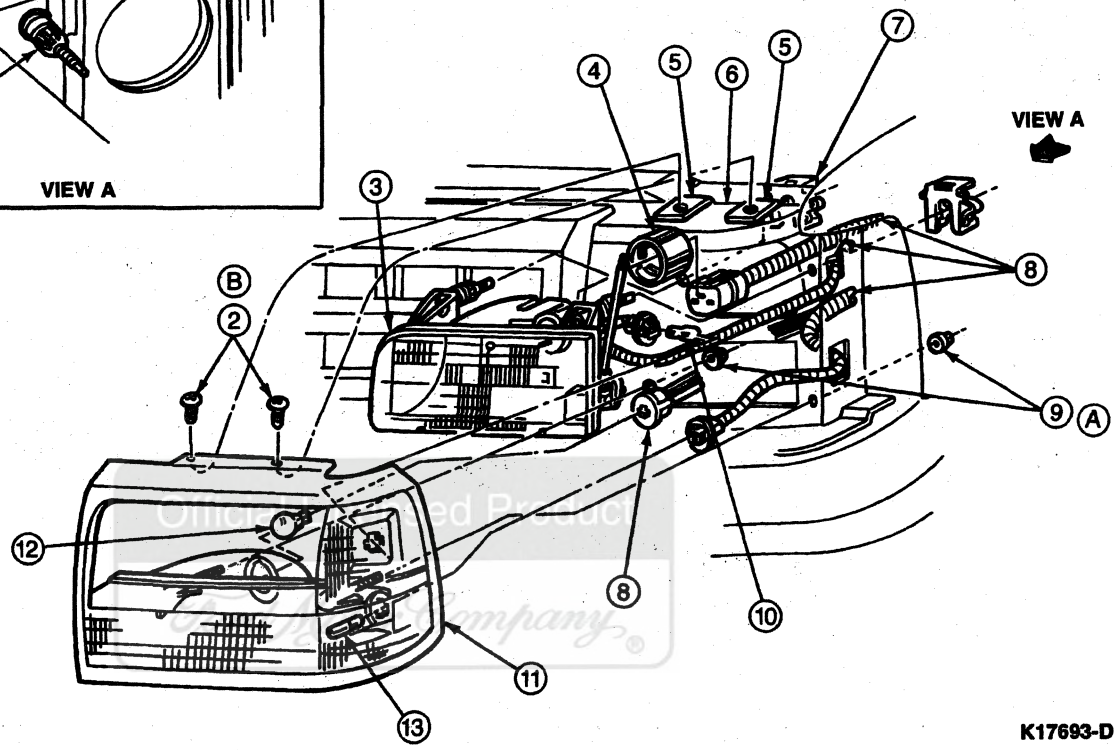

K17693-D

Item	Part Number	Description
1	—	Adjusting Screw Assy (Part of 13005)
2	N801603-S61	Screw (2 Req'd Each Side)
3	13008	Headlamp
4	13N019	Headlamp Bulb Retainer
5	N806851-S100	J-Nuts (2 Req'd)
6	8A284	Radiator Grille Opening Panel Reinforcement
7	13N020	Headlamp Retainer Clip

(Continued)

Item	Part Number	Description
8	12A581	Wiring Assy
9	N621906-S55M	Nut and Washer (2 Req'd)
10	13465	Bulb No. 916 NA
11	13064	Headlamp Door
12	13465	Bulb No. 3157
13	13465	Bulb No. 916
A	—	Tighten to 4-7 N·m (36-61 Lb-In)
B	—	Tighten to 1.4-2.3 N·m (13-20 Lb-In)

Vent Panel, Cowl Top

Removal

1. Open and support hood (16612).
2. Remove windshield wiper pivot arm (17526). Refer to Section 01-16.
3. Remove six screws retaining cowl top vent panel (022A68) to cowl top outer panel (02012).
4. From under the hood, remove screws retaining cowl top panel seal (02824) to cowl top outer panel.
5. Remove cowl top vent panel.
6. If removing cowl top panel seal, remove retaining screws.

REMOVAL AND INSTALLATION (Continued)

Installation

1. NOTE: When installing cowl top vent panel, make sure notches are inboard of vehicle. Install Foam Tape ESB-M3G102-A to outer edge of cowl top vent panel prior to installation. Tighten screws attaching cowl top vent panel to cowl top outer panel to 1.4-2.0 N·m (13-18 lb-in).

   Follow removal procedure in reverse order.

Cowl Top Vent Panel

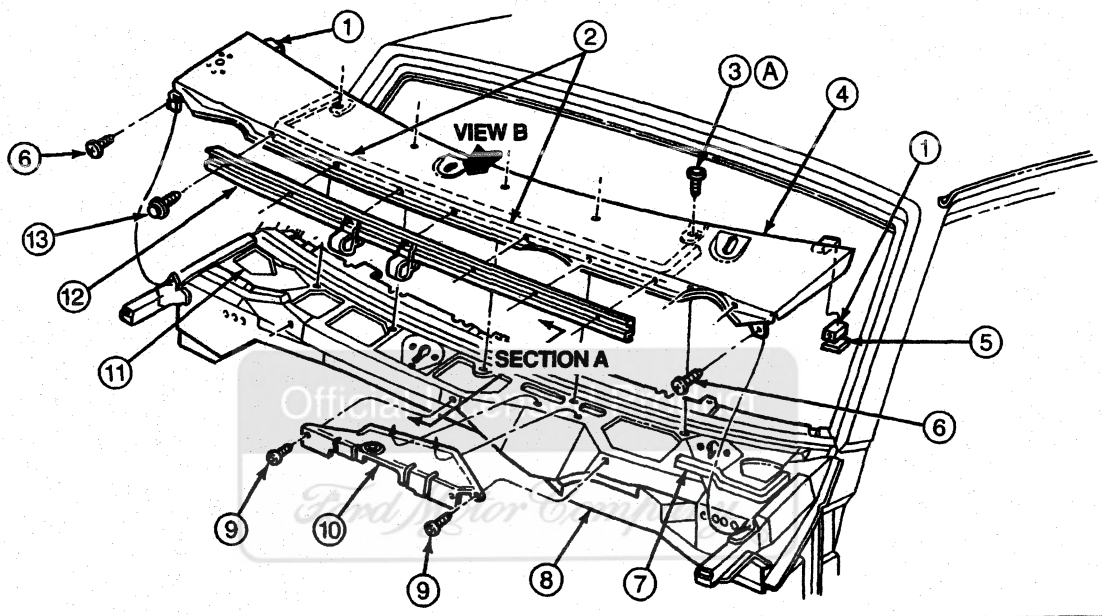

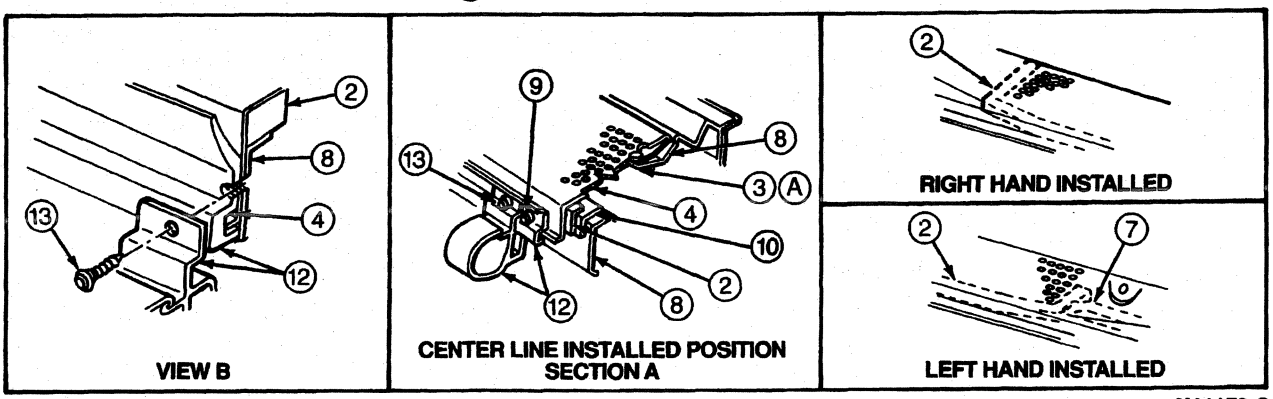

N11178-C

Item	Part Number	Description
1	ESB-M3G102-A	Foam Tape
2	022A70	Cowl Top Seal
3	56903-S55	Screw (5 Req'd)
4	022A68	Cowl Top Vent with Radio Antenna Holes
5	022A56	Cowl Top Vent Grille Spacer (1 Req'd Each Side)
6	56910-S2	Screw (2 Req'd)

(Continued)

Item	Part Number	Description
7	02919	Cowl Top Panel-to-Hood Seal
8	02012	Cowl Top Outer Panel
9	55927-S2	Screw (4 Req'd)
10	022A48	Cowl Top Outer Panel Extension Reinforcement Assy
11	020A50	Cowl Top Panel Access Hole Cover (1 Req'd RH Side)

(Continued)

REMOVAL AND INSTALLATION (Continued)

Item	Part Number	Description
12	02824	Cowl Top Panel-to-Hood Seal Assy

(Continued)

Item	Part Number	Description
13	56902-S55-X	Screw (7 Req'd)
A	—	Tighten to 1.4-2.0 N·m (13-18 Lb-Ft)

Mouldings, Exterior

Body Side Protection

Removal

1. Thoroughly clean sheet metal surface area around moulding using isopropyl alcohol and a clean, soft cloth.
2. Before removing moulding, mark location on top and at each end of moulding with masking tape.
3. **CAUTION: Use care while removing moulding to prevent damage to the paint or sheet metal surface.**

   NOTE: Do not heat moulding or sheet metal surface; this will increase adhesion and make removal difficult. Cold temperatures of 0°C (32°F) and below allow for easier removal of moulding.

   Using a nylon wedge, start at rear of door, wedging nylon tool between moulding and door. At the same time, pull moulding away with steady tension. Remove and replace one moulding at a time.
4. Once a few inches of moulding are free, grip moulding with both hands and pull the moulding slowly toward the front of vehicle.
5. NOTE: Not all of the tape will come off with the moulding. White or gray acrylic tape is most easily removed by gently stretching.

   Grip tape at one end, slowly lifting and pulling away about 12.7 mm (1/2 inch) at a time. Small pieces can be removed by rolling thumb across sheet metal surface.
6. To finish removing the tape, use 3M Scotch-Brite® Moulding Adhesive and Stripe Removal Disc, 3M Part No. 07501 or 07502.
7. When all tape is removed, wipe area with isopropyl alcohol and clean soft cloth. Make sure all tape residue and road dirt is removed. A clean surface is required for application of new moulding. Should paint surface be damaged during moulding removal, repair surface using paint repair procedure. Refer to Section 01-00.

Installation

1. NOTE: Mouldings should not be installed on vehicle unless sheet metal surface temperature exceeds 27°C (80°F) and moulding is at a minimum of 22°C (71°F).

   Apply new moulding.
2. Starting at front of door moulding, pull back tape protective liner approximately 75-100 mm (3-3.9 inches). Do not touch or contaminate tape surface.
3. Align moulding with marks on masking tape at rear of door and press gently forward on door removing protective liner as you proceed forward. Make sure part is lined up correctly; moulding cannot be removed once the tape adheres.

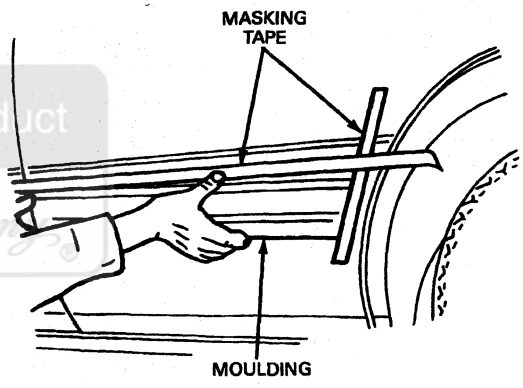

N11200-A

4. Remove masking tape and wipe area under masking tape with isopropyl alcohol to remove residue.
5. Press moulding on with hand roller applying a minimum of 140 kPa (20 psi) pressure to ensure positive tape adhesion.

Step, Cab

Removal

1. Remove the cab step mat from the step.
2. Remove step-to-body frame bolts.
3. Remove the cab step bracket-to-frame bolts.
4. Remove the step and bracket assembly from the vehicle. The step can now be removed from the bracket by removing the stud nuts.

REMOVAL AND INSTALLATION (Continued)

5. If the cab step front fender brackets are damaged, they can be removed for replacement by removing the bracket bolts. Refer to the following illustration.

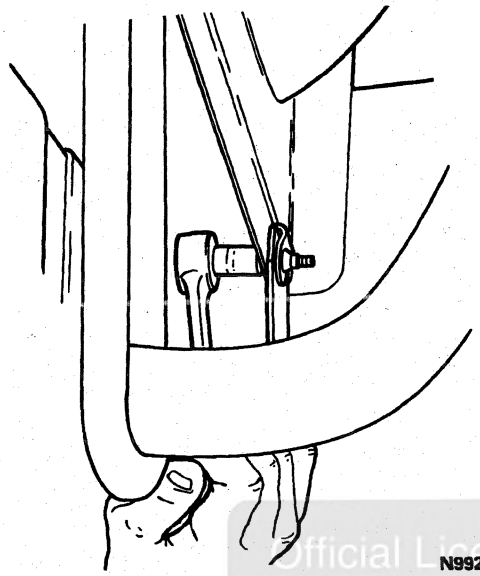

N9927-A

Installation

1. Follow removal procedure in reverse order.
2. Tighten step bracket-to-frame bolts to 20-28 N·m (15-21 lb-ft) and step-to-frame bolts to 8-11 N·m (71-97 lb-in). Tighten front fender bracket bolts to 8-11 N·m (71-97 lb-in).

Official Licensed Product
Ford Motor Company

REMOVAL AND INSTALLATION (Continued)

Cab Step Installation

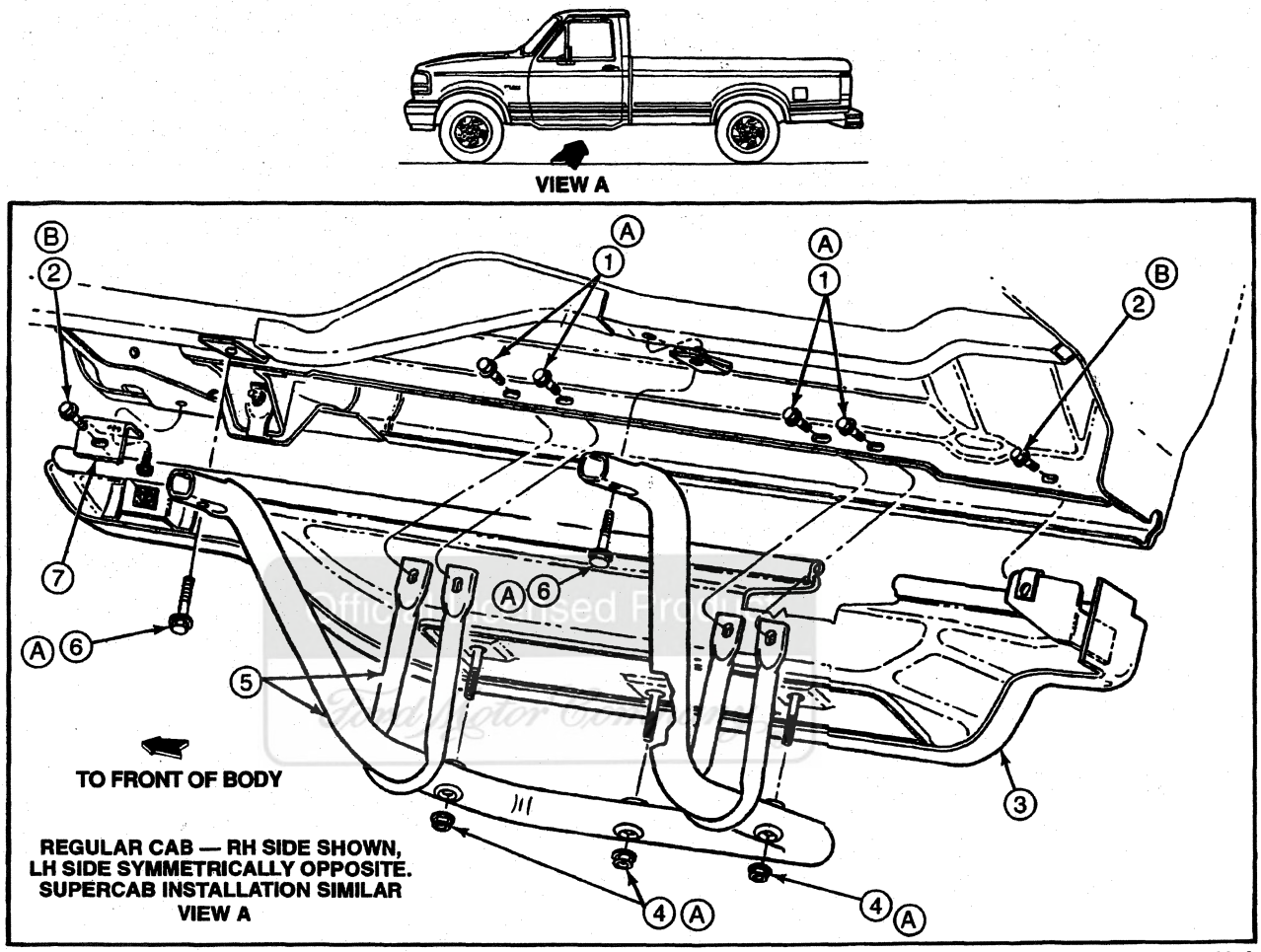

DR0219-A

Item	Part Number	Description
1	N605905-S55	Bolt
2	N605891-S55	Bolt
3	16A470	Cab Step
4	N620481-S55	Nut
5	—	Cab Step Bracket (Part of 16A506)

(Continued)

Item	Part Number	Description
6	N605909-S55	Bolt
7	16C078	Front Fender Mounting Rear Bracket
A	—	Tighten to 20-28 N·m (15-21 Lb-Ft)
B	—	Tighten to 8-11 N·m (71-97 Lb-In)

SPECIFICATIONS

LUBRICANT/ADHESIVE/CLEANER SPECIFICATIONS

Description	Part Number	Ford Specification
Foam Tape	ESB-M3G102-A	—

TORQUE SPECIFICATIONS

Description	N·m	Lb-Ft	Lb-In
Headlamp Door Screws	1.4-2.3	—	13-20
Headlamp Door Nut and Washer	4-7	—	35-62

(Continued)

SPECIFICATIONS (Continued)

TORQUE SPECIFICATIONS (Cont'd)

Description	N·m	Lb-Ft	Lb-In
Cowl Top Vent Panel-to-Cowl Top Outer Panel Screw	1.4-2.0	—	13-18
Roof Panel Weatherstrip Screw and Washer	9-14	7-10	—
Roof Panel Bumper Cover Reinforcement Screws	17-27	13-20	—

(Continued)

TORQUE SPECIFICATIONS (Cont'd)

Description	N·m	Lb-Ft	Lb-In
Step Bracket-to-Frame Bolts	20-28	15-21	—
Step-to-Frame Bolts	8-11	—	71-97
Cab Step Bracket Bolts	20-28	15-21	—
Front Fender Bracket Bolt	8-11	—	71-97
Cab Step Nut	20-28	15-21	—

Official Licensed Product
Ford Motor Company

SECTION 01-09 Mirrors, Rearview

SUBJECT	PAGE
VEHICLE APPLICATION	01-09-1
DIAGNOSIS AND TESTING	
Electrical Schematic Reference(s)	01-09-1
Mirrors, Power, Outside Rearview	01-09-1
Inspection and Verification	01-09-1
Pinpoint Tests	01-09-2
Symptom Chart	01-09-1
REMOVAL AND INSTALLATION	
Mirror Mounting Bracket	01-09-7
Mirror, Inside Rearview, Manual	01-09-6
REMOVAL AND INSTALLATION (Cont'd.)	
Mirror, Manual, Outside Rearview, Western Type, Swing-Away	01-09-3
Mirror, Power, Outside Rearview	01-09-5
Mirror Control	01-09-5
Mirror Motor	01-09-5
Mirror, Recreation Swing-Out, Dual Position	01-09-4
SPECIFICATIONS	01-09-8
SPECIAL SERVICE TOOLS/EQUIPMENT	01-09-8

VEHICLE APPLICATION

F-250 Heavy Duty, F-350 and F-Super Duty

DIAGNOSIS AND TESTING

Electrical Schematic Reference(s)

Refer to Electrical and Vacuum Troubleshooting Manual, Cell 124, Power Mirrors for schematic and connector information.

Official Licensed Product
Ford Motor Company

Mirrors, Power, Outside Rearview

Inspection and Verification

1. Verify the concern by operating the power outside rear view mirrors (17682).
2. Visually inspect the components of the power outside rear view mirror system.
3. Check the wiring harness for obvious signs of shorts, opens, bad connections, or damage.
4. If fault is not visually evident, determine the symptom, and proceed to the following symptom chart.

VISUAL INSPECTION CHART

Mechanical	Electrical
• Damaged mirror(s)	• Blown fuse • Damaged connectors • Broken or loose wiring • Corroded or poor connections

Symptom Chart

REARVIEW MIRRORS

Condition	Possible Source	Action
• Both RH and LH Mirrors Inoperative	• Circuits. • Outside rear view mirror control. • Motors.	• GO to Pinpoint Test A.
• Single Mirror Inoperative	• Circuit. • Outside rear view mirror control. • Motor.	• GO to Pinpoint Test B.
• Single Mirror Does Not Function with Switch Logic	• Circuit. • Mirror connection.	• GO to Pinpoint Test C.

DIAGNOSIS AND TESTING (Continued)

Pinpoint Tests

NOTE: Use Rotunda Digital Volt-Ohmmeter 014-00407 or equivalent to perform electrical pinpoint tests.

POWER MIRROR LOGIC TABLE

Directional Movement	LH Mirror		RH Mirror	
	Pos. Voltage (+) Circuit 54	Grd. (-) Circuit 57	Pos. Voltage (+) Circuit 54	Grd. (-) Circuit 57
Up	541	542	544	542
Down	542	541	542	544
Left	540	542	543	542
Right	542	540	542	543

PINPOINT TEST A: BOTH RH AND LH MIRRORS INOPERATIVE

Test Step		Result ▶	Action to Take
A1	FUSE CONTINUITY CHECK		
	• Check continuity through Fuse 8 (15A) in IP fuse panel. • **Is continuity fuse present?**	Yes ▶ No ▶	GO to **A2**. REPLACE fuse with one of equal value. TEST system for normal operation.
A2	CHECK FEED CIRCUIT		
	• Remove Fuse 8 (15A) from IP fuse panel. • Check continuity from Pin 1 of the outside rearview mirror control connector through either of the following: — Circuit 54 (LG/Y) from the IP fuse panel (without keyless entry). — Circuit 705 (LG/O) (with keyless entry) • **Is continuity present?**	Yes ▶ No ▶	GO to **A3**. SERVICE open in appropriate feed circuit. REINSTALL Fuse 8 (15A). TEST system for normal operation.
A3	CHECK GROUND CIRCUIT		
	• Remove Fuse 8 (15A) in IP fuse panel. • Connect ohmmeter to a known good ground and Pin 5, Circuit 57 (BK) of the outside rearview mirror control connector. • **Is continuity present?**	Yes ▶ No ▶	REPLACE outside rearview mirror control. REINSTALL Fuse 8 (15A). TEST system for normal operation. SERVICE open in Circuit 57 (BK). REINSTALL Fuse 8 (15A). TEST system for normal operation.

PINPOINT TEST B: SINGLE MIRROR INOPERATIVE

Test Step		Result ▶	Action to Take
B1	VERIFY THAT HARNESS IS CONNECTED TO MIRROR		
	• Remove front door trim panel. Refer to Section 01-05. • Verify that outside mirror control wiring is connected. • **Is harness connected?**	Yes ▶ No ▶	GO to **B2**. CHECK outside mirror control wiring connector for damage and REPAIR as necessary. CHECK outside rear view mirror for proper operation.
B2	CHECK CONTINUITY OF CIRCUITS IN HARNESS CONNECTOR		
	• Operate outside rear view mirror control and check for continuity between outside mirror control wiring connector and outside rear view mirror at the following circuits: — left mirror 540 (R), 541 (DB), 542 (Y) — right mirror 542 (Y), 543 (DG), 544 (P) • **Do circuits have continuity?**	Yes ▶ No ▶	REPLACE the outside rearview mirror motor (if serviced) or outside rear view mirror Using Power Mirror Logic Table in this section, TRACE circuits to connector and SERVICE as required.

Licensed Product Ford Motor Company

DIAGNOSIS AND TESTING (Continued)

PINPOINT TEST C: SINGLE MIRROR DOES NOT FUNCTION WITH SWITCH LOGIC

Test Step		Result	Action to Take
C1	VERIFY CIRCUIT LOGIC AT HARNESS CONNECTOR TO MIRROR		
	• Using a putty knife, pry the mirror switch up and out of the bezel. • Verify circuit logic at harness connector to outside rear view mirror with switch operation. Refer to Power Mirror Logic Table in this section. • **Does outside rear view mirror control operate properly?**	Yes ▶ No ▶	REPLACE outside rearview mirror motor kit. GO to **C2**.
C2	CHECK CIRCUIT LOGIC AT SWITCH CONNECTOR		
	• Verify circuit logic at switch connector. Refer to Power Mirror Logic Table in this section. • **Is circuit logic OK at outside rear view mirror control?**	Yes ▶ No ▶	TRACE along outside mirror control wiring to determine where cross circuitry took place. SERVICE as required. REPLACE outside rear view mirror control and RETEST mirror operation.

REMOVAL AND INSTALLATION

Mirror, Manual, Outside Rearview, Western Type, Swing-Away

Removal

1. NOTE: If outside rear view mirror head (17723) is broken, replace outside rear view mirror (17682). Do not attempt to replace outside rear view mirror glass (17K707).

   Remove screws retaining mirror to door.
2. Remove mirror.

Installation

1. Position mirror to vehicle door.
2. Install retaining screws and secure mirror to door.

Official Licensed Product Ford Motor Company

REMOVAL AND INSTALLATION (Continued)

Mirror, Western Type, Swing-Away

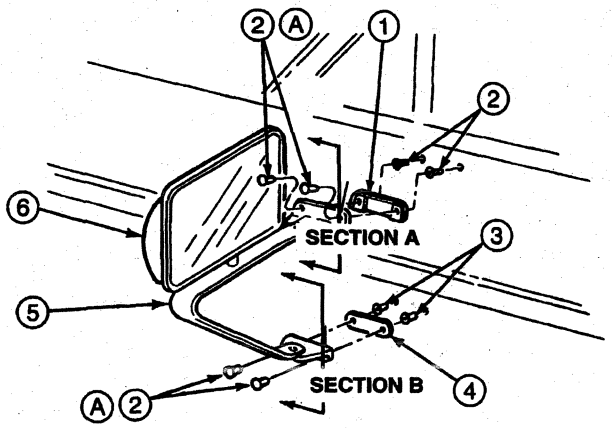

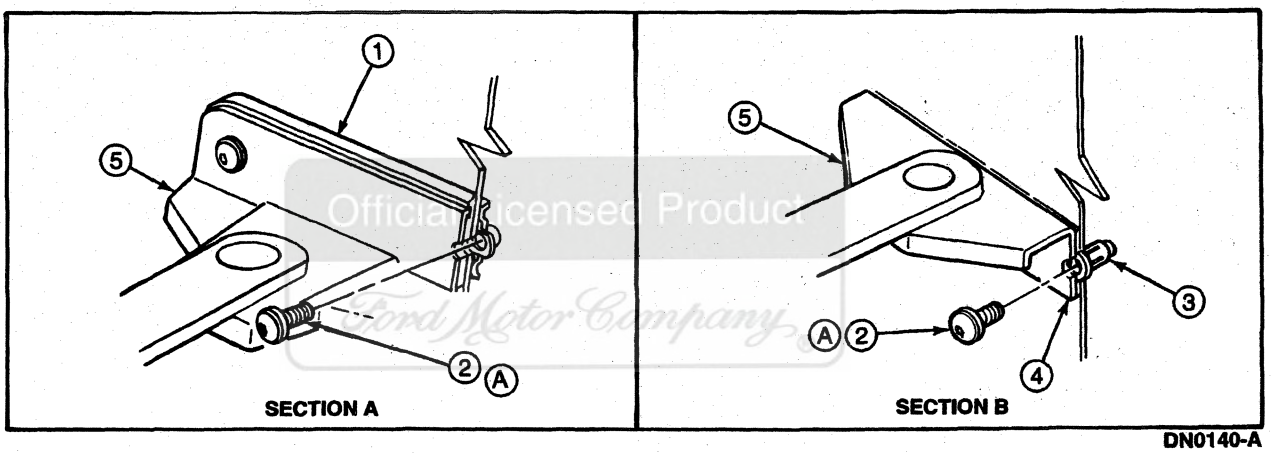

DN0140-A

Item	Part Number	Description
1	17724	Outside Rear View Mirror Gasket (Upper)
2	N806345-S47	Screw(s)
3	N803763-S36	Rivet Nuts
4	17724	Outside Rear View Mirror Gasket (Lower)

(Continued)

Item	Part Number	Description
5	17682	Outside Rear View Mirror
6	17723	Outside Rear View Mirror Head
A	—	Tighten to 4-12 N·m (35-106 Lb-In)

Mirror, Recreation Swing-Out, Dual Position

Removal

1. NOTE: If outside rear view mirror head (17723) is broken, replace outside rear view mirror (17682). Do not attempt to replace outside rear view mirror glass (17K707).

   Remove four screws from front door (20124).
2. Remove outside rear view mirror.

Installation

1. Position outside rear view mirror to door.

REMOVAL AND INSTALLATION (Continued)

2. Install four retaining screws, and secure mirror to door.

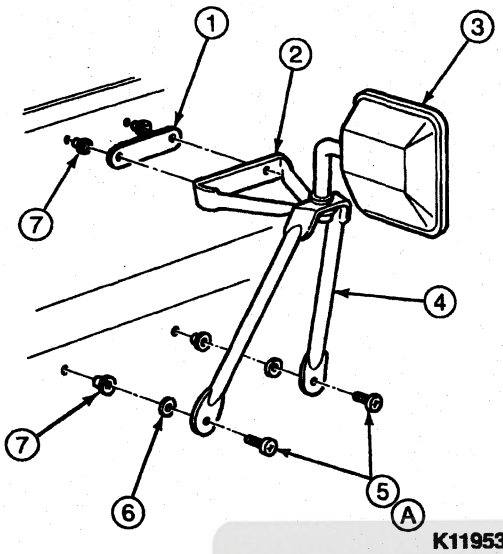

K11953-F

Item	Part Number	Description
1	17724	Outside Rear View Mirror Gasket — Upper
2	17016	Bracket Assy
3	17723	Outside Rear View Mirror Head
4	17059	Bracket Assy
5	N806345-S47	Screw(s) (4 Req'd)
6	17724	Outside Rear View Mirror Gasket — Lower
7	N803763-S36	Rivet-Nut (4 Req'd)
A	—	Tighten to 4-8 N·m (35-71 Lb-In)

Mirror, Power, Outside Rearview

Removal

1. Remove front door trim panel (23942). Refer to Section 01-05.
2. Disconnect outside mirror control wiring (14A684) on power mirror.
3. Remove two screws retaining outside rear view mirror (17682) to the exterior of the front door (20124).
4. Remove one screw retaining outside rear view mirror to the interior of the front door.
5. Remove outside rear view mirror.

Installation

1. Follow removal procedure in reverse order.

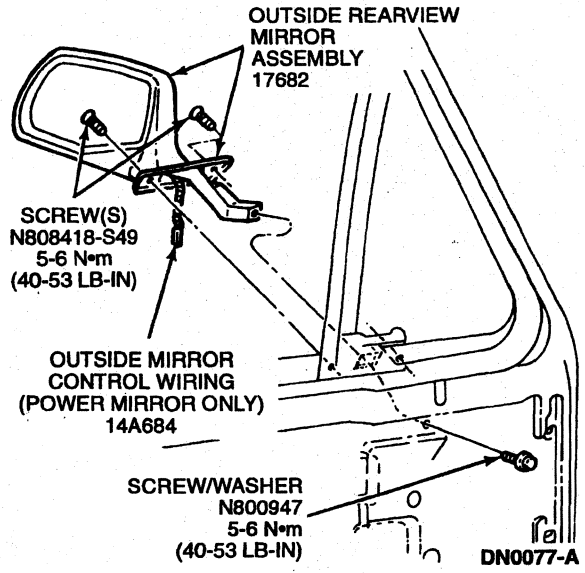

Mirror Control

Removal

1. Insert a small, thin-bladed screwdriver into spring tab slots located at front and rear of window regulator switch housing (14527). Apply pressure to make the window regulator switch housing pop out.
2. NOTE: The switch is held in place by an electrical contact pin.

   Remove three screws retaining connectors to window regulator switch housing.
3. Remove outside rear view mirror control (17B676) by carefully prying the outside rear view mirror control from connector using a small screwdriver.

Installation

1. NOTE: The outside rear view mirror control is keyed to the connector and can be installed only one way.

   Follow removal procedure in reverse order.

Mirror Motor

Removal

1. Remove the glass assembly. Mark the motor with tape or grease pencil to indicate top of motor.
2. Remove the four screws retaining the motor to the mirror body.
3. Pull motor away from the mirror body.
4. Remove the plastic cover plate from the back of the motor. Pull off by hand.
5. Use masking tape on the wires. Mark on the wire its location in the motor with the terminal number shown on the motor where the wires plug in.
6. Carefully pull the wires / terminals out of the motor.

Official Licensed Product Motor Company

REMOVAL AND INSTALLATION (Continued)

Installation

1. Install wires into the motor by matching the terminal number marked on the wires and on the motor. Remove masking tape from the wires.
2. Make sure wires are placed in the retaining slots in back of motor, then align the opening in the plastic cover plate with the wires on the back of motor and push on back cover.
3. Make sure the rubber seal is properly installed on the motor.
4. Position motor in mirror body using the mark (added during removal) indicating top of motor and line up the four screw holes.
5. Install the four screws and hand-tighten. Do not overtighten.
6. Install the glass assembly.

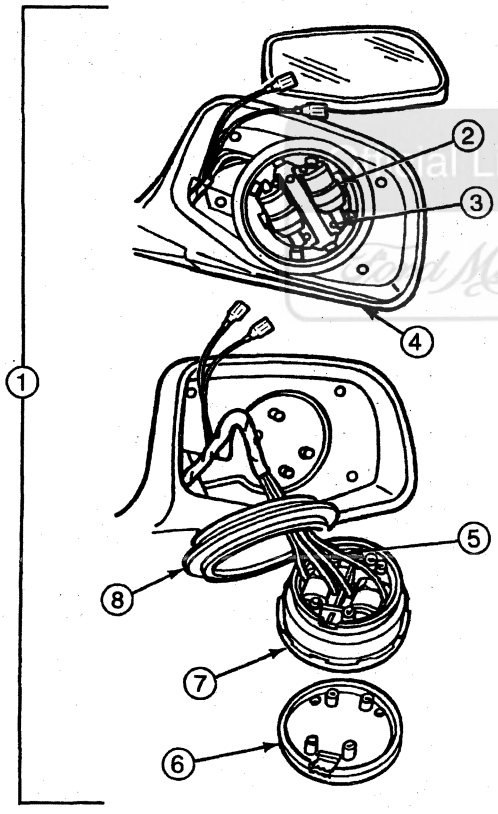

DN0053-A

Item	Part Number	Description
1	17682	Outside Rear View Mirror
2	—	Power Mirror Motor (Part of 17682)
3	—	Screws (4 Req'd) (Part of 17682)
4	—	Outside Rearview Mirror Housing (Part of 17682)
5	—	Connecting Wires to Motor (Part of 17682)
6	—	Power Mirror Motor Cap (Part of 17682)
7	—	Power Mirror Motor (Part of 17682)
8	—	Rubber Gasket (Part of 17682)

(Continued)

Mirror, Inside Rearview, Manual

SPECIAL SERVICE TOOL(S) REQUIRED

Description	Tool Number
Rearview Mirror Replacer	T94P-17700-AH

Removal

1. Grasp inside rear view mirror (17700) firmly.
2. Insert a small flat-bladed screwdriver into slot.
3. Pull screwdriver handle rearward until mirror snaps off inside rearview mirror bracket.

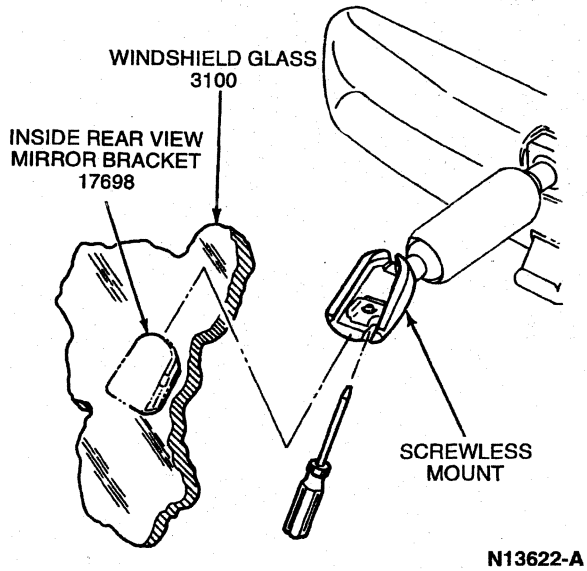

N13622-A

REMOVAL AND INSTALLATION (Continued)

Installation

1. NOTE: To ensure proper mounting installation, mirror support must be flush to inside rear view mirror bracket (17698) at point X when inside rear view mirror is fully seated.

   Slide mirror mount downward onto inside rear view mirror bracket using Rearview Mirror Replacer Tool T94P-17700-AH.

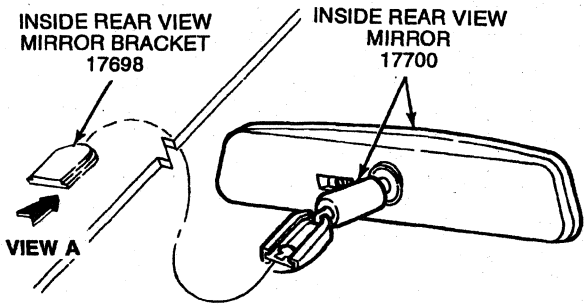

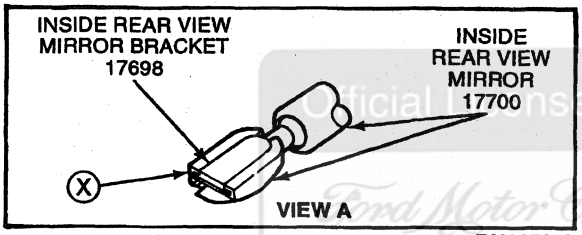

Official Licensed Product
Ford Motor Company

Mirror Mounting Bracket

Installation

1. Using a wax pencil, locate and mark the inside rear view mirror (17700) on outside windshield surface.
2. NOTE: If the clear vinyl wafer remained on the windshield glass, apply low heat (heat gun) until the wafer softens. Peel the vinyl wafer from the glass, taking care not to scratch or mar the glass surface.

   NOTE: Do not contaminate clean area.

   Thoroughly clean inside of the windshield with mild abrasive cleaning powder and clean cloth saturated in isopropyl alcohol to remove old adhesive. Use paper towel to remove all cleaner from the windshield.
3. Roughen the bonding surface of the inside rear view mirror bracket (17698) with fine grit sandpaper. Wipe surface clean with a paper towel soaked in alcohol.
4. If vinyl wafer is still adhered to inside rear view mirror bracket, use low heat (heat gun) until the wafer softens, and peel it off.
5. NOTE: Do not contaminate clean inside rear view mirror bracket.

   Using the applicator, apply a generous amount of accelerator to the bonding surface of the inside rear view mirror bracket and the windshield glass. Allow the accelerator material to dry for three minutes.
6. NOTE: Do not touch the mounting surfaces.

   Squeeze only three drops of Rearview Mirror Adhesive D9AZ-19554-CA or equivalent meeting Ford specification ESB-M2G176-A in a line from top to bottom on the mounting surface of the inside rear view mirror bracket. It is not necessary to spread the adhesive.

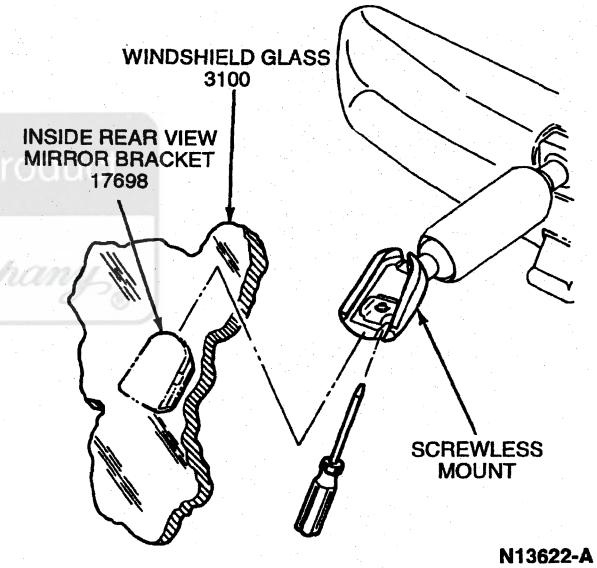

7. NOTE: The 9.5-mm (3/8-inch) circular depression in inside rear view mirror bracket must be down and toward the inside of the passenger compartment.

   Quickly position inside rear view mirror bracket to windshield, using the locator marked on the outside of the windshield glass.
8. Press the inside rear view mirror bracket against the windshield for about one minute.
9. Allow the adhesive to set for five minutes.
10. Remove any excess adhesive material from the windshield with an alcohol-dampened rag.

REMOVAL AND INSTALLATION (Continued)

11. Slide inside rear view mirror downward onto inside rear view mirror bracket.

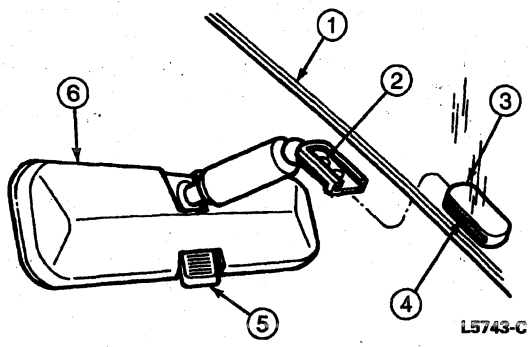

Item	Part Number	Description
1	03100	Windshield Glass
2	17698	Locking Tab
3	19554	Vinyl Pad
4	17698	Inside Rear View Mirror Bracket
5	—	Day/Night Lever (Part of 17700)
6	17700	Inside Rear View Mirror

SPECIFICATIONS

LUBRICANT/ADHESIVE/CLEANER SPECIFICATIONS

Description	Part Number	Ford Specification
Rearview Mirror Adhesive	D9AZ-19554-CA	ESB-M2G176-A

TORQUE SPECIFICATIONS

Description	N·m	Lb-In
Screw, Recreation Swing-Out Mirror	4-8	35-71
Screw, Western Swing-Away Mirror	4-12	35-106
Screw, Power Outside Rearview Mirror	5-6	40-53

SPECIAL SERVICE TOOLS/EQUIPMENT

SPECIAL SERVICE TOOLS REQUIRED

Tool Number/ Description	Illustration
T94P-17700-AH Rearview Mirror Replacer	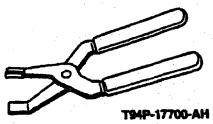

ROTUNDA EQUIPMENT

Model	Description
014-00407	Digital Volt-Ohmmeter

Official Licensed Product Ford Motor Company

SECTION 01-10 Seats and Tracks

SUBJECT	PAGE
VEHICLE APPLICATION	01-10-1
DIAGNOSIS AND TESTING	
Electrical Schematic Reference(s)	01-10-1
Pinpoint Tests	01-10-3
Power Seat	01-10-1
Inspection and Verification	01-10-1
Symptom Chart	01-10-2
REMOVAL AND INSTALLATION	
Captain Chairs, Front	01-10-6
Latch Striker, Front Seat Back	01-10-15
Latch, Bench Seat	01-10-12
Latch, Front	01-10-13
Latch, Rear Seat	01-10-14
Latch, Split Back Bench Seat	01-10-13
REMOVAL AND INSTALLATION (Cont'd.)	
Pump, Front Seat Back Pad Adjusting	01-10-15
Seat Assembly, 40/20/40 Bench	01-10-4
Seat Track, Manual Bench	01-10-9
Seat Track, Rear, Crew Cab	01-10-10
Seat, Driver or Passenger, Bench	01-10-3
Seat, Rear, Bench, Crew Cab	01-10-6
Seat, Rear, Forward Facing, SuperCab	01-10-7
Seat, Rear, Side-Mounted Folding, SuperCab	01-10-6
Switch, Seat Control, Seat Back	01-10-11
Switch, Seat Control, Seat Regulator	01-10-12
SPECIFICATIONS	01-10-16
SPECIAL SERVICE TOOLS/EQUIPMENT	01-10-16

VEHICLE APPLICATION

F-250 Heavy Duty, F-350 and F-Super Duty

DIAGNOSIS AND TESTING

Official Licensed Product Ford Motor Company

Electrical Schematic Reference(s)

Refer to Electrical and Vacuum Troubleshooting Manual, Cell 122, Power Lumbar Seats for schematic and connector information.

Power Seat

Inspection and Verification

1. Verify customer concern by operating the power seat system.
2. Visually inspect the components of the power seat system.

VISUAL INSPECTION CHART

Mechanical	Electrical
• Damaged air tubes/hoses • Improper air hose routing • Damaged lumbar support bags • Damaged lumbar support switch	• Blown fuse: — 50A POWER SEAT • Loose or corroded connectors • Damaged wiring • Damaged switches • Damaged motors

3. Check the wiring harness for obvious signs of shorts, opens, bad connections or damage.
4. If one of the power seat positions (slide, tilt, lift) does not work, check for opens/damage in the pigtail circuit wires coming off the seat back control switch that lead to the seat regulator motors.
5. Check the lumbar support system for disconnected, kinked, or damaged air tubes/hoses. Also, look for leaking/damaged lumbar support bags.
6. If an obvious cause for malfunction can be found, correct the cause of the malfunction (if possible) before proceeding further.
7. If the fault is not visually evident, determine the symptom and proceed to the following symptom chart.

DIAGNOSIS AND TESTING (Continued)

Symptom Chart

SEATS AND TRACKS, FRONT

Condition	Possible Source	Action
• Power Seat Moves, Noisy Operation	• Dirty tracks. • Damaged seat regulator motor. • Misaligned track to seat / floor.	• CLEAN tracks. • REPLACE seat regulator motor. • SERVICE or REPLACE front seat tracks as required.
• Power Seat Moves but Is Loose	• Loose attaching hardware. • Worn or damaged tracks / gears.	• TIGHTEN attaching hardware. • REPLACE track unit.
• Power Seat Does Not Make Full Travel	• Obstructed track. • Damaged track.	• REMOVE obstruction. • REPLACE track.
• Power Seat Does Not Move Horizontally or Vertically	• Harness. • Switch. • Motor. • Ground.	• GO to Pinpoint Test A.
• Front Seat Back Pad Adjusting Pump Inoperative	• Fuse burned out. • Loose electrical connections. • Worn or damaged motor. • Worn or damaged seat back control switch.	• REPLACE fuse. If fuse blows again, CHECK for short circuit. • SECURE connections at front seat back pad adjusting pump, seat back control switch and floor harness. • REPLACE motor. • REPLACE front seat back pad adjusting pump.
• Front Seat Back Pad Adjuster Only Partially Inflates	• Loose air line connections. • Cut in front seat back pad adjusting hoses or tubes. • Kinked front seat back pad adjusting hoses or tubes. • Worn or damaged seat regulator control switch. • Worn or damaged front seat back pad adjuster. • Worn or damaged front seat back pad adjusting pump. • Air lines reversed at seat regulator control switch.	• SECURE all connections as necessary. • SERVICE or REPLACE as necessary. • ROUTE front seat back pad adjusting hoses or tubes as necessary. • REPLACE seat back control switch. • REPLACE bolster support bag. • REPLACE pump. • REVERSE air lines at switch.
• Front Seat Back Pad Adjuster Will Not Maintain Inflated Position	• Improper tube / front seat back pad adjusting hose connections. • Worn or damaged seat back control switch. • Worn or damaged front seat back pad adjuster.	• Properly CONNECT all front seat back pad adjusting hoses. • REPLACE seat regulator control switch. • REPLACE front seat back pad adjuster.
• Seat Back Control Switch Inflates Lumbar	• Air lines reversed.	• REVERSE air lines where connected at front seat back.
• Front Seat Back Pad Adjuster Inflates but Does Not Deflate	• Worn or damaged seat back control switch. • Worn or missing front seat back pad adjuster return springs. • Worn or damaged mechanism to front seat back pad adjuster. • Kinked air hoses or tubes.	• REPLACE seat back control switch. • REPLACE return springs. • REPLACE mechanism to front seat back pad adjuster. • ROUTE front seat back pad adjusting hoses or tubes as necessary.
• Front Seat Back Pad Adjuster Detaches from Front Seat Back	• Front seat back pad adjuster stops damaged.	• REPLACE mechanism.

Official Licensed Product Ford Motor Company

DIAGNOSIS AND TESTING (Continued)

Pinpoint Tests

PINPOINT TEST A: POWER SEAT DOES NOT MOVE HORIZONTALLY OR VERTICALLY

Test Step		Result	Action to Take
A1	CHECK TRACK MOVEMENT		
	• Check Fuse 5 (50A) in power distribution box. • **If fuse OK?**	Yes ▶ No ▶	GO to **A2**. REPLACE fuse and RECHECK.
A2	GROUND CHECK		
	• Disconnect seat motor harness. • Using Rotunda Digital Voltmeter 014-00407 or equivalent, connect one terminal to a known ground. • Check ground Circuit 57 (BK) of the body harness. • **Is the resistance less than 5 ohms?**	Yes ▶ No ▶	GO to **A3**. SERVICE Circuit 57 (BK) and RETEST system.
A3	VERIFY POWER SEAT MOTOR HARNESS		
	• Remove driver's seat from vehicle. • Disconnect seat regulator control switch. • Using Rotunda Digital Volt-Ohmmeter 014-00407 or equivalent, check continuity between Pin 7, Circuit 517 (BK/W) at seat regulator control switch connector harness to main power connector Circuit 517 (BK/W). • **Is there continuity?**	Yes ▶ No ▶	GO to **A4**. REPLACE seat regulator and motor harness. RETEST system.
A4	DRIVER SEAT MOTOR HARNESS CHECK		
	• Disconnect 6-pin motor harness connector from seat motor connector and 8-pin connector from seat regulator control switch connector. • Using the following table, compare continuity between the following pins using a DVOM.	Yes ▶ No ▶	REMOVE and REPLACE front seat track. REPLACE seat motor harness and RETEST system.

6-Pin Connector	8-Pin Connector	Continuity
Pin 3	Pin 8	All <100 Ohms
Pin 5	Pin 1	<100 Ohms
Pin 6	Pin 6	<100 Ohms
Pin 1	Pin 3	<100 Ohms
Pin 4	Pin 4	<100 Ohms
Pin 2	Pin 2	<100 Ohms

• **Are above continuities present?**

Licensed Product Ford Motor Company

REMOVAL AND INSTALLATION

Seat, Driver or Passenger, Bench

Removal

CAUTION: Use care when handling front seat (60012) and front seat tracks (61704). Dropping assembly or sitting on front seat when seat is not secured in vehicle can result in damaged components.

1. Disconnect wiring, if so equipped.
2. Remove damaged bolts and nuts (one on each side) retaining front seat to front floor pan (11135). Discard used bolts.
3. Lift the seat and track assembly out of the vehicle.

Installation

1. Apply Caulking Cord D6AZ-19560-A or equivalent meeting Ford specification ESB-M4G32-A around front seat track assembly attaching bolt and stud locations on front floor pan.
2. Position front seat and front seat tracks into vehicle. Secure to front floor pan with the new retaining bolts and nuts with the same part number as indicated. Tighten bolts and nuts to 47-63 N·m (35-46 lb-ft).
3. Connect wiring, if so equipped.

REMOVAL AND INSTALLATION (Continued)

Front Seat, Bench, Installation

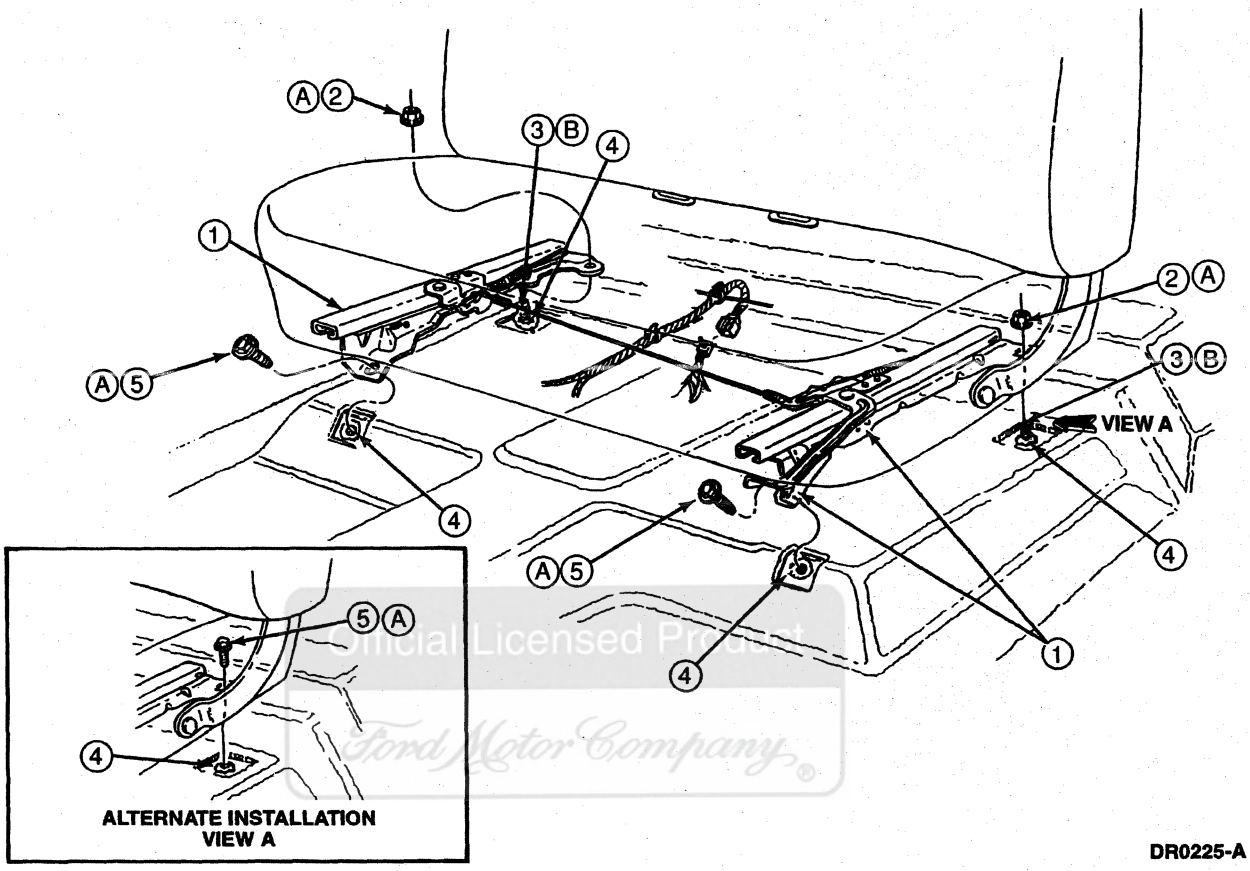

DR0225-A

Item	Part Number	Description
1	61704	Front Seat Track
2	N621942-S411	Nut (2 Req'd)
3	N806966-S411	Stud (2 Req'd)
4	ESB-M4G32-A	Sealer, 5.0 mm Diameter (4 Places)

(Continued)

Item	Part Number	Description
5	N806965-S2	Bolt (2 Req'd) (Alternate Installation)
A	—	Tighten to 47-63 N·m (35-46 Lb-Ft)
B	—	Studs Must Be Fully Seated

Seat Assembly, 40/20/40 Bench

Removal

1. Disconnect wiring, if so equipped.
2. Fold front seat back forward and remove screws attaching center safety belt bracket to center seat.
3. Remove screws and nuts (one on each side) retaining front seat track to front floorpan. Discard used screws.
4. Lift the seat and track assembly out of the vehicle.
5. If servicing a front seat (60012) or center seat, remove nuts from under seat frame and remove seat.

Installation

1. Apply Caulking Cord D6AZ-19560-A or equivalent that meets Ford specification ESB-M4G32-A around front seat track assembly attaching new screw and stud locations on front floorpan.
2. If front seat has been removed from front seat back frame (61018), position front seat on front seat back frame and tighten nuts to 18-27 N·m (13-20 lb-ft).

REMOVAL AND INSTALLATION (Continued)

3. Position front seat and front seat tracks into vehicle, secure to front floorpan with new retaining screws and nuts. Tighten the screws and nuts to 47-63 N·m (35-46 lb-ft).
4. Connect wiring, if so equipped.
5. Fold seat back forward and position safety belt bracket onto center seat. Tighten screws.

40/20/40 Bench

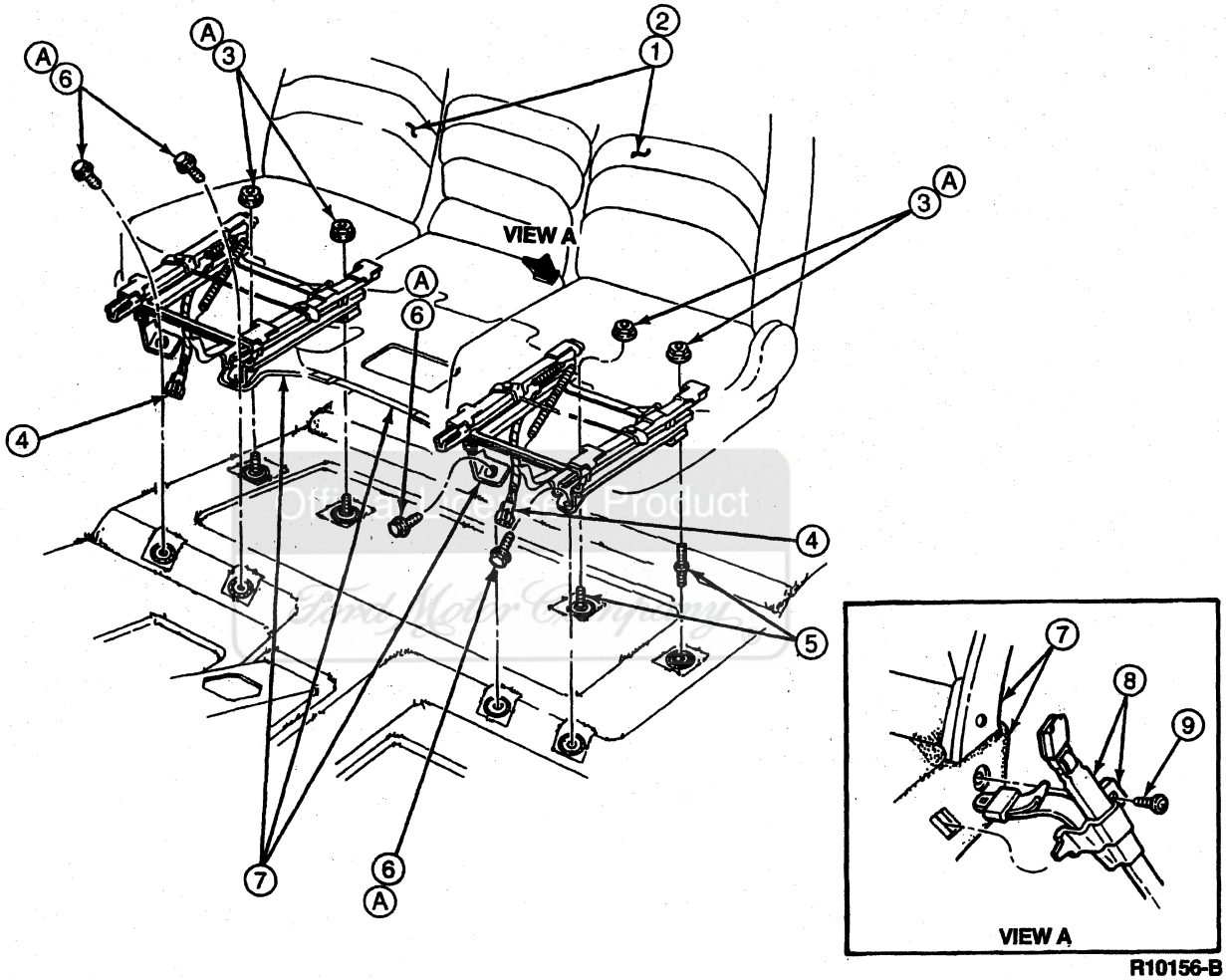

Item	Part Number	Description
1	60004	Front Seat (RH)
2	60012	Front Seat (LH)
3	N621942-S411	Nut and Washer Assy (2 Req'd Each Seat)
4	—	Wiring Connector (Part of 14401)
5	N80L366-S411	Stud (2 Req'd Each Seat)

(Continued)

Item	Part Number	Description
6	N806965-S411	Screw (2 Req'd Each Seat)
7	60018	Center Seat
8	612B18	Safety Belt Assy
9	56904-S424	Screw (1 Req'd Each Safety Belt)
A	—	Tighten to 47-63 N·m (35-46 Lb-Ft)

REMOVAL AND INSTALLATION (Continued)

Captain Chairs, Front

Removal

1. Remove screws attaching front seat support (60094) to front floor pan (11135).
2. Lift seat and front seat tracks (61704) from vehicle.

Installation

1. Position seat and front seat tracks onto front floor pan and secure screws.
2. Apply Caulking Cord D6AZ-19560-A or equivalent meeting Ford specification ESB-M4G32-A around driver seat support assembly attaching bolt locations on front floor pan.
3. Tighten screws and nuts to 47-63 N·m (35-46 lb-ft).

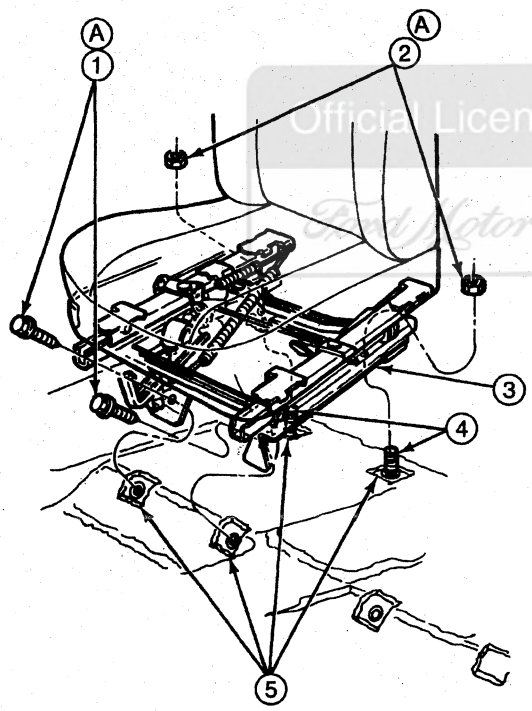

PASSENGER SIDE SHOWN
DRIVER SIDE TYPICAL

DR0226-A

Item	Part Number	Description
1	N8066965-S2	Screw and Washer Assy
2	N621942-S411	Nut (2 Req'd)
3	60094	Front Seat Support
4	N806966-S411	Stud (2 Req'd)
5	D6AZ-19560-A	Caulking Cord (ESB-M4G32-A)
A	—	Tighten to 47-63 N·m (35-46 Lb-Ft)

(Continued)

Seat, Rear, Bench, Crew Cab

Removal

1. Remove the seat track-to-floorpan retaining screws (two on each side).
2. Lift the seat and track assembly out of the vehicle.

Installation

1. Position seat and track assembly in vehicle and secure with seat track-to-floorpan retaining screws (two on each side).
2. Apply Caulking Cord D6AZ-19560-A or equivalent meeting Ford specification ESB-M4G32-A under seat track assembly.
3. Tighten the screws to 25-44 N·m (18-32 lb-ft).

Seat, Rear, Side-Mounted Folding, SuperCab

Removal

1. Remove seat bracket-to-floor screw and washer assemblies.
2. Remove the seat assembly.
3. Remove bumper screws to retainer.
4. Remove the bumper.
5. Remove retainer screws to trim panel.
6. Remove the retainer assembly.

Installation

1. Follow removal procedure in reverse order.
2. Tighten screw and washer assemblies to 30-40 N·m (22-30 lb-ft).

REMOVAL AND INSTALLATION (Continued)

Rear Side-Mounted Seats, SuperCab

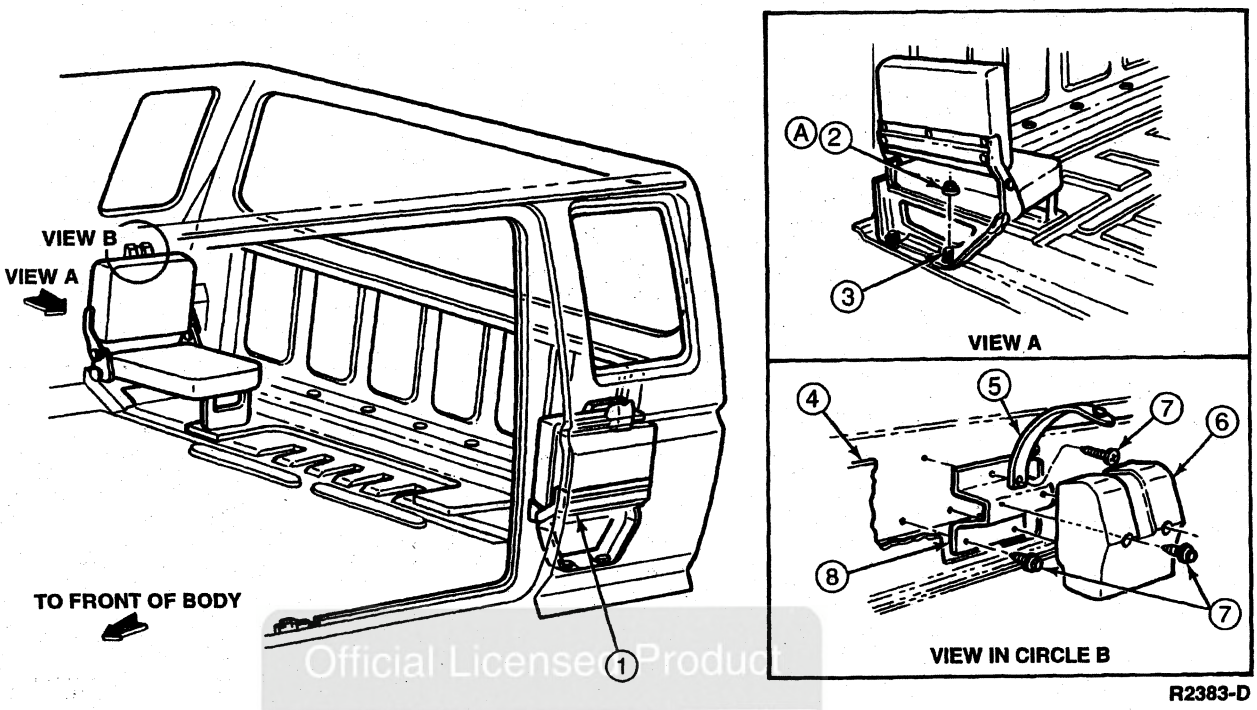

R2383-D

Item	Part Number	Description
1	60026	Seat Assy Rear Trim
2	N621942-S411	Nut (2 Req'd Each Side)
3	N801366-S411	Stud (2 Req'd Each Side)
4	52018	Panel
5	600A84	Rear Seat Cushion Retainer

(Continued)

Item	Part Number	Description
6	624A16	Rear Seat Back Bumper
7	382413-S58	Screw
8	613A70	Rear Seat Back Bumper Plate
A	—	Tighten to 30-40 N·m (22-30 Lb-Ft)

Seat, Rear, Forward Facing, SuperCab

Removal

1. Release rear seat back latch striker (62440) and put the rear seat back frame (613A38) in the fold-down position.
2. Remove safety belts. Refer to Section 01-20.
3. Remove the screw and washer assemblies attaching rear seat back cover (66600) to rear seat back frame.
4. Lift up rear seat back cover and remove rear seat back cover.
5. Remove panel and support assembly-to-floor screws and washers.
6. Pull rear seat back release latch (61382) and remove rear seat cushion frame (63160) and rear seat cushion cover (63804).
7. If removing rear seat back release latch, remove four attaching screws and remove the rear seat back release latch. Screws run through panel and support assembly and into rear seat back release latch.
8. Move rear seat cushion pad (63840) so bottom panel is toward you.
9. Remove screws to panel and support assembly.
10. Feed strap to rear seat back release latch through rear seat cushion pad and rear seat cushion cover.
11. Remove rear seat cushion pad and rear seat cushion cover.

Installation

1. NOTE: Rear seat latching effort is 4-25 pounds static force applied adjacent striker.

   Follow the removal procedure in reverse order.

Official License Product
Ford Motor Company

REMOVAL AND INSTALLATION (Continued)

Rear Seat Back, SuperCab

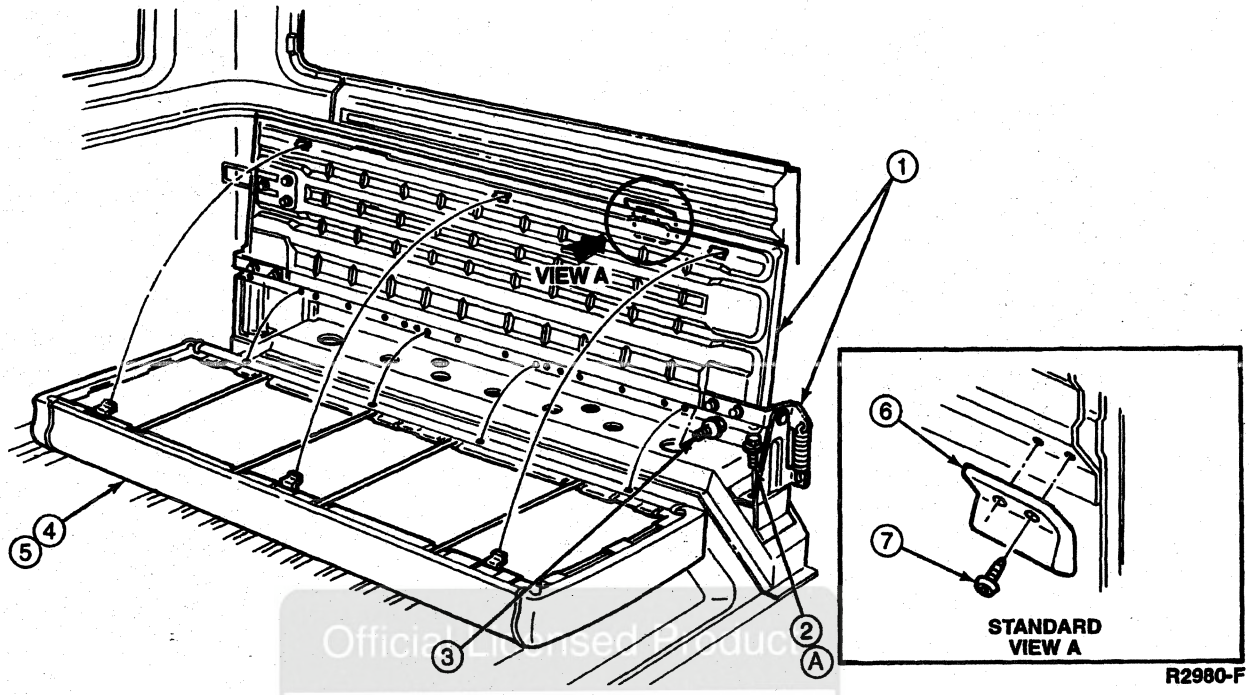

Item	Part Number	Description
1	60518	Rear Seat Back to Floor Panel and Support Assy
2	N606701-S2	Bolt and Washer Assy
3	N800351-S2	Screw and Washer Assy
4	66800	Rear Seat Back Pad

(Continued)

Item	Part Number	Description
5	63160	Rear Seat Cushion Frame
6	624A16	Rear Seat Back Bumper Assy (LH Only)
7	382413-S2	Screws (2 Req'd)
A	—	Tighten to 25-44 N·m (19-32 Lb-Ft)

Official Licensed Product
Ford Motor Company

REMOVAL AND INSTALLATION (Continued)

Rear Seat Cushion Panel and Support, SuperCab

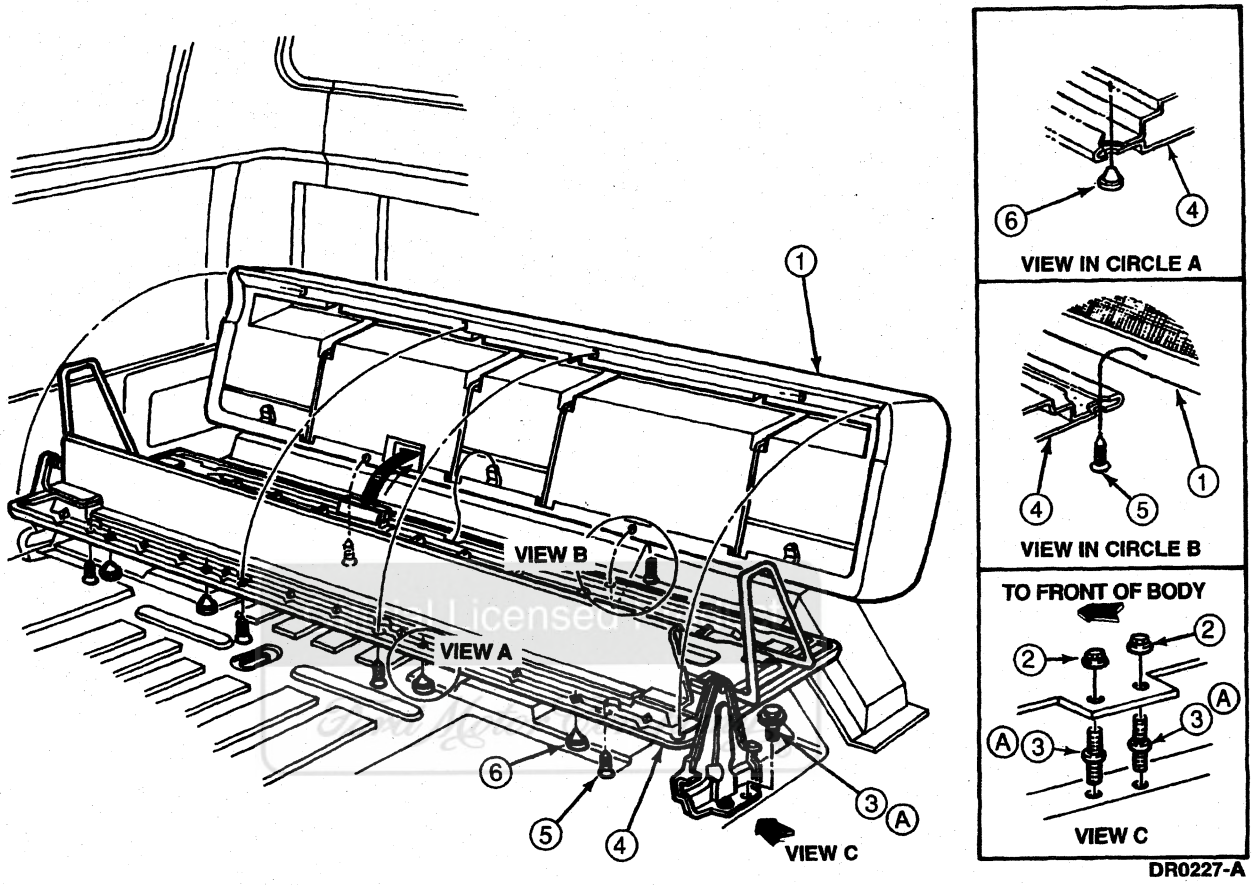

Item	Part Number	Description
1	63160	Rear Seat Cushion Frame and Rear Seat Frame
2	N621942-S58	Nut (4 Req'd)
3	N806966-S411	Stud (4 Req'd)

(Continued)

Item	Part Number	Description
4	60544-A	Panel and Support Assy
5	N800485-S58	Screw and Washer (8 Req'd)
6	N380004-S	Bumper (4 Req'd)
A	—	Tighten to 26-34 N·m (19-25 Lb-Ft)

Seat Track, Manual Bench

Removal

CAUTION: Use care when handling front seat (60012) and front seat tracks (61704). Dropping assembly or sitting on seat when not secured in vehicle can result in damaged components.

1. Remove bench seat.
2. Disconnect seat track rod assembly from front seat tracks.
3. Remove screws attaching front seat tracks to front seat cushion frame and spring (63100).
4. Remove front seat tracks from front seat cushion frame and spring.

Installation

1. Follow removal procedure in reverse order.
2. Tighten screws to 18-27 N·m (13-20 lb-ft).

REMOVAL AND INSTALLATION (Continued)

Seat Track-to-Front Seat Cushion Pad Installation

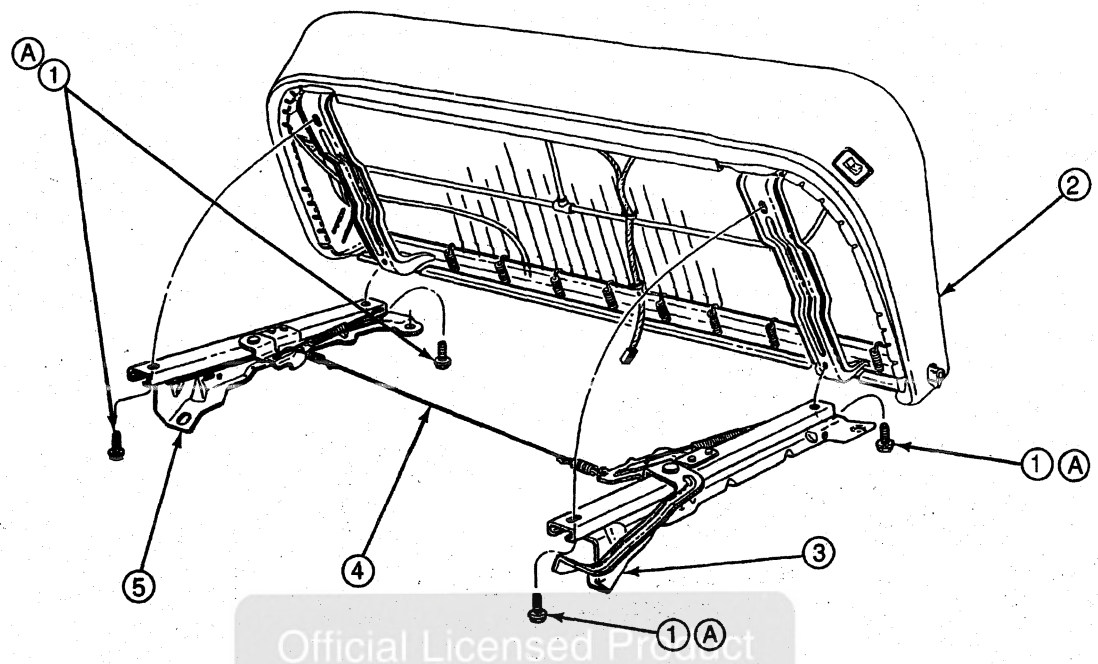

R8233-E

Official Licensed Product
Ford Motor Company

Item	Part Number	Description
1	384871-S58	Screw
2	632A22	Front Seat Cushion Pad
3	61704	Front Seat Track (LH)

(Continued)

Item	Part Number	Description
4	61802	Rod Assy
5	61704	Front Seat Track (RH)
A	—	Tighten to 18-27 N·m (13-20 Lb-Ft)

Seat Track, Rear, Crew Cab

Removal

1. Remove the bench seat.
2. Disconnect the small tension spring from the left seat track and the tie rod.
3. Disconnect the seat track latch tie rod from the latches on the seat tracks.
4. **CAUTION: Use care when handling seat and track assembly. Dropping assembly or sitting on seat when not secured in vehicle can damage seat track components.**

   Remove the seat track-to-seat cushion screws and remove the tracks from the cushion.

Installation

1. Follow removal procedure in reverse order.
2. Lubricate the seat track assemblies using Multi-Purpose Grease DOAZ-19584-AA or equivalent meeting Ford specifications ESR-M1C159-A and ESB-M1C93-A.
3. Tighten track-to-floorpan screws to 26-34 N·m (19-25 lb-ft).

REMOVAL AND INSTALLATION (Continued)

Rear Seat Tracks, Crew Cab

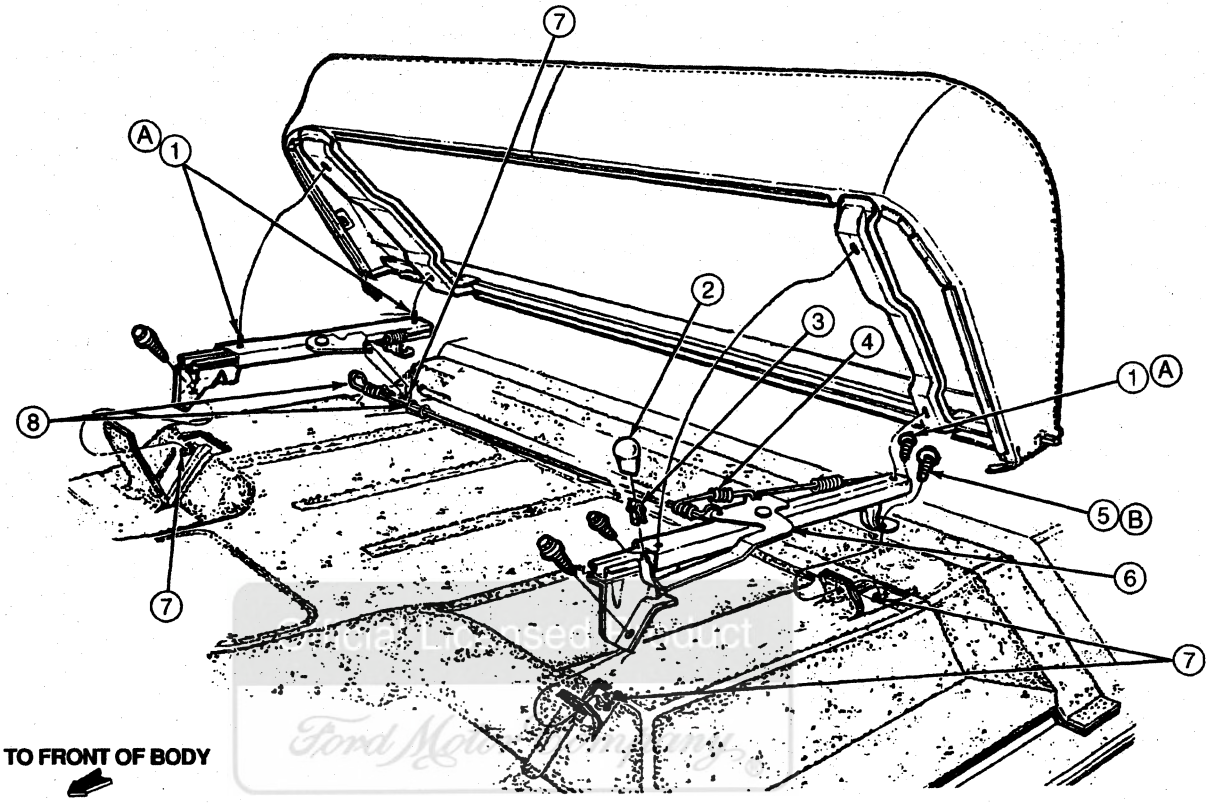

R2392-G

Item	Part Number	Description
1	384871-S2	Screw
2	61755-A	Handle
3	618B58	Front Seat Track Adjusting Handle Retainer
4	62600	Spring
5	N606703-S2	Screw
6	61704	Front Seat Track

(Continued)

Item	Part Number	Description
7	D6AZ-19560-A	Caulking Cord (ESB-M4G32-A)
8	61802-A	Tie Rod for Front Seat Track
A	—	Tighten to 17-27 N·m (13-20 Lb-Ft)
B	—	Tighten to 26-34 N·m (19-25 Lb-Ft)

Switch, Seat Control, Seat Back

Removal

1. Open hood (16612) and disconnect battery ground cable (14301).
2. Open front door (20124) and remove front seat cushion frame and spring (63100) assembly.
3. Remove seat regulator control processor sensor (14C718).
4. Remove screws attaching seat back control switch to front seat cushion frame and spring.
5. Disconnect front seat back pad adjusting hose (65528) from seat back control switch.
6. Disconnect switch connector from wire harness.

REMOVAL AND INSTALLATION (Continued)

Installation

1. NOTE: When the battery (10655) has been disconnected and reconnected, some abnormal drive symptoms may occur while the powertrain control module (PCM)(12A650) relearns its adaptive strategy. The vehicle may need to be driven 16 km (10 miles) or more to relearn the strategy.

   Follow removal procedure in reverse order.

Switch, Seat Control, Seat Regulator

Removal

1. Disconnect battery ground cable (14301).
2. Remove two screws retaining seat cushion side shield and remove shield.
3. Remove two screws retaining seat regulator control switch (14A701).
4. Remove seat regulator control switch.
5. Disconnect electrical connector.

Installation

1. NOTE: When the battery (10655) has been disconnected and reconnected, some abnormal drive symptoms may occur while the powertrain control module (PCM)(12A650) relearns its adaptive strategy. The vehicle may need to be driven 16 km (10 miles) or more to relearn the strategy.

   Follow removal procedure in reverse order.

Latch, Bench Seat

Removal

1. Remove attaching screws and front seat back cover (64416) from lower side of front seat back frame (61018) (both sides).
2. Remove two bolts attaching latch to front seat back frame.
3. Remove seat latch.

Installation

1. Follow removal procedure in reverse order. Springs (one each side) must rest against the bottom of the front seat back frame and hook over the pawls on each end of the latch.
2. Tighten upper bolt to 30-40 N·m (22-30 lb-ft) and the lower bolt to 27-43 N·m (20-32 lb-ft).

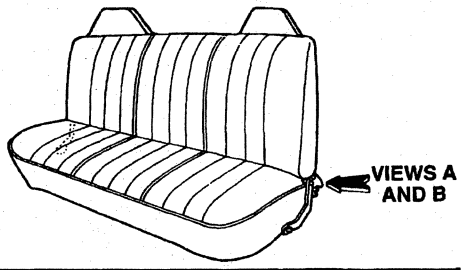

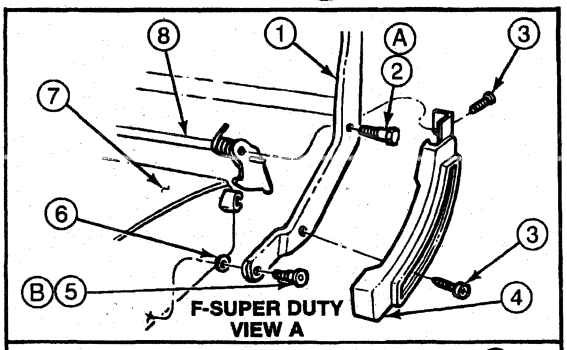

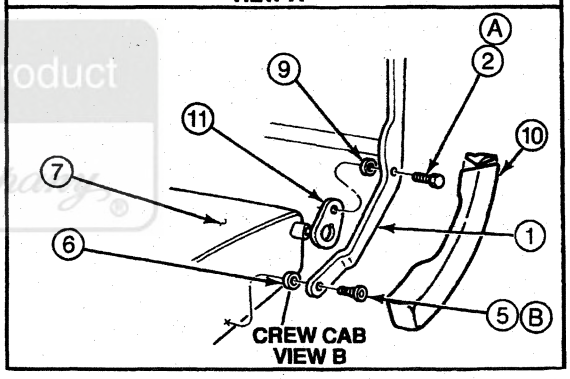

DR0228-A

Item	Part Number	Description
1	64810	Front Seat Back
2	388887-S58	Bolt
3	N610017-S2	Screw(s)
4	62768	Front Seat Back Latch Lower Cover
5	385329-S58	Bolt
6	385208-S100	Washer
7	63100	Front Seat Cushion Frame and Spring
8	62648	Front Seat Back Latch
9	386369-S	Spacer
10	3561684	Cover, Front Seat Back Pivot Side
11	617C04	Front Seat Back Pivot Lockout
A	—	Tighten to 30-40 N·m (22-30 Lb-Ft)
B	—	Tighten to 27-43 N·m (20-32 Lb-Ft)

Official Licensed Product Ford Motor Company

REMOVAL AND INSTALLATION (Continued)

Latch, Front

Removal

1. Remove two screws securing front seat back latch lower cover (62768) to latch assembly. Pull front seat back latch lower cover free from seat assembly at opposite end.
2. Remove two bolts securing front seat back latch (62648) to seat. Remove latch.

Installation

1. Position front seat back latch to seat and secure with two bolts.
2. Install front seat back latch lower cover to seat assembly. Install two screws securing front seat back latch lower cover to latch assembly.

RIGHT SIDE SHOWN
LEFT SIDE TYPICAL

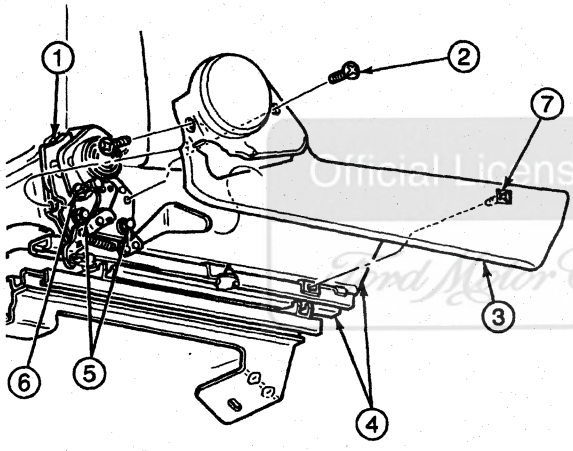

R6480-D

Item	Part Number	Description
1	62648	Front Seat Back Latch
2	51764-S58	Screw (2 Req'd)
3	62768	Front Seat Back Latch Lower Cover
4	63100	Front Seat Cushion Frame and Spring
5	—	Bolt and Washer (Part of 62648)
6	62638	Front Seat Back Latch Striker
7	—	Screw (Part of 18617D00)

Latch, Split Back Bench Seat

Removal

1. Remove seat from vehicle by removing nuts attaching front seat tracks (61704) to front floor pan (11135).
2. Remove attaching screws and front seat back latch lower cover (62768) from front seat back (64810).
3. Remove back trim to gain access to latch mechanism.
4. Remove seat back-to-cushion attaching bolt and washer.
5. Remove two screws and bundling strap connecting the lever to latch pawl.
6. Unhook rod from lever and pawl.
7. Cut and remove the pawl pivot pin.
8. Disconnect spring from front seat back frame (61018).

Installation

1. Insert a new pivot pin through holes in seat back and pawl.
2. Flatten end of pivot pin to retain pin into front seat back frame.
3. Hook end of spring onto front seat back frame.
4. Insert end of latch rod through hole in pawl.
5. Push latch rod attachment screws through holes in attaching tabs on rod.
6. Install to front seat back frame.
7. Insert ends of rod into proper holes in the lever and pawl.
8. Install untrimmed front seat back frame to cushion and adjust gap between pawl and striker by rotating center portion of the rod assembly.

   The gap between the pawl and striker must be 1.27-1.77 mm (0.05-0.07 inch).
9. Remove front seat back frame from cushion and retrim.
10. Install trimmed seat back to cushion by inserting attaching bolt through hole at end of the arm sticking out of the trimmed back.
11. Slide washer over the end of the bolt, slide back onto inboard pivot pin and drive attachment bolt. Tighten bolt to 25-43 N·m (18-32 lb-ft). Recheck gap and adjust if necessary.
12. Install seat into vehicle. Tighten nuts attaching front seat tracks to front floor pan to 34-46 N·m (25-34 lb-ft).
13. Position trim cover and install two screws.

Official Licensed Product Ford Motor Company

REMOVAL AND INSTALLATION (Continued)

14. Adjust cable assembly, if required, to produce the 2.5-mm (0.10-inch) gap between the front seat back latch pawl and the front seat back latch striker (62638).

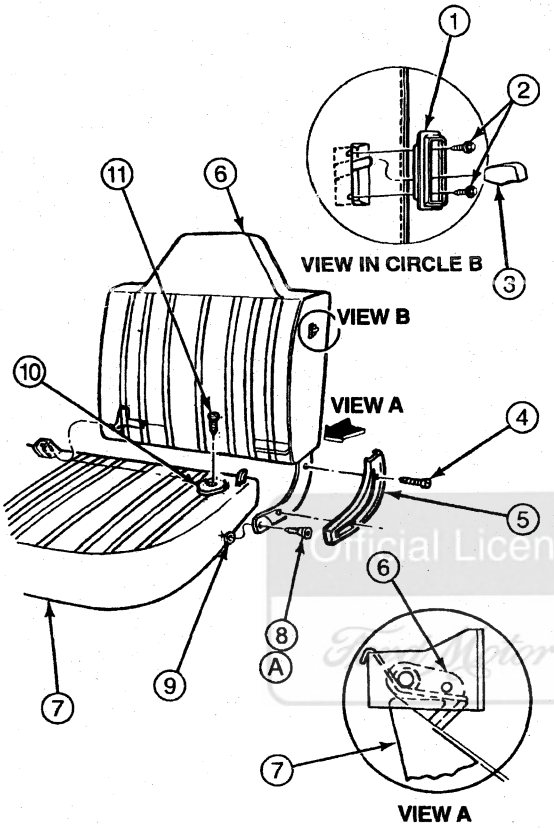

R1903-L

Item	Part Number	Description
1	62672	Front Seat Back Latch Handle Bezel
2	56902-S2	Screw
3	62622	Adjuster Handle
4	N801081-S58	Screw (2 Req'd)
5	61634	Front Seat Back Pivot Side Cover
6	64810	Front Seat Back
7	63100	Front Seat Cushion Frame and Spring
8	385329-S58	Bolt
9	385208-S100	Washer
10	386650-S	Bumper
11	56902-S58	Screw
A	—	Tighten to 25-43 N·m (18-32 Lb-Ft)

Latch, Rear Seat

Removal

1. NOTE: On the Crew Cab, make sure that springs (one each side) rest against the bottom of the seat back and are hooked over the pawls on each end of the latch.

   Remove latch-to-seat back attaching bolts or screws.

Installation

1. Follow removal procedure in reverse order.
2. On Crew Cab, tighten upper latch assembly bolt to 25-43 N·m (18-32 lb-ft) and cushion-to-latch assembly to 24-36 N·m (18-27 lb-ft).

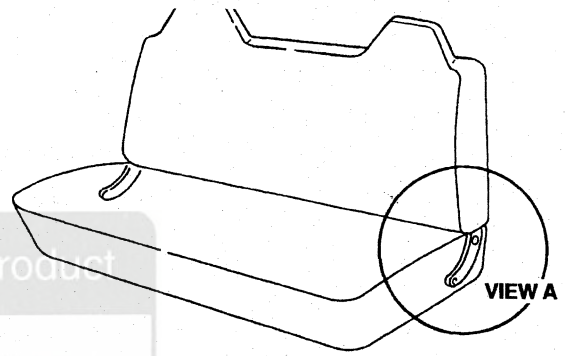

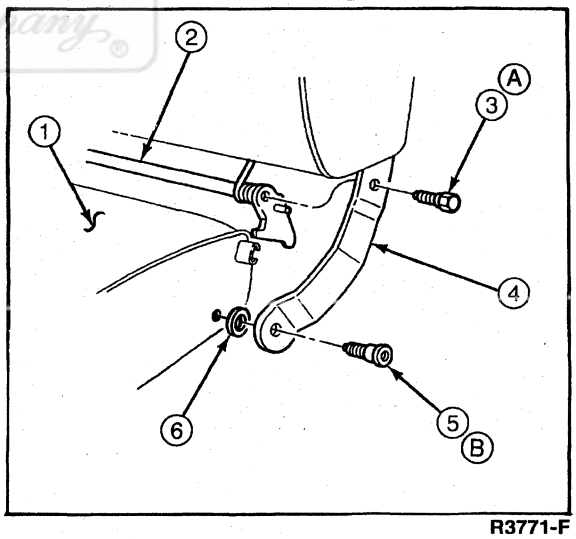

R3771-F

Item	Part Number	Description
1	63160	Rear Seat Cushion Frame
2	61382	Rear Seat Back Release Latch
3	38887-S2	Bolt
4	613A38	Rear Seat Back Frame
5	391132-S2	Bolt
6	N801527-S2	Washer

(Continued)

REMOVAL AND INSTALLATION (Continued)

Item	Part Number	Description
A	—	Tighten to 25-43 N·m (18-32 Lb-Ft)
B	—	Tighten to 24-36 N·m (18-27 Lb-Ft)

Latch Striker, Front Seat Back

Removal

1. Position front seat back (64810) forward.
2. Untrim rear corner of front seat cushion pad (632A22).
3. Remove two attaching bolts and front seat back latch striker (62638) from front seat back frame (61018).

Installation

1. Install two attaching bolts and tighten to 17-27 N·m (13-20 lb-ft).
2. Retrim rear corner of front seat cushion pad.
3. Adjust gap between pawl and front seat back latch striker by reaching up inside trimmed front seat back frame and rotating latch rod adjustment until gap is 1.27-1.77 mm (0.05-0.07 inch).

Pump, Front Seat Back Pad Adjusting

Removal

1. Remove seat support bolt insulator and seat assembly from vehicle.
2. Remove front seat tracks (61704) from front seat cushion frame and spring (63100).
3. Remove front seat cushion cover (62900) as necessary to gain access to front seat back pad adjusting pump screws.
4. Remove mounting screws, disconnect front seat back pad adjusting hose (65528) and electrical connector and remove front seat back pad adjusting pump (65530).

Installation

1. Follow removal procedure in reverse order.

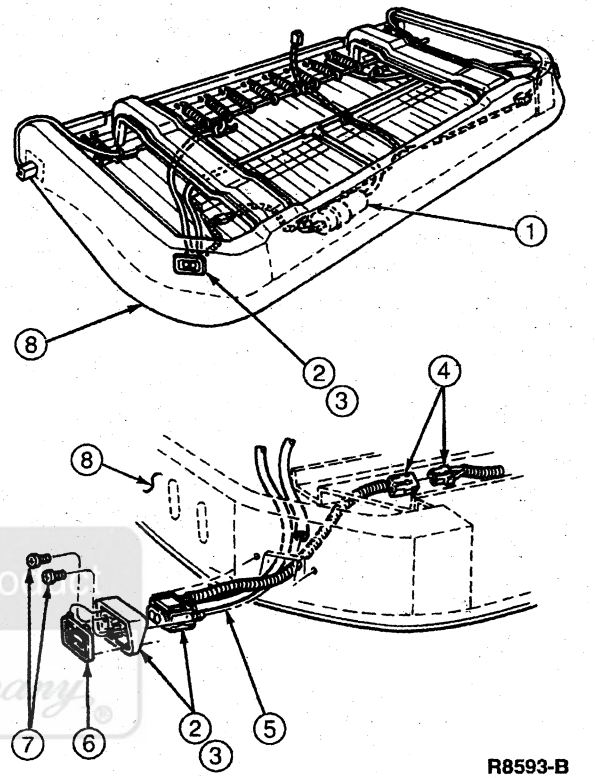

R8593-B

Item	Part Number	Description
1	65530	Front Seat Back Pad Adjusting Pump
2	14B722	Seat Back Control Switch (RH)
3	14C723	Seat Back Control Switch (LH)
4	—	Electrical Switch Connector (Part of 14401)
5	65528	Front Seat Back Pad Adjusting Hose
6	14C713	Seat Back Control Switch Bezel
7	N610130-S58	Screw(s) (2 Req'd)
8	63100	Front Seat Cushion Frame and Spring

Licensed Product Ford Motor Company

SPECIFICATIONS

LUBRICANT/ADHESIVE/CLEANER SPECIFICATIONS

Description	Part Number	Ford Specification
Caulking Cord	D6AZ-19560-A	ESB-M4G32-A
Multi-Purpose Grease	DOAZ-19584-AA	ESR-M1C159-A and ESB-M1C93-A

TORQUE SPECIFICATIONS

Description	N·m	Lb-Ft
Front Seat Track Assembly-to-Front Floorpan Nut(s)	47-63	35-46
Front Seat-to-Front Seat Frame, 40/20/40	18-27	13-20
Front Seat Track Assembly Screw(s)/Washer(s), 40/20/40	47-63	35-46
Captain Chair Support-to-Floorpan Screw(s)/Washer(s)	47-63	35-46
Rear Seat Cushion Bracket-to-Cushion Frame Screw(s)	16-24	12-18
Front Bench Seat Track-to-Cushion Screw(s)	18-27	13-20
Bench Seat Back-to-Latch Screw(s), Upper	30-40	22-30
Bench Seat Back-to-Latch Screw(s), Lower	27-43	20-32

(Continued)

TORQUE SPECIFICATIONS (Cont'd)

Description	N·m	Lb-Ft
Cushion Assembly-to-Latch Screw(s)	25-43	18-32
Striker Bolts(s)	17-27	13-20
Bench Seat Track-to-Floorpan Screws (Crew Cab)	34-46	25-34
Track-to-Cushion Screws (Crew Cab)	17-27	13-20
Front Seat Tracks-to-Floorpan Nut(s), Split Back Bench	34-46	25-34
Rear Seat-to-Floor Panel Screw and Washer Assembly	25-44	18-32
Side Folding Seat Nut(s)	30-40	22-30
Rear Seat Latch-to-Seat Back Bolts, Upper	25-43	18-32
Rear Seat Latch-to-Seat Back Bolts, Lower	24-36	18-27

SPECIAL SERVICE TOOLS/EQUIPMENT

ROTUNDA EQUIPMENT

Model	Description
014-00407	Digital Volt-Ohmmeter

Official Licensed Publication
Ford Motor Company

SECTION 01-11 Glass, Frames and Mechanisms

SUBJECT	PAGE
VEHICLE APPLICATION	01-11-1
DIAGNOSIS AND TESTING	
Electrical Schematic Reference(s)	01-11-1
Power Windows	01-11-1
Component Tests	01-11-6
Switch Test, Window	01-11-6
Inspection and Verification	01-11-1
Pinpoint Tests	01-11-2
Symptom Chart	01-11-1
REMOVAL AND INSTALLATION	
Back Window Glass, Fixed	01-11-17
Back Window Glass, Opening	01-11-18
Division Bar	01-11-23
Door Glass Run Retainer, Front	01-11-22
Door Glass Run Retainer, Rear	01-11-23
Door Glass Top Run, Front	01-11-23
Door Glass Top Run, Rear	01-11-24
Door Window Glass, Front	01-11-6
Door Window Glass, Rear	01-11-9
Latch, Opening Back Window Glass	01-11-26
Weatherstrip, Door Glass Belt	01-11-19

SUBJECT	PAGE
REMOVAL AND INSTALLATION (Cont'd.)	
Weatherstrip, Opening Back Window Glass	01-11-20
Window Glass, Rear Quarter	01-11-25
Window Glass, Vent	01-11-24
Window Regulator Control Switch	01-11-20
Window Regulator Electric Drive, Front Door	01-11-21
Window Regulator, Manual and Power Front and Rear Doors	01-11-12
Window, Vent Weatherstrip	01-11-24
Windshield Glass	01-11-14
Windshield Outside Moulding	01-11-17
LUBRICATION	
Glass Friction Areas	01-11-26
Window Regulators	01-11-26
ADJUSTMENTS	
Window Mechanism, Front Door	01-11-26
Window Mechanism, Rear Door	01-11-26
SPECIFICATIONS	01-11-26
SPECIAL SERVICE TOOLS/EQUIPMENT	01-11-27

Official Licensed Product
Ford Motor Company

VEHICLE APPLICATION

F-250 Heavy Duty, F-350 and F-Super Duty

DIAGNOSIS AND TESTING

Electrical Schematic Reference(s)

Refer to Electrical and Vacuum Troubleshooting Manual, Cell 100, Power Windows for schematic and connector information.

Power Windows

Inspection and Verification

1. Visually inspect the components of the power window system to determine if any of the following electrical or mechanical concerns apply.

VISUAL INSPECTION CHART

Mechanical	Electrical
• Window alignment	• Blown fuse: — 20 amp circuit breaker No. 14
• Window mounting (regulator and bracket)	• Damage to wiring harness
• Window frame interference	• Loose or corroded connections
	• Damaged switches

2. Check the wiring harness for obvious signs of shorts, opens, bad connections or damage.
3. If concern is not visually evident, determine the symptom.

Symptom Chart

Refer to the Electrical and Vacuum Troubleshooting Manual for the connector numbers in the pinpoint tests.

DIAGNOSIS AND TESTING (Continued)

NOTE: Use Rotunda Digital Volt-Ohmmeter 014-00407 or equivalent to perform electrical pinpoint tests.

POWER WINDOWS

Condition	Possible Source	Action
• Power Windows Completely Inoperative	• Supply open or shorted. • Ground open. • Master window / door lock control switch inoperative. • Circuits open or shorted. • Window regulator electric drive inoperative.	• GO to Pinpoint Test A.
• Left Front Power Window Inoperative	• Master window / door lock control switch inoperative. • Circuits open or shorted. • Window regulator electric drive.	• GO to Pinpoint Test B.
• Passenger Power Window Inoperative from Both Switches	• Master window / door lock control switch. • Window regulator electric drive circuits. • Window regulator electric drive. • Window regulator control switch.	• GO to Pinpoint Test C.
• Power Window Inoperative from Passenger Switch	• Window regulator control switch. • Window regulator control switch power feed.	• GO to Pinpoint Test D.

Official Licensed Product Ford Motor Company

Pinpoint Tests

PINPOINT TEST A: POWER WINDOWS COMPLETELY INOPERATIVE

Test Step		Result ▶	Action to Take
A1	CHECK SUPPLY TO CIRCUIT BREAKER		
	• Remove the IP fuse panel circuit breaker 14 (20A). • Measure voltage at the IP fuse panel circuit breaker 14 (20A) input terminal. • **Is the voltage greater than 10 volts?**	Yes ▶ No ▶	GO to **A2**. SERVICE circuit breaker feed circuit. RETEST system.
A2	CHECK CIRCUIT BREAKER		
	• Measure the resistance between the circuit breaker 14 (20A) terminals. • **Is the resistance less than 5 ohms?**	Yes ▶ No ▶	GO to **A3**. REPLACE circuit breaker 14 (20A). RETEST system.
A3	CHECK SUPPLY TO MASTER SWITCH		
	• With key off, disconnect the master window / door lock control switch connector C505 (without Crew Cab), C503 (Crew Cab). • Key to RUN / ACC. • Measure voltage of Circuit 400 (LB / BK) at the master window / door lock control switch connector C505 (without Crew Cab), C503 (Crew Cab). • **Is voltage greater than 10 volts?**	Yes ▶ No ▶	GO to **A4**. SERVICE Circuit 400 (LB / BK) between master window / door lock control switch and IP fuse panel. RETEST system.
A4	CHECK MASTER SWITCH GROUND		
	• Measure resistance between Circuit 57 (BK) wire between the master window / door lock control switch connector C505 (without Crew Cab), C503 (Crew Cab) and ground. • **Is resistance less than 5 ohms?**	Yes ▶ No ▶	REPLACE master window / door lock control switch. RESTORE vehicle. RETEST system. SERVICE Circuit 57 (BK). RETEST system.

DIAGNOSIS AND TESTING (Continued)

PINPOINT TEST B: LEFT FRONT POWER WINDOW INOPERATIVE

Test Step		Result	Action to Take
B1	CHECK WINDOW POWER SUPPLY		
	• Access the master window / door lock control switch per outline. • Key to RUN / ACC. • Measure the voltage at the following pins while actuating the window regulator control switch.	Yes ▶ No ▶	GO to **B2.** REPLACE master window / door lock control switch. RESTORE vehicle. RETEST system.
	• **Is voltage greater than 10 volts?**		
B2	CHECK WINDOW MOTOR CIRCUIT		
	• Gain access to inoperative window regulator electric drive connector C500 as outlined. • Disconnect window regulator electric drive connector C500. • Measure the voltage at the following pins while actuating the window regulator control switch.	Yes ▶ No ▶	REPLACE left front window electric drive. RESTORE vehicle. RETEST system. SERVICE open circuit. RETEST system.
	• **Is voltage greater than 10 volts?**		

CREW CAB ONLY

Pin	Circuit	Circuit Function
6	*226 (W / BK)	Left Front Window Up
	**227 (Y)	Left Front Window Down
8	*227 (Y)	Left Front Window Down
	**226 (W / BK)	Left Front Window Up

* Without Keyless Entry
** With Keyless Entry

EXCEPT CREW CAB

Pin	Circuit	Circuit Function
15	226 (W / BK)	Left Front Window Up
8	227 (Y)	Left Front Window Down

CREW CAB ONLY

Circuit	Circuit Function
*226 (W / BK)	Left Front Window Up
**227 (Y)	Left Front Widow Down
*227 (Y)	Left Front Window Down
**226 (W / BK)	Left Front Window Up

* Without Keyless Entry
** With Keyless Entry

EXCEPT CREW CAB

Circuit	Circuit Function
227 (Y)	Left Front Window Down
226 (W / BK)	Left Front Widow Up

Unlicensed Product Chrysler Company

DIAGNOSIS AND TESTING (Continued)

PINPOINT TEST C: PASSENGER POWER WINDOW INOPERATIVE FROM BOTH SWITCHES

Test Step	Result ▶	Action to Take
C1 CHECK MASTER SWITCH OUTPUT ● Access the master window / door lock control switch per outline. ● Using test lamp, connect to known good ground. ● Key to RUN / ACC. ● Actuate inoperative window regulator control switch with test lamp connected to appropriate circuit.	Yes ▶ No ▶	GO to **C2**. REPLACE master window / door lock control switch. RESTORE vehicle. RETEST system.
C2 CHECK PASSENGER SWITCH INPUT ● Access the inoperative window regulator control switch per outline. ● Using test lamp, connect lead to known good ground. ● With test lamp connected to appropriate circuit on inoperative window regulator control switch, actuate master window / door lock control switch for inoperative window.	Yes ▶ No ▶	GO to **C3**. SERVICE open circuit. RETEST vehicle.

EXCEPT CREW CAB

Pin	Circuit	Circuit Function
13	314 (T/LB)	Right Front Window Down
6	313 (W/Y)	Right Front Window Up

CREW CAB ONLY

Pin	Circuit	Circuit Function
7	*314 (T/LB)	Right Front Window Down
	**313 (W/Y)	Right Front Window Up
9	*313 (W/Y)	Right Front Window Up
	**314 (T/LB)	Right Front Window Down
10	317 (GY/O)	Left Rear Window Up
12	316 (Y/LB)	Left Rear Window Down
11	320 (R/BK)	Right Rear Window Up
13	319 (Y/BK)	Right Rear Window Down

* Without Keyless Entry
** With Keyless Entry

● **Did test lamp illuminate?**

Licensed Product
Ford Motor Company

DIAGNOSIS AND TESTING (Continued)

PINPOINT TEST C: PASSENGER POWER WINDOW INOPERATIVE FROM BOTH SWITCHES (Continued)

Test Step		Result ▶	Action to Take
C3	CHECK PASSENGER SWITCH OUTPUT		
	• With test lamp connected to appropriate circuit on inoperative window regulator control switch, actuate inoperative window regulator control switch.	Yes ▶	GO to **C4**.
		No ▶	REPLACE inoperative window regulator control switch. RESTORE vehicle. RETEST vehicle.

Circuit	Circuit Function
334 (R/Y)	Right Front Window Down
333 (Y/R)	Right Front Window Up
334 (R/Y)	Left Rear Window Down
333 (Y/R)	Left Rear Window Up
334 (R/Y)	Right Rear Window Down
333 (Y/R)	Right Rear Window Up

• **Did test lamp illuminate?**

C4	CHECK ELECTRIC DRIVE CIRCUITS		
	• Gain access to inoperative window regulator electric drive connector per outline. • Disconnect window regulator electric drive connector. • With test lamp connected to appropriate circuit at electric drive connector, actuate inoperative window regulator control switch.	Yes ▶	REPLACE inoperative window electric drive. RESTORE vehicle. RETEST system.
		No ▶	SERVICE open circuit. RETEST system.

Circuit	Circuit Function
334 (R/Y)	Right Front Window Down
333 (Y/R)	Right Front Window Up
334 (R/Y)	Left Rear Window Down
333 (Y/R)	Left Rear Window Up
334 (R/Y)	Right Rear Window Down
333 (Y/R)	Right Rear Window Up

• **Did test lamp illuminate?**

Ford Licensed Product Motor Company

PINPOINT TEST D: POWER WINDOW INOPERATIVE FROM PASSENGER SWITCH

Test Step		Result ▶	Action to Take
D1	IDENTIFY VEHICLE		
	• **Is the vehicle a crew cab?**	Yes ▶	GO to **D3**.
		No ▶	GO to **D2**.
D2	CHECK POWER TO PASSENGER SWITCH, EXCEPT CREW CAB		
	• Access right front passenger window regulator control switch. • Key in RUN/ACC. • Measure the voltage at Pin 8 of the window regulator control switch connector C603. • **Is voltage greater than 10 volts?**	Yes ▶	REPLACE passenger window regulator control switch. RESTORE vehicle. RETEST system.
		No ▶	SERVICE open Circuit 400 (LB/BK). RETEST system.
D3	CHECK POWER TO PASSENGER SWITCH, CREW CAB		
	• Access the suspect passenger window regulator control switch. • Key in RUN/ACC. • Measure the voltage at: Pin 8 — right front switch and Pin 3 — right/left rear switch • **Is voltage greater than 10 volts?**	Yes ▶	REPLACE passenger window regulator control switch. RESTORE vehicle. RETEST system.
		No ▶	SERVICE open Circuit 400 (LB/BK) — right front window regulator control switch or Circuit 170 (R/LB) — right/left rear window regulator control switch. RETEST system.

DIAGNOSIS AND TESTING (Continued)

Component Tests

Switch Test, Window

MASTER WINDOW CONTROL SWITCH

To Test	Connect Self Powered Test Light or Ohmmeter to Terminals	Move Switch to These Positions	A Good Switch Will Indicate
Power and Ground Checks Before Any Other Tests	15,400 (LB/BK) and 14, 57 (BK)	All Four Window Switches (All Positions)	Open Circuit
	14, 57 (BK) and 8, 6, 7, 9, 10, 12, 11, 13	All Four Window Switches (at Rest)	Closed Circuit
Left Front Window Circuit	15,400 (LB/BK) and 8,226 (W/BK)	Up	Closed Circuit
	15,400 (LB/BK) and 6,227 (Y)	Down	Closed Circuit
Right Front Window Circuit	15,400 (LB/BK) and 7,313 (W/Y)	Up	Closed Circuit
	15,400 (LB/BK) and 9,314 (T/LB)	Down	Closed Circuit
Left Rear Window Circuit	15,400 (LB/BK) and 10,317 (GY/O)	Up	Closed Circuit
	15,400 (LB/BK) and 12,316 (Y/LB)	Down	Closed Circuit
Right Rear Window Circuit	15,400 (LB/BK) and 11,320 (R/BK)	Up	Closed Circuit
	15,400 (LB/BK) and 13,319 (Y/BK)	Down	Closed Circuit
Window Lock Switch	15,400 (LB/BK) and 16,170 (R/LB)	Window Lock Switch Towards Door	Open Circuit
		Window Lock Switch Away from Door	Open Circuit

Official Licensed Product
Ford Motor Company

REMOVAL AND INSTALLATION

Door Window Glass, Front

WARNING: ALWAYS WEAR SAFETY GLASSES AND GLOVES WHEN HANDLING GLASS TO AVOID PERSONAL INJURY.

Removal

1. Remove the front door trim panel (23942) and front door trim shield (237A04). Refer to Section 01-05.
2. Remove screw from the front door vent window division bar.
3. Remove two screws attaching front door vent window weatherstrip retainer to the front edge of the front door (20124).
4. Lower the front door window glass and remove the inside and outside front door belt line weatherstrips.

REMOVAL AND INSTALLATION (Continued)

Front Door Window Assemblies

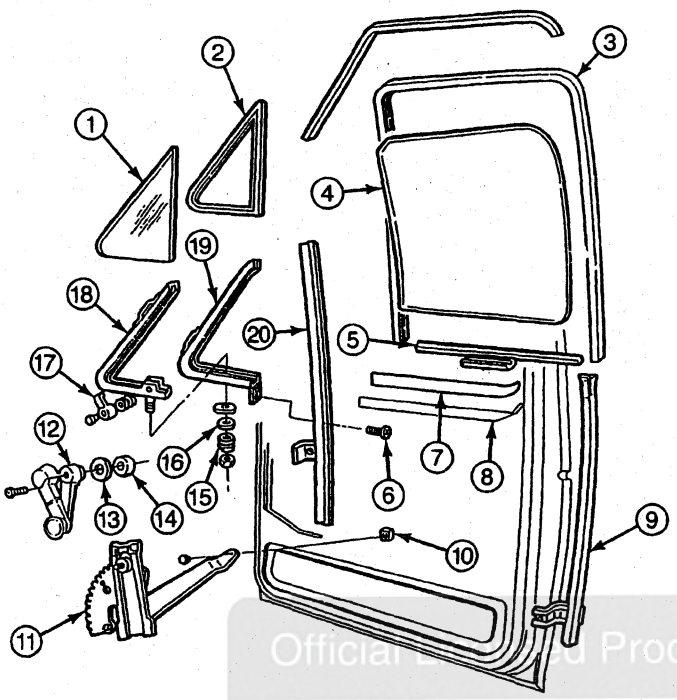

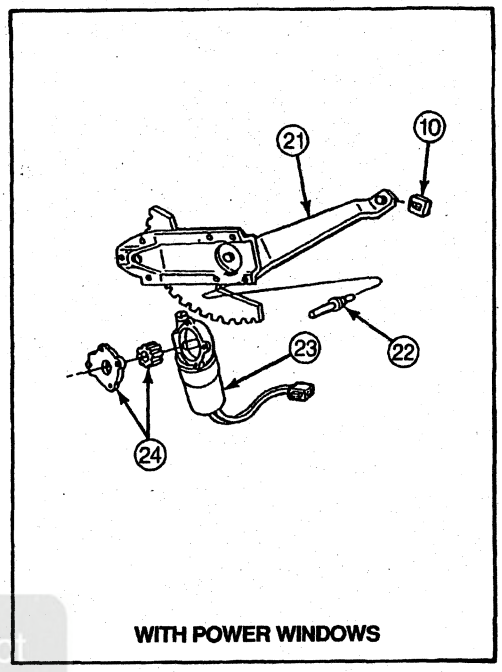

WITH POWER WINDOWS

N12550-A

Official Licensed Product
Ford Motor Company

Item	Part Number	Description
1	21402	Front Door Vent Window
2	21448	Weatherstrip, Front Door Vent Window
3	21596	Front Door Glass Top Run
4	21410	Front Door Window Glass
5	21458	Front Door Glass Channel and Retainer
6	351909-S	Screw, Front Door Vent Window Frame-to-Front Door Vent Window Division Bar
7	21452	Front Door Belt Line Outside Weatherstrip
8	21456	Front Door Belt Line Inside Weatherstrip
9	22A00	Front Door Glass Run Latch Side Retainer
10	23240	Window Regulator Arm Roller
11	23200	Front Door Window Regulator
12	23342	Window Regulator Handle

(Continued)

Item	Part Number	Description
13	23370	Window Regulator Handle Plate
14	23227	Window Regulator Handle Seal
15	22926	Pivot Spring, Front Door Vent Window
16	22963	Pivot Washer, Front Door Vent Window
17	22916	Front Door Vent Window Handle
18	21608	Frame, Front Door Vent Window
19	21408	Weatherstrip Retainer, Front Door Vent Window
20	22296	Division Bar, Front Door Vent Window
21	23208	Front Door Power Window Regulator Minus Motor
22	385189-S	Rivet
23	23394	Window Regulator Electric Drive
24	234A24	Window Regulator Drive Gear Kit

REMOVAL AND INSTALLATION (Continued)

5. Pull the front door glass top run (21596) out of the front door window opening near the front door vent window division bar enough to allow removal of the front door vent window glass and frame assembly.
6. Tilt the front door vent window glass and frame assembly and front door vent window division bar toward the rear of the front door and remove the front door vent window glass and frame assembly from the front door.
7. Remove the window regulator arm roller from the front door glass channel and retainer.
8. Rotate the front edge of the front door window glass downward and lift it and the attached front door glass channel and retainer from the front door.

Installation

1. Position the front door window glass (21410) and front door glass channel and retainer assembly into the front door.
2. Insert the window regulator arm roller into the front door glass channel and retainer (21458).
3. Position the front door vent window and frame assembly into the front door and tilt the front door vent window division bar upright.
4. Insert the front edge of the front door window glass into the front door vent window division bar.
5. Seat the front door window channel seal into the front door window opening.
6. Install the inside and outside front door belt line weatherstrips into the front door window opening.
7. Install the two front door vent window frame-to-front door screws.
8. Install the front door vent window frame-to-front door vent window division bar screw.
9. Install the front door trim panel. Refer to Section 01-05.

Door Window Glass, Front

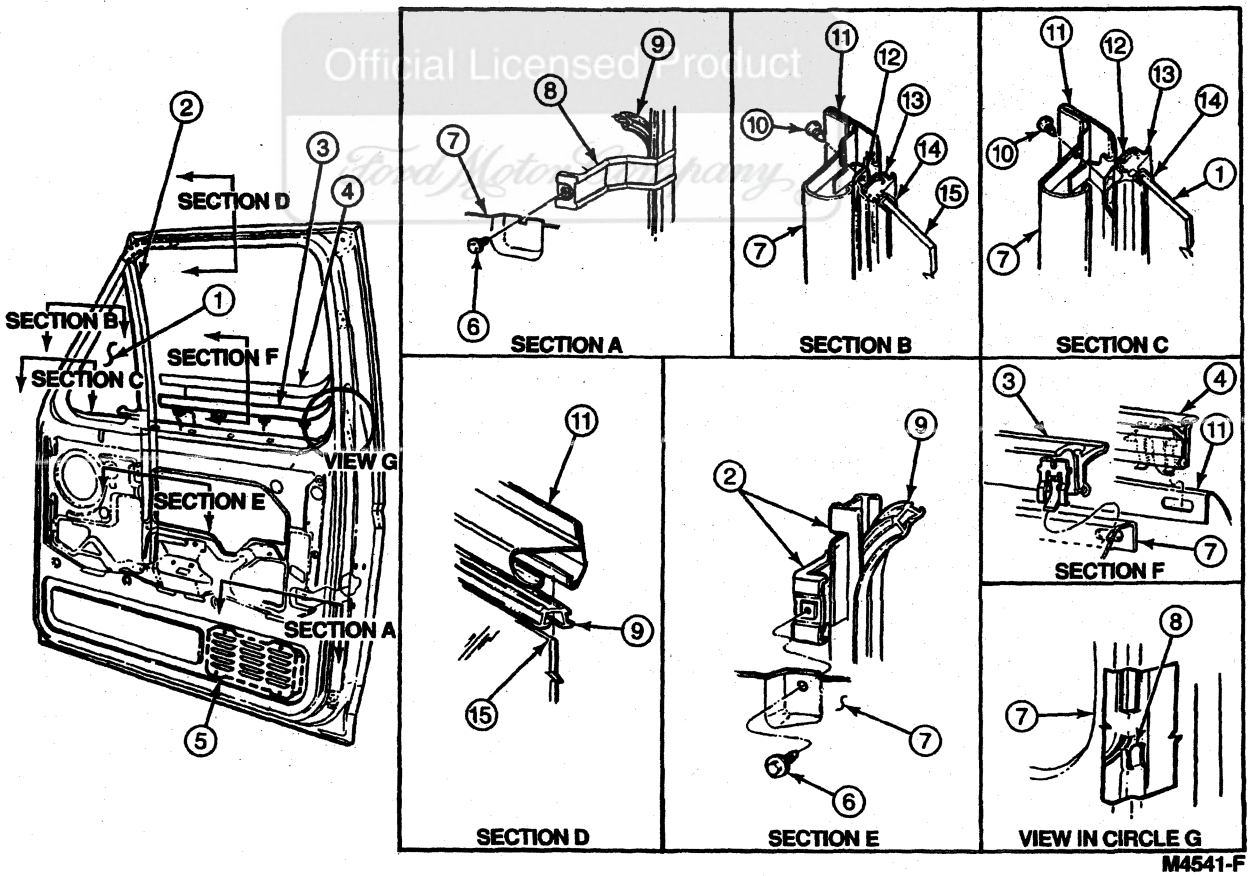

Official Licensed Product
Ford Motor Company

REMOVAL AND INSTALLATION (Continued)

Item	Part Number	Description
1	21402	Front Door Vent Window
2	22296	Division Bar, Front Door Vent Window
3	21456	Front Door Belt Line Inside Weatherstrip
4	21452	Front Door Belt Line Outside Weatherstrip
5	20892	Door Vent Valve Assy
6	N800510-S100	Screw, Inside Door Panel-to-Front Door Glass Run Latch Side Retainer
7	—	Inside Door Panel (Part of 20124)
8	222A00	Front Door Glass Run Latch Side Retainer

(Continued)

Item	Part Number	Description
9	21596	Front Door Glass Top Run
10	N808742-S301	Screw, Front Door Vent Window Weatherstrip Retainer-to-Front Door
11	—	Outside Door Panel (Part of 20124)
12	21408	Weatherstrip Retainer, Front Door Vent Window
13	21448	Weatherstrip, Front Door Vent Window
14	21608	Frame, Front Door Vent Window
15	21410	Front Door Window Glass

Door Window Glass, Rear

Removal

1. Remove the rear door trim panel.
2. Lower the rear door window glass and remove the inside and outside rear door glass weatherstrips.
3. NOTE: Only one screw is shown in illustration.

   Remove one screw at the top and one at the bottom of the rear door glass front lower retainer.

Official Licensed Product
Ford Motor Company

REMOVAL AND INSTALLATION (Continued)

Rear Door Window, Crew Cab

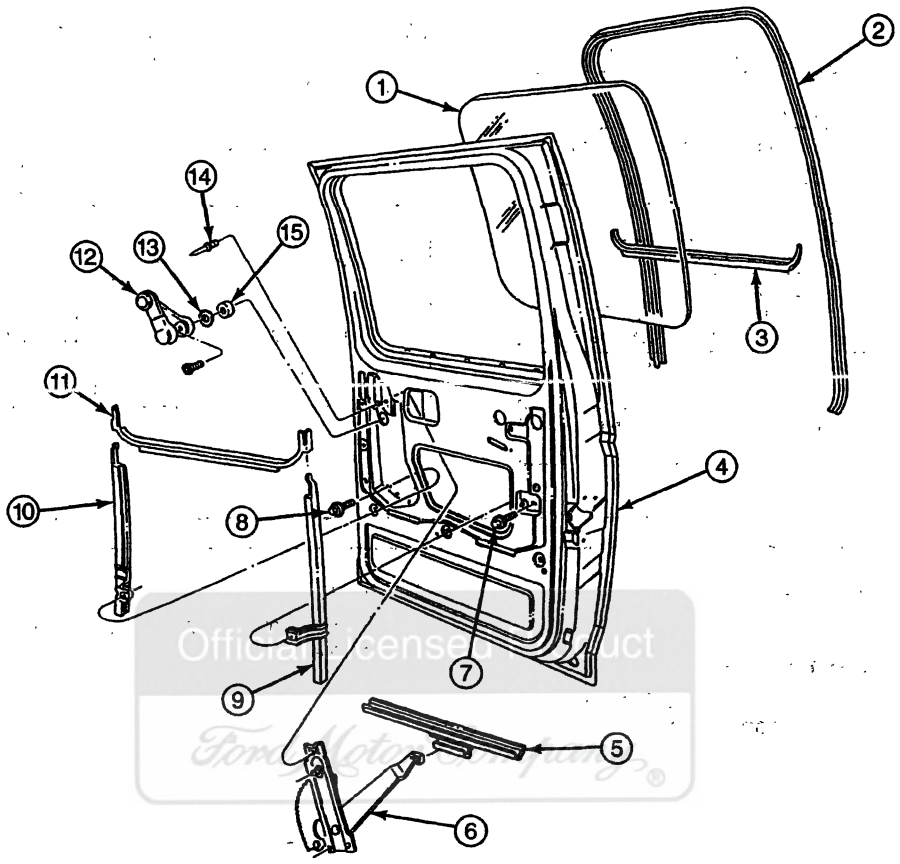

N12676-A

Item	Part Number	Description
1	25712	Rear Door Window Glass
2	25766	Rear Door Glass Run
3	25896	Rear Door Glass Outside Weatherstrip
4	24630	Rear Door
5	26228	Rear Door Window Glass Channel
6	23200	Front Door Window Regulator
7	N800510-S100	Screw, Rear Door Glass Run Rear Lower Retainer-to-Rear Door
8	N800510-S100	Screw, Rear Door Glass Run Front Lower Retainer-to-Rear Door

Item	Part Number	Description
9	25804	Rear Door Glass Run Rear Lower Retainer
10	25796	Rear Door Glass Run Front Lower Retainer
11	25860	Rear Door Glass Inside Weatherstrip
12	23342	Window Regulator Handle
13	23370	Window Regulator Handle Plate
14	385189-S100	Rivet, Window Regulator-to-Rear Door (3 Req'd)
15	23227	Window Regulator Handle Seal

(Continued)

4. Remove the rear door glass run front lower retainer by pulling up and twisting so that the retainer bracket clears the rear door window opening and the rear door glass run (25766) slides off.

5. Pull the rear door glass run out of the rear door window opening.

REMOVAL AND INSTALLATION (Continued)

6. Raise the rear door window glass (25712) half-way and remove the rear door window regulator arm from the rear door window glass channel.
7. Lift the rear door window glass up and out of the rear door window opening.

Installation

1. Position the rear door window glass into the rear door window opening.
2. Insert the rear door window regulator arm into the rear door window glass channel.
3. Install the rear door glass run into the rear door.
4. Position the rear door glass run front lower retainer in the rear door.
5. Seat the rear door glass run in the rear door glass run front lower retainer.
6. NOTE: Only one screw is shown in illustration.
   Install the two rear door glass run front lower retainer-to-rear door screws.
7. Lower the rear door glass and install the inside and outside rear door glass weatherstrips.
8. Operate the rear door window glass and check for binding or looseness. Adjust the front and rear door glass run lower retainers as necessary.
9. Install the rear door trim panel.

Rear Door Window Weatherstrips and Retainers, Crew Cab

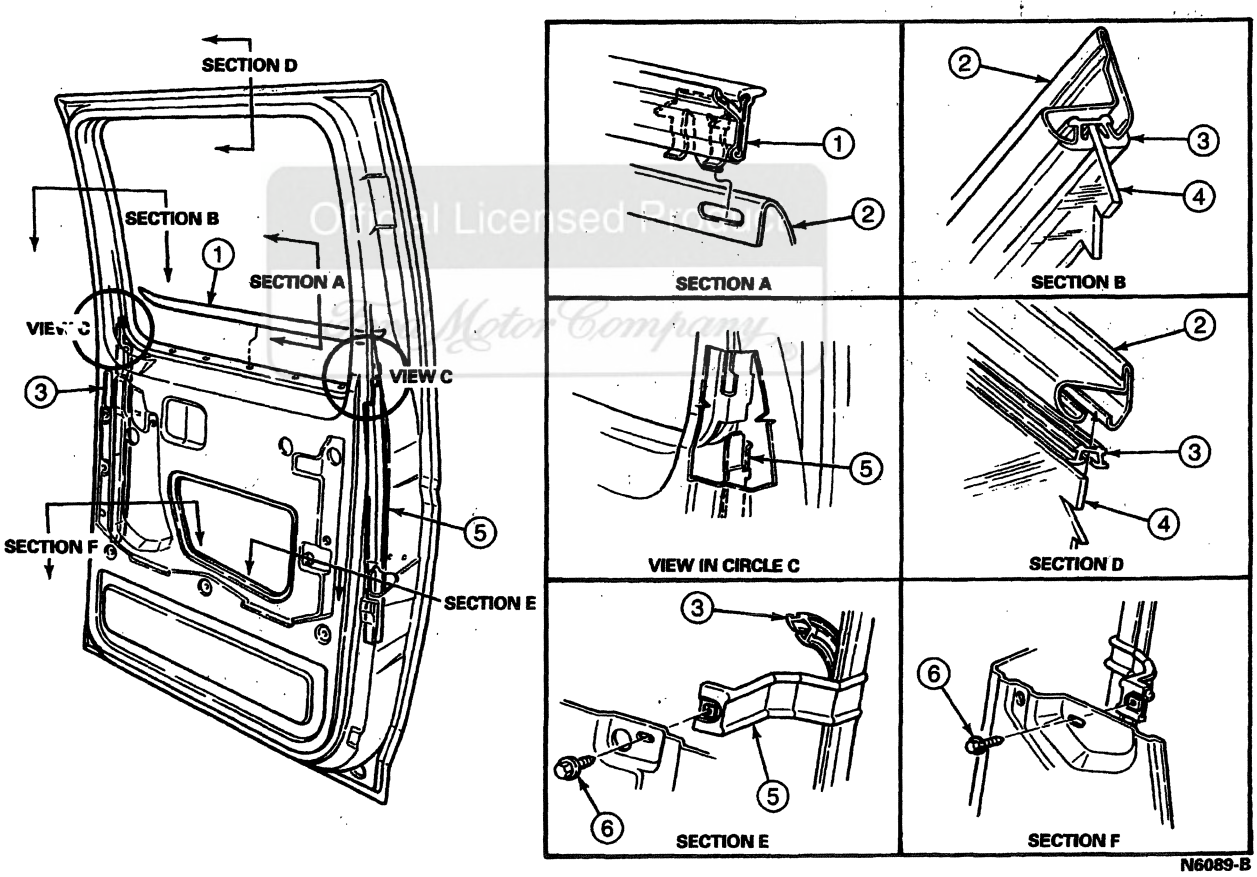

Item	Part Number	Description
1	25596	Rear Door Glass Outside Weatherstrip
2	24630	Rear Door
3	25766	Rear Door Glass Run

(Continued)

Item	Part Number	Description
4	25712	Rear Door Window Glass
5	25804	Rear Door Glass Run Rear Lower Retainer
6	N800510-S100	Screw and Washer Assy

REMOVAL AND INSTALLATION (Continued)

Window Regulator, Manual and Power Front and Rear Doors

Removal

1. Remove front door trim panel (23942) and front door trim shield (237A04), if equipped.
2. Support front door window glass in the full up position.
3. Remove center pin rivets attaching front door window regulator with drift punch.
4. NOTE: Be careful not to damage sheet metal holes during drilling.

   Drill head from each rivet using a 6.35-mm (1/4-inch) drill and remove rivet.
5. Disengage window regulator arm roller from front door glass channel and retainer (21458) and remove the front door window regulator.

Installation

1. Position the front door window regulator in front door (20124) and insert window regulator arm roller into front door glass channel and regulator.
2. Position the front door window regulator to inner front door panel and install rivets using Rotunda Blind Fastener Installation Tool 107-R0600 or equivalent to attach the front door window regulator to front door inner panel. A 1/4-20 x 1/2 inch screw and washer assembly and a 1/4 20 nut and washer assembly may be used in place of the rivets if rivets are not available (equivalent metric retainers may also be used).
3. Check operation of window mechanism and install the front door trim shield, if so equipped, and the front door trim panel.

Window Regulator, Manual

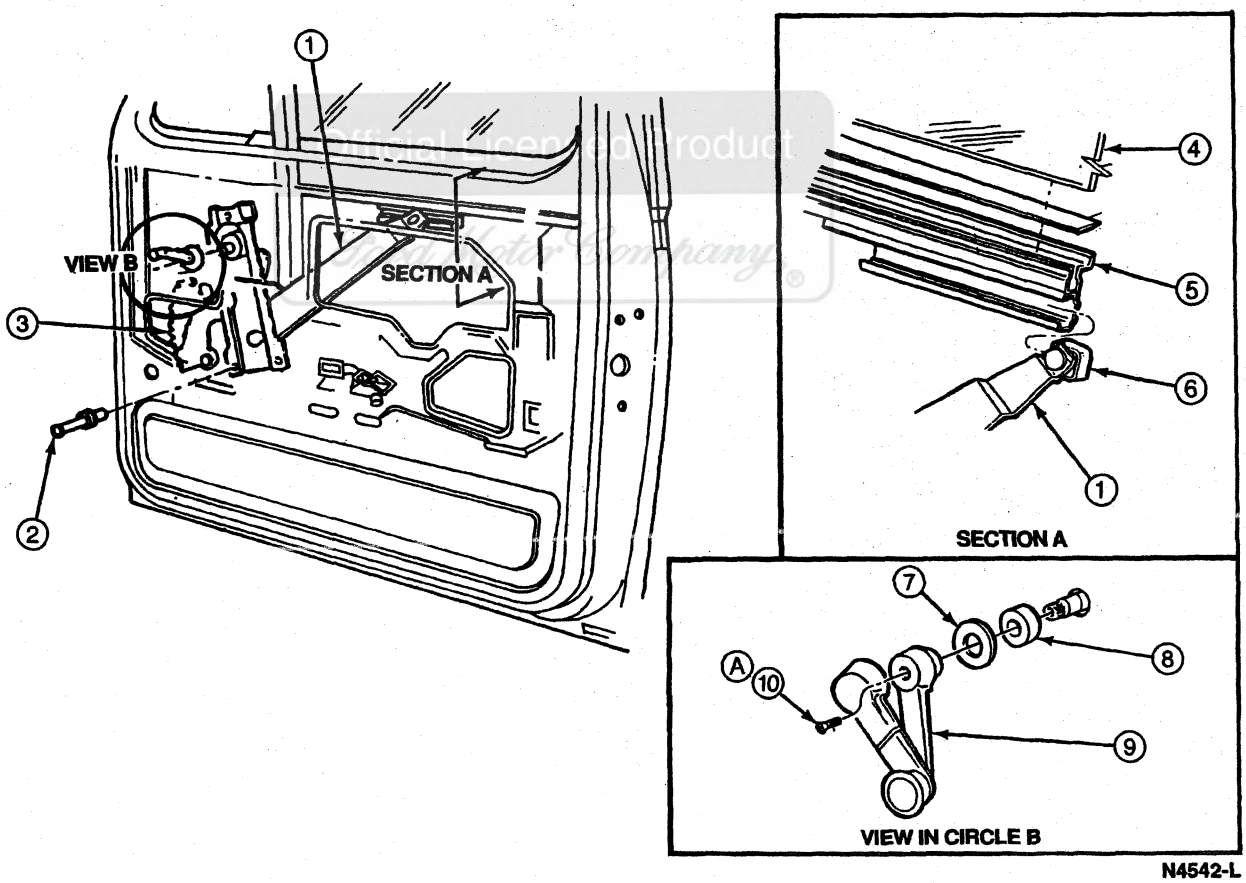

N4542-L

REMOVAL AND INSTALLATION (Continued)

Item	Part Number	Description
1	—	Front Door Window Regulator Arm (Part of 23200)
2	385189-S100	Rivet, Front Door Window Regulator-to-Front Door Inner Panel (3 Req'd)
3	23200	Front Door Window Regulator
4	21410	Front Door Window Glass
5	21458	Front Door Glass Channel and Retainer

(Continued)

Item	Part Number	Description
6	23240	Window Regulator Arm Roller
7	23370	Window Regulator Handle Plate
8	23227	Window Regulator Handle Seal
9	23342	Window Regulator Handle
10	390337-S7	Screw, Window Regulator Handle
A	—	Tighten to 4-5 N·m (35-44 Lb-In)

Rear Door Window Mechanisms, Crew Cab

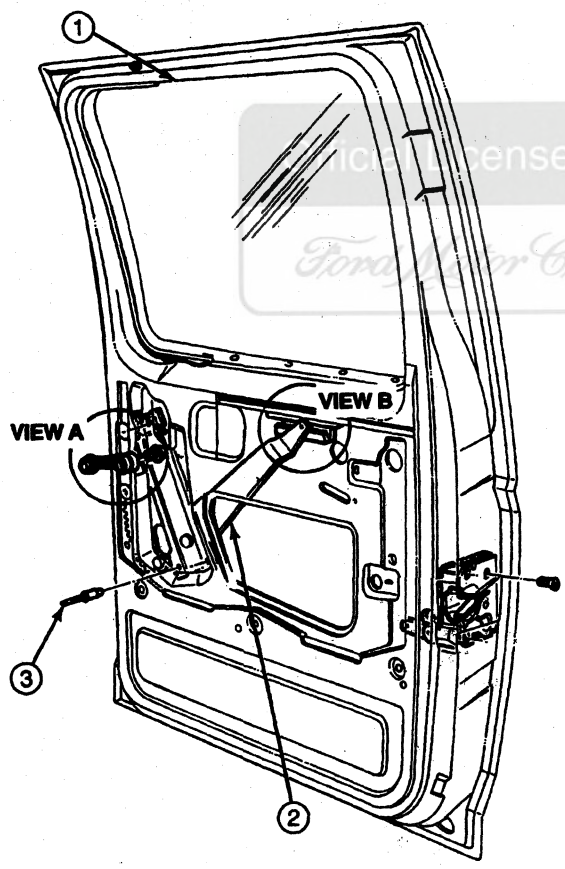

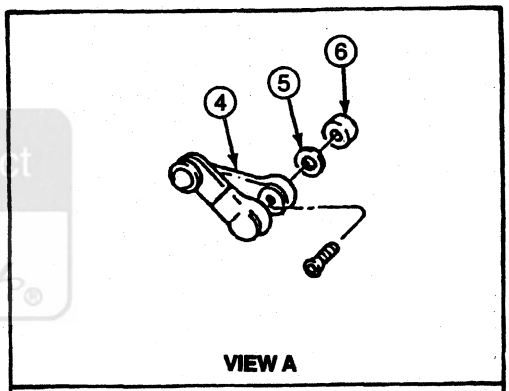

VIEW A

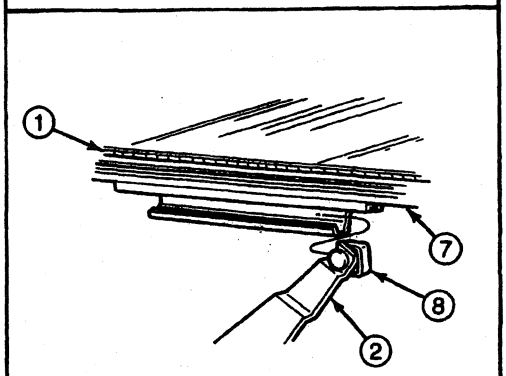

VIEW B

N5906-D

Item	Part Number	Description
1	25712	Rear Door Window Glass
2	—	Rear Door Window Regulator Arm (Part of 23200)

(Continued)

Item	Part Number	Description
3	385189-S100	Rivet, Rear Door Window Regulator-to-Rear Door Inner Panel
4	23342	Window Regulator Handle

(Continued)

REMOVAL AND INSTALLATION (Continued)

Item	Part Number	Description
5	23370	Window Regulator Handle Plate
6	23227	Window Regulator Handle Seal

Item	Part Number	Description
7	26228	Rear Door Window Glass Channel
8	23240	Window Regulator Arm Roller

(Continued)

Windshield Glass

Removal

1. Remove the windshield wiper mounting arm and pivot shafts (17566). Refer to Section 01-16.

Windshield Exterior Moulding

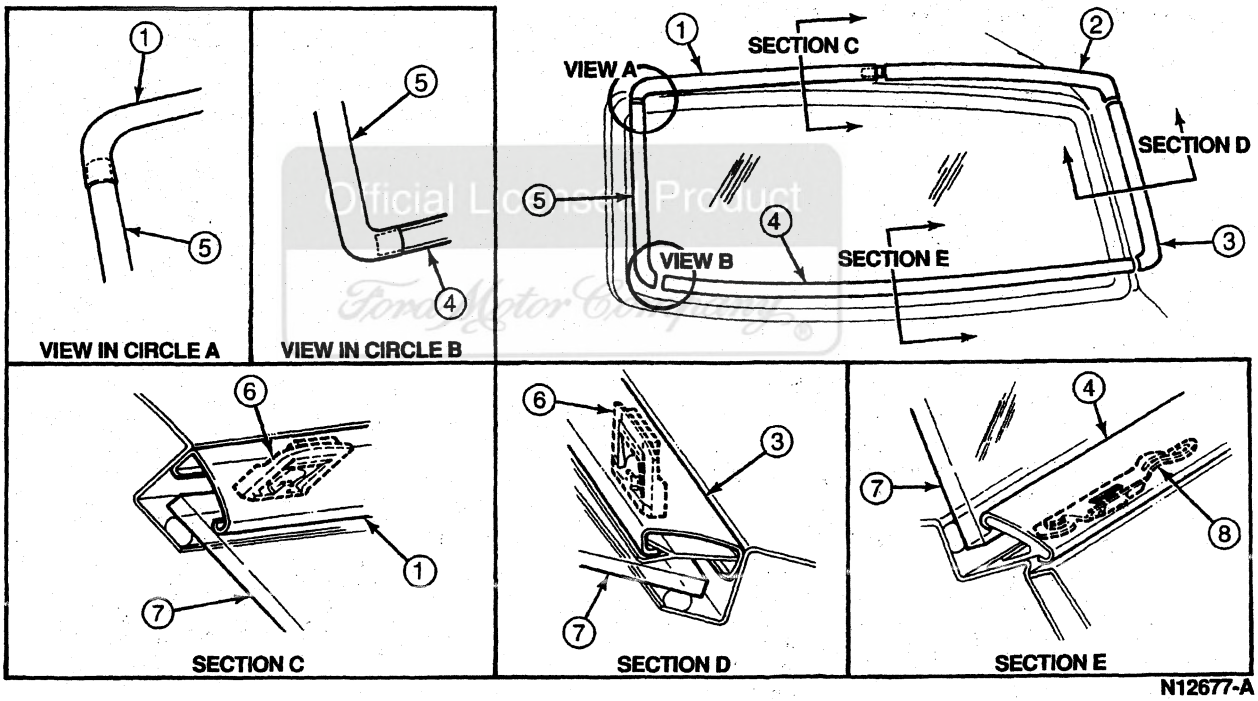

N12677-A

2. Remove all mouldings, glass stops and retainers.

Item	Part Number	Description
1	03045	Windshield Header Seal (RH Upper)
2	03137	Windshield Outside Side Moulding (LH Upper)
3	03137	Windshield Outside Side Moulding (LH)
4	03148	Windshield Outside Moulding (Lower)

Item	Part Number	Description
5	03136	Windshield Outside Side Moulding (RH)
6	42413	Clip, Reveal Moulding
7	03100	Windshield Glass
8	29100	Clip, Reveal Moulding

(Continued)

3. Remove inside rear view mirror (17700). Refer to Section 01-09.

4. Spray Equalizer Cutting Lubricant ECL-784 around windshield urethane cutting area.

REMOVAL AND INSTALLATION (Continued)

5. NOTE: On bonded, encapsulated parts, turn blade of cutting knife over so flat side is against pinch-weld. If blade is not turned over, it may cut or damage plastic encapsulation.

   Cut urethane around windshield with utility knife.

6. Insert Rotunda Interior Auto Glass Cut-Out Knife Kit 164-R2450 or equivalent into urethane at lower center of windshield and cut through the urethane sealant around the entire windshield glass (03100).

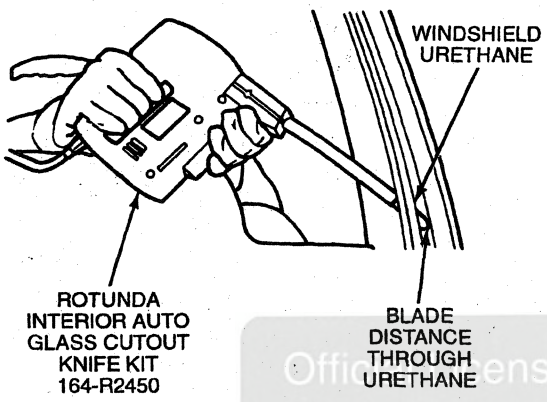

7. Remove the windshield glass with aid of an assistant.

8. NOTE: If the urethane has cured all the way through, it will be necessary to remove enough urethane to leave only a 1.5-mm (1/16-inch) thick layer on the sheet metal.

   Remove any excess urethane, using care not to smear the urethane on component parts.

9. Check flange sealing area for damaged sheet metal or foreign objects which may cause glass breakage. Repair sheet metal if necessary.

Installation

CAUTION: Use only urethane for service of air and water leaks in urethane seal.

CAUTION: When replacing urethane installed glass parts, the vehicle should not be driven until the urethane has cured. This will prevent the windshield from being jarred out of position.

CAUTION: Leave door windows down slightly and do not slam doors closed until urethane has cured.

NOTE: Installation of glass with urethane-type seal is performed using Urethane Kit EOAZ-19562-A. The kit contains tools and materials required for glass installation. Materials listed in this procedure are part of this kit.

NOTE: Repair any damage to sheet metal flange.

NOTE: If existing (fully cured) urethane remains on the windshield opening flange, the new urethane should be applied on top of the existing urethane. However, at no point should the existing urethane material exceed 2.54 mm (0.10 inch) above the sheet metal flange. If necessary, reduce the height of the existing urethane using a razor blade or utility knife.

1. Using applicator supplied with kit, apply Urethane Metal Primer WSB-M2G234-C to windshield opening flange, where bare or painted sheet metal is exposed. Allow a minimum of ten minutes for urethane metal primer surface to dry.

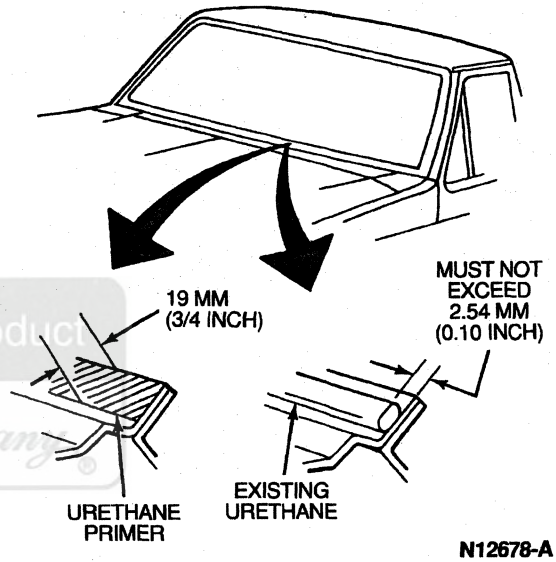

2. Install Polyvinyl Chloride (Foam Dam) Tape with self-adhesive back around window opening at end of metal flange, and at uppermost side of seal plane along cowl top outer panel (02012).

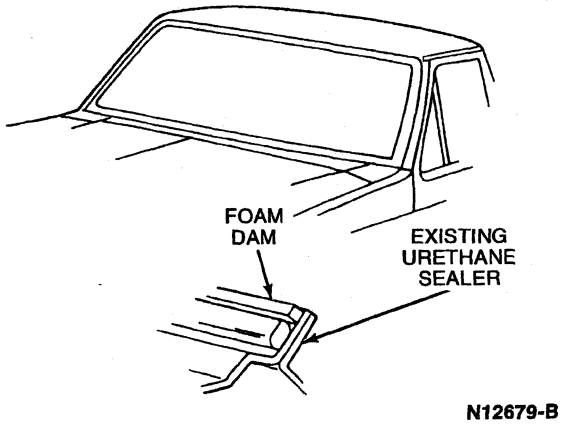

3. Place the windshield glass on a low, stable work surface, inside up.

Officially Licensed Product Ford Motor Company

REMOVAL AND INSTALLATION (Continued)

4. Clean the windshield glass and install the inside rear view mirror bracket (17698) with Rearview Mirror Adhesive D9AZ-19554-CA or equivalent meeting Ford specification ESB-M2G176-A. Refer to Section 01-09.
5. NOTE: Wipe off urethane glass cleaner immediately after application because cleaner flash-dries.

   Using applicator supplied with kit, wipe the outer 13 mm (1/2 inch) of the inside windshield glass periphery with Urethane Glass Wipe WSB-M5B280-S2. Immediately following application, before evaporation occurs, wipe off with a lint free cloth. Repeat application.

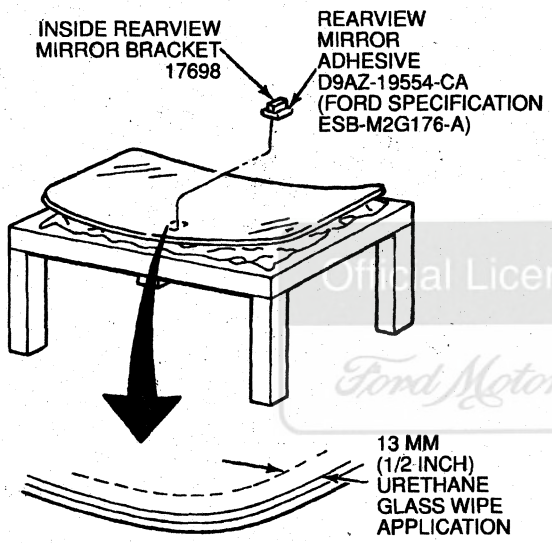

N12680-A

6. Use glass spacers to properly align windshield glass to body. Windshield glass must be centered so that the difference between the side margins is no more than 3.0 mm (0.11 inch) along the entire A pillar. Mark alignment points with masking tape or crayon on four sides of both glass and opening.

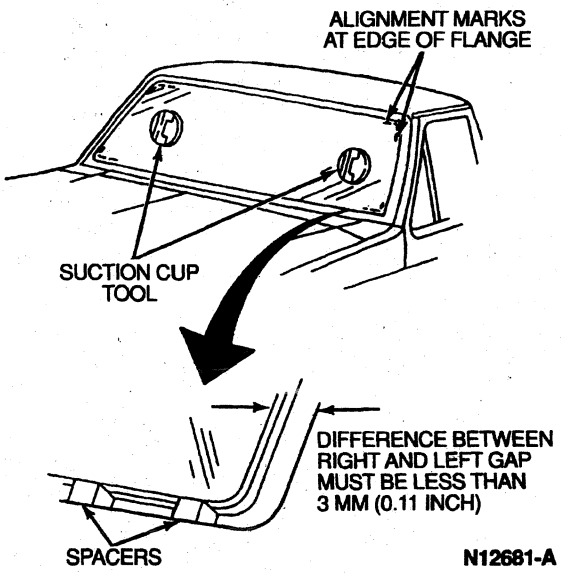

N12681-A

7. Remove windshield glass from vehicle and place on work table with the inside facing up.
8. Thoroughly shake and stir Urethane Glass Primer WSB-M2G314-B to make sure pigment mixes uniformly.
9. Using a kit applicator, apply primer to the outer 13 mm (1/2 inch) of the inside of the windshield glass. Allow at least five minutes drying time.

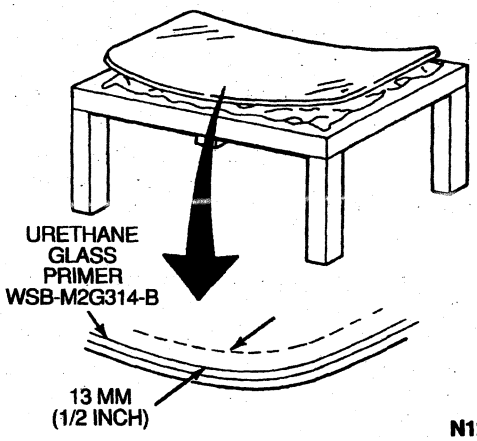

N12682-A

Official Licensed Product
Ford Motor Company

REMOVAL AND INSTALLATION (Continued)

10. Apply an even bead of Urethane Adhesive WSB-M2G316-B around entire windshield glass edge using an air pressure cartridge gun. Air line pressure should be approximately 276 kPa (40 psi). The bead should be triangular in shape, 14 mm (0.55 inch) high, and 8.0 mm (0.33 inch) at base.

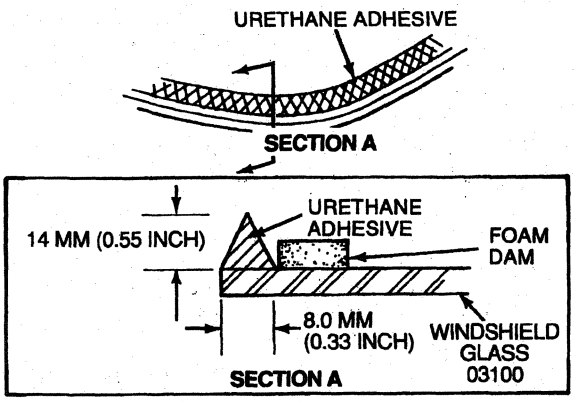

N12683-B

11. Install the windshield glass onto the vehicle, taking care to align the marks on the windshield glass and the body. This must be done before adhesive skins over. Apply enough pressure to seat the windshield glass with the adhesive into the opening.

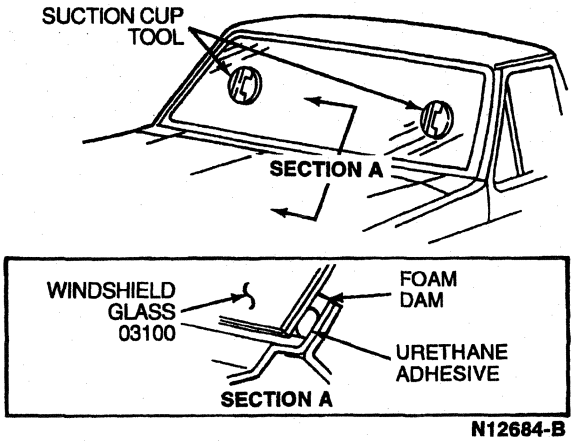

N12684-B

12. Install the retainers, glass stops and mouldings.

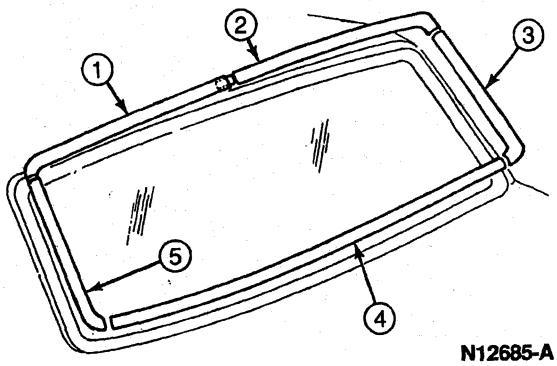

N12685-A

Item	Part Number	Description
1	03045	Windshield Header Seal (RH Upper)
2	03137	Windshield Outside Side Moulding (LH Upper)
3	03137	Windshield Outside Side Moulding (LH)
4	03148	Windshield Outside Moulding (Lower)
5	03136	Windshield Outside Side Moulding (RH)

13. Install windshield wiper mounting arm and pivot shaft, and inside rear view mirror.

Windshield Outside Moulding

SPECIAL SERVICE TOOL(S) REQUIRED

Description	Tool Number
Moulding Tool (RH)	T64P-4006-B
Moulding Tool (LH)	T64P-4006-C

Windshield mouldings surround the windshield glass (03100). Mouldings can be removed with right-hand Moulding Tool T64P-4006-B or left-hand Moulding Tool T64P-4006-C.

Back Window Glass, Fixed

Removal

NOTE: An assistant is required to take hold of the back window glass (42006) as it is pushed out.

1. Remove the garnish mouldings and interior trim necessary to access the back window glass weatherstrip (42084).
2. From vehicle interior, pull down on back window glass weatherstrip and push back window glass and back window glass weatherstrip from back window glass opening.

REMOVAL AND INSTALLATION (Continued)

3. Remove the back window glass weatherstrip from back window glass.

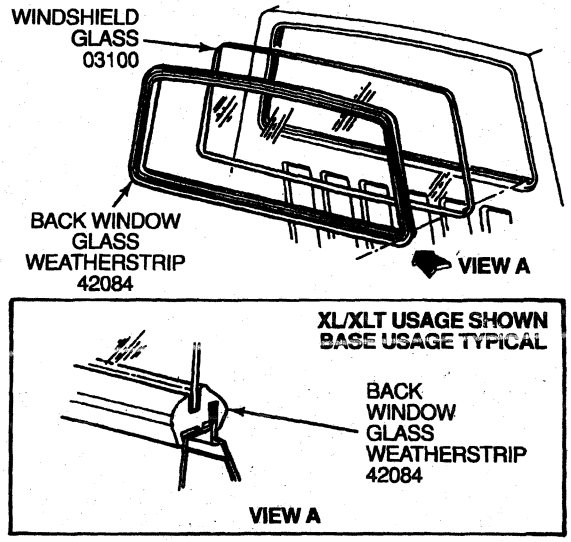

Installation

1. NOTE: All traces of old sealing material must be removed.

   Clean the old seal from the body recess and from the glass assembly.
2. Inspect for sheet metal damage. Check the sealing surface of flange for chipped or missing paint. Repair as necessary.
3. Install the back window glass weatherstrip on the back window glass.
4. Install a draw cord all around the back window glass weatherstrip in the flange crevice, allowing the cord to overlap at the bottom center of the glass. Coat the weatherstrip mounting surface with Rubber Lubricant D9AZ-19583-A or equivalent meeting Ford specification ESA-M1B6-A.

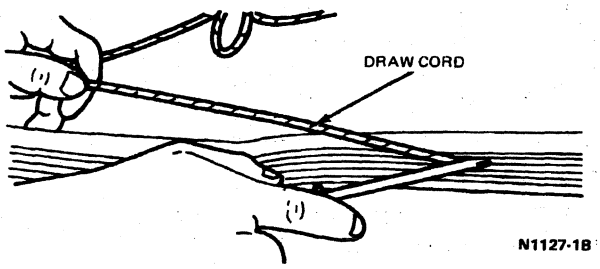

5. Apply Liquid Butyl Sealer C9AZ-19554-B or equivalent meeting Ford specification ESB-M4G162-A to the back window glass seat.
6. Position back window glass and back window glass weatherstrip to the window opening. With an assistant applying hand pressure from outside the cab, pull (from inside) the lip of back window glass weatherstrip over the window opening flange with the draw cord.
7. Pull the back window glass weatherstrip over the lower flange, pulling one end of the cord at a time. Then, pull the back window glass weatherstrip over the side flanges and upper flange.
8. Clean the back window glass and the area around the back window glass to remove all excess sealer.
9. Test for water leaks. If leaks are present, lift weatherstrip lip at leak location and apply Liquid Butyl Sealer C9AZ-19554-B or equivalent meeting Ford specification ESB-M4G162-A. Remove excess sealer.
10. Install interior trim and garnish mouldings.

Official Licensed Product

Back Window Glass, Opening

Removal

1. Remove interior trim and garnish mouldings necessary to access the sliding back window glass weatherstrip.
2. From vehicle interior, pull down the back window glass weatherstrip around the window opening.
3. With the help of an assistant to take hold of the sliding back window glass (42006), push the sliding back window glass out of the window opening from inside the cab.

REMOVAL AND INSTALLATION (Continued)

Sliding Back Window Glass Installation

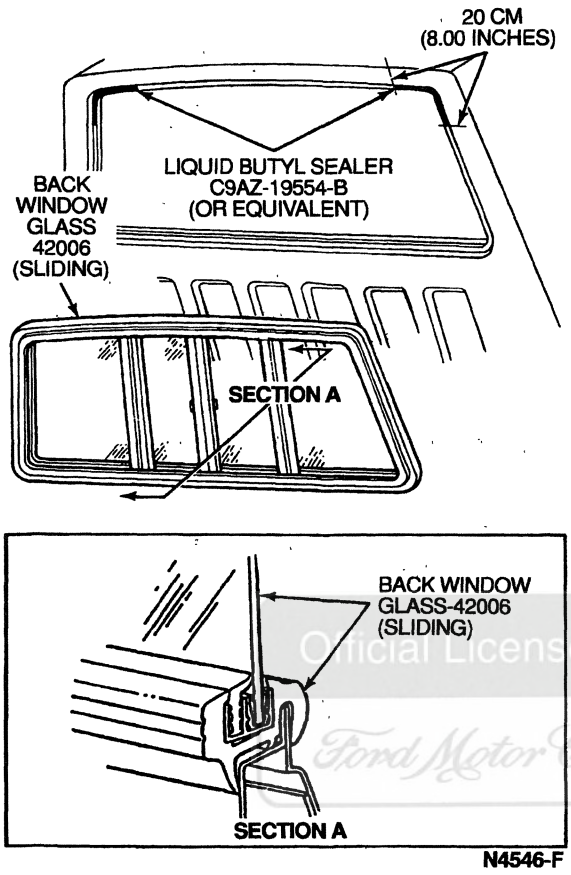

4. Open back window glass (sliding).
5. From the top of the window frame, remove the screw retaining each division bar. Also, remove the two screws retaining the anchor plate in the window track. Remove the plate.
6. Spread the window frame and work the movable panes of the back window glass out of the track. Remove from the frame.
7. If a stationary pane of the back window glass is to be replaced, remove the division bar lower retaining screw. Remove the division bar.
8. Spread the window frame enough to remove the stationary pane from frame.

Installation

1. If a stationary pane of the back window glass is to be replaced, apply Silicone Lubricant COAZ-19553-AA or equivalent meeting Ford specification ESR-M13P4-A to the weatherstrip of the back window glass and track. Spread the frame slightly and slide the stationary pane into frame.
2. Position the division bar into frame and install the lower retaining screw.
3. Spread the frame slightly and install the movable panes of the back window glass into track.
4. Install the division bar upper retaining screws.
5. Install a draw cord into the weatherstrip of the back window glass in the flange crevice, allowing the cord to overlap at the bottom center of the weatherstrip.
6. Apply 203 mm (8 inches) of Liquid Butyl Sealer C9AZ-19554-B or equivalent meeting Ford specification ESB-M4G162-A between the two secondary sealing fins centered on each upper corner of the cab's back window glass opening.
7. Position the back window glass to the window opening.
8. With an assistant applying hand pressure from outside the cab, pull lip of the weatherstrip of the back window glass over the window opening flange with the draw cord.
9. Pull the weatherstrip of the back window glass over the lower flange, pulling one end of the draw cord at a time.
10. Pull the weatherstrip over the side flanges and upper flange.
11. Install any garnish mouldings and interior trim removed.

Weatherstrip, Door Glass Belt

Removal

1. Carefully pry inside and outside front door belt line weatherstrips up and out of the front door window opening. Use care not to damage the paint.

Official Licensed Product
Ford Motor Company

REMOVAL AND INSTALLATION (Continued)

Installation

1. Align inside and outside front door belt line weatherstrips and press into place until the clips engage the door panel slots.

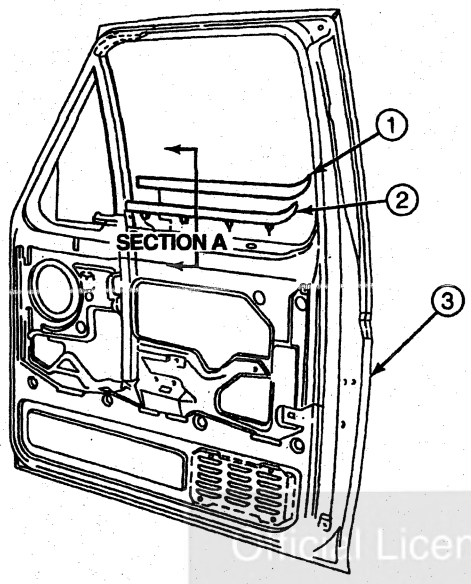

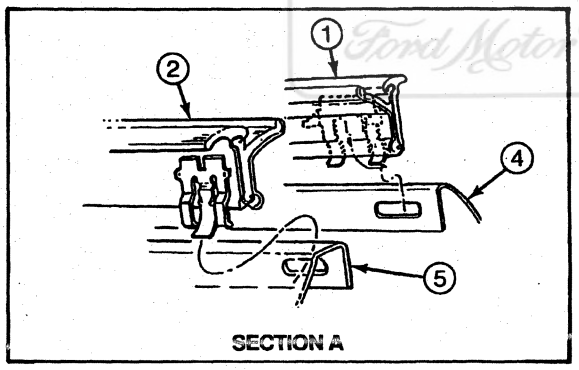

N12687-A

Item	Part Number	Description
1	21452	Front Door Belt Line Outside Weatherstrip
2	21456	Front Door Belt Line Inside Weatherstrip

(Continued)

Item	Part Number	Description
3	20124	Front Door
4	—	Outside Door Panel (Part of 20124)
5	—	Inside Door Panel (Part of 20124)

Weatherstrip, Opening Back Window Glass

The weatherstrip is part of the sliding back window glass (42006) and is not serviced separately.

Window Regulator Control Switch

Removal

1. Remove the screw holding the window regulator switch housing (14527) to the front door trim panel (23942).
2. Insert a small, thin-bladed screwdriver and apply pressure to pry the window regulator switch housing out of front door trim panel.
3. Remove three connector attaching screws from window regulator switch housing.
4. NOTE: The window regulator control switch (14529) is held in place by the electrical contact pins.

   Remove window regulator control switch by carefully prying window regulator control switch from connector with a small screwdriver.

Installation

1. NOTE: The window regulator control switch is keyed to the connector and can only be installed one way.

   Follow removal procedure in reverse order.

Official Licensed Product
Ford Motor Company

REMOVAL AND INSTALLATION (Continued)

Window Switch

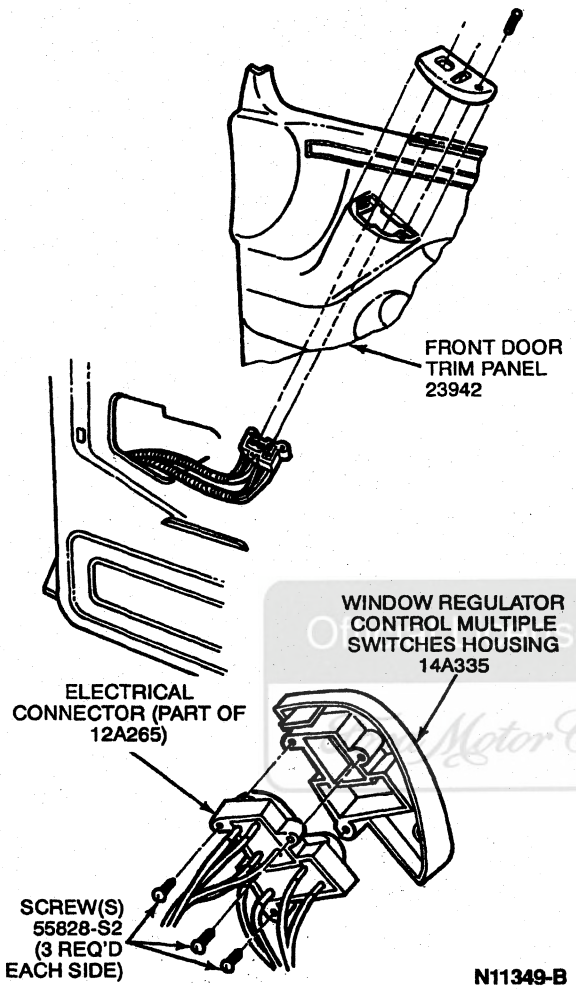

Window Regulator Electric Drive, Front Door

Removal

1. Disconnect the battery ground cable (14301).
2. Remove the front door trim panel (23942) and front door trim shield (237A04).
3. Disconnect wire to window regulator electric drive (23394) from wire harness connector.
4. NOTE: Check inside front door (20124) to make sure electrical wires are not in line with holes to be drilled in the front door inner panel.

   Using a 12.7-mm (1/2-inch) diameter drill bit, drill two holes in the front door inner panel at the drill dimples located opposite two screws retaining window regulator electric drive.
5. Remove the three screws retaining window regulator electric drive using two drilled holes and existing larger hole access to screw heads.
6. Prop the front door window glass in full up position.
7. Push window regulator electric drive toward the front door outer panel to disengage the window regulator electric drive from the gear on the front door window regulator.
8. Remove the window regulator electric drive from inside the front door.

Installation

1. Position the window regulator electric drive and engage window regulator electric drive gear with the gear on the front door window regulator.
2. Install and tighten the window regulator electric drive-to-front door screws to 6-9 N·m (53-80 lb-in).
3. Remove the prop from the front door window glass.
4. Install two pieces of Pressure-Sensitive Waterproof Tape D6AZ-19627-A or equivalent body tape (25.4 mm [1 inch] square) over drilled holes.
5. Connect wiring to window regulator electric drive.
6. NOTE: When the battery (10655) has been disconnected and reconnected, some abnormal drive symptoms may occur while the powertrain control module (PCM)(12A650) relearns its adaptive strategy. The vehicle may need to be driven 16 km (10 miles) to relearn the strategy.

   Connect battery ground cable. Check front door window glass operation.
7. Make sure door drain holes are open.
8. Install front door trim panel and front door trim shield.

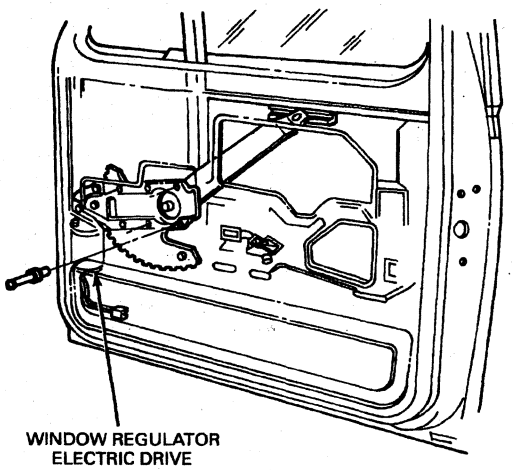

REMOVAL AND INSTALLATION (Continued)

Door Glass Run Retainer, Front

Removal

1. Remove the front door window glass.
2. Pull the front door glass top run (21596) out of the front door window opening and front door glass run latch side retainer.

Front Door Window Assembly

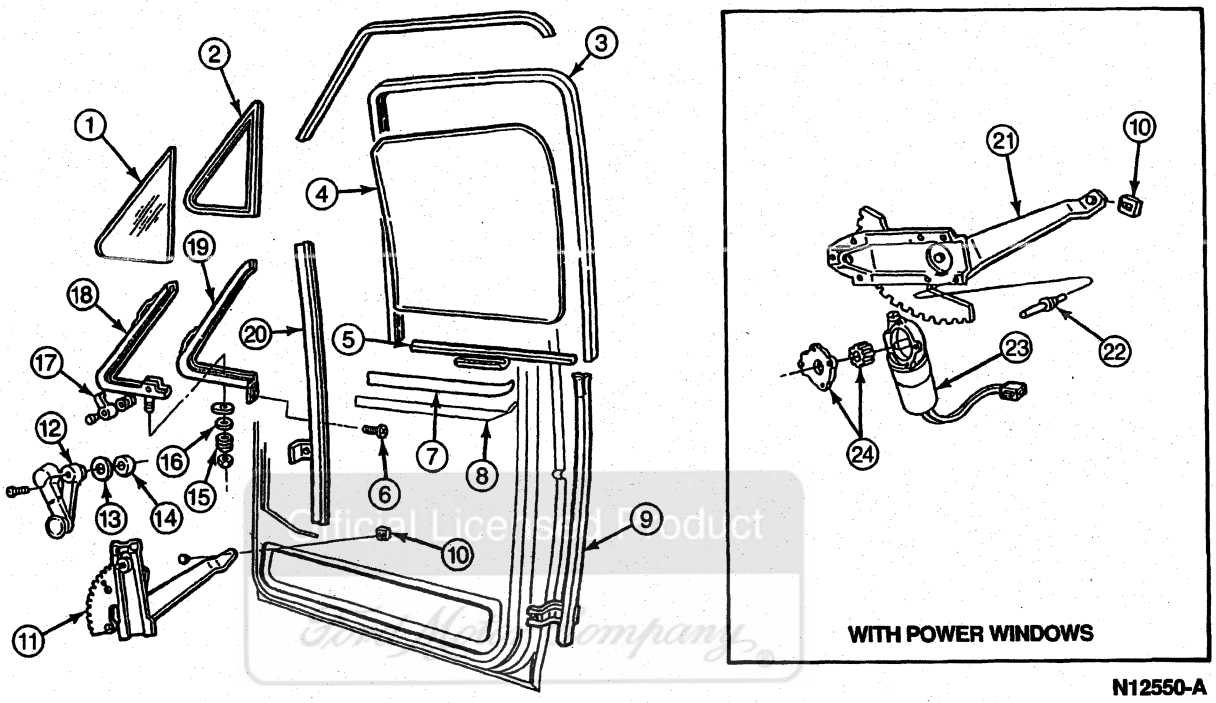

N12550-A

Item	Part Number	Description
1	21402	Front Door Vent Window
2	21448	Weatherstrip, Front Door Vent Window
3	21596	Front Door Glass Top Run
4	21410	Front Door Window Glass
5	21458	Front Door Glass Channel and Retainer
6	351909-S	Screw, Front Door Vent Window Frame-to-Front Door Vent Window Division Bar
7	21452	Front Door Belt Line Outside Weatherstrip
8	21456	Front Door Belt Line Inside Weatherstrip
9	22A00	Front Door Glass Run Latch Side Retainer
10	23240	Window Regulator Arm Roller
11	23200	Front Door Window Regulator
12	23342	Window Regulator Handle

(Continued)

Item	Part Number	Description
13	23370	Window Regulator Handle Plate
14	23227	Window Regulator Handle Seal
15	22926	Pivot Spring, Front Door Vent Window
16	22963	Pivot Washer, Front Door Vent Window
17	22916	Front Door Vent Window Handle
18	21608	Frame, Front Door Vent Window
19	21408	Weatherstrip Retainer, Front Door Vent Window
20	22296	Division Bar, Front Door Vent Window
21	23208	Front Door Power Window Regulator Minus Motor
22	385189-S	Rivet
23	23394	Window Regulator Electric Drive
24	234A24	Window Regulator Drive Gear Kit

REMOVAL AND INSTALLATION (Continued)

3. Remove the front door glass run latch side retainer-to-front door inner panel screw.
4. Twist and guide the front door glass run latch side retainer up and out of the front door.

Installation

1. Follow removal procedure in reverse.

Door Glass Run Retainer, Rear

Refer to Door Window Glass, Rear, in the Removal and Installation portion of this section.

Division Bar

Removal

1. Remove the front door window glass.
2. Twist the front door vent window division bar up and out of the front door (20124).

Installation

1. Position front door rear window division bar into the front door.
2. Install the front door window glass.

Door Glass Top Run, Front

Refer to Door Glass Run Retainer, Front, in the Removal and Installation portion of this section.

Rear Door Window, Crew Cab

Licensed Product
Ford Motor Company

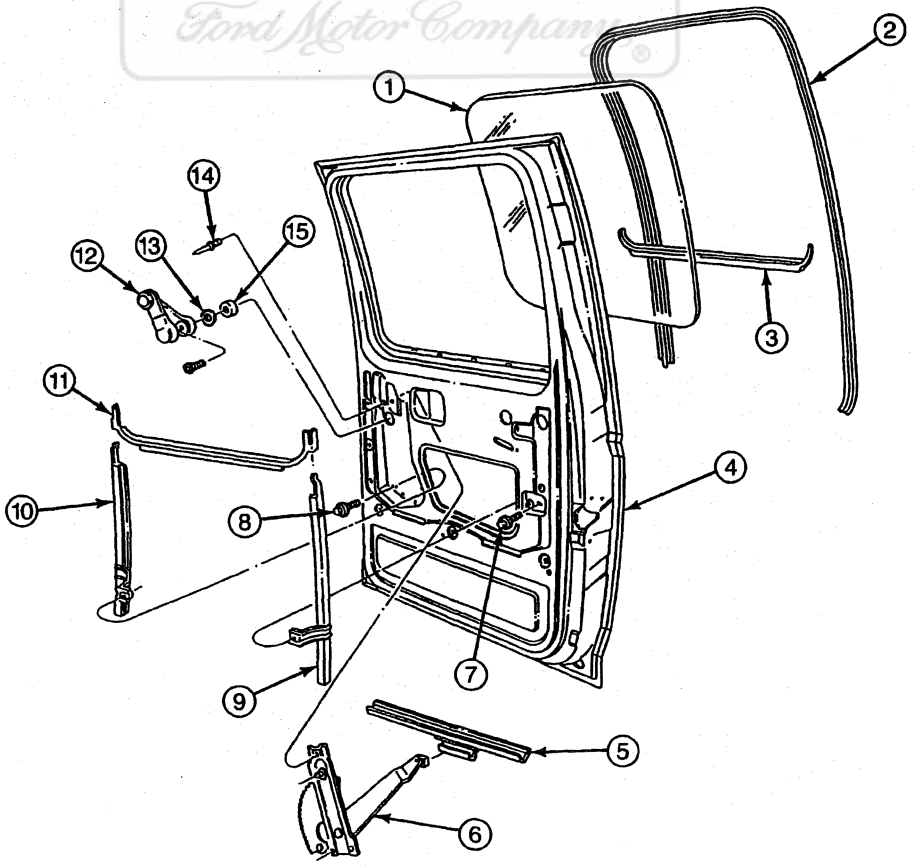

N12676-A

REMOVAL AND INSTALLATION (Continued)

Item	Part Number	Description
1	25712	Rear Door Window Glass
2	25766	Rear Door Glass Run
3	25596	Rear Door Glass Outside Weatherstrip
4	24630	Rear Door
5	26228	Rear Door Window Glass Channel
6	23200	Rear Door Window Regulator
7	N800510-S100	Screw, Rear Door Glass Run Rear Lower Retainer-to-Rear Door
8	N800510-S100	Screw, Rear Door Glass Run Front Lower Retainer-to-Rear Door

(Continued)

Item	Part Number	Description
9	25804	Rear Door Glass Run Rear Lower Retainer
10	25796	Rear Door Glass Run Front Lower Retainer
11	25860	Rear Door Glass Inside Weatherstrip
12	23342	Window Regulator Handle
13	23370	Window Regulator Handle Plate
14	385189-S100	Rivet, Window Regulator-to-Rear Door (3 Req'd)
15	23227	Window Regulator Handle Seal

Door Glass Top Run, Rear

Removal

1. Remove the rear door window glass.
2. Pull the rear door glass run out of the rear door window opening and the rear door glass run rear lower retainer.

Installation

1. Set rear door glass run into rear door window opening and rear door glass run rear lower retainer.
2. Install rear door window glass.

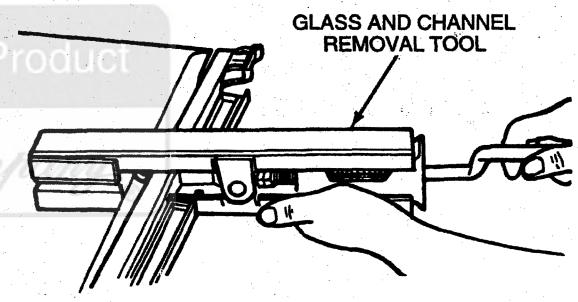

DN0202-A

Window Glass, Vent

Removal

1. Open front door vent window.
2. Push the front door vent window (21402) from frame using a commercially available glass and channel removal tool.
3. Clean the front door vent window of tape and sealer.

Installation

1. Apply sealer to the front door vent window frame.
2. Install front door vent window and new tape into front door vent window frame using a commercially available glass and channel removal tool.
3. Trim the excess tape around the front door vent window frame and clean the front door vent window and surrounding area.

Window, Vent Weatherstrip

Removal

1. Remove the front door trim panel (23942).
2. Remove the screw retaining the front door vent window division bar to the front door inner panel.
3. Remove the two screws attaching front door vent window frame to the leading edge of front door (20124).
4. Lower front door window glass to full down position.
5. Pull the front door glass top run (21596) out of the front door vent window division bar.
6. Tilt the front door vent window and front door vent window division bar toward the rear of the front door and remove the front door vent window and frame assembly from the front door.
7. Remove the retaining nut and front door vent window pivot spring from the vent window lower pivot.

Digital Licensed Product
Ford Motor Company

REMOVAL AND INSTALLATION (Continued)

8. Separate the front door vent window weatherstrip retainer and the pivot stops from the front door vent window frame and front door vent window weatherstrip.

Installation

1. Position the front door vent window glass frame with the pivot stops into the front door vent window weatherstrip retainer and front door vent window weatherstrip assembly.
2. Install the front door vent window pivot spring and retaining nut. Adjust spring tension for proper operation.
3. Position front door vent window glass and front door vent window division bar into front door and to the glass edge. Make sure front door window spacer is in place.

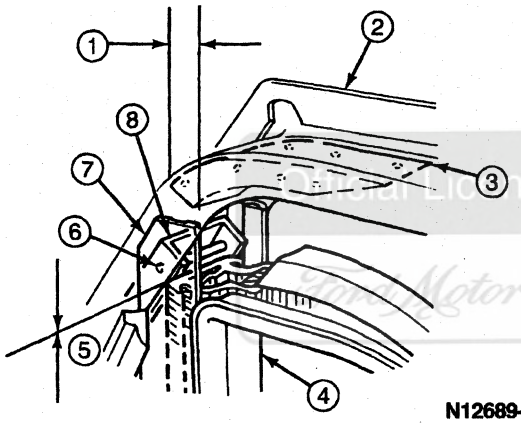

N12689-A

Item	Part Number	Description
1	—	Front Edge of Door Window Glass Channel Bracket Retainer 11-18 mm (0.5-0.75 Inch) Forward of Rear Edge of the Front Door Vent Window Division Bar. Tapered End Aft.
2	20124	Front Door
3	234A46	Door Window Glass Channel Bracket Retainer
4	21596	Front Door Glass Top Run
5	—	Notch in Front Door Glass Top Run Butted Against Front Door Vent Window Weatherstrip Retainer Reinforcement Pin.
6	—	Front Door Vent Window Weatherstrip Retainer Reinforcement Pin (Part of 21408)
7	22296	Front Door Vent Window Division Bar
8	21408	Front Door Vent Window Weatherstrip Retainer

4. Install the vent window frame to leading edge of the front door with two retaining screws.
5. Install screw attaching front door vent window division bar. Adjust the front door vent window division bar so that the front door window glass is not loose or binding.
6. Install the front door trim panel and retaining screws.

Window Glass, Rear Quarter

Removal

1. Remove upper quarter trim panel (52018) around quarter window glass.
2. Remove six nuts retaining quarter window glass from the inside of the vehicle.
3. Remove the quarter window glass by pushing with enough pressure to separate the butyl seal.

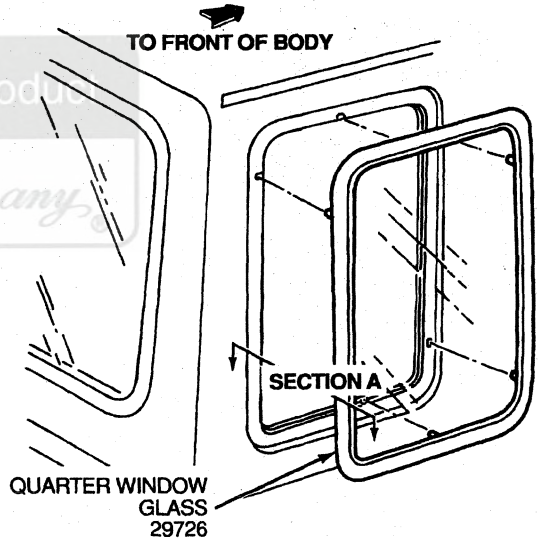

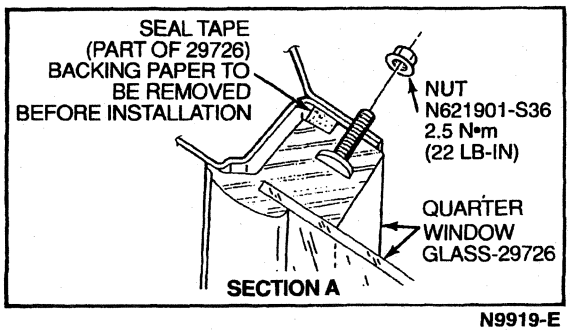

N9919-E

4. Clean the old seal from the body recess and from the quarter window glass. All traces of the old sealing material must be removed.
5. Inspect for sheet metal damage. Check the sealing surface of the flange for chipped or missing paint. Repair as necessary.

Ford Motor Company Licensed Product

REMOVAL AND INSTALLATION (Continued)

Installation

1. NOTE: Sheet metal flange and quarter window glass must be clean and free of defects.

   Apply Foam Core Butyl Service Tape to the back side of the quarter window glass on the sealing surface, if not already present, and remove protective backing paper.
2. Press quarter window glass assembly into place. Use enough pressure to seat the quarter window glass firmly, but avoid damaging or distorting quarter window glass.
3. Install the six quarter window glass nuts and tighten to 2.5 N·m (22 lb-in).
4. Test for leaks. If leaks are present, repeat above steps.
5. Install upper quarter trim panel around quarter window glass.

Latch, Opening Back Window Glass

The sliding back window glass latch is part of the sliding back window glass (42006) and is not serviced separately.

LUBRICATION

Window Regulators

The door window regulators should be properly lubricated to provide ease of operation. The window glass mechanism should be lubricated whenever the glass channel or window regulator is removed, or excessive effort is required to operate the windows. To lubricate a door window mechanism, apply an even coating of Multi-Purpose Grease D7AZ-19584-AA or equivalent meeting Ford specification ESR-M1C159-A and ESB-M1C106-B to the window regulator rollers, shafts and the entire length of the roller guides as illustrated by the shaded areas.

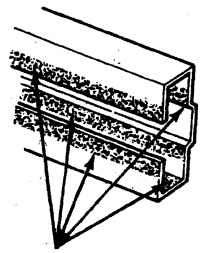

EVEN COATING OF MULTI-PURPOSE GREASE D7AZ-19584-AA (ESR-MIC159-A AND ESB-M1C106-B) OR EQUIVALENT

N6024-F

Glass Friction Areas

Lubricate glass friction areas with Ford Silicone Lubricant D7AZ-19553-AA or equivalent meeting Ford specification ESR-M13P4-A.

ADJUSTMENTS

Window Mechanism, Front Door

The front door window glasses can be adjusted fore or aft by loosening screws attaching the front door vent window division bar or front door glass run latch side retainer to the front door inner panel.

Window Mechanism, Rear Door

The rear door window glass can be adjusted by loosening the rear door glass run front or rear lower retainer-to-rear door screws.

SPECIFICATIONS

LUBRICANT/ADHESIVE/CLEANER SPECIFICATIONS

Description	Part Number	Ford Specification
Equalizer Cutting Lubricant	ECL-784	—
Urethane Kit	EOAZ-19562-A	—
Urethane Adhesive	—	WSB-M2G316-B
Urethane Glass Primer	—	WSB-M2G314-B
Urethane Metal Primer	—	WSB-M2G-234-C
Rearview Mirror Adhesive	D9AZ-19554-CA	ESB-M2G176-A
Rubber Lubricant	D9AZ-19583-A	ESA-M1B6-A
Liquid Butyl Sealer	C9AZ-19554-B	ESB-M4G162-A
Silicone Lubricant	COAZ-19553-AA	ESR-M13P4-A
Waterproof Tape	D6AZ-19627-A	ESB-M3G58-A
Silicone Lubricant	D7AZ-19553-AA	ESR-M13P4-A

WINDOW REGULATOR ELECTRIC DRIVE CURRENT DRAW

Specification	Condition
4 Amps Maximum with No Fluctuation	No Load

TORQUE SPECIFICATIONS

Description	N·m	Lb-in
Quarter Window Glass Nut	2.5	22
Window Regulator Electric Drive-to-Front Door Screws	6-9	53-80

(Continued)

Official Licensed Product
Ford Motor Company

SPECIFICATIONS (Continued)

TORQUE SPECIFICATIONS (Cont'd)

Description	N·m	Lb-In
Window Regulator Handle Screw	4-5	35-44
Back Window Glass Run-to-Tailgate Bolt	6-11	53-97
Tailgate Regulator Bolts	6-11	53-97

ROTUNDA EQUIPMENT

Model	Description
014-00407	Digital Volt-Ohmmeter
107-R0300	Heat Gun
107-R0600	Blind Fastener Installation Tool
164-R2450	Interior Auto Glass Cut-Out Knife Kit

SPECIAL SERVICE TOOLS/EQUIPMENT

SPECIAL SERVICE TOOLS REQUIRED

Tool Number/ Description	Illustration
T64P-42006-B Moulding Tool (RH)	T64P-42006-B
T64P-42006-C Moulding Tool (LH)	T64P-42006-C

Official Licensed Product
Ford Motor Company

SECTION 01-12 Instrument Panel and Console

SUBJECT	PAGE
VEHICLE APPLICATION	01-12-1
PARTS REPLACEMENT	
Steering Column	01-12-1
DIAGNOSIS AND TESTING	
Electrical Schematic Reference(s)	01-12-1
REMOVAL AND INSTALLATION	
Finish Panel, Instrument Panel	01-12-8
REMOVAL AND INSTALLATION (Cont'd.)	
Instrument Cluster	01-12-8
Instrument Panel	01-12-2
Instrument Panel Pad	01-12-2
Power Point	01-12-1
SPECIFICATIONS	01-12-9
SPECIAL SERVICE TOOLS/EQUIPMENT	01-12-9

VEHICLE APPLICATION

F-250 Heavy Duty, F-350 and F-Super Duty

PARTS REPLACEMENT

Steering Column

After an accident, the steering column might have been loaded sufficiently to deform steering column mounting brackets or damage wiring. Inspect the column structure to make sure that any damaged components are replaced. Refer to Section 11-04.

Licensed Product
Ford Motor Company

DIAGNOSIS AND TESTING

Electrical Schematic Reference(s)

Refer to Electrical and Vacuum Troubleshooting Manual, Cell 44, Horn/Cigar Lighter for schematic and connector information.

REMOVAL AND INSTALLATION

Power Point

CAUTION: Do not use the cigar lighter socket and retainer (15055) in place of power point.

Removal

1. Remove instrument panel ash receptacle (04810).
2. NOTE: Do not pry on plastic bezel to remove.

   Reach through ash receptacle opening and squeeze four retaining tabs on back of bezel.
3. Pull assembly from instrument panel (04320) and unplug wiring connector.

REMOVAL AND INSTALLATION (Continued)

Installation

1. Follow removal procedure in reverse order.

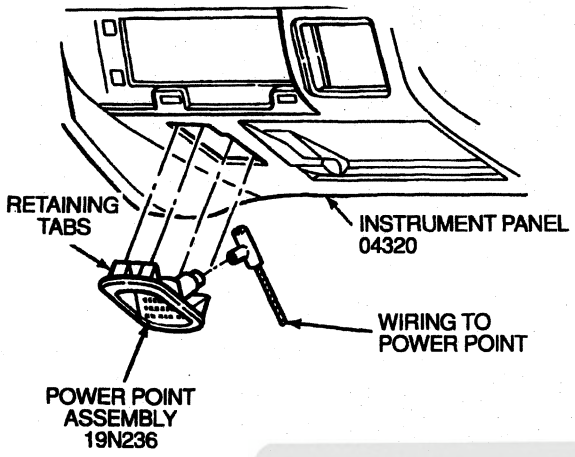

R8431-D

Instrument Panel Pad

SPECIAL SERVICE TOOL(S) REQUIRED

Description	Tool Number
Radio Removing Tool	T87P-19061-A

Removal

1. Remove radio, using Radio Removing Tool T87P-19061-A or equivalent.
2. Remove glove compartment door finish panel (06036).
3. Using the radio and glove compartment door openings, remove the seven nuts retaining instrument panel pad (04282).
4. Remove the instrument panel pad from vehicle.

Installation

1. Follow removal procedure in reverse order.

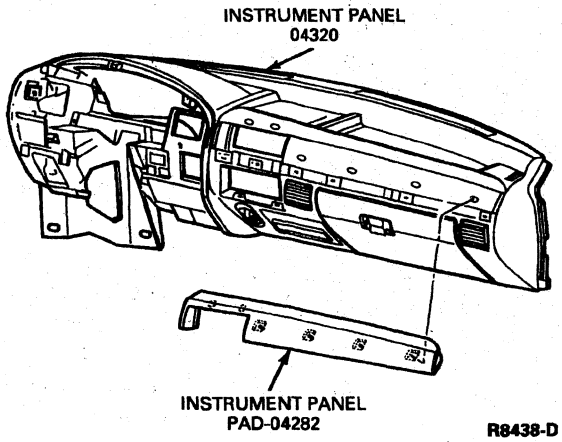

R8438-D

Instrument Panel

SPECIAL SERVICE TOOL(S) REQUIRED

Description	Tool Number
Radio Removing Tool	T87P-19061-A

Removal

1. Disconnect battery ground cable (14301).
2. Disconnect connectors from rear lamp wiring (14405) and engine control sensor wiring (12A581) to instrument panel (04320), in engine compartment, by loosening the bolts and separating the connectors.

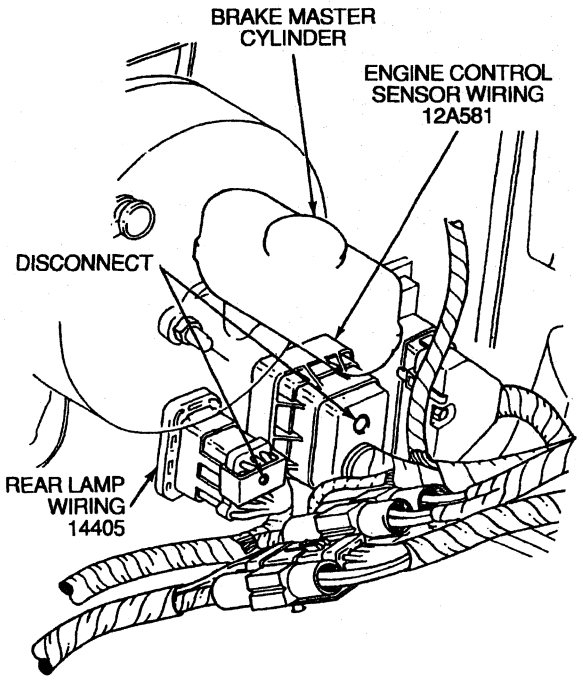

R8442-D

Official Licensed Product
Ford Motor Company

REMOVAL AND INSTALLATION (Continued)

3. Remove radio, using Radio Removing Tool T87P-19061-A.
4. Remove RH and LH windshield side garnish mouldings (03598).

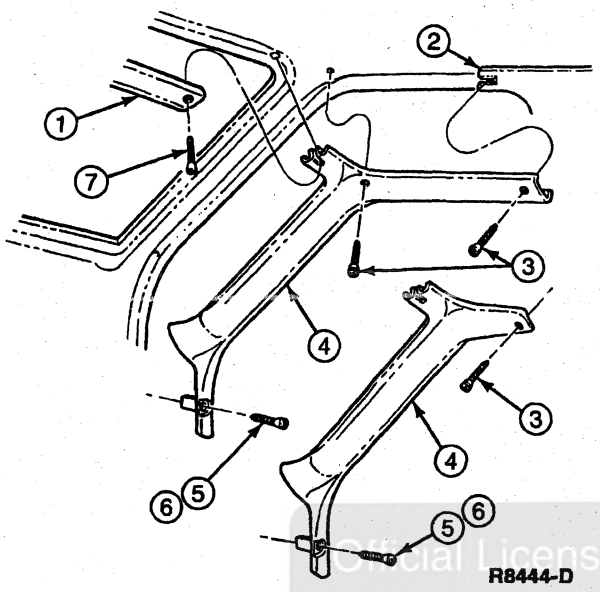

Item	Part Number	Description
1	03606	Windshield Garnish Moulding
2	24356	Body Pillar Trim Panel

(Continued)

Item	Part Number	Description
3	N801157-S58	Screw and Washer (3 Req'd)
4	03598	Windshield Side Garnish Moulding
5	N806878-S58	Screw and Washer (RH)
6	N804992-S424	Screw and Washer (LH)
7	N806578-S58	Screw and Washer (RH)

5. Remove four screws retaining top of instrument panel to cowl top.

Official Licensed Product
Ford Motor Company

REMOVAL AND INSTALLATION (Continued)

Instrument Panel to Cowl Top Assembly

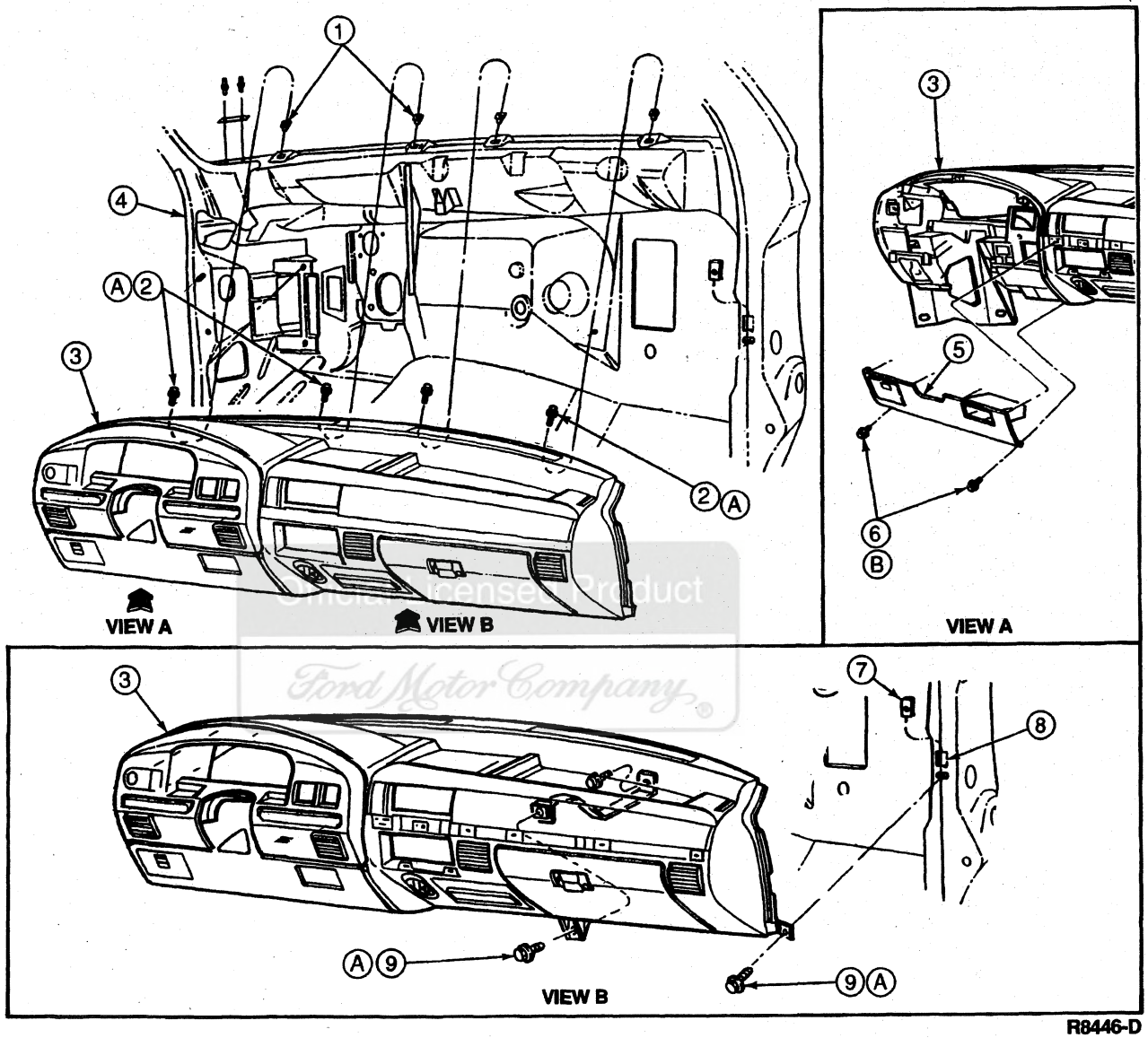

R8446-D

Item	Part Number	Description
1	N805849-S	Nut Insert (4 Req'd)
2	N807127-S411	Screw(s)
3	04320	Instrument Panel
4	02039	Cowl Side Panel (LH)
5	044F08	Steering Column Opening Cover
6	N803876-S36	Screw(s)

(Continued)

Item	Part Number	Description
7	N800854-S32B	U-Nut
8	02038	Cowl Side Panel (RH)
9	N606676	Screw(s)
A	—	Tighten to 2-2.4 N·m (18-21 Lb-In)
B	—	Tighten to 2-3 N·m (18-27 Lb-In)

6. Remove hood latch control handle and cable (16916) from LH cowl side panel (02039) and lay assembly on front floor.

7. Remove RH cowl side panel (02038) and LH cowl side panel.

REMOVAL AND INSTALLATION (Continued)

8. Remove two screws retaining the instrument panel steering column opening cover assembly to underside of instrument panel.
9. Remove cover by pulling at top of cover to unsnap the four retaining clips.
10. Pull radio antenna lead in cable (18812) down, unsnap wire from bottom of instrument panel and lay wire on floor carpet (13000).
11. NOTE: Some vehicles have two lower braces.

    Remove bolt retaining instrument panel to panel brace.
12. Remove screw and washer assembly located at lower corner on right side of instrument panel.
13. Disconnect the wiring connectors from the main wiring (14401) harness at RH cowl side panel.

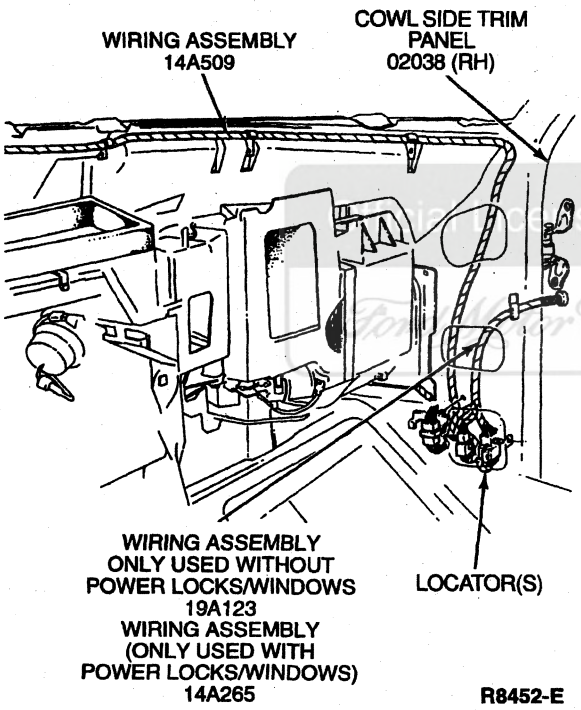

14. Disconnect the wiring connector from the parking brake control (2780).

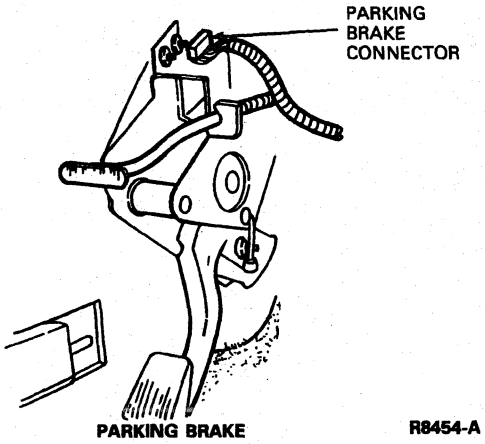

15. Remove three nuts retaining the parking brake control to the left cowl side panel and lay assembly on floor carpet. Do not disconnect the parking brake cable.
16. Vehicles with column shift: disconnect the shift cable from the steering column and shift cable and bracket (7E395).
17. Disconnect the wiring connector from the brake light switch.
18. Vehicles with manual transmission: disconnect the wiring connector from the clutch interlock switch.

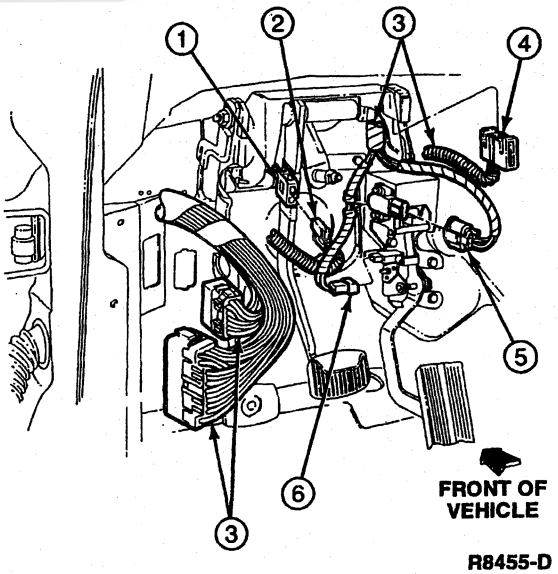

Item	Part Number	Description
1	13480	Stoplamp Switch
2	—	To Stoplamp Switch (Part of 14401)
3	14401	Main Wiring

(Continued)

REMOVAL AND INSTALLATION (Continued)

Item	Part Number	Description
4	—	To Clutch Interlock Switch (Part of 14401)
5	—	To Pedal Position Sensor (D.I. Turbo) (Part of 14401)
6	—	To Idle Position Sensor (D.I. Turbo) (Part of 14401)

19. Disconnect the wiring connectors from main wiring at left cowl side panel.

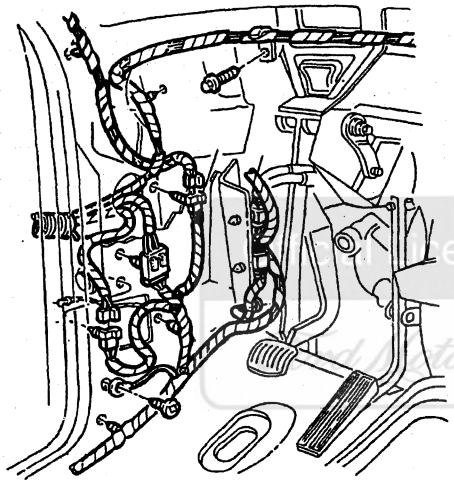

R11828-A

20. Remove pinch bolt from steering column to lower steering column shaft (3B676). Compress lower steering column shaft toward engine and separate from the column U-joint.
21. NOTE: Steps 21, 22 and 23 require two technicians.

    Support the instrument panel and remove the three bolts and one nut retaining the left side of instrument panel.

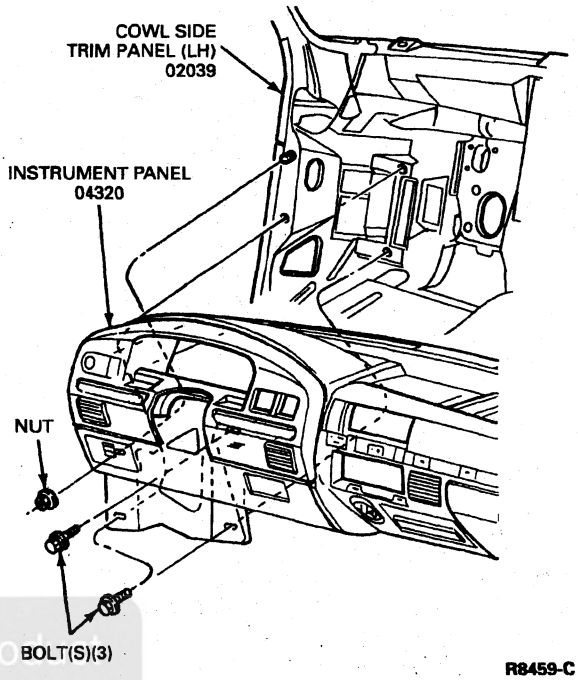

R8459-C

22. Pull instrument panel rearward and disconnect the heater controls (18549) and air conditioner vacuum line connector, if so equipped. Disconnect any remaining wiring harnesses.
23. Carefully remove instrument panel from vehicle through front door (20124).
24. If replacing instrument panel, transfer all components to the replacement instrument panel.

Installation

1. NOTE: When the battery (10655) is disconnected and reconnected, some abnormal drive symptoms may occur while the powertrain control module (PCM)(12A650) relearns its adaptive strategy. The vehicle may need to be driven 16 km (10 miles) or more to relearn the strategy.

   Follow removal procedure in reverse order.

Unlicensed Product Ford Motor Company

REMOVAL AND INSTALLATION (Continued)

Instrument Panel Disassembled View

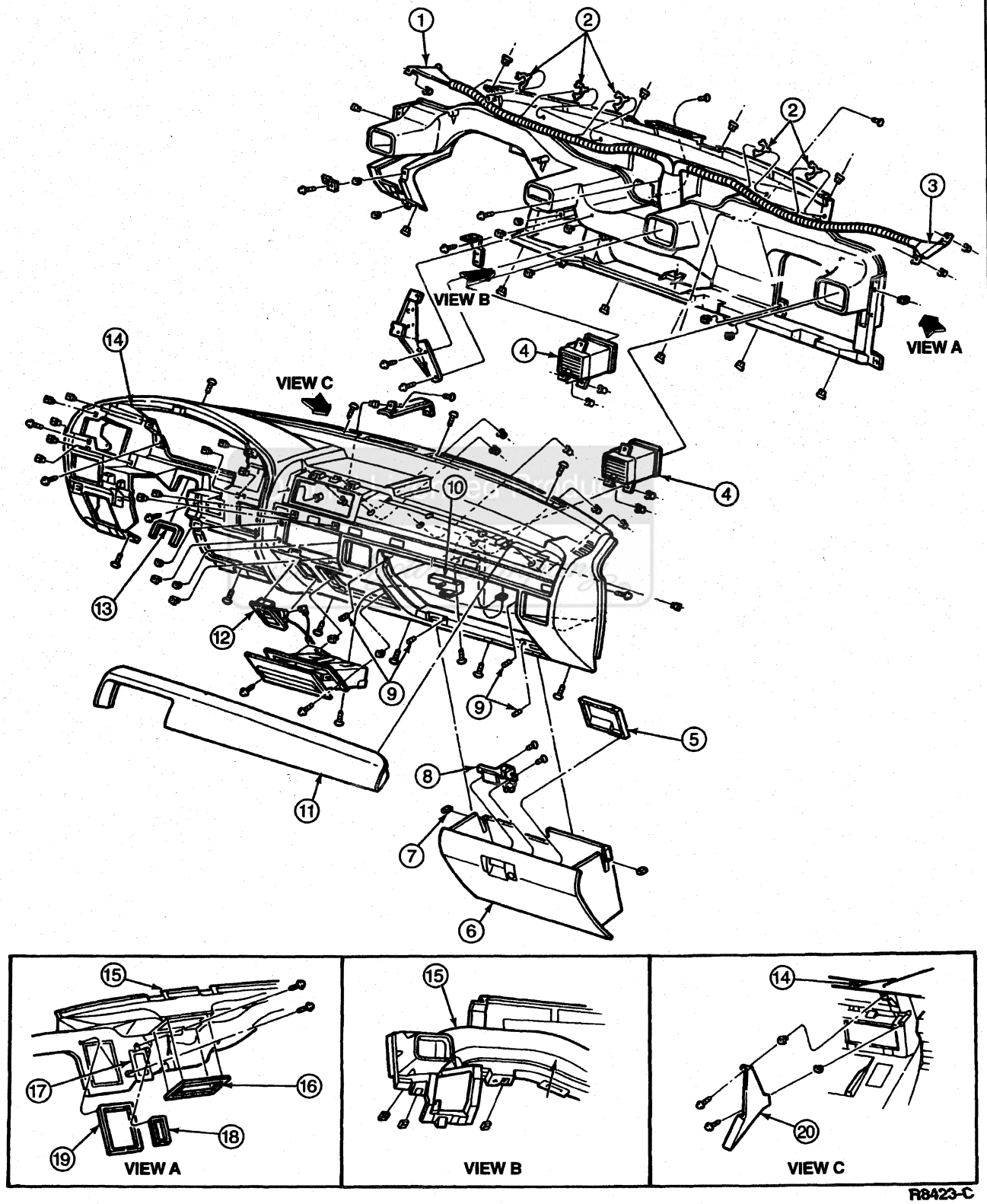

REMOVAL AND INSTALLATION (Continued)

Item	Part Number	Description
1	19E630	A/C Side Window Demister and Hose (LH)
2	19B632	A/C Accumulator Tube Support Clip
3	19E630	A/C Side Window Demister and Hose (RH)
4	19893	A/C Registers
5	061A40	Glove Compartment Door Latch Cover
6	06024	Glove Compartment
7	06115	Glove Compartment Bumpers
8	06004	Glove Compartment Door Latch
9	N805979-S	Glove Compartment Bumpers
10	5A563	Lamp and Catch Assy
11	04282	Pad and Retainer
12	19N236	Power Point
13	01657	Steering Column Opening Insulator
14	04320	Instrument Panel
15	19E726	Duct and Support Assy
16	18C367	Defrost Seal Nozzle
17	19E680	Connector
18	19C901	Demister Seal
19	19C901	A/C Seal
20	047A32	Instrument Panel Center Bracket

(Continued)

Instrument Cluster

Refer to Section 13-01.

Finish Panel, Instrument Panel

Removal

1. Vehicles with tilt column, position steering wheel (3600) in full down position.
2. Vehicles with column shift, set parking brake control (2780) and position shift lever to the lowest position.
3. Unsnap the right and left mouldings by carefully prying on the notches at bottom of mouldings.
4. Using a small, flat-bladed screwdriver, release retaining knob on back of headlamp switch knob while pulling knob away from shaft. Remove (unscrew) trim bezel located behind headlamp switch knob.

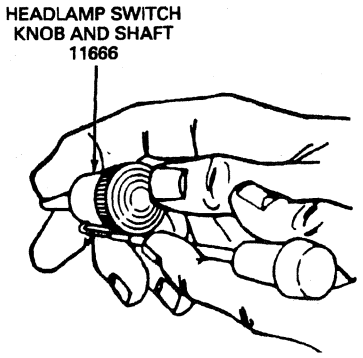

5. Remove the two exposed screws under the right and left mouldings.
6. Unsnap five retaining clips by pulling the instrument panel finish panel (044D70) rearward, starting with the two at the steering column (one each side) and then the three at top of instrument panel finish panel.
7. NOTE: Wiring is connected to instrument panel finish panel.

   Disconnect the wiring connectors from instrument panel finish panel.

Installation

1. Follow removal procedure in reverse order.

Official Licensed Product
Ford Motor Company

REMOVAL AND INSTALLATION (Continued)

Instrument Panel Finish Panel

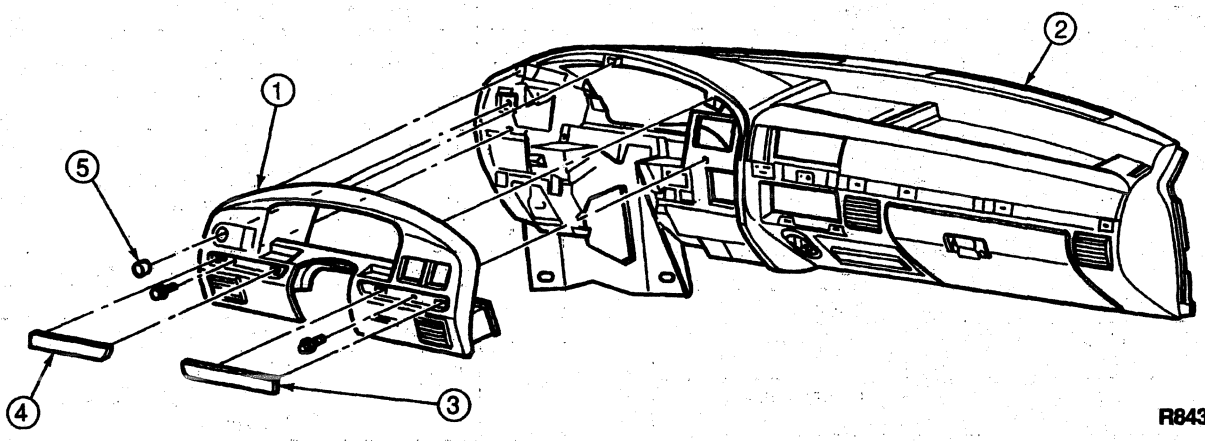

R8436-D

Item	Part Number	Description
1	044D70	Instrument Panel Finish Panel
2	04320	Instrument Panel

(Continued)

Item	Part Number	Description
3	046A62	Moulding (RH)
4	046A63	Moulding (LH)
5	11661	Headlamp Switch Knob and Shaft

Official Licensed Product
Ford Motor Company

SPECIFICATIONS

TORQUE SPECIFICATIONS

Description	N·m	Lb-In
Instrument Panel-to-Dash Screw(s)	2-2.4	18-21
Steering Column Opening Cover Screw(s)	2-3	18-27
Lower Instrument Panel Screw	2-2.4	18-21
Instrument Panel to Right Side Cowl	2-2.4	18-21

SPECIAL SERVICE TOOLS/EQUIPMENT

SPECIAL SERVICE TOOLS REQUIRED

Tool Number/ Description	Illustration
T87P-19061-A Radio Removing Tool	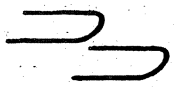 T87P-19061-A

SECTION 01-14A Handles, Locks, Latches and Mechanisms

SUBJECT	PAGE
VEHICLE APPLICATION	01-14A-1
DIAGNOSIS AND TESTING	
Electrical Schematic Reference(s)	01-14A-1
Handles, Locks, Latches and Mechanisms	01-14A-1
Component Tests	01-14A-5
Actuator, Power, Door Lock	01-14A-5
Switch, Door Lock	01-14A-5
Inspection and Verification	01-14A-1
Pinpoint Tests	01-14A-2
Symptom Chart	01-14A-1
REMOVAL AND INSTALLATION	
Actuator, Power Door Lock	01-14A-11
Control Switch, Door Lock	01-14A-12
Door Handle/Latch Assembly	01-14A-6
REMOVAL AND INSTALLATION (Cont'd.)	
Handle, Inside Door, Front and Rear	01-14A-12
Handle, Outside Door, Front	01-14A-12
Latch, Door, Front	01-14A-6
Latch, Door, Rear, Crew Cab	01-14A-8
Lock Cylinder, Door	01-14A-10
Release Control Assembly, Tailgate	01-14A-12
Remote Control Assembly, Door Latch, Rear, Crew Cab	01-14A-10
Remote Control Link, Door Latch, Front	01-14A-10
ADJUSTMENTS	
Striker, Door Latch	01-14A-14
SPECIFICATIONS	01-14A-14
SPECIAL SERVICE TOOLS/EQUIPMENT	01-14A-14

VEHICLE APPLICATION

F-250 Heavy Duty, F-350 and F-Super Duty Chassis Cab

Unauthorized Product
Ford Motor Company

DIAGNOSIS AND TESTING

Electrical Schematic Reference(s)

Refer to Electrical and Vacuum Troubleshooting Manual, Cell 110, Power Door Locks for schematic and connector information.

Handles, Locks, Latches and Mechanisms

Inspection and Verification

1. Verify the original concern by operating the handles, locks, latches and mechanisms to duplicate the concern.
2. NOTE: Before starting electrical diagnosis, check for mechanical binds by manually operating door lock. Then operate lock system several times from each switch, while observing the operation of all door locks. Be sure battery is fully charged.

   Inspect to determine if one of the following mechanical or electrical concerns apply.

VISUAL INSPECTION CHART

Mechanical	Electrical
• Binding latch mechanisms • Binding linkage • Misaligned door	• Circuitry open / shorted • Damaged door lock switch • Damaged power door lock actuator

3. If the concern(s) remains after the inspection, determine the symptom(s) and proceed to the following symptom chart.

Symptom Chart

Refer to the Electrical and Vacuum Troubleshooting Manual for the connector numbers in the pinpoint tests.

DIAGNOSIS AND TESTING (Continued)

NOTE: Use Rotunda 73 Digital Multimeter 105-R0051 or equivalent to perform electrical pinpoint tests.

POWER DOOR LOCK DIAGNOSIS

Condition	Possible Source	Action
• One Door Lock Inoperative	• Circuitry. • Power door lock actuator.	• GO to Pinpoint Test A.
• All Door Locks Inoperative	• Locks circuit breaker open. • Battery/power circuit. • Poor ground. • Circuitry. • Door lock switch.	• GO to Pinpoint Test B.
• All Locks Operate from One Switch Only	• Power to switch. • Door lock switch. • Circuitry.	• GO to Pinpoint Test C.
• Door Locks Operate One Way Only	• Circuitry. • Poor ground. • Left door lock switch.	• GO to Pinpoint Test D.
• Door Locks Work Intermittently	• Battery partially charged. • Connections loose, opening or shorting. • Intermittent door lock switch or power door lock actuator.	• GO to Pinpoint Test E.

Pinpoint Tests

Official Licensed Product Ford Motor Company®

PINPOINT TEST A: ONE DOOR LOCK INOPERATIVE

Test Step		Result	Action to Take
A1	CHECK OPERATION OF SUSPECT DOOR LOCK		
	• Manually operate inoperative door lock. • Check for binding or stuck condition. • **Is lock stuck or binding?**	Yes ▶ No ▶	SERVICE as required. GO to **A2.**
A2	CHECK SUSPECT POWER DOOR LOCK ACTUATOR LOCK OPERATION		
	• Gain access to suspect power door lock actuator. Refer to Actuator, Power Door Lock, in the Removal and Installation portion of this section. • Disconnect power door lock actuator. • Using a test lamp connected to a known good ground, check Circuit 117 (PK/BK) at harness connector while actuating door locks in the lock position. • **Did test lamp illuminate?**	Yes ▶ No ▶	GO to **A3.** SERVICE Circuit 117 (PK/BK) for open circuit. RETEST system.
A3	CHECK POWER DOOR LOCK ACTUATOR FOR UNLOCK OPERATION		
	• Remove test lamp from Circuit 117 (PK/BK) and connect it to Circuit 118 (PK/O). • Actuate switch in the unlock position. • **Did test lamp illuminate?**	Yes ▶ No ▶	GO to **A4.** SERVICE Circuit 118 (PK/O) for open circuit. RETEST system.
A4	CHECK POWER DOOR LOCK ACTUATOR		
	• Using two 10 gauge jumper wires connected to battery positive (+) and negative (-), attach jumpers to actuator connector; reverse polarity for opposite direction. • **Did actuator operate correctly?**	Yes ▶ No ▶	GO to **A5.** REPLACE power door lock actuator. RETEST system.

DIAGNOSIS AND TESTING (Continued)

PINPOINT TEST A: ONE DOOR LOCK INOPERATIVE (Continued)

Test Step		Result ▶	Action to Take
A5	CHECK POWER DOOR LOCK ACTUATOR CURRENT DRAW		
	• Using Rotunda 73 Digital Multimeter 105-R0051 or equivalent, check actuator current draw. • **Is current draw 6 amps or less?**	Yes ▶	CHECK intermittent symptom. REPRODUCE symptom by wiggling affected wiring and connectors.
		No ▶	REPLACE power door lock actuator. RETEST system.

PINPOINT TEST B: ALL DOOR LOCKS INOPERATIVE

Test Step		Result ▶	Action to Take
B1	CHECK SUPPLY TO LOCK SWITCH		
	• Partially remove left door lock switch connector C505. • Using voltmeter, check Circuit 171 (BK/W), Pin 3 at switch connector C505 for voltage. • **Is battery voltage present?**	Yes ▶ No ▶	GO to **B4**. GO to **B2**.
B2	CHECK CIRCUIT 171 (BK/W) FOR OPEN		
	• Disconnect circuit breaker (20A) at primary junction block. • Disconnect left door lock switch connector C505. • Using an ohmmeter, check resistance of Circuit 171 (BK/W) from door lock switch connector C505 to output side of SEAT/LOCK circuit breaker (20A) cavity. • **Is resistance 5 ohms or less?**	Yes ▶ No ▶	GO to **B3**. SERVICE Circuit 171 (BK/W) for open. RETEST system.
B3	CHECK CIRCUIT 171 (BK/W) FOR SHORT		
	• Using ohmmeter connected to a known good ground, connect second lead to Circuit 171 (BK/W) at door lock switch connector C505. • Measure resistance. • **Is resistance 5 ohms or less?**	Yes ▶ No ▶	SERVICE Circuit 171 (BK/W) for short. RETEST system. REPLACE circuit breaker (20A). RETEST system.
B4	CHECK CIRCUIT 57 (BK)		
	• Using an ohmmeter connected to a known good ground, connect second lead to Circuit 57 (BK), Pins 1 and 5 at door lock switch connector C505. • Measure resistance from each pin. • **Is resistance 5 ohms or less?**	Yes ▶ No ▶	GO to **B5**. SERVICE Circuit 57 (BK) for open. RETEST system.
B5	CHECK DOOR LOCK SWITCH LOCK OUTPUT		
	• Partially remove RH door lock switch connector C603. • Using a voltmeter, check Circuit 117 (PK/BK) at switch connector C603, Pin 4 for voltage as switch is actuated to the lock position. • **Is battery voltage present?**	Yes ▶ No ▶	GO to **B6**. REPLACE RH door lock switch. RETEST system.
B6	CHECK DOOR LOCK SWITCH UNLOCK OUTPUT		
	• Disconnect voltmeter lead from Circuit 117 (PK/BK). • Connect lead to Circuit 118 (PK/O), Pin 2 at switch connector C603. • Measure voltage as switch is actuated to unlock position. • **Is battery voltage present?**	Yes ▶ No ▶	GO to **B7**. REPLACE RH door lock switch. RETEST system.
B7	CHECK CIRCUIT 117 (PK/BK)		
	• Gain access to RH door lock actuator. Refer to Actuator, Power Door Lock, in the Removal and Installation portion of this section. • Disconnect door lock actuator. • Using a test lamp, check for voltage at Circuit 117 (PK/BK) in harness connector as switch is actuated to the lock position. • **Did test lamp illuminate?**	Yes ▶ No ▶	SERVICE Circuit 118 (PK/O) for open circuit. RETEST system. SERVICE Circuit 117 (PK/BK) for open circuit. RETEST system.

Official Licensed Product

DIAGNOSIS AND TESTING (Continued)

PINPOINT TEST C: ALL LOCKS OPERATE FROM ONE SWITCH ONLY

Test Step		Result ▶	Action to Take
C1	CHECK SUSPECT SWITCH		
	• Remove suspect switch. • Perform switch test. Refer to Switch, Door Lock under Component Tests in the Diagnosis and Testing portion of this section. • **Did switch test OK?**	Yes ▶ No ▶	GO to **C2**. REPLACE door lock switch. RETEST system.
C2	CHECK SUPPLY TO SWITCH		
	• Using a test lamp, check Circuit 171 (BK/W) at Pin 3 for LH switch or Pin 3 for RH switch for voltage. • **Did test lamp illuminate?**	Yes ▶ No ▶	GO to **C3**. SERVICE Circuit 171 (BK/W) for open. RETEST system.
C3	CHECK CIRCUIT 119 (PK/Y)		
	• Remove opposite door lock switch. • Using an ohmmeter, check Circuit 119 (PK/Y) from LH door lock switch connector C505, Pin 2 to RH door lock switch connector C603, Pin 5 for continuity. • **Is continuity present?**	Yes ▶ No ▶	GO to **C4**. SERVICE Circuit 119 (PK/Y) for open. RETEST system.
C4	CHECK CIRCUIT 120 (PK/LG)		
	• Using ohmmeter, check Circuit 120 (PK/LG) from LH door lock switch connector C505, Pin 4 to RH door lock switch connector C603, Pin 1 for continuity. • **Is continuity present?**	Yes ▶ No ▶	CHECK intermittent symptom. REPRODUCE symptom by wiggling affected wiring and connectors. SERVICE Circuit 120 (PK/LG) for open. RETEST system.

Official Licensed Product
Ford Motor Company

PINPOINT TEST D: DOOR LOCKS OPERATE ONE WAY ONLY

Test Step		Result ▶	Action to Take
D1	CHECK LOCK OPERATION		
	• Actuate either power door lock switch to the lock position. • **Did the doors lock?**	Yes ▶ No ▶	GO to **D2**. GO to **D5**.
D2	CHECK CIRCUIT 118 (PK/O) FOR SHORT TO GROUND		
	• Disconnect RH door lock switch. • Using Rotunda 73 Digital Multimeter 105-R0051 or equivalent, check for continuity between Circuit 118 (PK/O) and known good ground. • **Is continuity present?**	Yes ▶ No ▶	SERVICE Circuit 118 (PK/O) for short to ground. RETEST system. GO to **D3**.
D3	CHECK CIRCUIT 120 (PK/LG) FOR SHORT TO GROUND		
	• Leaving RH door lock switch disconnected, disconnect LH door lock switch. • Using multimeter, check for continuity between Circuit 120 (PK/LG) and known good ground. • **Is continuity present?**	Yes ▶ No ▶	SERVICE Circuit 120 (PK/LG) for short to ground. RETEST system. GO to **D4**.
D4	CHECK CIRCUIT 57 (BK) FOR CONTINUITY		
	• Using multimeter, check for continuity at LH door lock switch connector C505, Circuit 57 (BK) between Pins 1 and 5, and known good ground. • **Is continuity present?**	Yes ▶ No ▶	REPLACE LH door lock switch. RETEST system. SERVICE Circuit 57 (BK) for open. RETEST system.
D5	CHECK CIRCUIT 117 (PK/BK) FOR SHORT TO GROUND		
	• Perform Step D2, substituting Circuit 117 (PK/BK) for Circuit 118 (PK/O). • **Is continuity present?**	Yes ▶ No ▶	SERVICE Circuit 117 (PK/BK) for short to ground. RETEST system. GO to **D6**.
D6	CHECK CIRCUIT 119 (PK/Y) FOR SHORT TO GROUND		
	• Perform Step D3, substituting Circuit 119 (PK/Y) for Circuit 120 (PK/LG). • **Is continuity present?**	Yes ▶ No ▶	SERVICE Circuit 119 (PK/Y) for short to ground. RETEST system. GO to **D4**.

DIAGNOSIS AND TESTING (Continued)

PINPOINT TEST E: DOOR LOCKS WORK INTERMITTENTLY

Test Step		Result	Action to Take
E1	CHECK CONNECTORS		
	• Access lock switches. • Check connectors for corrosion and tightness. • **Are connectors OK?**	Yes ▶ No ▶	GO to **E2.** SERVICE as required. RETEST system.
E2	CHECK GROUND CIRCUIT AT RH SWITCH		
	• Using an ohmmeter connected to a known good ground, connect second lead to Circuit 57 (BK) at Pin 1 and Pin 5 on left door lock switch connector C505. • Measure resistance from each pin. • **Is resistance 5 ohms or less?**	Yes ▶ No ▶	REFER to Door Lock Switch under Component Tests in the Diagnosis and Testing portion of this section. SERVICE as required. SERVICE Circuit 57 (BK) for open circuit. RETEST system.

Component Tests

Switch, Door Lock

NOTE: Remove door lock switch from the vehicle. The raised portion of the switch knob should face right, exposing the five terminals.

1. Use a self-powered test lamp or an ohmmeter to test the power door lock switch.
2. With the door lock switch in the neutral position, there should be continuity between terminals 1 and 2, and between terminals 3 and 4. Terminal 5 should be disconnected from all other terminals.
3. When the raised portion of the switch rocker knob is pushed (lock position), there should be continuity between terminals 1 and 5, and between terminals 3 and 4. Terminal 2 should be disconnected from all other terminals.
4. When the depressed portion of the switch rocker knob is pressed (unlock position), there should be continuity between terminals 1 and 2, and between terminals 4 and 5. Terminal 3 should be disconnected from all other terminals.
5. If the door lock switch does not test as stated, replace the door lock switch.

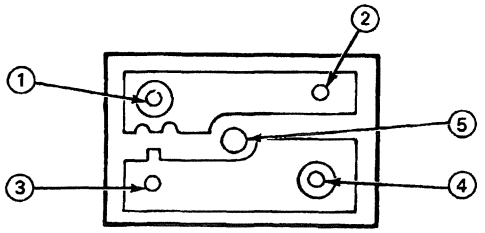

N6079-1B

DOOR LOCK SWITCH TEST CHART

To Test	Connect Self-Powered Test Light or Ohmmeter to Terminals	Move Switch to These Positions	A Good Switch Will Indicate
Power and Ground Checks Before Any Other Tests	3 and 1 or 5	Door Lock Switch (All Positions)	Open Circuit
Power and Ground Checks Before Any Other Tests	1 and 4 or 2 and 5	Door Lock Switch (At Rest)	Closed Circuit
Door Lock Switch	3 and 4	Lock	Closed Circuit
Door Lock Switch	3 and 2	Unlock	Closed Circuit

There is no relay test. Power is supplied directly to the power door lock actuator through the door lock switch located in front door trim panel (23942).

Actuator, Power, Door Lock

Apply 12 volts directly to one terminal of power door lock actuator connector and ground the other terminal. The power door lock actuator should finish its travel in less than one second. Reverse polarity for opposite travel.

Using Rotunda 73 Digital Multimeter 105-R0051 or equivalent, the actuator current draw (stall test) should not exceed 6.2 amps. Reverse the power and ground leads to the connector and repeat test.

REMOVAL AND INSTALLATION

Door Handle/Latch Assembly

NOTE: Due to the conversion from single 90-degree rod end shape to double 90-degree rod end shape, it may be necessary to remove more parts than the instructions indicate. This action will allow more maneuverability of the rod and ease the removal process.

Latch, Door, Front

Removal

1. Remove the front door trim panel (23942) and front door trim shield (237A04) from the door. Refer to Section 01-05.
2. Disconnect cables or rods from inside door handle (22600) and door lock cylinder (21985), if necessary, and front door latch actuating rod (22152) from front door latch remote control and link (21818).
3. Remove the latch assembly attaching screws.
4. Remove door latch.

Installation

1. NOTE: Attach double 90-degree rods and cable to latch before latch installation.

   Follow removal procedure in reverse order.

Official Licensed Product
Ford Motor Company

REMOVAL AND INSTALLATION (Continued)

Door, Front

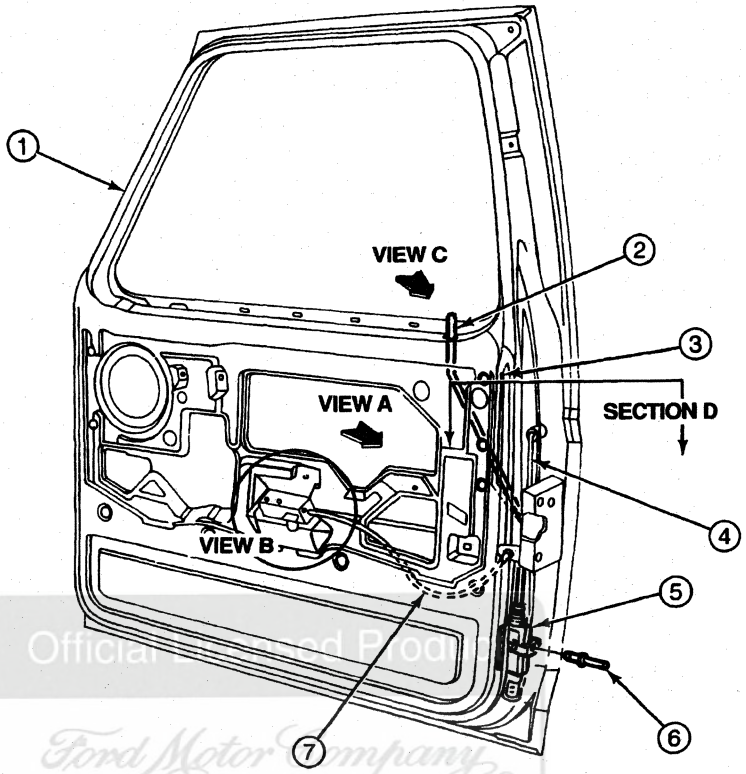

Official Licensed Product
Ford Motor Company

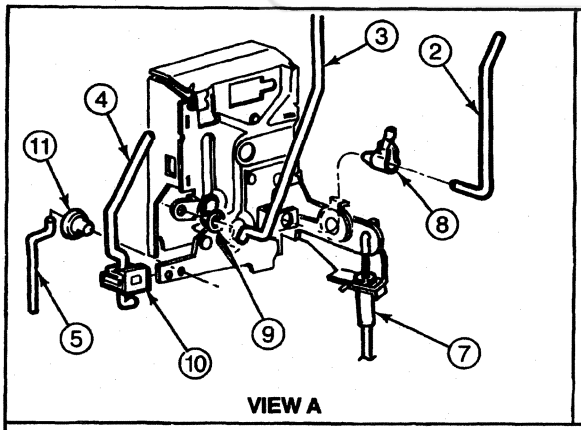

VIEW A

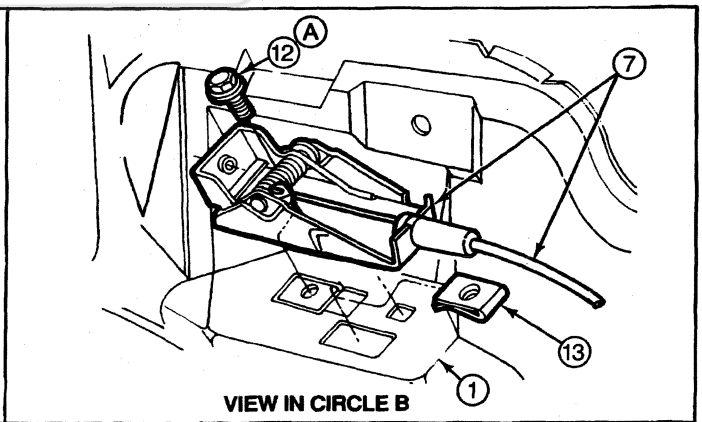

VIEW IN CIRCLE B

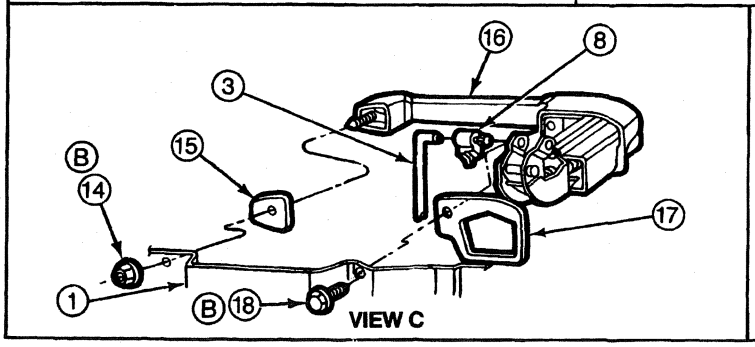

VIEW C

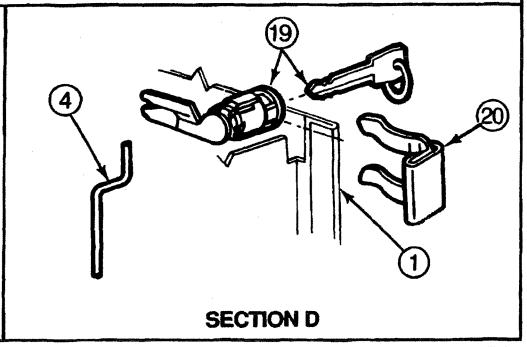

SECTION D

N4607-P

REMOVAL AND INSTALLATION (Continued)

Item	Part Number	Description
1	20124	Front Door
2	21852	Front Door Latch Push Button Rod
3	22152	Front Door Latch Actuating Rod
4	22134	Front Door Latch Control Cylinder Rod
5	218A42	Power Door Lock Actuator
6	W701566-S417	Rivet
7	21818	Front Door Latch Remote Control and Link
8	389760-S	Clip
9	386656-S	Bushing
10	219A36	Retainer
11	391564-S	Bushing

(Continued)

Item	Part Number	Description
12	N800510-S100	Screw and Washer
13	N623332-S100	Nut
14	N806046-S301	Nut and Washer
15	22448	Pad
16	22404	Door Handle
17	22428	Outside Door Handle Large Pad
18	N811306-S3	Screw and Washer
19	21985	Door Lock Cylinder
20	220A96	Retainer
A	—	Tighten to 9-14 N·m (80-124 Lb-In)
B	—	Tighten to 7-11 N·m (62-97 Lb-In)

Latch, Door, Rear, Crew Cab

Removal

1. Put window in the full up position.
2. Remove rear door trim panel (27406) and watershield from rear door. Refer to Section 01-05.
3. Remove screw attaching front door latch remote control and link (21818) to rear door latch remote control support bracket.
4. Disconnect rear door remote control from rear door latch remote control link.
5. Disconnect rear door latch remote actuator link from rear door latch (26412).
6. Disconnect rear door latch control rod link from rear door latch.
7. Disconnect rear door latch actuating rod (26596) from door handle (22404) clip.
8. Remove three screws attaching rear door latch to rear door.
9. Remove rear door latch from rear door.

Installation

1. NOTE: Attach double 90-degree rods to rear door latch before latch installation.

   Follow removal procedure in reverse order.
2. Tighten rear door latch screws to 4-8 N·m (35-71 lb-in).
3. Tighten front door latch remote control and link screw to 9-14 N·m (80-124 lb-in).

Official Licensed Product Motorcraft

REMOVAL AND INSTALLATION (Continued)

Door, Rear, Crew Cab

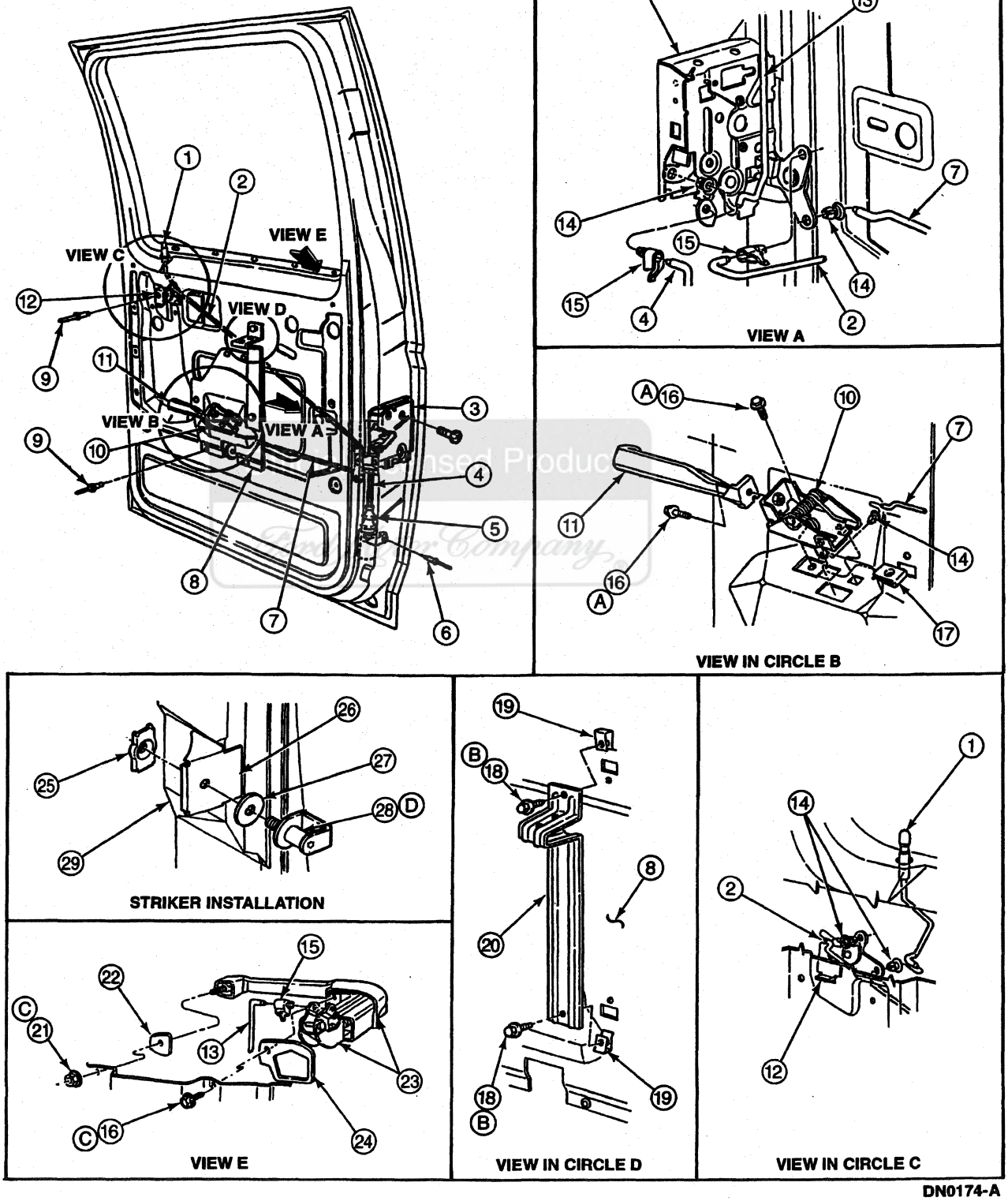

REMOVAL AND INSTALLATION (Continued)

Item	Part Number	Description
1	264A80	Rear Door Latch Push Button Rod
2	26408	Rear Door Latch Control Rod Link
3	26412	Rear Door Latch
4	—	Rear Door Latch Remote Actuator Link (Part of 26594)
5	26594	Rear Door Electric Latch Actuator
6	388047-S101	Rivet
7	26442	Rear Door Latch Remote Control Link
8	26592	Rear Door Latch Remote Control Support Bracket
9	385189-S100	Rivet
10	1021818	Rear Door Latch Remote Control and Link
11	22600	Inside Door Handle
12	26448	Rear Door Latch Bellcrank
13	26596	Rear Door Latch Actuating Rod
14	386656-S	Bushing
15	389760-S	Clip
16	N800527-S100	Screw and Washer Assy
17	N623332-S100	Spring Nut

(Continued)

Item	Part Number	Description
18	N610939-S2	Screw and Washer Assy
19	N802539-S100	Spring Nut
20	24022	Door Arm Rear Support Assy
21	N621906-S2	Nut and Washer Assy
22	22448	Outside Door Handle Small Pad
23	22404	Door Handle, Outside
24	22428	Outside Door Handle Large Pad
25	22024	Door Latch Striker Tapping Plate
26	—	Striker Support Bracket (Part of 24357)
27	N805584-S	Washer
28	22008	Door Latch Striker Plate
29	24357	Center Body Pillar Inside Upper Finish Panel
A	—	Tighten to 9-14 N·m (80-124 Lb-In)
B	—	Tighten to 1-2 N·m (9-18 Lb-In)
C	—	Tighten to 7-11 N·m (62-97 Lb-In)
D	—	Tighten to 35-45 N·m (26-33 Lb-Ft)

Official Licensed Product

Remote Control Assembly, Door Latch, Rear, Crew Cab

Removal

1. Remove two screws retaining arm rest (24140) to window regulator handle (23342). Remove screw retaining rear door trim panel (27406).
2. Remove inside door handle cup (22634).
3. Remove rear door trim panel and watershield, if so equipped. Refer to Section 01-05.
4. Push tabs on remote control assembly together and slide assembly forward.
5. Disconnect link rod from remote control assembly by rotating remote control clockwise. Remove remote control assembly from door.

Installation

1. Follow removal procedure in reverse order.

Remote Control Link, Door Latch, Front

Removal

1. Remove the front door trim panel (23942) and front door trim shield (237A04). Refer to Section 01-05.
2. Remove the screws attaching the front door latch remote control and link (21818) to door inner panel. Remove the front door latch remote control and link.
3. Disconnect the front door latch control cylinder rod (22134) from front door latch remote control and link.

Installation

1. Follow removal procedure in reverse order.

Lock Cylinder, Door

NOTE: When a door lock cylinder (21985) is replaced, both door lock cylinders should be replaced in a set. This will eliminate carrying an extra key which will fit only one lock. If a key is to be replaced, the new key code number is stamped on a metal tag attached to the key.

Removal

1. Roll the window up.
2. Remove access hole cover or front door trim panel (23942) and pull away watershield, if equipped. Refer to Section 01-05.

REMOVAL AND INSTALLATION (Continued)

3. Disconnect the front door latch actuating rod (22152) from the lock door latch operating lever.
4. Slide the lock cylinder retainer away from the door lock cylinder.
5. Remove the door lock cylinder.

Installation

1. Follow removal procedure in reverse order.

Actuator, Power Door Lock

Removal

1. Remove front door trim panel (23942). Refer to Section 01-05.
2. Drill out power door lock actuator (218A42) retaining pop rivet.
3. Disconnect wire harness connector on power door lock actuator.
4. Disconnect latch lock rod from power door lock actuator.
5. Remove power door lock actuator.

Installation

1. Follow removal procedure in reverse order.

Door Lock Actuator and Control Switch Wiring

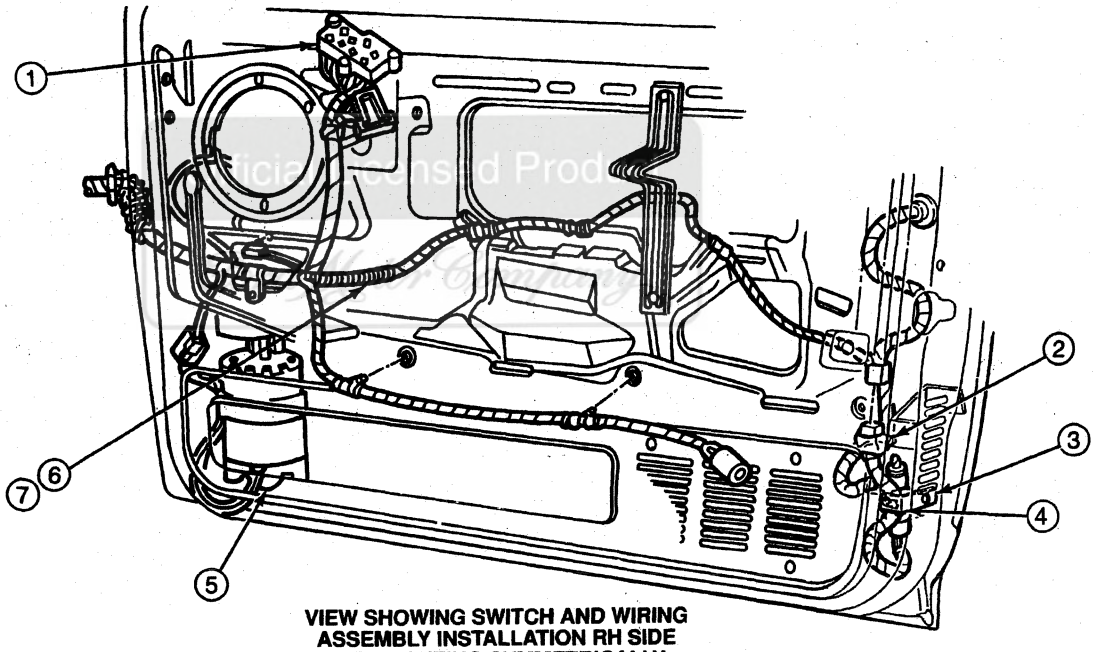

VIEW SHOWING SWITCH AND WIRING ASSEMBLY INSTALLATION RH SIDE WITH ROUTING SYMMETRICALLY OPPOSITE FOR LH SIDE

N9852-D

Item	Part Number	Description
1	—	Window Regulator and Door Lock Control Switch Connector Part of 14A509 (LH) 14529 (RH)
2	—	Door Disarm Pigtail Part of 14A509 (LH) 14529 (RH)

(Continued)

Item	Part Number	Description
3	218A42	Power Door Lock Actuator
4	—	Wiring Harness Locator Hole
5	23394	Window Regulator Electric Drive
6	14A509	Wiring Assy (LH)
7	14529	Wiring Assy (RH)

REMOVAL AND INSTALLATION (Continued)

Control Switch, Door Lock

Removal

1. Remove retaining screw from window regulator switch housing (14527).
2. Insert a small thin-bladed screwdriver into spring tab slots, located at front and rear of window regulator switch housing.
3. Apply pressure on screwdriver to pop window regulator switch housing from front door trim panel (23942).
4. Remove three connector attaching screws (two for Crew Cab left front door) from window regulator switch housing.
5. Remove door lock switch (14028). Carefully pry door lock switch from connector pins with a small screwdriver.

Installation

1. NOTE: The door lock switch is keyed to connector and can only be installed one way.

   Follow removal procedure in reverse order.

Handle, Inside Door, Front and Rear

Removal

1. Remove one screw and remove inside door handle (22600).

Installation

1. Position inside door handle on front door latch remote control and link (21818) and secure with screw.

Handle, Outside Door, Front

Removal

1. Remove the front door trim panel (23942) and front door trim shield (237A04) from the front door (20124). Refer to Section 01-05.
2. Disconnect the front door latch actuating rod (22152) from the handle link connector.
3. Remove one nut and screw.
4. Remove handle and pads from door.

Installation

1. Follow removal procedure in reverse order.

Release Control Assembly, Tailgate

Removal

1. Remove tailgate inside panel cover retaining screws. Remove panel.
2. Disconnect two tailgate latch release links from tailgate latch remote control (43170).
3. If removing handle and tailgate latch remote control, remove two nut and washer assemblies to tailgate outside panel (40710).
4. Remove screws attaching tailgate latch bracket (431D76).
5. Remove by sliding out link of tailgate.
6. Remove link from tailgate latch bracket.
7. Remove screw retaining tailgate support cable to tailgate latch bracket. Remove cable.

Installation

1. NOTE: Prior to installation, take out the slack in links and latches by pulling link to center of tailgate. Close plastic clip over closest thread of link.

   Follow removal procedure in reverse order.

Official Licensed Product Ford Motor Company

REMOVAL AND INSTALLATION (Continued)

Tailgate

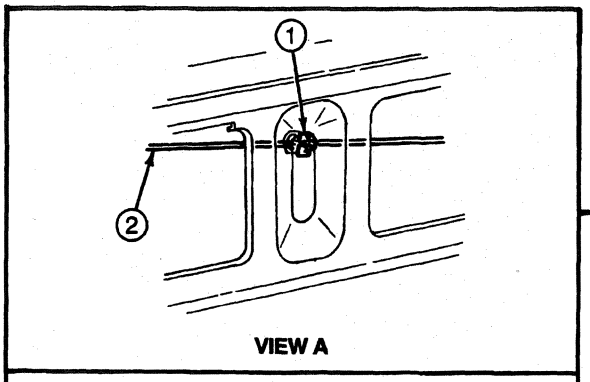

VIEW A

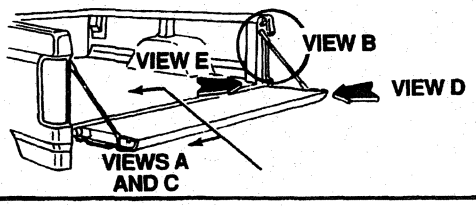

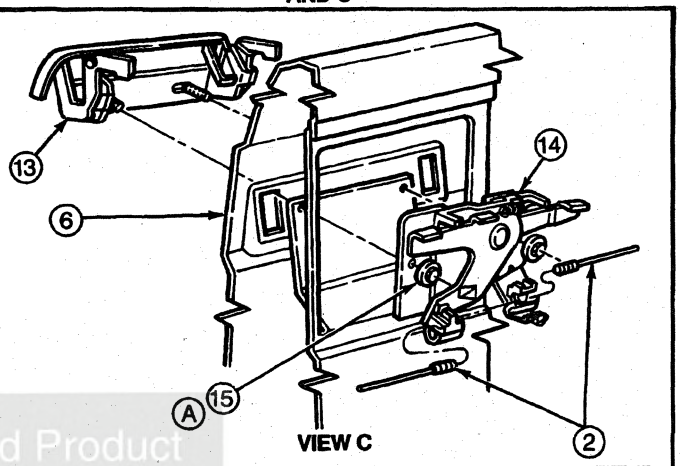

VIEW C

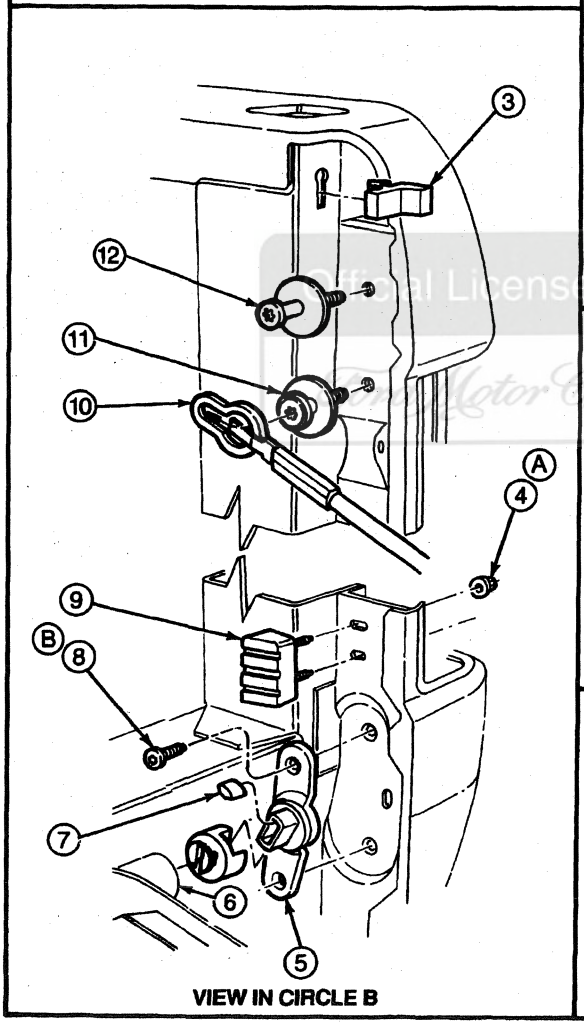

VIEW IN CIRCLE B

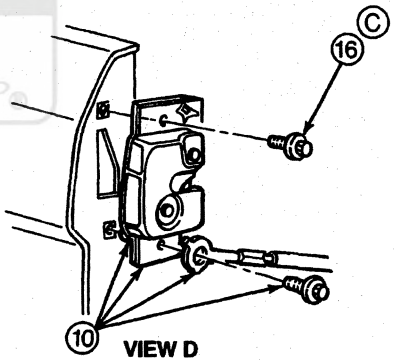

VIEW D

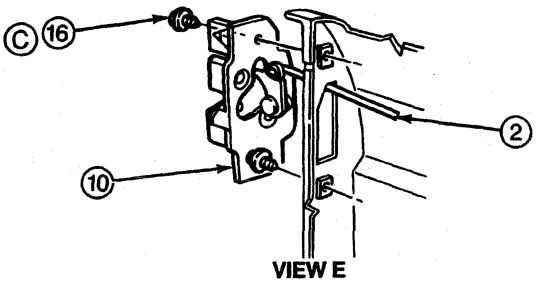

VIEW E

N11177-C

Item	Part Number	Description
1	N805996-S	Clip
2	43868	Tailgate Latch Release Link
3	44482	Tailgate Support Retaining Bumper

(Continued)

Item	Part Number	Description
4	N621906-S54	Nut and Washer Assy
5	430B38	Tailgate Hinge Roller
6	40700	Tailgate
7	430B44	Tailgate Hinge Roller Insert

(Continued)

Official Licensed Product Ford Motor Company

REMOVAL AND INSTALLATION (Continued)

Item	Part Number	Description
8	N804563-S100	Screw
9	439A00	Tailgate Bumper
10	431D76	Tailgate Latch Bracket
11	N805156-S39	Screw and Washer
12	432A06	Striker
13	431C62	Tailgate Latch Release Handle
14	43170	Tailgate Latch Remote Control

(Continued)

Item	Part Number	Description
15	N620480-S36	Nut and Washer
16	N808267-S100	Screw and Washer
A	—	Tighten to 9-14 N·m (80-124 Lb-In)
B	—	Tighten to 35-55 N·m (26-41 Lb-Ft)
C	—	Tighten to 25-34 N·m (18-25 Lb-Ft)

ADJUSTMENTS

Striker, Door Latch

1. **CAUTION: Do not cover up a poor door alignment with a latch striker adjustment.**

   NOTE: The striker pin can be adjusted laterally and vertically as well as fore and aft. The latch striker should not be adjusted to correct door sag. The latch striker should be shimmed to get the clearance shown between the latch striker and the latch. To check this clearance:

   Clean the latch jaws and the striker area.
2. Apply a thin layer of dark grease such as Premium Long-Life Grease XG-1-C or -K or equivalent meeting Ford specification ESA-M1C75-B to the latch striker.
3. As the door is closed and opened, a measurable pattern will result.
4. Move the striker assembly laterally to provide a flush fit with the door and body. Do not use more than two shims.
5. Using Torx® Drive Bit No. 50 D79P-2100-T50 or equivalent, tighten striker to 35-45 N·m (26-33 lb-ft).

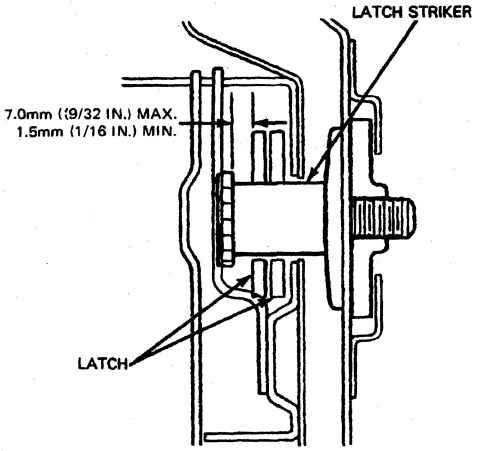

P1169-1C

SPECIFICATIONS

TORQUE SPECIFICATIONS

Description	N·m	Lb-Ft	Lb-In
Front and Rear Door Strikers	35-45	26-33	—
Remote Control Assembly Screw/Washer, Front Door	9-14	—	80-124
Front Door, Rear Door and Tailgate Remote Control Screws	9-14	—	80-124
Tailgate Latch Bracket Screw	25-34	18-25	—
Rear Door Armrest Support Bracket Screws	1-2	—	9-18
Front and Rear Outside Door Handle Screw and Nut	7-11	—	62-97
Tailgate Hinge Roller Screw	35-55	26-41	—
Rear Door Latch Screw	4-8	—	35-71
Tailgate Bumper Nut and Washer	9-14	—	80-124

LUBRICANT/ADHESIVE/CLEANER SPECIFICATIONS

Description	Part Number	Ford Specification
Premium Long-Life Grease	XG-1-C or -K	ESA-M1C75-B
Multi-Purpose Grease Spray	D7AZ-19584-AA	ESR-M1C159-A
Penetrating Lubricant	E8AZ-19A501-B	ESB-M2C20-A

SPECIAL SERVICE TOOLS/EQUIPMENT

SPECIAL SERVICE TOOLS DESIRED

Tool Number	Description
D79P-2100-T50	Torx® Drive Bit No. 50

ROTUNDA EQUIPMENT

Model	Description
105-R0051	73 Digital Multimeter

SECTION 01-14B Door Lock Control System, Electronic

SUBJECT	PAGE
VEHICLE APPLICATION	01-14B-1
DESCRIPTION AND OPERATION	
Battery Saver	01-14B-2
Door Lock Control System, Electronic	01-14B-1
Inputs and Outputs	01-14B-2
Programming, Electronic Door Lock Control System	01-14B-2
Transmitter, Keyless Entry Remote	01-14B-2
DIAGNOSIS AND TESTING	
Electrical Schematic Reference(s)	01-14B-3
Electronic Door Lock System	01-14B-3
DIAGNOSIS AND TESTING (Cont'd.)	
Inspection and Verification	01-14B-3
Pinpoint Tests	01-14B-4
Symptom Chart	01-14B-3
REMOVAL AND INSTALLATION	
Antenna	01-14B-12
Remote Entry Receiver Module	01-14B-11
Transmitter Battery	01-14B-12
SPECIFICATIONS	01-14B-12
SPECIAL SERVICE TOOLS/EQUIPMENT	01-14B-12

VEHICLE APPLICATION

F-250 Heavy Duty, F-350 and F-Super Duty

DESCRIPTION AND OPERATION

Ford Motor Company Proprietary Licensed Product

Door Lock Control System, Electronic

The electronic door lock control system has three main components: the remote entry receiver module, located behind the quarter trim panel (31012), the antenna and the three-button (hand-held) transmitter.

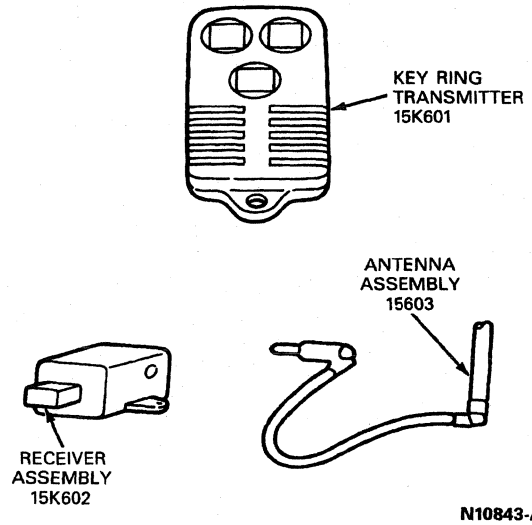

DESCRIPTION AND OPERATION (Continued)

Inputs and Outputs

The remote entry receiver module receives inputs from the following:

- ignition switch (11572)
- front door lock switch (14017)
- lamp switch (13713)
- door open warning lamp switch (14018)
- program connector
- transmitter(s)

The module distributes output to the following:

- interior lamps (13776)
- power door lock actuator (218A42)
- horn relay and bracket (13853)
- parking lamps

Transmitter, Keyless Entry Remote

The transmitter is reprogrammable. All transmitters for the vehicle should be set at the same time. One transmitter is essential for troubleshooting the system.

The remote entry receiver module performs the following functions:

- unlocks driver's front door (20124)
- unlocks all front doors and rear doors (24630)
- locks all front doors and rear doors
- turns on interior lamps (13776) and keyhole illumination when using the transmitter
- activates and deactivates security feature which sounds horn (13832) and flashes parking lamps (13201)
- activates battery saver feature which removes power from interior lamps 45 minutes after last input to remote entry receiver module

Programming, Electronic Door Lock Control System

NOTE: The remote entry features will not function when the key is in the RUN or ACCESSORY position.

To unlock the driver's door, press the UNLOCK button on the transmitter (which is programmed into the remote entry receiver module) once. This will also disarm the anti-theft system, if so equipped.

To unlock all doors, press the UNLOCK button on the transmitter twice. The second depression must be within five seconds of the first UNLOCK depression.

If more than five seconds have elapsed since the first depression of the UNLOCK button, pressing the UNLOCK button again will only unlock the driver door.

To turn on interior lamps (13776), press either UNLOCK or PANIC.

To lock all doors, press the LOCK button on the transmitter once.

To confirm that doors have locked, press LOCK button again, within five seconds of the first depression. This will beep the horn (13832), flash the parking lamps and lock all doors again.

To activate the personal security alarm, press the red PANIC button. The horn will beep and parking lamps (13201) will flash for a maximum of two minutes, forty-five seconds.

To deactivate the personal security alarm, press the red PANIC button again or turn the ignition switch (11572) ON.

NOTE: The remote entry receiver module erases all previous transmitters from memory when the transmitters are programmed or reprogrammed. The remote entry receiver module can store up to four transmitters in memory.

To program (or reprogram) transmitter(s) into the remote entry receiver module, perform the following steps:

1. Turn key to the ON or ON / ACCESSORY position and momentarily short the two terminals of the program connector (C4) (a two-pin connector taped to the wire assembly connected to the remote entry receiver module, approximately 6 inches from the remote entry receiver module). All doors should lock then unlock. Remove shorting pin.
2. Press any button on transmitter. All doors should lock then unlock to verify that the transmitter has been programmed. If door locks do not respond, press button again (up to three times maximum with the same transmitter).
3. Repeat Step 2 to program additional transmitters into the remote entry receiver module (up to four transmitters maximum).
4. Key off. All doors should lock then unlock.
5. Check operation.

Battery Saver

The remote entry receiver module includes a battery saver relay that supplies power to the interior lamps (13776) Circuit 705 (LG / O) and Circuit 53 (BK / LB) when active. When the battery saver relay deactivates, power is cut off to these interior lamps.

The battery saver relay is activated anytime the remote entry receiver module receives an input signal. This relay deactivates 45 minutes after the last input to the remote entry receiver module.

NOTE: The battery saver relay does NOT control power to the headlamp bulbs (13007).

Official Licensed Product
Ford Motor Company

DIAGNOSIS AND TESTING

Electrical Schematic Reference(s)

Refer to Electrical and Vacuum Troubleshooting Manual, Cell 111, Keyless Entry for schematic and connector information.

Electronic Door Lock System

Inspection and Verification

Before proceeding with diagnosis and service of the remote entry electrical operation, check for mechanical binds in the power door lock actuators (218A42). Operate all power door lock actuators several times and check operation. Also be sure the battery is fully charged.

The following diagnosis procedures begin with an explanation page on how to use the procedures. Read this carefully before beginning diagnosis. Refer to the following diagrams and charts for additional information when performing the diagnostic tests.

To test and service remote entry system:

- check that battery is fully charged (if not, it may be causing the concern).

NOTE: When the battery (10655) has been disconnected and reconnected, some abnormal drive symptoms may occur while the powertrain control module (PCM)(12A650) relearns its adaptive strategy. The vehicle may need to be driven 16 km (10 miles) or more to relearn the strategy.

- Disconnect and reconnect battery to make sure system is reset.
- Service only as specified in the tests.

Symptom Chart

Refer to the Electrical and Vacuum Troubleshooting Manual for the connector numbers in the pinpoint tests.

Official Licensed Product

ELECTRONIC DOOR LOCK SYSTEM

Condition	Possible Source	Action
• Interior Lamps Do Not Turn On with Remote Entry Functions with Ignition Key Off; They Only Work When a Door Is Opened	• Mechanical condition. • Open / short circuit. • Door lock switch. • Remote keyless entry module.	• GO to Pinpoint Test A.
• Interior Lamps Turn On Only When Door Is Opened from Inside the Vehicle and Ignition Key Off; the Interior Lamps Work with All Other Functions	• Open / short circuit. • Connections.	• GO to Pinpoint Test A.
• None of the Door Locks Work	• Blown fuses. • Open / short circuit. • Mechanical condition. • Remote entry module.	• GO to Pinpoint Test B.
• One or More Locks Do Not Work	• Door lock actuator. • Open / short circuit. • Remote entry module.	• GO to Pinpoint Test C.
• Locks Will Only Lock or Unlock	• Open / short circuit. • Remote entry module. • Door lock switch.	• GO to Pinpoint Test D.
• Antenna Poor Range	• No / improper antenna installation. • Transmitter. • Open circuit.	• GO to Pinpoint Test E.
• Shorting Plug / Transmitter Program Mode	• Shorting plug installed. • Open / short circuit. • Remote entry module.	• GO to Pinpoint Test F.
• Reprogram Transmitter	• Transmitter not entering program mode. • Transmitter. • Remote entry module.	• GO to Pinpoint Test G.
• Parking Lamps Do Not Work with Panic Alarm	• Circuit breaker. • Open / short circuit. • Parking lamp switch.	• GO to Pinpoint Test H.

DIAGNOSIS AND TESTING (Continued)

ELECTRONIC DOOR LOCK SYSTEM (Continued)

Condition	Possible Source	Action
• Horn Always On with Panic Alarm Active	• Remote entry module. • Open / short circuit. • Horn / horn relay. • Horn switch.	• GO to Pinpoint Test J.

NOTE: Use Rotunda 73 Digital Multimeter 105-R0051 and Dwell-Tach-Volt-Ohms Tester 164-R0254 or equivalents to perform electrical pinpoint tests.

Pinpoint Tests

For further information on the power lock system, refer to Section 01-14A.

BEFORE PERFORMING ANY OF THE TESTS IN THIS SECTION, THE BATTERY MUST BE FULLY CHARGED.

CAUTION: Do not replace parts unless test results say they should be replaced.

NOTE: Keep the front door window glass (21410) rolled down during all pinpoint tests to avoid being locked out of the vehicle.

NOTE: To lubricate linkage, use Multi-Purpose Grease Spray D7AZ-19584-AA or equivalent meeting Ford specifications ESR-M1C159-A and ESB-M1C106-B.

- Spray into latch opening
  - — It may be necessary to remove the door trim panel to lubricate the entire latch and linkage system.
- Manually cycle the lock ten times
  - — Check for interference around right latch and all linkages.

Ford Motor Company Licensed Product

PINPOINT TEST A: ILLUMINATED ENTRY

Test Step		Result ▶	Action to Take
A1	CHECK MODULE GROUND		
	• Disconnect remote entry module connectors C241, C242 and C240. • Check continuity to ground at Pin 5 Circuit 875 (BK / LB) of remote entry module connector C241, and at Pins 1 Circuit 57 (BK) and 15 Circuit 57 (BK) of remote entry module connector C240. • **Is continuity present?**	Yes ▶ No ▶	GO to **A2**. SERVICE open in Circuit 57 (BK) of remote entry module connector C240 or Circuit 875 (BK / LB) of remote entry module connector C241.
A2	CHECK POWER AT MODULE		
	• Check voltage at Pin 1 Circuit 54 (LG / Y) of remote entry module connector C241 to ground. • Check voltage at Pin 14 Circuit 171 (BK / W) and Pin 25 Circuit 171 (BR / W) of remote entry module connector C242 to ground. • **Is reading 10 volts or more?**	Yes ▶ No ▶	GO to **A3**. CHECK and REPLACE fuse. SERVICE open or short in Circuit 54 (LG / Y) of remote entry module connector C241 or Circuit 171 (BK / W) of remote entry module connector C242.
A3	CHECK CONTINUITY TO BATTERY SAVER INPUT		
	• Check continuity to Circuit 54 (LG / Y) at Pins 10 and 23 of remote entry module connector C242. • **Is continuity present?**	Yes ▶ No ▶	GO to **A4**. SERVICE open in Circuit 54 (LG / Y).
A4	CHECK BATTERY SAVER INPUT		
	• Reconnect remote entry module connector C242. • Measure voltage between ground and Pins 10 Circuit 54 (LG / Y) and 23 Circuit 54 (LG / Y) of remote entry module connector C242. • **Is voltage greater than 10 volts?**	Yes ▶ No ▶	GO to **A5**. SERVICE short in Circuit 54 (LG / Y).
A5	CHECK BATTERY SAVER OUTPUT		
	• Measure voltage between ground and Pins 11 Circuit 705 (LG / Y) and 12 Circuit 705 (LG / Y) of remote entry module connector C242. • **Is voltage greater than 10 volts?**	Yes ▶ No ▶	GO to **A6**. REPLACE remote entry module.

DIAGNOSIS AND TESTING (Continued)

PINPOINT TEST A: ILLUMINATED ENTRY (Continued)

Test Step		Result	Action to Take
A6	CHECK IGNITION SWITCH INPUT TO MODULE		
	• Check voltage at Pin 6 Circuit 182 (BR/W) of remote entry module connector C241 with ignition switch at RUN position. • **Is reading 10 volts or more at run?**	Yes ▶ No ▶	GO to **A7**. SERVICE open or short in Circuit 182 (BR/W).
A7	CHECK DIMMER SWITCH ON		
	• Measure voltage between Pin 17 Circuit 706 (GY) and ground with all connectors connected and dimmer switch in the ON position (switch closed). • **Is voltage greater then 10 volts?**	Yes ▶ No ▶	GO to **A8**. SERVICE open in Circuit 706 (GY).
A8	CHECK DIMMER SWITCH OFF		
	• Check continuity between Circuit 54 (LG/Y) and Pin 17 Circuit 706 (GY) of remote entry module connector C240, while the turn indicator switch is in the off position (switch open). • **Is continuity present?**	Yes ▶ No ▶	SERVICE shorted turn indicator switch and mounting plate. GO to **A9**.
A9	CHECK LAMP OUTPUT		
	• Place turn indicator switch and mounting plate on. • Measure voltage between Pins 15 Circuit 57 (BK) and 19 Circuit 53 (BK/LB) of remote entry module connector C240. • **Is reading 10 volts or more?**	Yes ▶ No ▶	GO to **A10**. REPLACE remote entry module.
A10	CHECK FOR CONTINUITY AND SHORT		
	• Disconnect remote entry module connector C240. • Check for short between Pin 19 Circuit 53 (BK/LB) and Pin 1 Circuit 57 (BK) and Pin 15 Circuit 57 (BK). • Check for continuity between Pin 19 Circuit 53 (BK/LB) and the suspect lock cylinder connector in door. • **Is continuity present and no short?**	Yes ▶ No ▶	GO to **A11**. SERVICE open/short in Circuit 53 (BK/LB).
A11	CHECK MODULE OUTPUT TO LOCK CYLINDER WHEN TRANSMITTER IS USED		
	• Reconnect remote entry module connector C240. • Attach voltmeter between Pin 19 Circuit 53 (BK/LB) and ground. • Press UNLOCK on a preprogrammed transmitter. • **Is reading 10 volts or more within 15 seconds?**	Yes ▶ No ▶	REPLACE non-functional lock cylinder. GO to **A12**.
A12	CHECK DOOR JAMB SWITCHES		
	• For each door (all others closed): Disconnect remote entry module connectors C242 and C240. Check continuity between Circuit 54 (LG/Y) and Pin 17 Circuit 706 (GY) with the door open and then closed (dimmer switch off in both steps). • **Is continuity present with door(s) open and none with door(s) closed?**	Yes ▶ No ▶	GO to **A13**. REPLACE damaged/worn door jamb switch.
A13	CHECK CONTINUITY		
	• Remove door jamb switch. • Check continuity between Circuit 54 (LG/Y) and Pin 17 Circuit 706 (GY) with the door open and then closed (dimmer switch off in both steps). • **Is continuity present?**	Yes ▶ No ▶	GO to **A14**. SERVICE short in door jamb switch or circuitry.
A14	TURN ON INTERIOR LAMPS WITH JUMPER WIRE		
	• Momentarily connect a jumper wire between Pin 10 Circuit 54 (LG/Y) of remote entry module connector C242 and Pin 19 Circuit 53 (BK/LB) of remote entry module connector C240. • **Do interior lamps come on?**	Yes ▶ No ▶	GO to **A15**. SERVICE short or open in Circuit 54 (LG/Y) or Circuit 53 (BK/LB).
A15	CHECK CONNECTORS		
	• Visually inspect all connectors for loose or corroded parts. • **Are pins loose or corroded?**	Yes ▶ No ▶	SERVICE as required. REPLACE remote entry module.

Ford Licensed Product

DIAGNOSIS AND TESTING (Continued)

PINPOINT TEST B: NONE OF THE DOOR LOCKS WORK

Test Step		Result	Action to Take
B1	CHECK FUSE 6 AND FUSE 8		
	• Check Fuse 6 (15A) and Fuse 8 (15A). • **Are fuses OK?**	Yes ▶ No ▶	GO to **B3**. REPLACE fuse. GO to **B2**.
B2	CHECK FUSE 20 (50A)		
	• Activate the lock and unlock switches. • Check Fuse 20 (50A) in power distribution box. • **Is fuse blown?**	Yes ▶ No ▶	CHECK for short to ground in Circuits 163 (R/O), 118 (PK/O) and 117 (PK/BK) or shorted lock actuator. SERVICE, then REPLACE fuse. GO to **B3**.
B3	POWER TO MODULE		
	• Disconnect remote entry module connectors C241, C242 and C240 from remote entry module. • Check voltage between Pin 14 Circuit 171 (BK/W) and Pin 25 Circuit 171 (BK/W) of remote entry module connector C242 and ground. • Check voltage between Pin 1 Circuit 54 (LG/Y) of remote entry module connector C241 and ground. • **Are 10 or more volts available?**	Yes ▶ No ▶	GO to **B4**. SERVICE open in Circuit 171 (BK/W) or 54 (LG/Y) or CHARGE battery.
B4	CHECK MODULE GROUNDS		
	• Check continuity between Pin 1 Circuit 57 (BK) and Pin 15 Circuit 57 (BK) of remote entry module connector C240 and ground. • Check continuity between Pin 5 Circuit 875 (BK/LB) of remote entry module connector C241 and ground. • **Is continuity present?**	Yes ▶ No ▶	GO to **B5**. SERVICE open in Circuit 57 (BK) of remote entry module connector.
B5	CHECK LOCK ACTUATORS		
	• Reconnect remote entry module connectors C240 and C241. • Manually lock all doors. • Connect a jumper wire between ground and Pin 2 Circuit 117 (PK/BK) of remote entry module connector C240 with remote entry module connector C240 disconnected from the remote entry module. • With a second jumper wire, momentarily connect together Pin 14 Circuit 171 (BK/W) of remote entry module connector C240 and Pin 6 Circuit 118 of remote entry module connector C242. (Only passenger doors should unlock). • Momentarily connect together Pin 14 Circuit 171 (BK/W) of remote entry module connector C242 and Pin 3 Circuit 117 (PK/BK) of remote entry module connector C240. (Driver door should now unlock). • **Do all doors unlock?**	Yes ▶ No ▶	GO to **B6**. For passenger lock(s). SERVICE Circuit 117 (PK/BK), Circuit 118 (PK/O), remote entry module connector C242 or passenger lock motor(s). For driver lock SERVICE Circuit 163 (R/O), Circuit 117 (PK/BK), remote entry module connector C240 or driver lock motor.
B6	CHECK DOOR LOCK SWITCHES		
	NOTE: Door lock(s) may be mechanically stuck. Check door lock switch using meter. • Check if door lock switch is stuck in LOCK or UNLOCK position. • **Does door lock switch work?**	Yes ▶ No ▶	GO to **B7**. REPLACE door lock switch.
B7	CHECK CONTINUITY FOR CIRCUITS 119 (PK/Y) AND 120 (PK/LG)		
	• With driver switch in LOCK, check for continuity between Pin 4 Circuit 119 (PK/Y) and ground. • With driver switch in UNLOCK position, check for continuity between Pin 5 Circuit 120 (PK/LG) and ground. • **Is continuity present?**	Yes ▶ No ▶	GO to **B8**. SERVICE open in Circuit 119 (PK/Y) or Circuit 120 (PK/LG).

Ford Motor Company Official Licensed Product

DIAGNOSIS AND TESTING (Continued)

PINPOINT TEST B: NONE OF THE DOOR LOCKS WORK (Continued)

Test Step		Result ▶	Action to Take
B8	CHECK LOCK SWITCHES FOR SHORT TO GROUND		
	• Disconnect remote entry module connector C240. • Check for short between Pin 4 Circuit 119 (PK/Y) and ground. • Check for short between Pin 5 Circuit 120 (PK/LG) and ground. • **Is a short discovered?**	Yes ▶ No ▶	SERVICE short to ground in Circuit 119 (PK/Y) or Circuit 120 (PK/LG). REPLACE remote entry module.

PINPOINT TEST C: ONE OR MORE LOCKS DO NOT WORK

Test Step		Result ▶	Action to Take
C1	MANUALLY INSPECT LOCKS		
	• Manually cycle the suspect lock(s) several time to check for door latch or linkage binding. • **Does latch or linkage bind?**	Yes ▶ No ▶	LUBRICATE lock and linkage. GO to **C2**.
C2	CHECK VOLTAGE TO ACTUATOR/DOOR LOCK SWITCH		
	• Remove door trim panel from door with suspect actuator. • Check voltage between the suspect lock actuator and ground while operating power door lock switch. • **Is voltage 10 volts or greater?**	Yes ▶ No ▶	GO to **C4**. GO to **C3**.
C3	CHECK MODULE OUTPUT		
	• With all connectors in place, depress lock button and measure voltage at Pin 2 Circuit 117 (PK/BK) and Pin 16 Circuit 117 (PK/BK) of remote entry module connector C240 to ground. • Measure voltage at Pin 3 Circuit 163 (R/O), Pin 6 Circuit 118 (PK/O) and Pin 18 Circuit 118 (PK/O) of remote entry module connector C240 to ground while door lock switch is depressed. • **Is reading 10 volts or more with lock button depressed?**	Yes ▶ No ▶	SERVICE Circuit 163 (R/O), Circuit 117 (PK/BK), Circuit 118 (PK/O), Circuit 119 (PK/Y) or Circuit 120 (PK/LG) for open or short. REPLACE remote entry module.
C4	POWER TO ACTUATOR WITH DOOR LOCK SWITCH IN UNLOCK		
	• Check voltage between suspect lock actuator Circuit 118 (PK/O) and ground while pressing UNLOCK position on door lock switch. • **Is voltage 10 volts or more?**	Yes ▶ No ▶	REPLACE suspect door lock actuator. SERVICE open or short in Circuit 120 (PK/LG), Circuit 119 (PK/Y), Circuit 118 (PK/O) or Circuit 117 (PK/BK).

PINPOINT TEST D: LOCKS WILL ONLY LOCK OR UNLOCK

Test Step		Result ▶	Action to Take
D1	CHECK CONTINUITY OF LOCK/UNLOCK CIRCUITS		
	• Key off. • Disconnect remote entry module connector C240. • Check continuity between Pin 4 Circuit 119 (PK/Y) (use Pin 5 Circuit 120 (PK/LG) if doors will not unlock) of remote entry module connector C240 and ground while pressing the lock (unlock) position of one of the door lock switches. • **Is continuity present?**	Yes ▶ No ▶	GO to **D2**. GO to **D3**.
D2	CHECK OUTPUT FROM MODULE		
	• With all connectors in place, check voltage between Pin 2 Circuit 117 (PK/BK) and Pin 16 Circuit 117 (PK/BK) of remote entry module connector C240 (use Pin 3 Circuit 163 (R/O), Pin 6 Circuit 118 (PK/O) and Pin 18 Circuit 118 (PK/O) for unlock) and ground while pressing the LOCK (UNLOCK) position of one of the door lock switches. • **Is voltage 10 volts or greater?**	Yes ▶ No ▶	SERVICE open or short in Circuit 117 (PK/BK) [Circuit 118 (PK/O) or Circuit 163 (R/O) for unlock]. REPLACE remote entry module.

DIAGNOSIS AND TESTING (Continued)

PINPOINT TEST D: LOCKS WILL ONLY LOCK OR UNLOCK (Continued)

Test Step		Result	Action to Take
D3	CHECK DOOR SWITCH FUNCTION		
	• Check continuity between ground and Circuit 119 (PK/Y) for lock [Circuit 120 (PK/LG) for unlock] connection to door lock switch while pressing the LOCK (UNLOCK) position of door lock switch. • **Is continuity present?**	Yes ▶ No ▶	SERVICE door lock switch. SERVICE break in Circuit 119 (PK/Y) [Circuit 120 (PK/LG) for unlock].

PINPOINT TEST E: ANTENNA POOR RANGE

Test Step		Result	Action to Take
E1	CHECK ANTENNA INSTALLATION		
	• Make sure antenna has been installed properly. • **Is antenna properly installed?**	Yes ▶ No ▶	GO to **E2**. INSTALL missing antenna or REROUTE antenna to proper location.
E2	CHECK ANTENNA/POOR RANGE		
	• Disconnect antenna lead in cable from the module's antenna plug. • Inspect antenna jack for damage, especially to the center pin. • Reconnect antenna (make sure jack is fully seated into module's antenna plug). • **Is antenna OK?**	Yes ▶ No ▶	GO to **E3**. REPLACE antenna.
E3	TRY ANOTHER TRANSMITTER		
	• If more than one transmitter is available, test the response of all transmitters for the vehicle. • If no other transmitters are available, go to Pinpoint Test G. • **Do other transmitters operate properly?**	Yes ▶ No ▶	GO to **E4**. REPLACE damaged/worn transmitter.
E4	CHECK FOR INOPERATIVE SHORTING PLUG		
	• Disconnect remote entry module connector C241 from remote entry receiver module. • Measure continuity between Pin 1 Circuit 808 (W/Y) and Pin 2 Circuit 809 (GY/Y) of remote entry program connector C243. • **Is there continuity?**	Yes ▶ No ▶	REPLACE Connector C4. SERVICE open in Pin 1 Circuit 808 (W/Y) or Pin 2 Circuit 809 (GY/Y).

PINPOINT TEST F: SHORTING PLUG/TRANSMITTER PROGRAM MODE

Test Step		Result	Action to Take
F1	CHECK SHORTING PLUG INSTALLATION		
	• Check that shorting plug is not inserted into remote entry program connector C243. • **Is shorting plug in remote entry program connector C243?**	Yes ▶ No ▶	REMOVE shorting plug from remote entry program connector C243. GO to **F2**.
F2	CHECK PROGRAM "A" SHORT TO GROUND		
	• Disconnect remote entry module connector C241. • Test for continuity between Pin 1 Circuit 808 (W/Y) of remote entry program connector C243 and ground. • **Is continuity present?**	Yes ▶ No ▶	SERVICE short to ground in Circuit 808 (W/Y). GO to **F3**.
F3	CHECK PROGRAM "A" SHORT TO BATTERY		
	• Test for continuity between Pin 1 Circuit 808 (W/Y) of remote entry program connector C243 and battery (remote entry module connector C241 disconnected.) • **Is continuity present?**	Yes ▶ No ▶	SERVICE short to battery in Circuit 808 (W/Y). GO to **F4**.

Official Licensed Product Ford Motor Company

DIAGNOSIS AND TESTING (Continued)

PINPOINT TEST F: SHORTING PLUG/TRANSMITTER PROGRAM MODE (Continued)

Test Step		Result ▶	Action to Take
F4	CHECK PROGRAM "B" SHORT TO GROUND		
	• Test for continuity between Pin 2 Circuit 809 (GY/Y) of remote entry program connector C243 and ground (remote entry module connector C241 disconnected.) • **Is continuity present?**	Yes ▶ No ▶	SERVICE short to ground in Circuit 809 (GY/Y). GO to **F5**.
F5	CHECK PROGRAM "B" SHORT TO BATTERY		
	• Test for continuity between Pin 2 Circuit 809 (GY/Y) of remote entry program connector C243 and battery (remote entry module connector C241 disconnected.) • **Is continuity present?**	Yes ▶ No ▶	SERVICE short to battery in Circuit 809 (GY/Y). GO to **F6**.
F6	CHECK MODULE PROGRAM "A" INPUT		
	• Disconnect remote entry module connector C241. • Measure the voltage between Pin 15 Circuit 808 (W/Y) of remote entry module connector C241 and ground. • **Is voltage between 4 and 6 volts?**	Yes ▶ No ▶	GO to **F7**. REPLACE remote entry module.
F7	CHECK MODULE PROGRAM "B" INPUT		
	• Disconnect remote entry module connector C241. • Measure the continuity between Pin 10 Circuit 809 (GY/Y) of remote entry module connector C241 and ground. • **Is continuity present?**	Yes ▶ No ▶	GO to **F8**. REPLACE remote entry module.
F8	CHECK CONTINUITY OF PROGRAM "A" CIRCUIT		
	• Reconnect remote entry module connector C241. • Measure the voltage between Pin 1 Circuit 808 (W/Y) of remote entry program connector C243 and ground. • **Is voltage between 4 and 6 volts?**	Yes ▶ No ▶	GO to **F9**. SERVICE open in Circuit 808 (W/Y).
F9	CHECK CONTINUITY OF PROGRAM "B" CIRCUIT		
	• Reconnect remote entry module connector C241. • Measure the continuity between Pin 2 Circuit 809 (GY/Y) of remote entry program connector C243 and ground. • **Is continuity present?**	Yes ▶ No ▶	Transmitter program mode OK. SERVICE open in Circuit 809 (GY/Y).

PINPOINT TEST G: REPROGRAM TRANSMITTER

Test Step		Result ▶	Action to Take
G1	CHECK PROGRAMMING OPERATION		
	• Key to RUN. • NOTE: The shorting plug connects Program A input to Program B on the remote entry receiver module. • Insert a shorting plug into remote entry program connector C243, located behind glove compartment, taped to the harness. • **Do doors lock and unlock?**	Yes ▶ No ▶	GO to **G2**. Transmitter not entering program mode. GO to **F1**.
G2	STORE TRANSMITTER(S) INTO MODULE MEMORY		
	• Key to RUN. • Press any button on the transmitter. NOTE: May have to push the button more than once. • Repeat this sequence for each of the transmitter (up to four total). • **For each transmitter stored, do all doors lock then unlock?**	Yes ▶ No ▶	GO to **E3**. GO to **E2**. If E2 has already been performed, REPLACE transmitter batteries and REPEAT step G1. If still no response, REPLACE remote entry module.
G3	EXIT TRANSMITTER PROGRAM MODE		
	• Key off. • Check that shorting plug has been removed from remote entry program connector C243. • **Do doors lock and unlock?**	Yes ▶ No ▶	Remote entry module reprogramming OK. REPLACE remote entry module.

Official Licensed Product

DIAGNOSIS AND TESTING (Continued)

PINPOINT TEST H: PARKING LAMPS DO NOT WORK WITH PANIC ALARM

Test Step		Result ▶	Action to Take
H1	PARKING LAMP OPERATIONAL CHECK		
	• Turn on parking lamps with the headlamp switch, located on the instrument panel. • **Do parking lamps turn on with switch?**	Yes ▶ No ▶	GO to **H2**. GO to **H5**.
H2	CHECK PARKING LAMP OUTPUT CIRCUIT CONTINUITY		
	• Disconnect remote entry module connector C242 and parking lamp connector C1031 (left front parking lamp), parking lamp connector C1032 (right front parking lamp), parking lamp connector C431 (left rear parking lamp) or parking lamp connector C432 (right rear parking lamp). • Test for continuity between Pin 13 Circuit 195 (T/W) of remote entry module connector C242 and terminal on disconnected parking lamp connector. • **Is continuity present?**	Yes ▶ No ▶	GO to **H3**. SERVICE affected parking lamp circuit.
H3	CHECK PARKING LAMP INPUT CIRCUIT CONTINUITY		
	• Disconnect remote entry module connectors C242 and C240. • Test for continuity between Pin 13 Circuit 195 (T/W) of remote entry module connector C242 and Pin 1 Circuit 57 (BK) or Pin 15 Circuit 57 (BK) of remote entry module connector C240. • **Is continuity present?**	Yes ▶ No ▶	GO to **H4**. SERVICE Circuit 57 (BK).
H4	CHECK PARKING LAMPS		
	• Check the parking lamps. Refer to Section 17-01. • **Do parking lamps check OK?**	Yes ▶ No ▶	GO to **H5**. REPLACE or SERVICE the parking lamp circuit.
H5	CHECK OUTPUT CIRCUIT BREAKER		
	• Examine circuit breaker 12 (20A). • **Is circuit breaker 12 (20A) OK?**	Yes ▶ No ▶	SERVICE open or short in Circuit 14 (BR). GO to **H6**. REPLACE circuit breaker.
H6	CHECK LAMP SWITCH ON INSTRUMENT PANEL		
	• Disconnect the lamp switch and remote entry module connector C241. • **Do the parking lamps shut off?**	Yes ▶ No ▶	REPLACE the lamp switch. SERVICE short to battery in Circuit 14 (BR) or SERVICE parking lamp circuitry. REFER to Section 17-01.

PINPOINT TEST J: HORN ALWAYS ON WITH PANIC ALARM ACTIVE

Test Step		Result ▶	Action to Take
J1	HORN ALWAYS ON		
	• Press the horn switch located on the steering wheel. • **Does horn stop when switch is depressed?**	Yes ▶ No ▶	GO to **J2**. GO to **J5**.
J2	ACTIVATE HORN SWITCH HORN BLOW SWITCH		
	• Press the horn blow switch located on the steering wheel. • **Does horn sound when activated?**	Yes ▶ No ▶	GO to **J3**. GO to **J4**.
J3	CHECK HORN CIRCUIT CONTINUITY		
	• Disconnect remote entry module connector C241. • Test for continuity between Pin 26 Circuit 1 (DB) of remote entry module connector C240 and Circuit 6 (Y/LG) (horn relay). • **Is continuity present?**	Yes ▶ No ▶	REPLACE remote entry module. SERVICE Circuit 6 (Y/LG).
J4	CHECK HORN AND HORN RELAY		
	• Check the horn and horn relay. Refer to Section 13-06. • **Do horn and horn relay work?**	Yes ▶ No ▶	GO to **J5**. REPLACE or SERVICE the horn or horn relay.

Official Licensed Product Ford Motor Company

DIAGNOSIS AND TESTING (Continued)

PINPOINT TEST J: HORN ALWAYS ON WITH PANIC ALARM ACTIVE (Continued)

Test Step		Result	Action to Take
J5	CHECK OUTPUT CIRCUIT BREAKER		
	• Examine Fuse 8 (15A) in fuse panel. • **Is fuse OK?**	Yes ▶ No ▶	GO to **J6**. REPLACE fuse or SERVICE open or short in Circuit 6 (Y/LG).
J6	CHECK FOR DAMAGED/WORN MODULE		
	• Disconnect remote entry module connector C241. • **Does the horn shut off?**	Yes ▶ No ▶	REPLACE remote entry module. GO to **J7**.
J7	CHECK HORN BLOW SWITCH ON STEERING WHEEL		
	• Disconnect the horn blow switch and remote entry module connector C242. • **Does the horn shut off?**	Yes ▶ No ▶	REPLACE the horn blow switch. SERVICE short-to-ground in Circuit 1 (DB) or SERVICE the horn relay circuitry. REFER to Section 13-06.

REMOVAL AND INSTALLATION

Remote Entry Receiver Module

The remote entry receiver module is located in the LH side of the lower instrument panel (04320) to the right of the steering column, just above the driver's right foot area.

Removal

1. Disconnect the three electrical connectors and the antenna connectors and the antenna connector from the module.
2. Remove two bolts attaching the module to its support bracket and remove the module.

Installation

1. Follow removal procedures in reverse order.

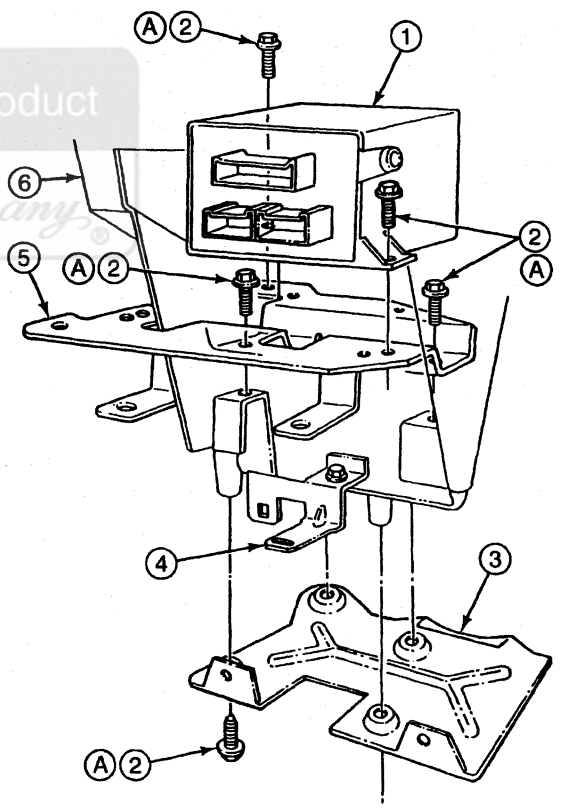

N12725-A

Item	Part Number	Description
1	15K602	Remote Keyless Entry Module
2	N803876-S36	Screw

(Continued)

REMOVAL AND INSTALLATION (Continued)

Item	Part Number	Description
3	18B860	Premium Sound Amp Bracket
4	10D876	Safety Belt Warning Chime Brackets
5	14B058	Air Bag Monitor Bracket
6	04320	Instrument Panel
A	—	Tighten to 4.5-6.3 N·m (40-56 Lb-In)

Antenna

Removal

This vehicle uses a PIA-type antenna. DO NOT remove existing antenna from wire harness. The antenna is taped to the wire harness connected to the remote entry module.

1. Disconnect antenna connector from remote entry receiver module and tape securely out of the way.

Installation

1. Connect new antenna connector to remote entry receiver module.
2. Install new PIA-type antenna into vehicle, taping along wire harness path followed by old (unconnected) PIA antenna. Secure using approved tie-wrap or tape.

Transmitter Battery

CAUTION: Do not take the front half of the transmitter apart.

The remote entry transmitter is powered by two coin-type 3-volt lithium batteries. To replace the batteries, the transmitter comes apart by twisting a thin coin between the two halves of the transmitter.

When installing the new batteries, be sure to place the positive side down as marked. Carefully snap the two halves back together.

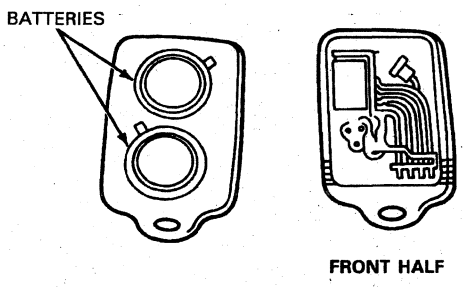

N10847-A

SPECIFICATIONS

TORQUE SPECIFICATIONS

Description	N·m	Lb-In
Remote Keyless Entry Module to Air Bag Monitor Bracket Attaching Screw	4.5-6.3	40-56

LUBRICANT/ADHESIVE/CLEANER SPECIFICATIONS

Description	Part Number	Ford Specification
Multi-Purpose Grease Spray	D7AZ-19584-AA	ESR-M1C159-A and ESB-M1C106-B

SPECIAL SERVICE TOOLS/EQUIPMENT

ROTUNDA EQUIPMENT

Model	Description
105-R0051	73 Digital Multimeter
164-R0254	Dwell-Tach-Volt-Ohms Tester

Official Licensed Product Motor Company

SECTION 01-16 Wiper and Washer Systems

SUBJECT	PAGE
VEHICLE APPLICATION	01-16-1
DIAGNOSIS AND TESTING	
Electrical Schematic Reference(s)	01-16-1
Wiper and Washer Systems	01-16-1
Component Tests	01-16-7
Current Draw — Park Test	01-16-9
Current Draw — Windshield Washer Pump	01-16-8
Current Draw — Windshield Wiper Motor	01-16-9
Inspection and Verification	01-16-1
Symptom Chart	01-16-1
REMOVAL AND INSTALLATION	
Washer Nozzle Jet and Bracket	01-16-13
Washer Pump and Reservoir	01-16-13
Washer System, Windshield, Class A Motorhome Chassis	01-16-15
REMOVAL AND INSTALLATION (Cont'd.)	
Windshield Washer Pump, Seal and Impeller Assembly	01-16-15
Windshield Wiper	01-16-9
Mounting Arm and Pivot Shaft	01-16-9
Pivot Arm	01-16-11
Windshield Wiper Control Module	01-16-12
Wiper Motor	01-16-12
ADJUSTMENTS	
Park Position	01-16-16
Windshield Wiper Arm and Blade Assembly, Class A Motorhome Chassis	01-16-15
Windshield Wiper Pivot Arm and Windshield Wiper Blade	01-16-16
SPECIFICATIONS	01-16-16
SPECIAL SERVICE TOOLS/EQUIPMENT	01-16-16

VEHICLE APPLICATION

F-250 Heavy Duty, F-350, F-Super Duty Chassis Cab and Class A Motorhome

Official Licensed Product
Ford Motor Company

DIAGNOSIS AND TESTING

Electrical Schematic Reference(s)

Refer to Electrical and Vacuum Troubleshooting Manual, Cell 1, Interval Wiper / Washer for schematic and connector information.

Wiper and Washer Systems

Inspection and Verification

1. Verify the vehicle owner's original concern by operating the wiper and washer system to duplicate the vehicle owner's concern.
2. Inspect to determine if one of the following concerns apply.

VISUAL INSPECTION CHART

Mechanical	Electrical
• Windshield wiper blade missing or damaged • Binding windshield wiper pivot arm • Binding windshield wiper mounting arm and pivot shaft • Empty windshield washer reservoir • Kinked or broken windshield washer hoses	• Open 30A fuses (F-250, F-350, F-Super Duty) or 8.25A circuit breaker (Motorhome) • Damaged windshield wiper motor • Damaged windshield washer pump • Open connectors • Corroded connectors • Inoperative windshield wiper switch • Open thermal breaker internal to wiper motor

3. If the concern(s) remains after the inspection, determine the symptom(s) and go to the Symptom Chart.

Symptom Chart

Refer to the Electrical and Vacuum Troubleshooting Manual for the connector numbers in the pinpoint tests.

DIAGNOSIS AND TESTING (Continued)

NOTE: Use Rotunda Digital Volt-Ohmmeter 014-00407 or equivalent to perform electrical pinpoint tests.

WIPER AND WASHER SYSTEMS

Condition	Possible Source	Action
• Windshield Washer Inoperative	• Low fluid level. • Split, loose, pinched or kinked windshield washer hose. • Open in multi-function switch. • Windshield washer pump.	• GO to Pinpoint Test A.
• Windshield Wipers Inoperative — All Switch Positions	• Blown fuse. • Windshield wiper motor. • Multi-function switch. • Bent or damaged windshield wiper motor linkage. • Wiper control module. • Open wire or connector.	• GO to Pinpoint Test B.
• Windshield Wipers Inoperative at High Speed	• Open circuitry / connector. • Multi-function switch. • Wiper control module. • Windshield wiper motor.	• GO to Pinpoint Test C.
• Windshield Wipers Inoperative at Low Speed	• Multi-function switch. • Windshield wiper motor. • Open wiring. • Wiper control module.	• GO to Pinpoint Test D.
• Windshield Wipers Inoperative at Interval Setting	• Turn signal and windshield wiper switch. • Wiper control module. • Open wiring.	• GO to Pinpoint Test E.
• Windshield Wipers Will Not Park at Proper Position	• Windshield wiper motor. • Wiper control module. • Multi-function switch.	• GO to Pinpoint Test F.
• Windshield Wipers Continue to Run When Switch Is Turned Off	• Windshield wiper motor. • Wiper control module. • Multi-function switch.	• GO to Pinpoint Test G.

Pinpoint Tests

PINPOINT TEST A: WINDSHIELD WASHER SYSTEM INOPERATIVE

Test Step		Result ▶	Action to Take
A1	WINDSHIELD WASHERS INOPERATIVE		
	• Check fluid level of windshield washer reservoir. • **Is windshield washer reservoir empty?**	Yes ▶	FILL windshield washer reservoir. RESTORE vehicle. RETEST system.
		No ▶	GO to **A2**.
A2	TURN ON WASHER SWITCH		
	• Key to run, check operation of windshield washer pump. • **Does windshield washer pump run?**	Yes ▶	GO to **A3**.
		No ▶	GO to **A6**.
A3	INSPECT WINDSHIELD WASHER NOZZLE JET FOR BLOCKAGE		
	• Inspect windshield washer nozzle jet for blockage. • **Is windshield washer nozzle jet blocked?**	Yes ▶	CLEAN or REPLACE windshield washer nozzle jet. RESTORE vehicle. RETEST system.
		No ▶	GO to **A4**.

DIAGNOSIS AND TESTING (Continued)

PINPOINT TEST A: WINDSHIELD WASHER SYSTEM INOPERATIVE (Continued)

Test Step		Result ▶	Action to Take
A4	INSPECT HOSE, FILTER, CHECK VALVE FOR BLOCKAGE OR KINKS		
	• Inspect hose for blockage or kinks. • **Are any blockages or kinks present?**	Yes ▶	CLEAN, SERVICE or REPLACE as necessary. RESTORE vehicle. RETEST system.
		No ▶	GO to **A5**.
A5	INSPECT WINDSHIELD WASHER PUMP INLET/OUTLET FOR BLOCKAGE		
	• Inspect windshield washer pump inlet/outlet for blockage. • **Is windshield washer pump inlet/outlet blocked or obstructed?**	Yes ▶	REMOVE windshield washer pump from windshield washer reservoir and CLEAN. RESTORE vehicle. RETEST system.
		No ▶	REPLACE windshield washer pump. RESTORE vehicle. RETEST system.
A6	CHECK FOR VOLTAGE AT WINDSHIELD WASHER PUMP		
	• Using a voltmeter, actuate the washer switch and check for voltage at windshield washer pump. • **Is battery voltage present?**	Yes ▶	GO to **A7**.
		No ▶	GO to **A8**.
A7	CHECK WINDSHIELD WASHER PUMP GROUND		
	• Using an ohmmeter connected to a known good ground, check ground at windshield washer pump connector with the other test lead. • **Is connector properly grounded with resistance of 5 ohms or less?**	Yes ▶	REPLACE windshield washer pump. RESTORE vehicle. RETEST system.
		No ▶	SERVICE Circuit 57 (BK) for open circuit. RESTORE vehicle. RETEST system.
A8	TURN ON WINDSHIELD WIPERS		
	• Check operation of windshield wipers. • **Do wipers operate?**	Yes ▶	GO to **A9**.
		No ▶	GO to Pinpoint Test B.
A9	CHECK MULTI-FUNCTION SWITCH RESISTANCE AT WIPER CONTROL MODULE		
	• Unplug connector from wiper control module connector C224. • Depress windshield washer switch on end of the multi-function switch. • Using an ohmmeter, check continuity between Circuits 993 (BR/W) and 590 (DB/W). • **Is there continuity?**	Yes ▶	GO to **A11**.
		No ▶	GO to **A10**.
A10	CHECK MULTI-FUNCTION SWITCH		
	• Unplug multi-function switch connector C230. • Depress multi-function switch. • Check for continuity between terminals 4 and 6. • **Is there continuity?**	Yes ▶	SERVICE open circuit between multi-function switch and wiper control module. RESTORE vehicle. RETEST system.
		No ▶	REPLACE multi-function switch. RESTORE vehicle. RETEST system.
A11	CHECK WASHER PUMP CIRCUIT		
	• Check continuity of Circuit 941 (BK/W) from wiper control module to windshield washer pump. • **Is there continuity?**	Yes ▶	REPLACE wiper control module. RESTORE vehicle. RETEST system.
		No ▶	SERVICE Circuit 941 (BK/W) for open circuit. RESTORE vehicle. RETEST system.

Ford Motor Company Licensed Product

DIAGNOSIS AND TESTING (Continued)

PINPOINT TEST B: WINDSHIELD WIPERS INOPERATIVE — ALL SWITCH POSITIONS

Test Step		Result ▶	Action to Take
B1	CHECK FOR SUPPLY VOLTAGE AT MOTOR		
	• Key to run. • Turn multi-function switch to HI. • Unplug windshield wiper motor. • Check for battery voltage at Circuit 65 (DG). • **Is battery voltage present?**	Yes ▶ No ▶	GO to **B2**. CHECK for open fuse. REPLACE fuse. If fuse fails again, SERVICE B+ short to ground in Circuit 65 (DG). RETEST system.
B2	CHECK FOR BATTERY VOLTAGE AT THE WINDSHIELD WIPER CONTROL MODULE		
	• Check for battery voltage at Circuit 65 (DG) Pins 2 and 11 of wiper control module connector C224. • **Is battery voltage present?**	Yes ▶ No ▶	GO to **B3**. SERVICE open in power feed to windshield wiper control module.
B3	CHECK FOR BATTERY VOLTAGE TO MOTOR WINDINGS		
	• Key to run. • Turn multi-function switch to HI. • Disconnect connector from windshield wiper motor . • Check for battery voltage between Circuits 61 (Y/R) and 58 (W). • **Is battery voltage present?**	Yes ▶ No ▶	PERFORM windshield wiper motor component test. REFER to Current Draw under Component Tests in the Diagnosis and Testing portion of this section. GO to **B4**.
B4	CHECK FOR BATTERY VOLTAGE AT WINDSHIELD WIPER CONTROL MODULE CONNECTOR		
	• Check for battery voltage between Pin 10 Circuit 61 (Y/R) and Pin 14 Circuit 58 (W) of windshield wiper control module connector C224. • **Is battery voltage present?**	Yes ▶ No ▶	CHECK for: • Open wire Circuits 58 (W) or 61 (Y/R). • Unseated terminals. GO to **B5**.
B5	CHECK WIRING BETWEEN WINDSHIELD WIPER CONTROL MODULE AND MULTI-FUNCTION SWITCH		
	• Disconnect windshield wiper control module connector C224 and multi-function switch connector C230. • Measure resistance between Circuits 993 (BR/W) and 589 (O) with multi-function switch at HI. • **Is resistance less than 5 ohms?**	Yes ▶ No ▶	REPLACE wiper control module. GO to **B6**.
B6	CHECK WIPER SWITCH CONTINUITY		
	• Disconnect multi-function switch connector C230 at steering column. • Check continuity between terminals 1 and 4 with switch at HI in on position. • **Is resistance less than 1 ohm?**	Yes ▶ No ▶	CHECK for open wire between multi-function switch and wiper control module. SERVICE as required. REPLACE multi-function switch.

PINPOINT TEST C: WINDSHIELD WIPERS INOPERATIVE AT HIGH SPEED

Test Step		Result ▶	Action to Take
C1	CHECK FOR BATTERY VOLTAGE TO MOTOR WINDINGS		
	• Key to run. • Turn multi-function switch to HI. • Disconnect connector from windshield wiper motor. • Check for battery voltage between Circuits 61 (Y/R) and 58 (W). • **Is voltage present?**	Yes ▶ No ▶	PERFORM windshield wiper motor component test. REFER to Current Draw under Component Tests in the Diagnosis and Testing portion of this section. GO to **C2**.
C2	CHECK FOR BATTERY VOLTAGE AT WIPER CONTROL MODULE CONNECTOR		
	• Check for battery voltage between Pins 10 and 14 (Circuits 61 [Y/R] and 58 [W]) of windshield wiper control module connector C224. • **Is voltage present with multi-function switch at HI?**	Yes ▶ No ▶	CHECK for: • Open in Circuits 58 (W)or 61 (Y/R). • Open connector. GO to **B3**. GO to **C3**.

Ford Motor Company Licensed Product

DIAGNOSIS AND TESTING (Continued)

PINPOINT TEST C: WINDSHIELD WIPERS INOPERATIVE AT HIGH SPEED (Continued)

Test Step		Result ▶	Action to Take
C3	CHECK WIRING BETWEEN WIPER CONTROL MODULE AND WIPER SWITCH		
	• Disconnect windshield wiper control module connector C224. • Measure resistance between Circuits 993 (BR/W) and 589 (O) with multi-function switch at HI. • **Is resistance less than 1 ohm?**	Yes ▶ No ▶	REPLACE windshield wiper control module. GO to **C4**.
C4	CHECK CONTROL LINE SIGNAL AT WIPER SWITCH		
	• Disconnect multi-function switch connector C230. • Check continuity between terminals 4 and 1. • **Is resistance less than 1 ohm?**	Yes ▶ No ▶	SERVICE open wire between multi-function switch and windshield wiper control module. REPLACE multi-function switch.

PINPOINT TEST D: WINDSHIELD WIPERS INOPERATIVE AT LOW SPEED

Test Step		Result ▶	Action to Take
D1	CHECK FOR BATTERY VOLTAGE TO MOTOR WINDINGS		
	• Key to run. • Turn multi-function switch to LO. • Disconnect connector from windshield wiper motor. • Check for battery voltage between Circuits 61 (Y/R) and 56 (DB/O). • **Is voltage present?**	Yes ▶ No ▶	PERFORM windshield wiper motor component test. REFER to Current Draw under Component Tests in the Diagnosis and Testing portion of this section. GO to **D2**.
D2	CHECK FOR BATTERY VOLTAGE AT WIPER CONTROL MODULE CONNECTOR		
	• Check for battery voltage between Pins 10 and 8 (Circuits 61 [Y/R] and 56 [DB/O]) of windshield wiper control module connector C224. • **Is voltage present with multi-function switch at LO?**	Yes ▶ No ▶	CHECK for: • Open in Circuits 56 (DB/O) or 61 (Y/R). • Open connector. GO to **D3**.
D3	CHECK WIRING BETWEEN WIPER CONTROL MODULE AND WIPER SWITCH		
	• Disconnect windshield wiper control module connector C224. • Measure resistance between Circuits 993 (BR/W) and 589 (O) with multi-function switch at LO. • **Is resistance between 3.5 and 4.5 ohms?**	Yes ▶ No ▶	REPLACE windshield wiper control module. GO to **D4**.
D4	CHECK CONTROL LINE SIGNAL AT WIPER SWITCH		
	• Disconnect multi-function switch connector C230. • Check continuity between terminals 4 and 1. • **Is resistance between 3.5 and 4.5 ohms?**	Yes ▶ No ▶	SERVICE open wire between multi-function switch and windshield wiper control module. REPLACE multi-function switch.

PINPOINT TEST E: WINDSHIELD WIPERS INOPERATIVE AT INTERVAL SETTING

Test Step		Result ▶	Action to Take
E1	CHECK OPERATION		
	• Check operation of wipers in low speed setting. • **Does low speed work?**	Yes ▶ No ▶	GO to **E2**. GO to **D1**.
E2	CHECK MODE SELECT INPUT SIGNAL		
	• Disconnect windshield wiper control module connector C224. • Measure resistance between Circuits 993 (BR/W) and 589 (O) with multi-function switch at interval. • **Is resistance between 10.5 k ohms and 12 k ohms?**	Yes ▶ No ▶	GO to **E4**. GO to **E3**.

Official Licensed Product

DIAGNOSIS AND TESTING (Continued)

PINPOINT TEST E: WINDSHIELD WIPERS INOPERATIVE AT INTERVAL SETTING (Continued)

Test Step		Result ▶	Action to Take
E3	CHECK MODE SELECT SIGNAL AT WIPER SWITCH		
	• Disconnect multi-function switch connector C230. • Measure between terminals 4 and 1 with multi-function switch at interval. • **Is resistance between 10.5 k ohms and 12 k ohms?**	Yes ▶	CHECK for open wire between multi-function switch and windshield wiper control module. SERVICE as required.
		No ▶	REPLACE multi-function switch. SERVICE as required.
E4	CHECK INTERVAL SELECT INPUT SIGNAL		
	• Measure resistance between Circuits 590 (DB/W) and 993 (BR/W) at the wiper control module connector C224 while rotating the interval select on the multi-function switch from S to F. • **Is resistance 3.3 k-103.3 k ohms?**	Yes ▶	REPLACE windshield wiper control module.
		No ▶	GO to **E5**.
E5	CHECK INTERVAL SELECT INPUT SIGNAL AT WIPER SWITCH		
	• Measure resistance between terminals 4 and 1, while rotating the interval select on the multi-function switch from S to F. • **Is resistance 3.3 k-103.3 k ohms?**	Yes ▶	CHECK for open wires between the multi-function switch and the windshield wiper control module. SERVICE as required.
		No ▶	REPLACE multi-function switch. SERVICE as required.

PINPOINT TEST F: WINDSHIELD WIPERS WILL NOT PARK AT PROPER POSITION

Test Step		Result ▶	Action to Take
F1	CHECK WIPER MOTOR GROUND		
	• Unplug wiper motor connector. Check for ground at Circuit 57 (BK). • **Is ground OK?**	Yes ▶	GO to **F2**.
		No ▶	SERVICE Circuit 57 (BK) for open circuit. RESTORE vehicle. RETEST system.
F2	CHECK FOR POWER AT WIPER MOTOR		
	• Key to run and multi-function switch off. • Check for battery voltage between Circuit 65 (DG) and Circuit 57 (BK) at the motor connector. • **Is battery voltage present?**	Yes ▶	GO to **F3**.
		No ▶	SERVICE open circuits. RESTORE vehicle. RETEST system.
F3	CHECK MOTOR CIRCUIT CONTINUITY THROUGH WIPER CONTROL MODULE		
	• With wiper switch at off, check continuity of Circuit 28 (BK/PK) to 56 (DB/O) and Circuit 61 (Y/R) to 57 (BK). • **Is continuity OK?**	Yes ▶	GO to **F5**.
		No ▶	GO to **F4**.
F4	CHECK CIRCUITS TO WIPER CONTROL MODULE		
	• Unplug wiper control module connector C224. • Check continuity of Circuits 28 (BK/PK), 56 (DB/O), 61 (Y/R), and 57 (BK) from wiper motor to wiper control module. • **Is continuity OK?**	Yes ▶	REPLACE wiper control module. RESTORE vehicle. RETEST system.
		No ▶	SERVICE open circuits. RESTORE vehicle. RETEST system.
F5	CHECK WIPER ARMS		
	• Check wiper arms for mispositioning. • **Are wiper arms mispositioned or bent?**	Yes ▶	SERVICE wiper arms.
		No ▶	GO to **F6**.
F6	CHECK WIPER LINKAGE		
	• Check that wiper linkage is not bent, cracked or mispositioned from motor shaft. • **Is linkage OK?**	Yes ▶	REPLACE windshield wiper motor. RESTORE vehicle. RETEST system.
		No ▶	SERVICE linkage. RESTORE vehicle. RETEST system.

DIAGNOSIS AND TESTING (Continued)

PINPOINT TEST G: WINDSHIELD WIPERS CONTINUE TO RUN WHEN SWITCH IS TURNED OFF

Test Step		Result ▶	Action to Take
G1	CHECK CONNECTIONS		
	• Check that windshield wiper motor and wiper control module connectors are fully seated. • **Are connections OK?**	Yes ▶ No ▶	GO to **G2**. SERVICE as required. RECHECK system.
G2	CHECK CIRCUIT CONTINUITY THROUGH WIPER CONTROL MODULE		
	• Disconnect windshield wiper motor. • With wiper switch at off, check continuity of Circuit 28 (BK/PK) to 56 (DB/O) and Circuit 61 (Y/R) to 57 (BK) at motor connector. • **Is there continuity?**	Yes ▶ No ▶	REPLACE windshield wiper motor. RESTORE vehicle. RETEST system. GO to **G3**.
G3	CHECK CIRCUITS TO WIPER CONTROL MODULE		
	• Check continuity of Circuits 28 (BK/PK), 56 (DB/O), 61 (Y/R) and 57 (BK) from windshield wiper motor to wiper control module. • **Is continuity OK?**	Yes ▶ No ▶	GO to **G4**. SERVICE circuits as required. RESTORE vehicle. RETEST system.
G4	CHECK CIRCUITS TO WINDSHIELD WIPER SWITCH		
	• With wiper switch at off, measure resistance between Circuits 589 (O) and 933 (BR/W) at wiper module. • **Is resistance 45 k ohms to 50 k ohms?**	Yes ▶ No ▶	REPLACE wiper control module. RESTORE vehicle. RETEST system. GO to **G5**.
G5	CHECK CIRCUIT CONTINUITY		
	• Check continuity of Circuits 589 (O) and 993 (BR/W) between wiper switch and wiper control module. • **Is continuity OK?**	Yes ▶ No ▶	REPLACE multi-function switch. RESTORE vehicle. RETEST system. SERVICE open circuits. RESTORE vehicle. RETEST system.

Original Licensed Product Ford Motor Company

Component Tests

Testing should be done with an ohmmeter such as Rotunda Digital Volt-Ohmmeter 014-00407 or equivalent.

DIAGNOSIS AND TESTING (Continued)

Wiper/Washer Switch

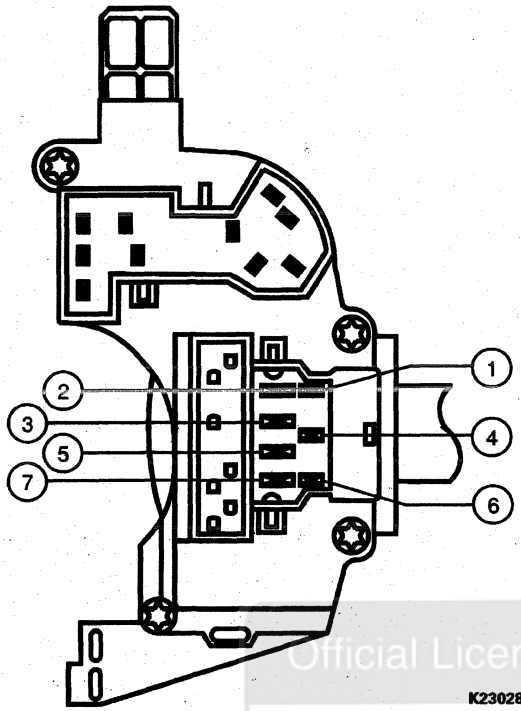

Pin Number	Circuit	Circuit Function
1	589 (O)	Multi-Function Switch Mode
2	15 (R/Y)	Headlamp Dimmer Switch Feed
3	13 (R/BK)	Headlamp Dimmer Switch to Low Beams
4	993 (BR/W)	Multi-Function Switch (Common)
5	12 (LG/BK)	Headlamp Dimmer Switch to High Beams
6	590 (DB/W)	Multi-Function Switch (Internal Mode)
7	196 (DB/O)	Instrument Panel Lamps Feed

NOTE: Terminals 1, 4 and 6 are the only ones used for this test.

WINDSHIELD WIPER SWITCH CONTINUITY TEST

To Test	Connect Ohmmeter to Terminals	Move Switch to These Positions	A Good Switch Will Indicate:
Washer Switch Circuit	590 (DB/W) and 993 (BR/W)	With Wiper Switch OFF: Push Washer Switch In, Release Washer Switch	Closed Circuit 103.3 k ohm (± 10%)
Wiper Switch Circuit	589 (O) and 993 (BR/W)	OFF Int LO HI	47.6 k ohm 11.33 k ohm 4.08 k ohm Closed Circuit (± 5%)
Interval Time Adjust	590 (DB/W) and 993 (BR/W)	Int and OFF LO and HI	Rotate control toward OFF; ohmmeter will show smoothly increasing resistance from 3.3 k ohm min. to 103.3 k ohm max. (± 10%) 3.3 k ohm (± 10%)

Current Draw — Windshield Washer Pump

Attach leads of the volt-amp tester, such as Rotunda Alternator, Regulator, Battery and Starter Tester (ARBST) 010-00725 or Rotunda Digital Volt-Ohmmeter 014-00407 or equivalent. Current draw should not exceed 4 amps, or indicate less than 2 amps while the washer pump motor is pumping fluid.

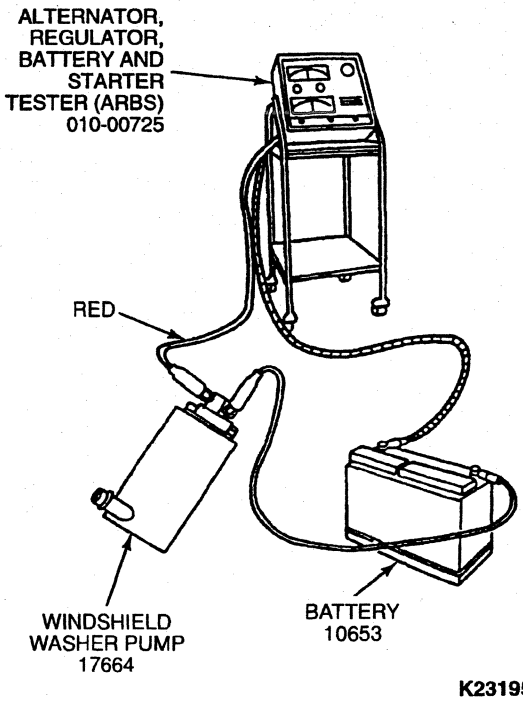

Official Licensed Product
Ford Motor Company

DIAGNOSIS AND TESTING (Continued)

Current Draw — Windshield Wiper Motor

CAUTION: Rough handling of a windshield wiper motor during testing or servicing can damage the field magnets. If the magnets are damaged, the wiper motor will not operate and must be replaced.

To measure wiper motor current draw, on vehicle, proceed as follows:

1. Disconnect windshield wiper mounting arm and pivot shaft (17566) from motor.
2. Disconnect wiring at wiper motor.
3. Connect green lead from Rotunda Alternator, Regulator, Battery and Starter Tester (ARBST) 010-00725 or equivalent to battery negative terminal.
4. Connect tester red lead to motor common brush terminal.
5. To measure low speed current draw, connect jumper wire from battery positive terminal to low speed brush terminal. Motor should operate and current draw should not exceed 3.5 amperes.
6. To measure high speed current draw, move jumper wire to high speed brush terminal. Current draw should not exceed 5.5 amperes.

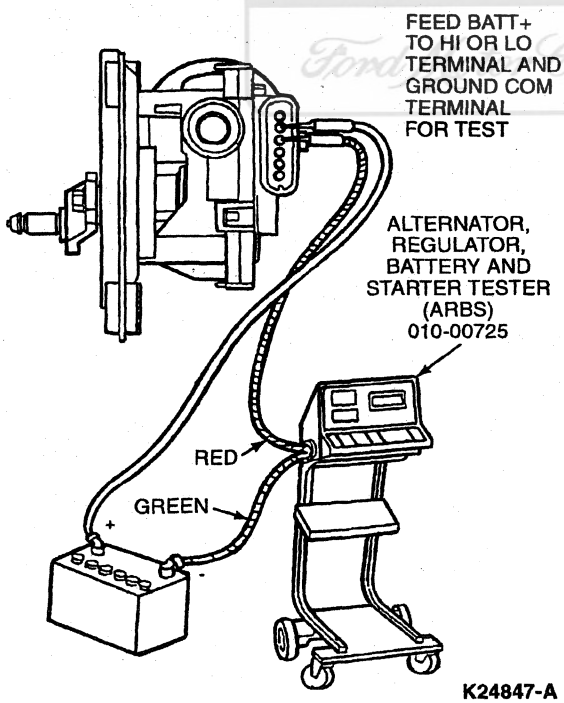

Current Draw — Park Test

1. Connect a jumper lead from low speed terminal (Circuit 56 [DB/O]) of windshield wiper motor connector to park return terminal of park switch connector.
2. Jumper both windshield wiper motor and park switch ground terminals to battery ground cable (14301).
3. Connect a jumper lead from battery positive terminal to park feed terminal. Windshield wiper motor should cycle once, then stop in park position.

REMOVAL AND INSTALLATION

Windshield Wiper

Mounting Arm and Pivot Shaft

Removal

1. Remove windshield wiper pivot arms (17526).
2. Remove bottom windshield moulding.
3. Remove the five screws through the access holes across the top of the cowl top vent panel (022A68).
4. Open hood (16612) and disconnect battery ground cable (14301).
5. Remove the ten screws across the vertical surface attaching the cowl top vent panel to the cowl top.
6. Close the hood part way and carefully lift the cowl top vent panel from the cowl top.
7. NOTE: Antenna will disconnect when cowl top vent panel is removed. If antenna becomes disconnected from cowl top outer panel, refer to Section 15-02 for removal and installation procedure.

   Disconnect or remove the radio antenna or lead wire as required.
8. Disconnect the hose (17543). Remove the cowl top vent panel.

Official Licensed Product
Ford Motor Company

REMOVAL AND INSTALLATION (Continued)

Cowl Top Vent Panel

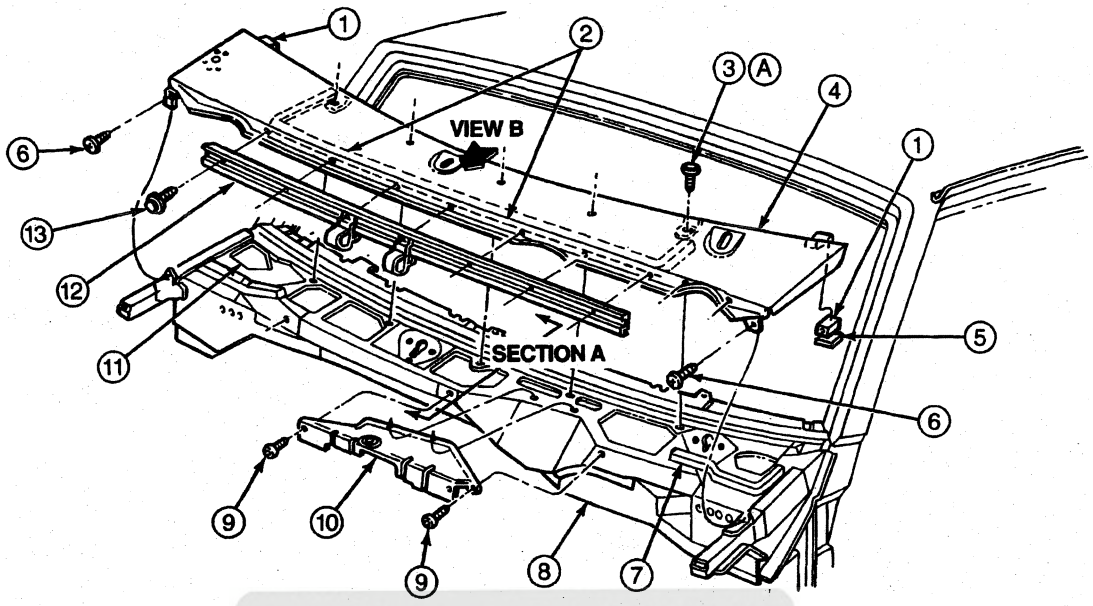

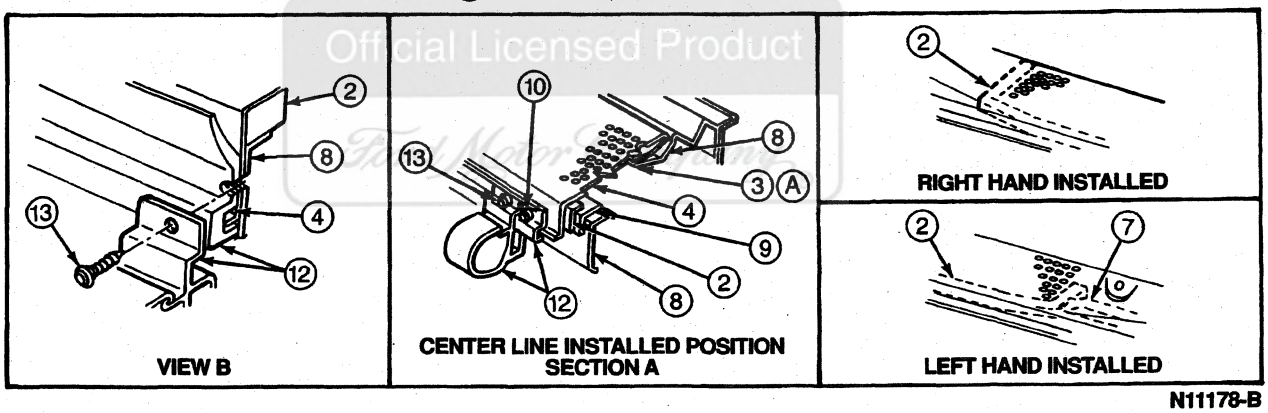

N11178-B

Item	Part Number	Description
1	ESB-M3G102-A	Foam Tape
2	022A70	Cowl Top Grille Seal Assy
3	56903-S55	Screw (5 Req'd)
4	022A68	Cowl Top Vent Panel with Radio Antenna Holes
5	15022A56	Cowl Top Vent Grille Spacer
6	56910-S2	Screw (2 Req'd)
7	1502919	Cowl Top Panel to Hood Seal
8	02012	Cowl Top Outer Panel

(Continued)

Item	Part Number	Description
9	55927-S2	Screw (4 Req'd)
10	022A48	Cowl Top Outer Panel Extension
11	020A50	Cowl Top Panel Access Hole (1 Req'd LH Side)
12	02824	Cowl Top Panel to Hood Seal Assy
13	56902-S55-X	Screw (7 Req'd)
A	—	Tighten to 1.4-2.0 N·m (12-17 Lb-In)

9. Remove windshield wiper adapter and connecting arm clip (17531) connecting windshield wiper mounting arm and pivot shaft (17566) to windshield wiper motor drive arm.

10. Remove bolts attaching windshield wiper mounting arm and pivot shaft to the cowl top.
11. Remove windshield wiper mounting arm and pivot shaft from vehicle.

REMOVAL AND INSTALLATION (Continued)

Installation

1. Follow removal procedure in reverse order. Before installing the wiper arms, cycle windshield wiper motor (17504) using wiper switch to make sure the wiper linkage is in the park position.

Wiper Arm and Pivot Shaft

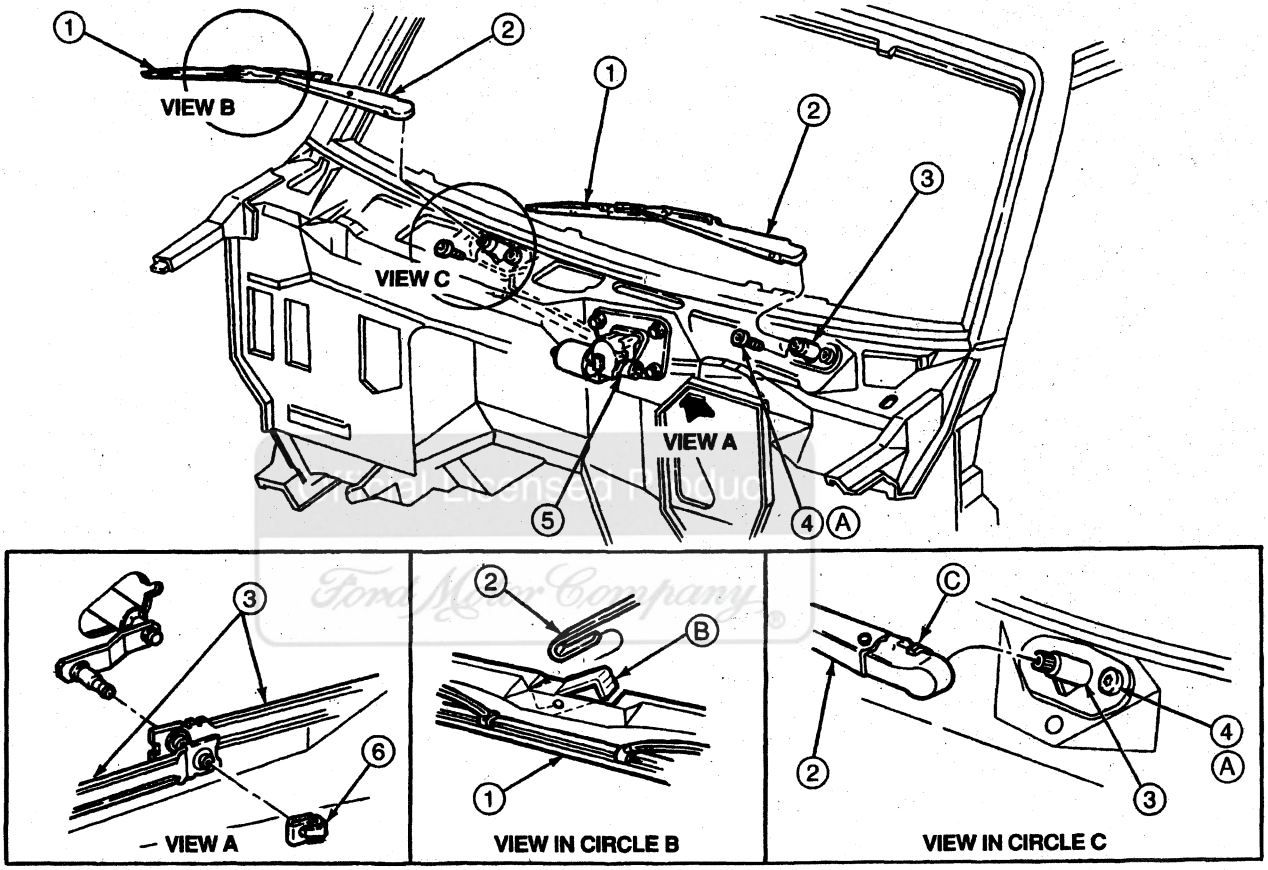

K20254-C

Item	Part Number	Description
1	17528	Windshield Wiper Blade
2	17526	Windshield Wiper Pivot Arm
3	17566	Windshield Wiper Mounting Arm and Pivot Shaft
4	387978-S56	Screw (2 Req'd Each Side)
5	17504	Windshield Wiper Motor

(Continued)

Item	Part Number	Description
6	17531	Windshield Wiper Adapter and Connecting Arm Clip
A	—	Tighten to 7-10 N·m (62-88 Lb-In)
B	—	Push Pin to Release Blade
C	—	Unlatched (Shipping) Position. Apply Finger Pressure Only to Latch.

Pivot Arm

Removal

1. Raise windshield wiper blade (17528) end off windshield and slide latch away from windshield wiper mounting arm and pivot shaft.
2. Unlock windshield wiper pivot arm from windshield wiper mounting arm and pivot shaft.
3. Remove windshield wiper pivot arm. Windshield wiper pivot arms can be removed and installed without the aid of any tools.

REMOVAL AND INSTALLATION (Continued)

Installation

1. Follow removal procedure in reverse order. If windshield wiper blade does not touch windshield, then slide latch is not completely in place.

Wiper Motor

Removal

1. Remove windshield wiper pivot arms as described in this section.
2. Remove bottom windshield moulding.
3. Remove the five screws through the access holes across the cowl top vent panel.
4. NOTE: When the battery (10655) has been disconnected and reconnected, some abnormal drive symptoms may occur while the powertrain control module (PCM)(12A650) relearns its adaptive strategy. The vehicle may need to be driven 16 km (10 miles) or more to relearn the strategy.

   Open hood and disconnect battery ground cable.
5. Remove the ten screws across the vertical surface attaching the cowl top vent panel to the cowl top.
6. Close the hood part way and carefully lift the cowl top vent panel from the cowl top.
7. NOTE: Antenna will disconnect when cowl grille is removed. If antenna becomes disconnected from cowl top vent panel, refer to Section 15-02 for removal and installation procedures.

   Disconnect or remove the radio antenna or lead wire as required.
8. Disconnect the washer hose. Remove the cowl top vent panel.
9. Remove the metal shield above the windshield wiper motor.
10. Remove windshield wiper adapter and connecting arm clip connecting windshield wiper mounting arm and pivot shaft to windshield wiper motor drive arm.
11. Disconnect the electrical connector to windshield wiper motor.
12. Remove bolts attaching windshield wiper motor to the cowl top.
13. Remove windshield wiper motor from vehicle.

Installation

1. Follow removal procedure in reverse order. Before installing the wiper arms, cycle windshield wiper motor using wiper switch to make sure the wiper linkage is in the park position.

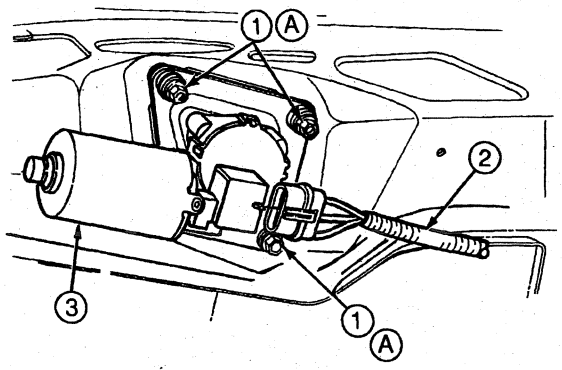

K19609-C

Item	Part Number	Description
1	N804051-S190	Screw
2	12A581	Main Engine Control Wiring Harness
3	17504	Windshield Wiper Motor
A	—	Tighten to 6.8-9.6 N·m (60-85 Lb-In)

2. Tighten windshield wiper motor attaching screws to 6.8-9.6 N·m (60-85 lb-in).

Windshield Wiper Control Module

Removal

1. Open hood and disconnect battery ground cable.
2. Remove glove compartment.
3. Using the glove compartment opening for access, disconnect main wiring (14401).
4. From under the instrument panel (04320), use a flat-edged screwdriver to remove wiper control module from tabs on bracket.
5. Remove wiper control module from the vehicle.

Installation

1. NOTE: When the battery has been disconnected and reconnected, some abnormal drive symptoms may occur while the powertrain control module relearns its adaptive strategy. The vehicle may need to be driven 16 km (10 miles) or more to relearn the strategy.

   Follow removal procedure in reverse order.

Official Licensed Product

REMOVAL AND INSTALLATION (Continued)

2. Tighten wiper control module screw to 3.1-4.3 N·m (27-38 lb-in).

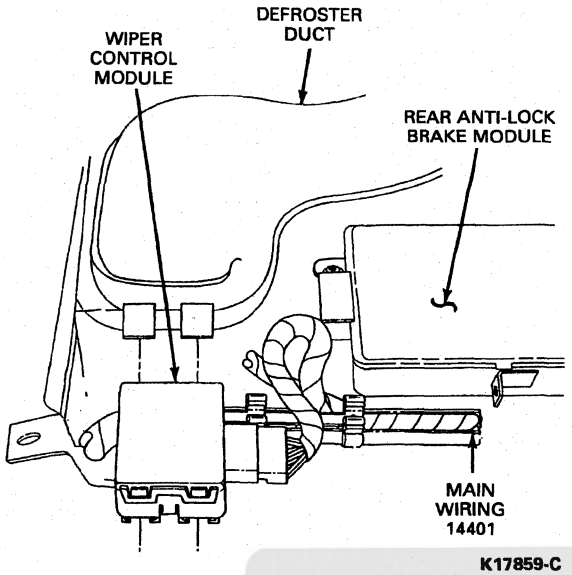

Washer Nozzle Jet and Bracket

Removal

1. Disconnect the washer nozzle hose using a long-blade screwdriver.
2. Squeeze locking tabs and push the windshield washer nozzle jet and bracket (17603) up through the cowl top outer panel (02012).

Installation

1. Follow removal procedure in reverse order.

Washer Pump and Reservoir

CAUTION: Do not make electrical connection prior to filling windshield washer reservoir (17618). Do not operate windshield washer pump (17664) prior to filling windshield washer reservoir.

NOTE: The windshield washer reservoir and windshield washer reservoir cover (17632) are not serviced separately. The retaining ring, seal and pump impeller can be serviced as individual components.

Removal

1. Open hood (16612) and disconnect battery ground cable (14301).
2. Disconnect headlamp dash panel junction wire (14290) from windshield washer pump, using a small screwdriver to unlock tabs.
3. Disconnect hose (17543) from windshield washer nozzle jet and bracket (17603).
4. Remove screws or nuts retaining windshield washer reservoir to front fender (16005) or washer reservoir mounting bracket (17651).
5. Disconnect hose to drain windshield washer reservoir.

Installation

1. Follow removal procedure in reverse order.

Official Licensed Product Ford Motor Company

REMOVAL AND INSTALLATION (Continued)

Windshield Washer Pump, Reservoir and Jet Installation

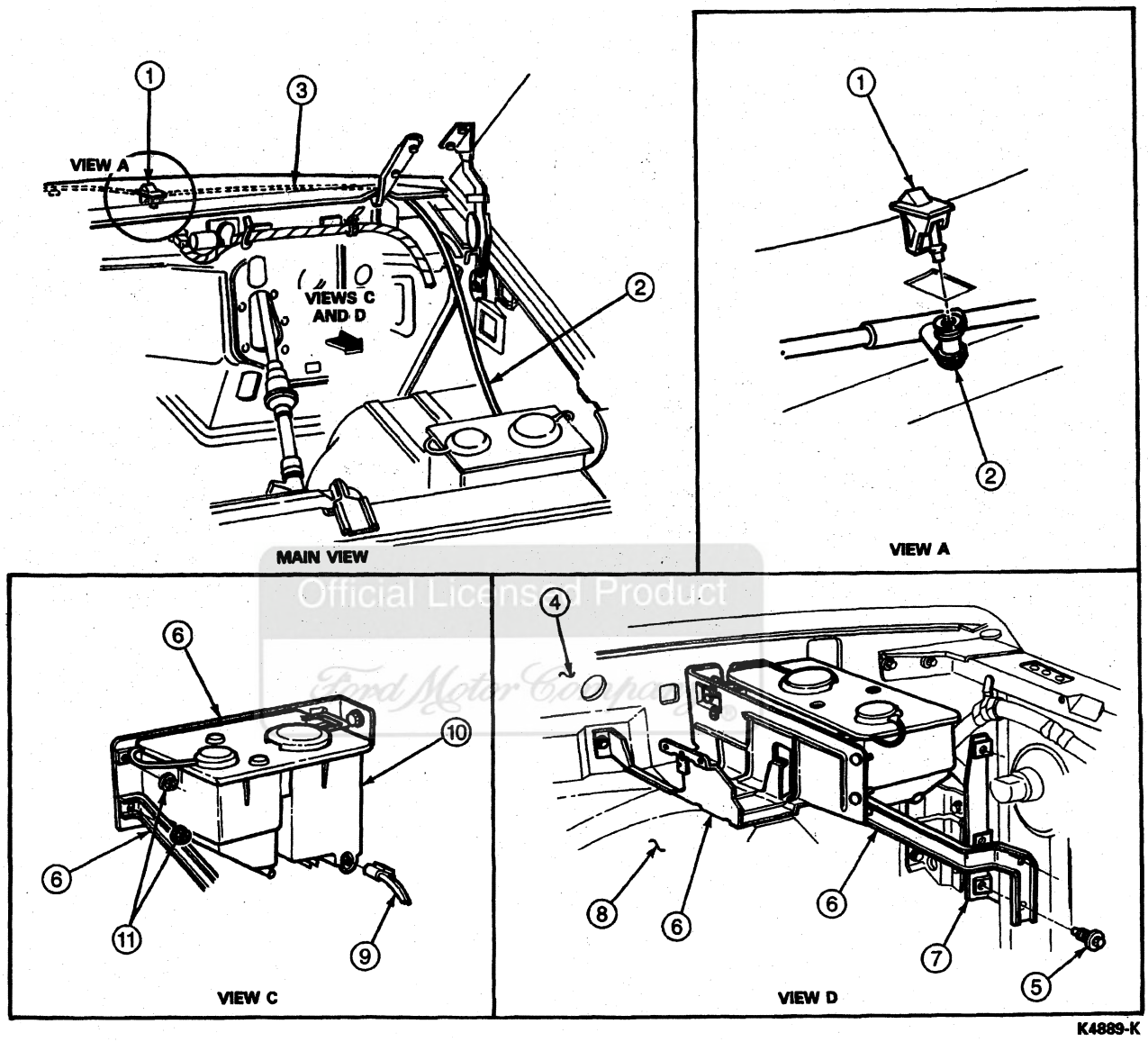

Official Licensed Product
Ford Motor Company

Item	Part Number	Description
1	17603	Windshield Washer Nozzle Jet and Bracket
2	17543	Hose
3	02012	Cowl Top Outer Panel
4	16005	Front Fender, Inner
5	N606690-S36	Screw and Washer (2 Req'd)
6	17651	Washer Reservoir Mounting Bracket

(Continued)

Item	Part Number	Description
7	61A12	Retainer
8	16102	Front Fender Splash Shield
9	14290	Headlamp Dash Panel Junction Wire
10	17618	Windshield Washer Reservoir
11	N621906-S36	Nut (2 Req'd)

REMOVAL AND INSTALLATION (Continued)

Windshield Washer Pump, Seal and Impeller Assembly

Removal

1. Remove windshield washer reservoir (17618) from vehicle.
2. Disconnect electrical connector and hose (17543) from windshield washer pump (17664).
3. Using a small-bladed screwdriver, pry out retaining ring.

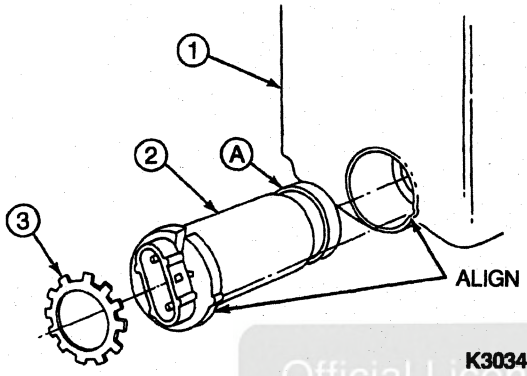

K3034-E

Item	Part Number	Description
1	17618	Windshield Washer Reservoir
2	17664	Windshield Washer Pump
3	—	Retaining Ring (Part of 17K624)
A	—	Add Dry Lube

4. Using pliers to grip one wall around the electrical terminals, pull out windshield washer pump, seal and impeller assembly. If the impeller and seal come off when the windshield washer pump is pulled, they can be reassembled.

Installation

1. Make sure the chamber of windshield washer pump is free of foreign material prior to installing windshield washer pump into new windshield washer reservoir.

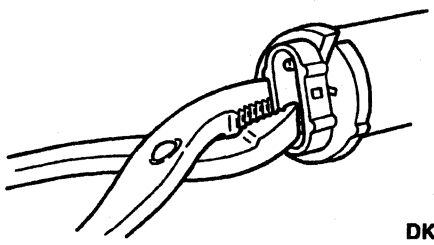

DK0140-A

2. Before installing the windshield washer pump, lubricate the outside diameter of the seal with a dry lubricant such as powdered graphite. This will prevent the seal from sticking to the wall of the windshield washer reservoir, making assembly easier.
3. Align small projection on end cap of windshield washer pump with the slot in windshield washer reservoir.
4. Assemble windshield washer pump so seal seats against the bottom of the cavity.
5. Using a 25.4-mm (1-inch) socket (preferably 12-point), hand-press retaining ring securely against end plate on windshield washer pump.
6. Connect headlamp dash panel junction wire (14290) and windshield washer hose.
7. Install windshield washer reservoir into vehicle as described in this section.
8. Fill windshield washer reservoir.
9. **CAUTION: Do not operate windshield washer pump until fluid is added to the windshield washer reservoir.**

   Check washer system for proper operation.
10. Check for leaks and align the windshield washer nozzle jet and brackets (17603) if necessary.

Washer System, Windshield, Class A Motorhome Chassis

Ford Motor Company supplies only the control circuitry for the windshield washer system. The windshield washer pump (17664), windshield washer reservoir (17618), windshield washer nozzle jet and brackets (17603), nozzles, and attaching parts are supplied by the RV manufacturer or commercial body builder. For removal and installation instructions for washer systems components, contact the appropriate RV dealer or commercial body builder.

ADJUSTMENTS

Windshield Wiper Arm and Blade Assembly, Class A Motorhome Chassis

For adjustment procedures for windshield wiper pivot arms (17526) and windshield wiper blades (17528), consult the appropriate RV dealer or commercial body builder.

Official Licensed Product Motor Company

ADJUSTMENTS (Continued)

Park Position

Remove the windshield wiper pivot arms (17526) and windshield wiper blades (17528) from windshield wiper mounting arm and pivot shafts (17566). Turn on the multi-function switch (13K359) to allow the windshield wiper motor (17504) to move the windshield wiper mounting arm and pivot shaft three or four cycles, and then turn off windshield wiper motor. This will place the windshield wiper mounting arm and pivot shaft in park position.

Windshield Wiper Pivot Arm and Windshield Wiper Blade

Install the windshield wiper pivot arms (17526) onto windshield wiper mounting arm and pivot shafts (17566) to Dimension X. Dimension X is the distance between the centerline of the blade saddle and the windshield lower moulding or cowl top vent of the windshield wiper blade (17528). The value of Dimension X for each vehicle is as follows.

DIMENSION X

Driver's Side	Passenger Side
35 to 65 mm	50 to 82 mm
(1.37 to 2.55 Inches)	(1.96 to 3.22 Inches)

Unlicensed Product
Ford Motor Company

SPECIFICATIONS

WINDSHIELD WIPER MOTOR AND SWITCH TEST CURRENT LIMITS

Motor Type	Motor Current[a] Draw Test
Non-Depressed Park (Low Speed)	3.5 Amperes
Non-Depressed Park (High Speed)	5.5 Amperes

a Motor maximum current when operated without linkage attached.

TORQUE SPECIFICATIONS

Description	N·m	Lb-In
Mounting Arm and Pivot Shaft	7-10	62-88
Windshield Wiper Motor	6.8-9.6	60-85
Wiper Control Module Screw	3.1-4.3	27-38
Cowl Top Vent Panel Screw	1.4-2.0	12-17

SPECIAL SERVICE TOOLS/EQUIPMENT

ROTUNDA EQUIPMENT

Model	Description
010-00725	Alternator, Regulator, Battery and Starter Tester (ARBS)
014-00407	Digital Volt-Ohmmeter

SECTION 01-19 Bumpers

SUBJECT	PAGE
VEHICLE APPLICATION	01-19-1
REMOVAL AND INSTALLATION	
Air Deflector, Vehicles with 7.3L Diesel Engine	01-19-4
REMOVAL AND INSTALLATION (Cont'd.)	
Bumper, Front	01-19-1
Bumper, Rear	01-19-3
SPECIFICATIONS	01-19-5

VEHICLE APPLICATION

F-250 Heavy Duty, F-350 and F-Super Duty Chassis Cab

REMOVAL AND INSTALLATION

Bumper, Front

Removal

1. Support the bumper assembly and remove the four nuts (two each side) retaining the assembly to the frame mounting brackets.
2. Carefully lower the bumper assembly from vehicle and lay it on a protective surface.
3. If replacing bumper bar, remove front bumper horizontal pads (17C829), front fender apron and radiator support braces (16A023) or front license plate mounting bracket (17A386).

Installation

1. If bumper bar was replaced, install front bumper horizontal pads, front fender apron and radiator support braces or front license plate mounting bracket.
2. Align bumper assembly mounting studs to the holes in the frame mounting brackets.
3. Insert studs through slot in frame brackets. Loosely assemble nuts to hold front bumper (17757) to frame (5005) (side rail).
4. Align front bumper to front fenders (16005) and sheet metal stone deflector maintaining a parallel margin of 18-31 mm (0.76-1.24 inch). If rotation is an issue, use shim as required.
5. After front bumper is aligned, tighten nuts to 60-80 N·m (44-59 lb-ft).

Official Licensed Product Ford Motor Company

REMOVAL AND INSTALLATION (Continued)

Front Bumper

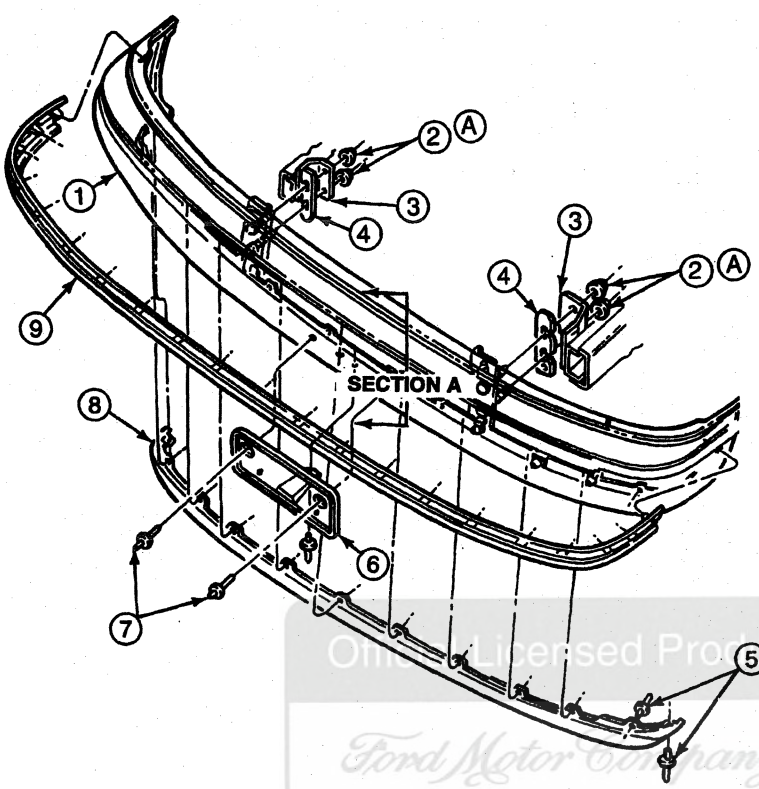

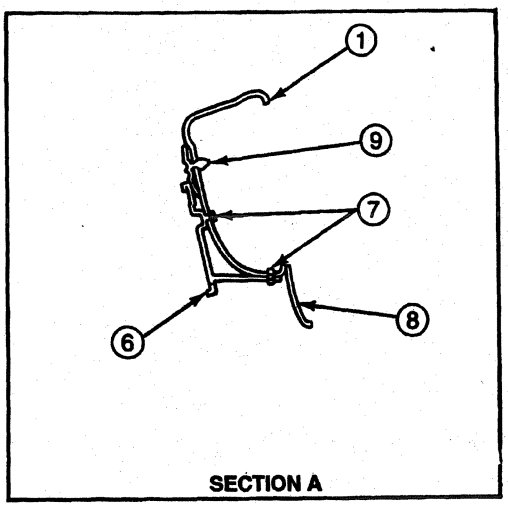

Officially Licensed Product
Ford Motor Company

DN0184-A

Item	Part Number	Description
1	17757	Front Bumper
2	N804525-S59	Nut
3	5005	Frame (Side Rail)
4	17765	Bumper Isolator and Bracket Spacer
5	388442-S309	Rivet (12 Req'd)

(Continued)

Item	Part Number	Description
6	17A385	Front License Plate Mounting Bracket
7	N803043-S	Rivet (3 Req'd)
8	17626	Front Valance Panel
9	17C829	Front Bumper Horizontal Pad
A	—	Tighten to 60-80 N-m (44-59 Lb-Ft)

REMOVAL AND INSTALLATION (Continued)

Front Bumper, Vehicles with 7.3L Diesel Engine

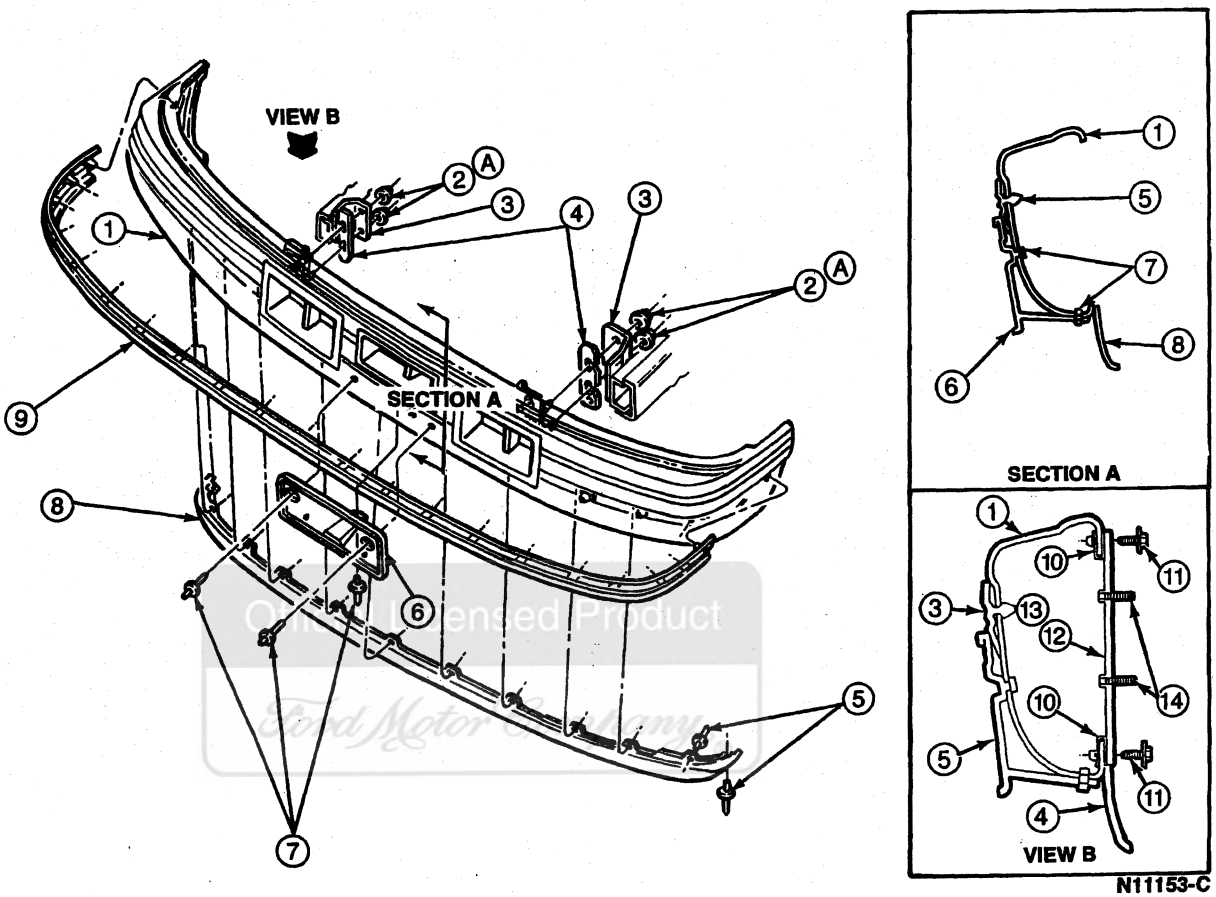

Item	Part Number	Description
1	17757	Front Bumper
2	N804525-S59	Nut
3	5005	Frame
4	17765	Bumper Isolator and Bracket Spacer
5	388442-S54	Rivet (12 Req'd)
6	17A386	Front License Plate Mounting Bracket
7	N803043-S	Rivet (3 Req'd)

(Continued)

Item	Part Number	Description
8	17626	Front Valance Panel
9	17C829	Front Bumper Horizontal Pad
10	N800296-S100	U-Nut (4 Req'd)
11	N606689-S301	Screw and Washer (4 Req'd)
12	17766	Arm, Front Bumper (RH)
13	17767	Arm, Front Bumper (LH)
14	N605934-S53	Bolt (4 Req'd)
A	—	Tighten to 60-80 N·m (44-59 Lb-Ft)

Bumper, Rear

Removal

The rear bumper (17906) removal for all models is shown in the following illustration.

1. Remove bolts retaining rear bumper isolator and bracket (17787) (RH) and rear bumper isolator and bracket (17788) (LH) to frame (5005) (side rails).
2. Remove rear bumper, rear bumper isolator and bracket (RH) and rear bumper isolator and bracket (LH).

REMOVAL AND INSTALLATION (Continued)

3. Remove the rear bumper isolator and bracket (RH) and rear bumper isolator and bracket (LH) from the rear bumper.

Rear Bumper

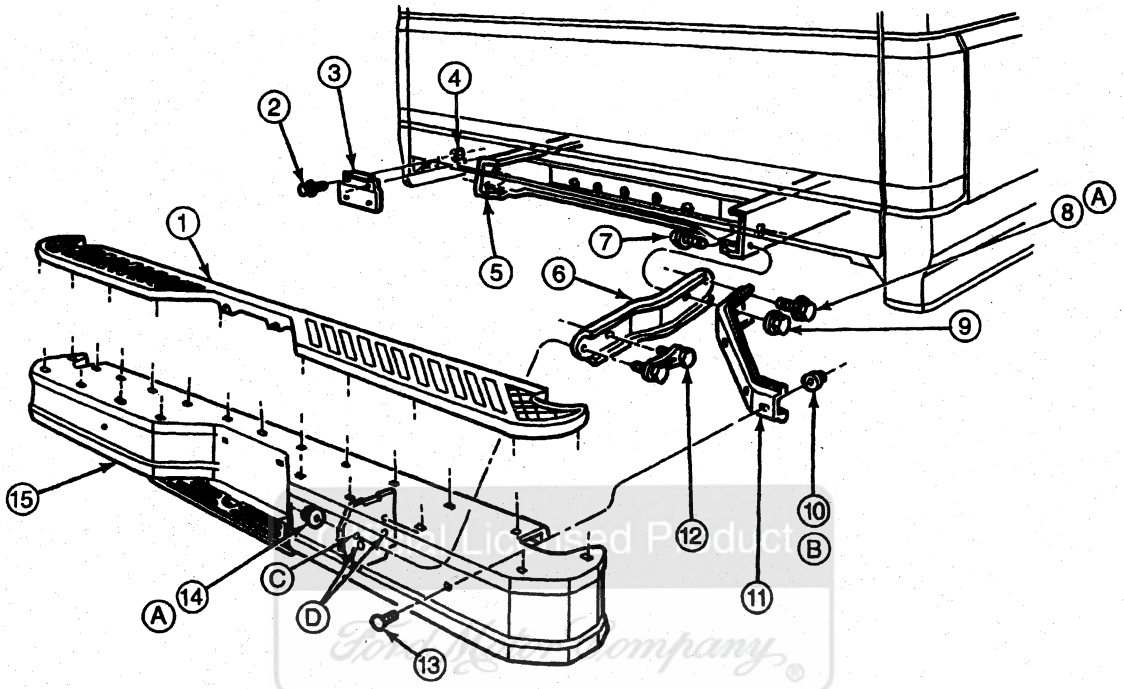

DN0185-A

Item	Part Number	Description
1	17B807	Rear Bumper Step
2	N802118-S	Screw and Washer (2 Req'd) LH Side Only
3	13406	Rear License Plate Bracket, (1 Req'd), LH Side Without Bumper
4	W620397-S36	Nut and Washer (2 Req'd) LH Side Only
5	5005	Frame (Side Rail)
6	17787	Rear Bumper Isolator and Bracket
7	N807422-S60	Bolt (1 Req'd Each Side)
8	N807254-S60	Bolt (1 Req'd Each Side)
9	N620484-S60	Nut (1 Req'd Each Side)
10	N621945-S	Nut and Washer Assy (1 Req'd Each Side)

(Continued)

Item	Part Number	Description
11	17795	Arm, Rear Bumper, Outer
12	N806694-S100	Bolt and Retainer Assy (1 Req'd Each Side)
13	N804926-S104	Bolt (1 Req'd Each Side) Argent or Chrome
14	N620484-S2	Nut and Washer (2 Req'd Each Side)
15	17775	Rear Bumper
A	—	Tighten to 98-132 N·m (72-98 Lb-Ft)
B	—	Tighten to 45-65 N·m (33-48 Lb-Ft)
C	—	For Dual Wheels Only
D	—	For Single Rear Wheels Only

Air Deflector, Vehicles with 7.3L Diesel Engine

Removal

1. Remove eight rivets retaining air deflector to the radiator support.
2. Remove the air deflector.

Installation

1. Install the air deflector to radiator support.

REMOVAL AND INSTALLATION (Continued)

2. Install eight rivets.

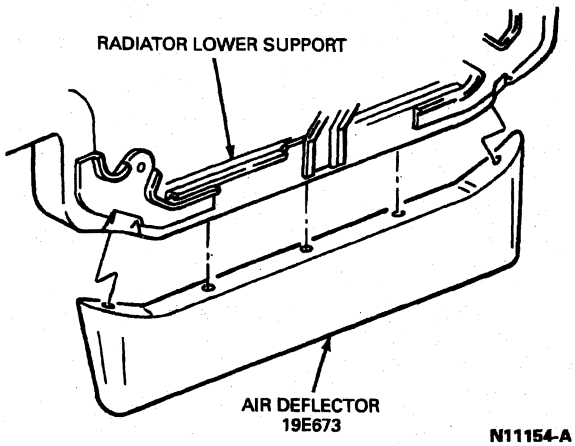

SPECIFICATIONS

TORQUE SPECIFICATIONS

Description	N·m	Lb-Ft
Nut and Washer, Rear Bumper	98-132	72-98
Nut to Frame Side Rail	60-80	44-59
Nut and Washer Assembly, Outer Arm to Rear Bumper	45-65	33-48
Front Bumper Nuts	60-80	44-59
Screw and Washer Assemblies, Bumper Bar-to-Front Bumper	19-25	14-18

Official Licensed Product
Ford Motor Company

SECTION 01-20 Restraints, Active

SUBJECT	PAGE
VEHICLE APPLICATION	01-20-1
DESCRIPTION AND OPERATION	
Occupant Restraint System	01-20-1
DIAGNOSIS AND TESTING	
Restraints, Active	01-20-2
Inspection and Verification	01-20-2
Symptom Chart	01-20-3
REMOVAL AND INSTALLATION	
Safety Belts, Front Seats	01-20-3
Retractor and Tongue with Shoulder Belt Height Adjuster	01-20-3
Retractor and Tongue Without Shoulder Belt Height Adjuster	01-20-3
Safety Belts, Rear Seats, SuperCab and Crew Cab	01-20-7
SERVICE PROCEDURES	
Safety Belt Lockup Functional Test Procedure	01-20-10
Safety Belt Procedure After a Collision	01-20-8
SERVICE PROCEDURES (Cont'd.)	
Safety Belt Retractor Unjamming Procedure	01-20-9
Safety Belt Tongue Rotated on Belt	01-20-9
Safety Belt Twisted at the Safety Belt Guide	01-20-9
Safety Belt with Anchor Plate Thread Damage	01-20-7
Safety Belt with No Anchor Plate Thread Damage	01-20-7
Shoulder Strap Adjuster with Stripped Weld Nuts, Front Seat	01-20-8
CLEANING AND INSPECTION	
Safety Belt Webbing	01-20-10
General Cleaning Method B	01-20-10
General Cleaning Method C	01-20-11
Spot Cleaning Method A	01-20-10
SPECIFICATIONS	01-20-11
SPECIAL SERVICE TOOLS/EQUIPMENT	01-20-12

VEHICLE APPLICATION

F-250 Heavy Duty, F-350 and F-Super Duty Chassis Cab

Official Licensed Product
Ford Motor Company

DESCRIPTION AND OPERATION

Occupant Restraint System

WARNING: ALL SAFETY BELT ASSEMBLIES INCLUDING RETRACTORS, BUCKLES, FRONT SAFETY BELT BUCKLE SUPPORT ASSEMBLIES (SLIDE BAR) (IF SO EQUIPPED), SHOULDER BELT HEIGHT ADJUSTERS (IF SO EQUIPPED), CHILD SAFETY SEAT TETHER ATTACHMENTS (IF SO EQUIPPED) AND RETAINING HARDWARE MUST BE INSPECTED BY A QUALIFIED TECHNICIAN AFTER ANY COLLISION. ALL BELT ASSEMBLIES MUST BE REPLACED UNLESS A QUALIFIED TECHNICIAN FINDS THE ASSEMBLIES TO SHOW NO DAMAGE AND TO OPERATE PROPERLY. BELT ASSEMBLIES NOT IN USE DURING A COLLISION MUST ALSO BE INSPECTED AND REPLACED IF EITHER DAMAGE OR IMPROPER OPERATION IS NOTED.

The combination lap/shoulder safety belts and lap safety belts are factory-installed in their proper locations. If the safety belts are removed for any reason, they must be installed as shown in this section.

When replacing safety belt buckles or retractor assemblies, use only the replacement parts specified in the Ford Customer Service Division Master Parts and Accessories Catalog for the vehicles serviced.

The outboard safety belt for the front and rear seats is a continuous-loop three-point system. The combination lap and shoulder belt (continuous-loop) uses a common sliding tongue and retractor.

These vehicles are equipped with dual locking mode retractors on the shoulder belt portion of the combination lap/shoulder safety belt for front seat passengers and rear seat outboard passengers.

The shoulder harness retractor is designed to let the webbing move freely in or out, except during vehicle hard braking, hard cornering or impact of 8 km/h (5 mph) or more. The combination lap/shoulder belt will become locked and help reduce your forward movement when retractor is automatically locked by a mechanically actuated inertia sensor, or if the retractor assembly belt has been fully extracted, and is in the "automatic locking mode."

Dual locking mode retractors operate in the following two ways.

Vehicle Sensitive (Emergency) Locking Mode

In this operating mode, the shoulder belt retractor will allow the occupant freedom of movement, locking tight only on hard braking, hard cornering or impacts of approximately 8 km/h (5 mph) or more. The front safety belt retractor can also be made to lock by pulling/jerking on the belt.

DESCRIPTION AND OPERATION (Continued)

Automatic Locking Mode

In this operating mode, the shoulder belt retractor will be automatically locked and remain locked when the combination lap / shoulder safety belt has been fully extracted and buckled. In this mode, the safety belt does not allow the occupant freedom of movement. This mode provides the following:

- a tight lap / shoulder belt fit on occupant
- child seat or infant carrier installation restraint

Automatic locking mode must be used when installing a child seat on the front passenger seat and rear outboard seats where dual locking retractors are provided.

To switch the retractor from the emergency locking mode to the automatic locking mode, perform the following steps:

1. Buckle the lap / shoulder combination belt.
2. Grasp the shoulder portion of the belt and pull downward until all of the belt is extracted. When allowed to retract, a clicking sound will be heard. At this time, the belt retractor is in the automatic locking mode.
3. A clicking sound will continue to be heard as the belt is allowed to retract.

When the combination lap / shoulder belt is unbuckled and allowed to retract completely, the retractor will switch back to the vehicle sensitive (emergency) locking mode.

DIAGNOSIS AND TESTING

Restraints, Active

Inspection and Verification

Verify the concern by operating the active restraint system to duplicate the vehicle owner's concern.

Check system fuses and operation of safety belt warning lamp. Check for bare, broken or misrouted wires. Make sure connections are tightly engaged. Inspect the safety belt webbing for integrity.

Official Licensed Product
Ford Motor Company

DIAGNOSIS AND TESTING (Continued)

Symptom Chart

ACTIVE RESTRAINTS

Condition	Possible Source	Action
• Safety Belt Warning Inoperative	• Fuse. • Circuitry. • Warning chime module.	• REFER to Section 13-09.

REMOVAL AND INSTALLATION

Safety Belts, Front Seats

Retractor and Tongue Without Shoulder Belt Height Adjuster

NOTE: Safety belt buckles, center adjust tongues and belt and retractor assembly can be replaced separately. However, if a safety belt assembly was in use during a collision, the belt and retractor must be replaced as well as the center adjust tongue and belt and buckle assembly or the center adjust tongue and the cable and buckle assembly. When replacing safety belt and buckles, safety cable and buckles, center adjust tongues and belt and retractors, use only the replacement parts specified in the Ford Master Parts Catalogs for the make and model of the vehicle being serviced. Safety belt assemblies must not be interchanged between vehicle models.

Removal

SPECIAL SERVICE TOOL(S) REQUIRED

Description	Tool Number
Safety Belt Bolt Bit (No. 50 Torx®)	T77L-2100-A

1. Remove shoulder strap guide cover.
2. Remove the upper anchor bolt attaching D-ring, using Safety Belt Bolt Bit (No. 50 Torx®) T77L-2100-A.
3. Remove bolt attaching front safety belt retractor and tongue assembly, using the Safety Belt Bolt Bit.
4. Remove the lower anchor bolt attaching front safety belt to front floor pan using the Safety Belt Bolt Bit.
5. Remove front safety belt retractor and tongue assembly.

Installation

1. Follow removal procedure in reverse order.
2. Check sealer around floor anchor bolt holes and add Ford Caulking Cord D6AZ-19560-A or equivalent meeting Ford specification ESB-M4G32-A.
3. Tighten anchor bolts to 35-45 N·m (26-33 lb-ft).
4. Check system operation.

Retractor and Tongue with Shoulder Belt Height Adjuster

Removal

1. Open front shoulder strap guide cover.
2. Remove front D-ring retaining nut using an M10 socket.
3. Remove trim panel.
4. Use Safety Belt Bolt Bit T77L-2100-A (No. 50 Torx®) to remove bolt retaining front safety belt retractor and tongue assembly.
5. Remove lower anchor bolt retaining front safety belt to front floorpan using Safety Belt Bolt Bit T77L-2100-A.
6. Remove front safety belt retractor and tongue assembly.

Installation

1. Follow removal procedure in reverse order.
2. Check sealer around floor anchor bolt holes, and add Ford Caulking Cord D6AZ-19560-A or equivalent meeting Ford specification ESB-M4G32-A.
3. Tighten anchor bolts to 35-45 N·m (26-33 lb-ft).
4. Check system operation.

Licensed Product Ford Motor Company

REMOVAL AND INSTALLATION (Continued)

Safety Belts, Front Bench Seats, F-250 Heavy Duty, F-350 Regular Cab Shown, F-350 Crew Cab, F-Super Duty Chassis Cab Similar

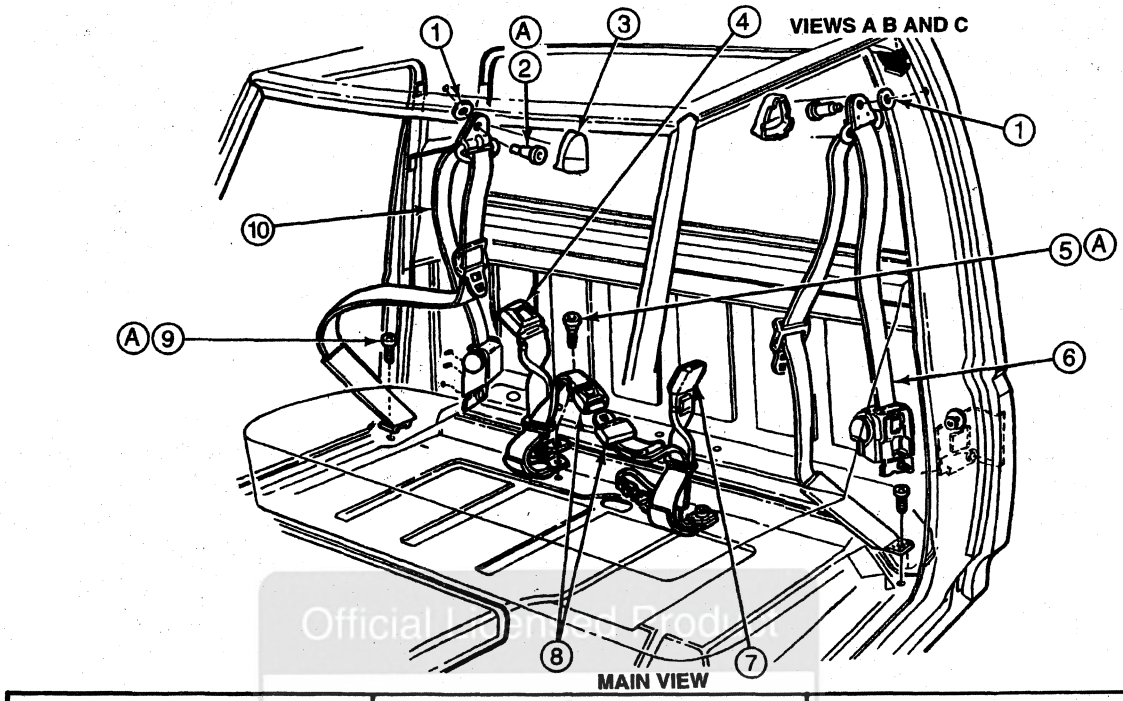

Item	Part Number	Description
1	N805266-S	Felt Washer
2	386392-S100	Anchor Bolt
3	60262	Shoulder Strap Guide Cover
4	61202	Front Safety Belt Buckle End (RH)
5	386274-S100	Anchor Bolt
6	611B09	Front Safety Belt Retractor and Tongue (LH)
7	61203	Front Safety Belt Buckle (LH)
8	611B60	Front Seat Center Passenger Safety Belt
9	386273-S100	Anchor Bolt

(Continued)

Item	Part Number	Description
10	611B08	Front Safety Belt Retractor and Tongue (RH)
11	602B82	Shoulder Safety Belt Height Adjuster
12	—	Bolt (Part of 602B82)
13	602B90	Height Adjuster Cover
14	60262	Shoulder Strap Guide Cover
15	N806773-S190	Nut
A	—	Tighten to 35-45 N·m (26-33 Lb-Ft)
B	—	Tighten to 30-40 N·m (22-30 Lb-Ft)
C	—	Tighten to 34-46 N·m (25-34 Lb-Ft)

Official Licensed Product Ford Motor Company

REMOVAL AND INSTALLATION (Continued)

Buckle End

NOTE: Safety belt buckles, center adjust tongues, and belt and retractor assemblies can be replaced separately. However, if a safety belt assembly was in use during a collision, the belt and retractor must be replaced as well as the center adjust tongue and belt and buckle assembly or the center adjust tongue and the cable and buckle assembly. When replacing safety belt and buckles, safety cable and buckles, center adjust tongues and belt and retractors, use only the replacement parts specified in the Ford Master Parts Catalogs for the make and model of the vehicle being serviced. Safety belt assemblies must not be interchanged between vehicle models.

Removal

1. If removing the driver side buckle end, disconnect the buckle end electrical connector.
2. Remove any trim necessary to access the safety belt buckle end anchor bolt.

Safety Belt Buckle End, Bench Seat, Typical

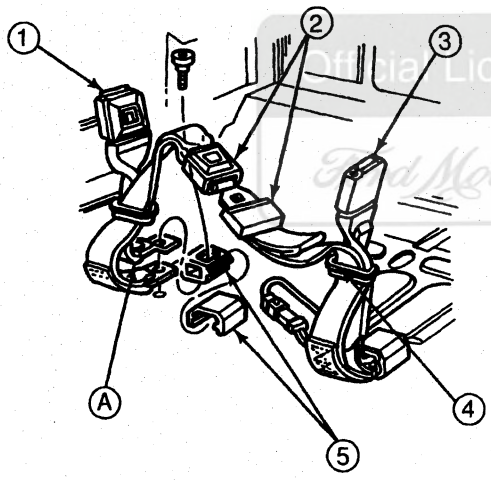

R11264-B

Item	Part Number	Description
1	61202	Safety Belt Buckle End (RH)
2	611B60	Front Seat Center Passenger Safety Belt
3	61203	Safety Belt Buckle End (LH)
4	602A12	Buckle End Guide Bezel
5	611B58	Buckle End Floor Trim (if Applicable)

(Continued)

Item	Part Number	Description
A	—	Offset Anchor Plate Must Be Installed on Top of Flat Anchor Plate

Safety Belt Buckle End with Center Bucket Seat, Typical

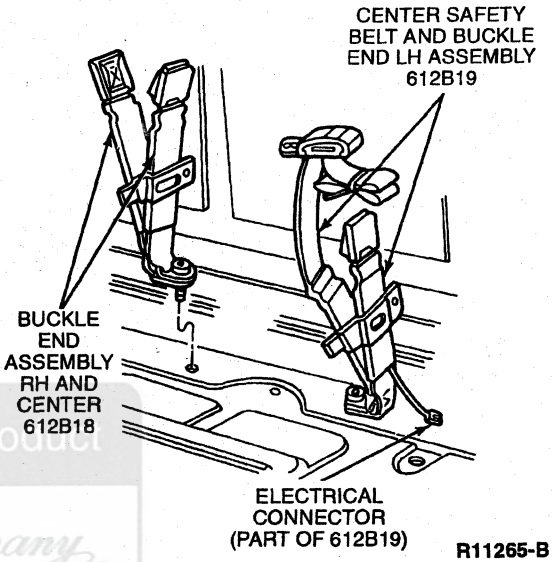

R11265-B

3. Remove the buckle end anchor bolt.
4. If necessary, remove the bracket retaining the buckle end to the bucket seat.
5. If necessary, thread the buckle end through the buckle end guide bezel.
6. Remove the safety belt buckle end from the vehicle.

Installation

1. NOTE: When the battery (10655) has been disconnected and reconnected, some abnormal drive symptoms may occur while the powertrain control module (PCM)(12A650) relearns its adaptive strategy. The vehicle may need to be driven 16 km (10 miles) or more to relearn the strategy.

   Follow removal procedure in reverse order.
2. Seal the anchor bolt hole with Ford Caulking Cord D6AZ-19560-A.
3. Tighten the anchor bolt to 35-45 N·m (26-33 lb-ft).
4. Check the restraint system for proper operation.

Official Licensed Product Ford Motor Company

REMOVAL AND INSTALLATION (Continued)

Safety Belts, Front, F-Series SuperCab with Captain's Chairs Shown, F-250 Heavy Duty and F-350

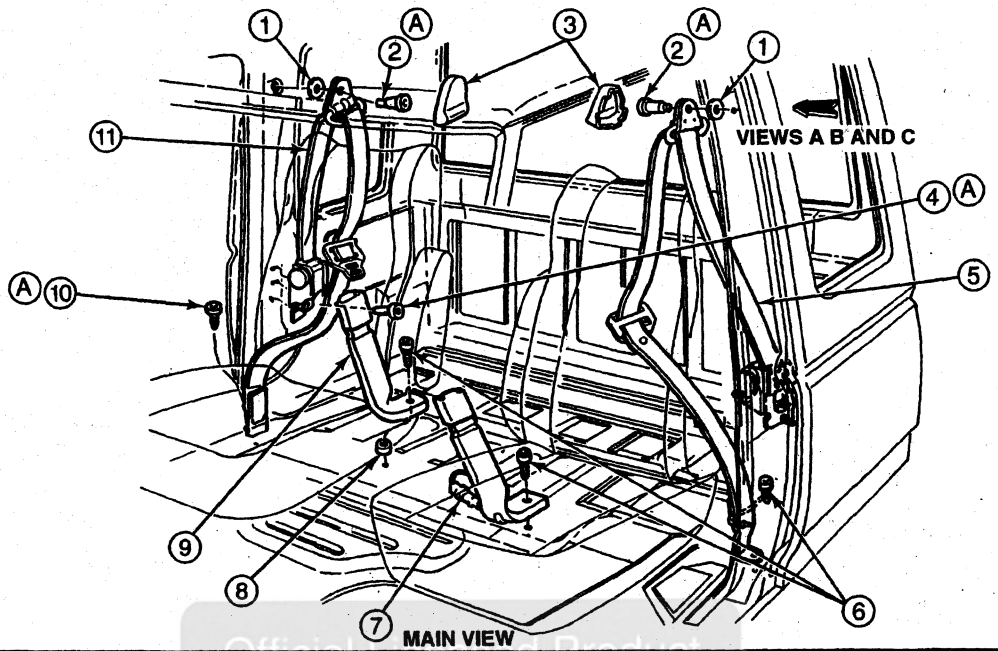

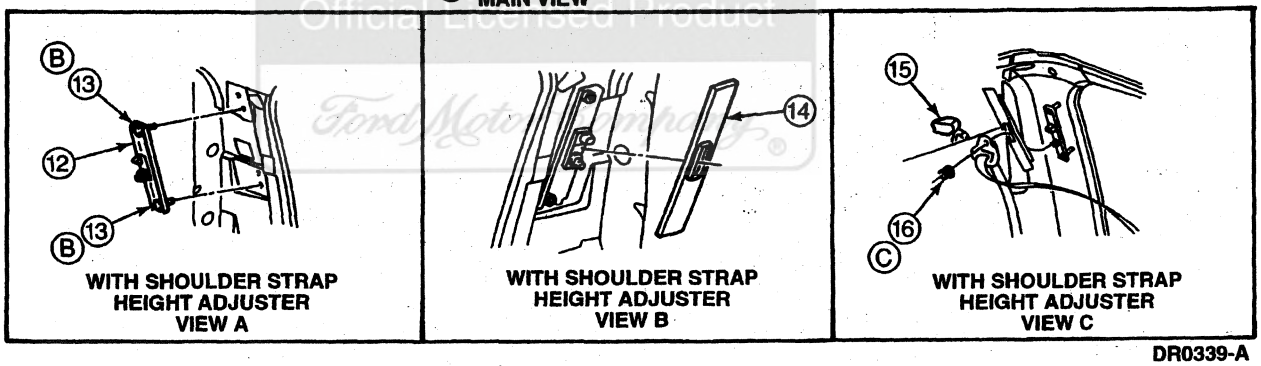

DR0339-A

Item	Part Number	Description
1	N805266-S	Felt Washer
2	386392-S100	Upper Anchor Bolt
3	60262	Shoulder Strap Guide Cover
4	389370-S100	Retractor Anchor Bolt
5	611B09	Front Safety Belt Retractor and Tongue (LH)
6	386274-S100	Floor Anchor Bolt
7	61203	Front Safety Belt Buckle End (LH)
8	387194-S	Washer (1 Each Side)
9	61202	Front Safety Belt Buckle End (RH)
10	386273-S100	Floor Anchor Bolt

(Continued)

Item	Part Number	Description
11	611B08	Front Safety Belt Retractor and Tongue (RH)
12	602B82	Shoulder Safety Belt Height Adjuster
13	—	Bolt (Part of 602B82)
14	602B90	Height Adjuster Cover
15	60262	Shoulder Strap Guide Cover
16	N806773-S190	Nut
A	—	Tighten to 35-45 N·m (26-33 Lb-Ft)
B	—	Tighten to 30-40 N·m (22-30 Lb-Ft)
C	—	Tighten to 34-46 N·m (25-34 Lb-Ft)

Official Licensed Product Ford Motor Company

REMOVAL AND INSTALLATION (Continued)

Safety Belts, Rear Seats, SuperCab and Crew Cab

Removal

1. Pull off the shoulder strap guide cover.
2. Remove the upper anchor bolt.
3. Remove the side panel anchor bolt.
4. Pull off the corner trim panel enough to access the retractor anchor bolt.
5. Remove the retractor anchor bolt.

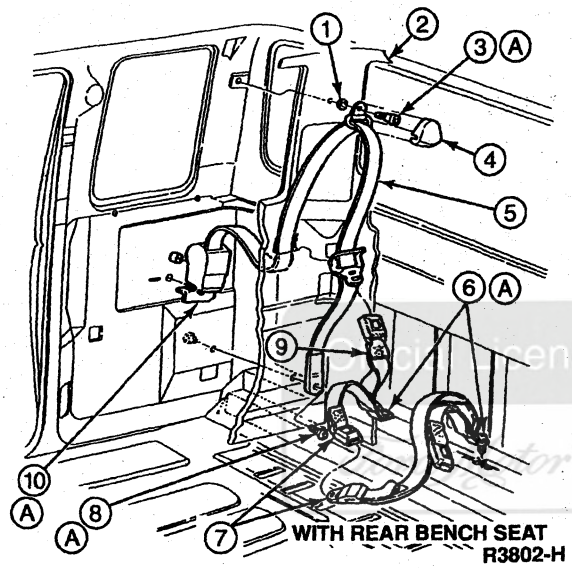

WITH REAR BENCH SEAT
R3802-H

Item	Part Number	Description
1	N805266-S	Felt Washer
2	60230	Corner Trim Panel
3	386392-S100	Bolt, Upper Anchor
4	60262	Shoulder Strap Guide Cover
5	611B68	Safety Belt Retractor and Tongue (RH)
6	—	Bolt, Floor Anchor (Part of 611B66)
7	611B66	Center Passenger Belt
8	386274-S100	Bolt, Side Panel Anchor
9	—	Buckle End (Part of 611B66)
10	—	Bolt, Retractor Anchor (Part of 611B68)
A	—	Tighten to 35-45 N·m (26-33 Lb-Ft)

6. NOTE: Safety belt buckles, center adjust tongues, and belt and retractor assemblies can be replaced separately. However, if a safety belt assembly was in use during a collision, the belt and retractor must be replaced as well as the center adjust tongue and belt and buckle assembly or the center adjust tongue and the cable and buckle assembly. When replacing safety belt and buckles, safety cable and buckles, center adjust tongues and belt and retractors, use only the replacement parts specified in the Ford Master Parts Catalogs for the make and model of the vehicle being serviced. Safety belt assemblies must not be interchanged between vehicle models.

   Feed the belt, tongue and D-ring down through the corner trim panel and remove the rear safety belt retractor and tongue from the vehicle.

Installation

1. Follow removal procedure in reverse order. Use Ford Caulking Cord D6AZ-19560-A or equivalent meeting Ford specification ESB-M4G32-A to seal floor anchor holes.
2. Tighten all anchor bolts to 35-45 N·m (26-33 lb-ft).
3. Check the restraint system for proper operation.

SERVICE PROCEDURES

Safety Belt with No Anchor Plate Thread Damage

1. Remove damaged anchor reinforcement bolt and discard.
2. Install a new bolt with the same part number as indicated in the Parts Replacement Chart in the Specifications portion of this section. Tighten to 35-45 N·m (26-33 lb-ft).

Safety Belt with Anchor Plate Thread Damage

1. Remove the broken or stripped bolt and discard.
2. Drill out the internal threads in the safety belt anchor plate with a 27/64-inch drill.
3. Rethread the safety belt anchor plate with a 1/2-13 tap.
4. Blow out the chips.
5. Install the attachment parts in the sequence shown. Refer to applicable illustration. Tighten the replacement bolt to 35-45 N·m (26-33 lb-ft). Original parts are to be replaced with the repair parts indicated in the safety belt parts replacement guides. Refer to the Parts Replacement Chart in the Specifications portion of this section. Unless specified in the guides, use original parts.

SERVICE PROCEDURES (Continued)

6. When repairing a multiple belt and attachment, install nut 382599-S100 to the bolt in the tunnel area from the underside of the floorpan. Tighten to 35-45 N·m (26-33 lb-ft).

Shoulder Strap Adjuster with Stripped Weld Nuts, Front Seat

1. NOTE: If the two hex-head retaining bolts on shoulder safety belt height adjuster (602B82) are not stripped, install shoulder safety belt height adjuster to the body structure. If the front seat shoulder strap adjuster bolts are stripped, replace the shoulder safety belt height adjuster and install it to the body structure.

   With the B-pillar interior trim panel removed, drill out the damaged threads in the upper B-pillar structure using a 1/2-inch drill.

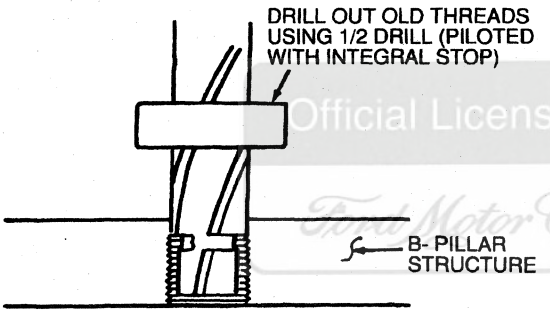

R8032-B

2. Apply a suitable lubricant to the threads of an M14 x 1.5 tap and tap new threads.
3. NOTE: After each rotation, back tap off slightly to remove new cuttings and be sure to blow out any chips before performing this step.

   NOTE: The drive kees on the insert will act as an automatic stop.

   Select a thread insert (Part No. N807170-190) and hand-screw it into the retapped hole until it is slightly below the surface of the hole.

Tap Hole

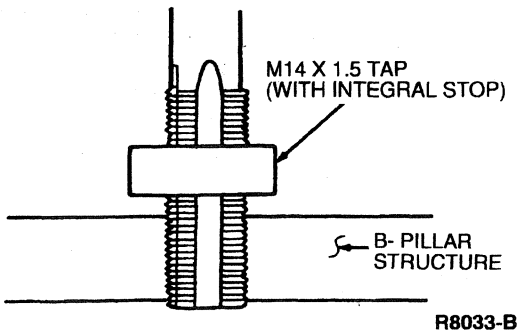

R8033-B

Install Thread Insert

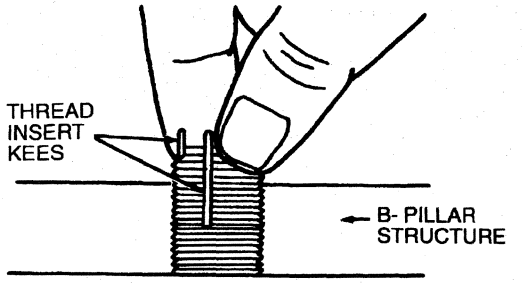

AR0045-A

4. After installation of the thread insert (Part No. N807170-190) use a 12-ounce hammer to lightly tap an installation tool several times to drive down the insert kees.

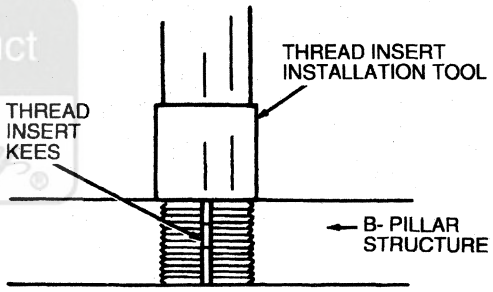

AR0046-A

Safety Belt Procedure After a Collision

WARNING: ALL SAFETY BELT ASSEMBLIES INCLUDING RETRACTORS, BUCKLES, FRONT SAFETY BELT BUCKLE SUPPORT ASSEMBLIES (SLIDE BAR) (IF SO EQUIPPED), SHOULDER BELT HEIGHT ADJUSTERS (IF SO EQUIPPED), CHILD SAFETY SEAT TETHER ATTACHMENTS (IF SO EQUIPPED) AND RETAINING HARDWARE SHOULD BE INSPECTED AFTER ANY COLLISION. ALL BELT ASSEMBLIES SHOULD BE REPLACED UNLESS A QUALIFIED TECHNICIAN FINDS THAT THE BELTS SHOW NO DAMAGE AND OPERATE PROPERLY. BELT ASSEMBLIES NOT IN USE DURING A COLLISION SHOULD ALSO BE INSPECTED AND REPLACED IF EITHER DAMAGE OR IMPROPER OPERATION IS NOTED.

Safety belt assemblies should be periodically inspected to make sure they have not become damaged and are in proper operating condition, particularly if subjected to severe stress.

Official Licensed Product
Ford Motor Company

SERVICE PROCEDURES (Continued)

Before installing the new safety belt assembly, the safety belt attaching areas must be inspected for damage and distortion. If the attaching points are damaged and distorted, the sheet metal must be worked back to its original shape and structural integrity.

Install the new safety belt(s) using the appropriate instructions. Perform Safety Belt Lockup Functional Test Procedure in the Service Procedures portion of this section.

Safety Belt Twisted at the Safety Belt Guide

NOTE: These procedures affect both wire-formed and stamped D-ring designs.

1. Grasp the belt webbing at shoulder belt guide (D-ring).
2. Rotate and fold the belt webbing over itself and pull through D-ring to remove the twist.

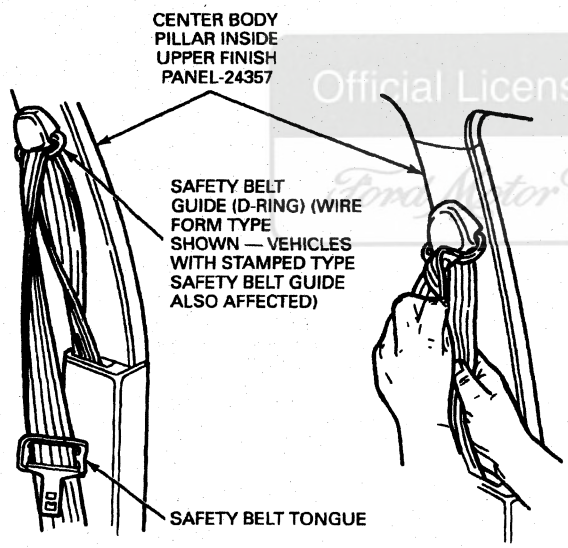

FRONT DRIVER'S SEAT SHOULDER SAFETY BELT SHOWN — ALL OTHER OUTBOARD SHOULDER SAFETY BELTS TYPICAL.

R9487-A

Safety Belt Tongue Rotated on Belt

1. Grasp the belt tongue and pull down on the closest webbing to form a loop through the upper (narrow and longer) slot in the tongue.
2. Working the webbing through the upper slot, rotate and fold the belt webbing over itself as required to remove the twist.
3. Pull the excess webbing back through the upper slot in the tongue.

4. Repeat the above steps to complete the removal of the twist through the lower (wider and larger) slot in the tongue.

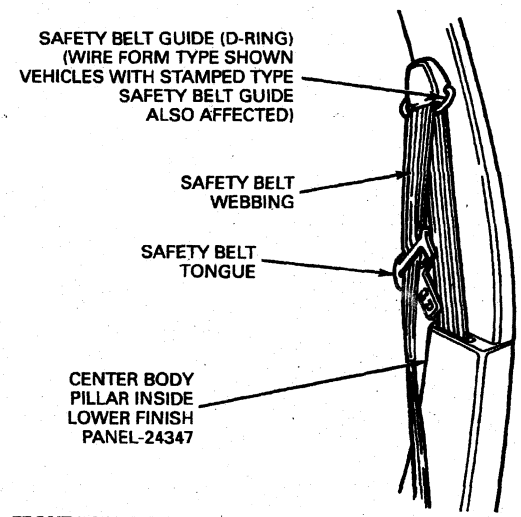

FRONT DRIVER'S SEAT SHOULDER SAFETY BELT SHOWN — ALL OTHER OUTBOARD SHOULDER SAFETY BELTS TYPICAL.

R9488-A

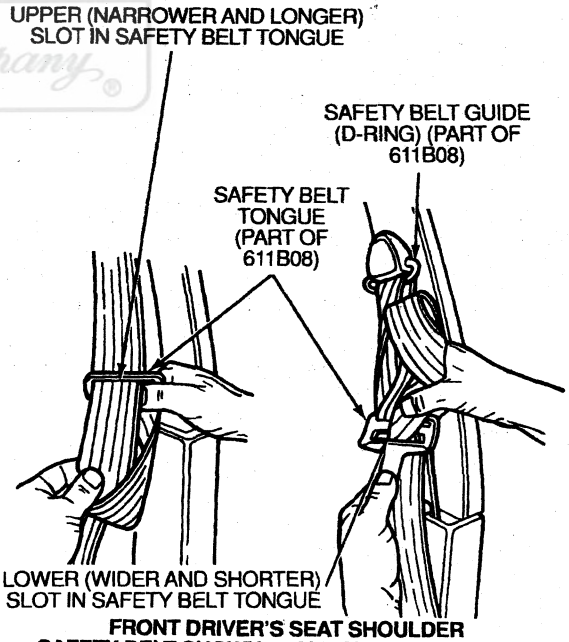

FRONT DRIVER'S SEAT SHOULDER SAFETY BELT SHOWN — ALL OTHER OUTBOARD SHOULDER SAFETY BELTS TYPICAL R9489-B

Safety Belt Retractor Unjamming Procedure

If the safety belt retractor should become jammed by allowing the belt to retract when it is twisted, the webbing can be freed using this procedure.

Official Licensed Product Ford Motor Company

SERVICE PROCEDURES (Continued)

1. Pull on the belt with both hands to tighten it on the retractor spool.
2. Feed the belt back into the retractor until it is completely retracted. Repeat previous step if necessary.
3. Pull the belt out of the belt retractor as far as it will go and untwist the belt or remove the object that is jamming the belt. Let the belt retract.
4. Pull the belt out and let it retract several times to make sure the belt works properly.

Safety Belt Lockup Functional Test Procedure

1. Driver will buckle up and proceed to a safe test area. If RH front or rear passenger safety belt must be tested, a passenger should be buckled into RH front or rear seat. (The RH front belt can be tested using a driver only, providing driver has the ability to grasp RH front shoulder belt and extend it approximately 66 cm (26 inches) with no compromise to safe driving). This method applies to 8 km/h (5 mph) test only.
2. After reaching a safe area to perform sudden stops, driver will attain a speed of approximately 8 km/h (5 mph). The driver should advise the passenger (if applicable) to prepare for a severe brake application. At this time, both driver and passenger should grasp their respective shoulder safety belts and prepare to lean slightly forward at the moment brake application is made.
3. **WARNING: THE DRIVER AND PASSENGER MUST BE PREPARED TO BRACE THEMSELVES IN THE EVENT THE RETRACTOR DOES NOT LOCK.**

   The driver will make a maximum brake application without tire skid. (The maximum brake application should be on dry concrete or equivalent hard road surface; never on a wet or gravel road.)
4. The driver and passenger should lean forward slightly into shoulder safety belt. At this instant, belts should lock up without any noticeable webbing payout.
5. If there is a lockup of both shoulder belts, safety belt assemblies are functioning properly.
6. NOTE: If the retractor of a new safety belt assembly has been bolted into a damaged or distorted mounting area, the new retractor could be warped and may not function. If this is the case, reshape the sheet metal and install another new complete safety belt assembly.

   Should either or both retractors fail to lock up at the 8 km/h (5 mph) speed, repeat the test at a constant 24 km/h (15 mph). (This test must be performed with a driver and passenger if both front retractors are to be tested.)
7. If either or both shoulder safety belts do not lock up at 24 km/h (15 mph) test, return vehicle for service of malfunctioning safety belts. Remove retractor and rework sheet metal in retractor's mounting area, if necessary. Install retractor assembly and retest safety belt assembly(s) as previously stated.

CLEANING AND INSPECTION

Safety Belt Webbing

WARNING: DO NOT BLEACH OR DYE THE WEBBING. BLEACH AND DYE CAN WEAKEN WEBBING.

Clean the safety belt webbing with a mild soap solution recommended for cleaning upholstery or carpets. Follow instructions provided with soap.

Spot cleaning as described in Method A will be sufficient when the area is not excessively soiled. In the event of severe soiling or staining, clean the entire safety belt webbing to avoid a "ring" condition.

Spot Cleaning Method A

For stains from grease, oil, tar, water spotting, crayon, and lipstick.

1. Remove excess staining material from the fabric by scraping or wiping with a clean cloth.
2. Identify the staining material if possible.
3. NOTE: Using other than recommended cleaners or procedures may affect flammability or fabric appearance.

   Spray the stain with Ford Extra Strength Upholstery Cleaner E8AZ-19523-AA or use equivalent commercial product.
4. Allow the spot lifter to dry completely until it forms a white powder on the surface of the fabric.
5. Brush and vacuum the white powder from the fabric.
6. If the soiled spot is not removed from the fabric, repeat Steps 1 through 5 as necessary.
7. Wipe the cleaned area with a damp cloth to remove any residual cleaner.

General Cleaning Method B

For stains such as grease, oil, tar, adhesive, crayon and lipstick.

1. Remove excess staining material from the fabric by scraping or wiping with a clean cloth.
2. Identify the staining material if possible.
3. If stain is still visible after the spot cleaning procedure (Method A), blot the soiled area with a clean cotton cloth saturated with Ford Spot and Stain Remover F3AZ-19521-WA or use equivalent commercial product.
4. Rub in a circular motion while continuously exposing the clean portion of cloth.

CLEANING AND INSPECTION (Continued)

5. Gradually widen the area of application onto the edges of the safety belt.
6. Repeat Steps 1 through 5 as necessary.
7. Wipe the cleaned area with a clean, damp cloth to remove any residual cleaner.

General Cleaning Method C

For stains from dirt, soil, food, soft drinks, and coffee.

1. Remove excess staining material from the fabric by scraping or wiping with a clean cloth.
2. Identify the staining material if possible.
3. Apply Rosenthal or Bissell or equivalent upholstery cleaner with cloth or brush as directed by instructions on container.
4. Rub in a circular motion until the stain is removed.
5. Gradually widen the area of application to the edges of the safety belt.
6. Repeat Steps 1 through 5 as necessary.
7. Rub the cleaned area with a damp cloth to absorb residual cleaner.
8. Allow the safety belt webbing to dry at room temperature.

SPECIFICATIONS

PARTS REPLACEMENT CHART

Original Parts			Replacement Parts		
Part No.	Code Letter[a]	Part Name	Part No.	Code Letter[a]	Part Name
386273-S100	IA	Bolt — 7/16-20 x 1.38 Pan Head Tapping	383531-S36	X	Bolt — 1/2-13 x 1.38 Pan Locking
386274-S100	IB	Bolt — 7/16-20 x 1.75 Pan Head Tapping (0.50 Shoulder)	383753-S36	Y	Bolt — 1/2-13 x 1.75 Pan Locking (0.50 Shoulder)
382629-S100	—	Washer — 0.463/0.443 I.D. Plate (1.80 Dia. .190 Thick)	382552-S100	—	Washer — 1/2 Flat (1.30 Dia. 0.190 Thick)
382583-S100	—	Washer — 1/2 Serrated (0.18 Thick)	382533-S100	—	Washer — 1/2 Flat (0.25 Thick)
386272-S100	IF	Bolt — 7/16-20 x 0.88 Pan Head Tapping	383437-S36	W	Bolt — 1/2 x 13 Pan Locking
386276-S100	IL	Bolt — 7/16-20 x 1.75 Pan Shoulder Tapping (0.75 Shoulder)	383754-S36	Z	Bolt — 1/2-13 x 2.25 Pan Locking (0.88 Shoulder)
386277-S100	IK	Bolt — 7/16-20 x 1.38 Pan Shoulder Tapping (0.50 Shoulder)	385709-S	T	Bolt — 1/2-13 x 1.38 Pan Head Shoulder Locking
382580-S100	—	Washer — 7/16	—	—	—
386392-S100	IG	Bolt — Pan Head Tapping (7/16-20 x 2.15)	383754-S36	Z	Bolt — 1/2-13 x 2.25 Pan Locking (0.88 Shoulder)
384966-S100	V	Bolt — 7/16-20 x 1.75 Pan Head Tapping	—	—	—
389370-S100	IM	7/16 x 20 x 1.15	389478-S190	U	1/2 x 13 x 1.15
N620482-S100	S14	Nut — M12 x 1.75	—	—	—
882599-S100	—	Nut	—	—	—
N806773-S190	—	Nut — M10 x 1.5	—	—	—

a Identification letter on top of bolt head or face of spacer.

NOTE: Bolt torque must be maintained at 35-45 N·m (26-33 lb-ft).

LUBRICANT/ADHESIVE/CLEANER SPECIFICATIONS

Description	Part Number	Ford Specification
Ford Caulking Cord	D6AZ-19560-A	ESB-M4G32-A
Extra Strength Upholstery Cleaner	E8AZ-19523-AA	—
Spot and Stain Remover	F3AZ-19521-WA	—

TORQUE SPECIFICATIONS

Description	N·m	Lb-Ft
Safety Belt Anchor Bolts	35-45	26-33
Shoulder Safety Belt Height Adjuster Bolts	30-40	22-30

SPECIAL SERVICE TOOLS/EQUIPMENT

SPECIAL SERVICE TOOLS REQUIRED

Tool Number/ Description	Illustration
T77L-2100-A Safety Belt Bolt Bit (No. 50 Torx®)	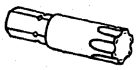 T77L-2100-A

Official Licensed Product
Ford Motor Company®

GROUP

FRAME AND MOUNTING 02

SECTION TITLE	PAGE
BODY MOUNTING	02-02-1
FRAME	02-01-1

SECTION 02-01 Frame

Official Licensed Product Ford Motor Company

SUBJECT	PAGE
VEHICLE APPLICATION	02-01-1
REMOVAL AND INSTALLATION	
Frame and Crossmembers	02-01-1
SERVICE PROCEDURES	
Diagonal or X-Frame Checking Method	02-01-4
Frame Extension	02-01-5
Frame Inspection	02-01-4
Frame Service	02-01-4
Drilling Precautions	02-01-4
Frame Member Replacement	02-01-5
Frame Reinforcing	02-01-4
SERVICE PROCEDURES (Cont'd.)	
Frame Straightening	02-01-4
Frame Strength Identification	02-01-4
Weld Attachment	02-01-5
Welding Precautions	02-01-4
Frame Side Rail to Rear Shock Bracket	02-01-5
Steering Gear Frame Liner Service, F-350	02-01-6
Rivet Removal and Replacement	02-01-6
SPECIFICATIONS	02-01-8
SPECIAL SERVICE TOOLS/EQUIPMENT	02-01-8

VEHICLE APPLICATION

F-250 Heavy Duty, F-350 and F-Super Duty

REMOVAL AND INSTALLATION

Frame and Crossmembers

NOTE: F-Super Duty Motorhome Chassis crossmember numbering differs from F-250 Heavy Duty and F-350 crossmember numbering. When replacing crossmembers on these vehicles, make sure to specify the correct crossmember location. For crossmember part numbers, refer to the Light Truck Master Parts and Accessories Catalog.

The following illustrations serve as guides to the removal and installation of frame (5005) and crossmembers.

REMOVAL AND INSTALLATION (Continued)

Frame and Crossmembers, F-250 Heavy Duty, F-350 and F-Super Duty Chassis Cab

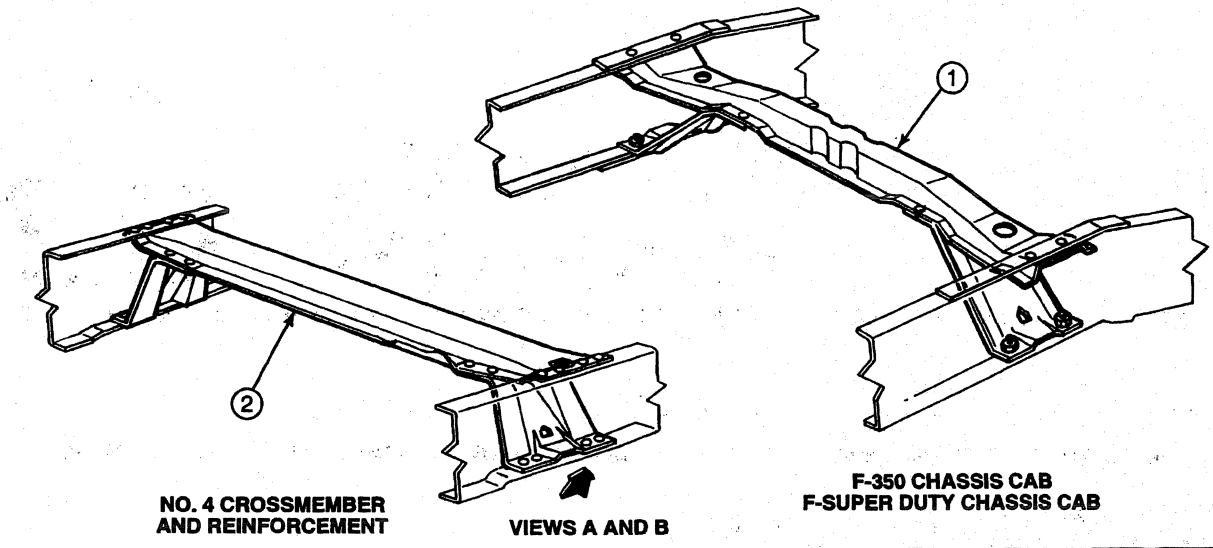

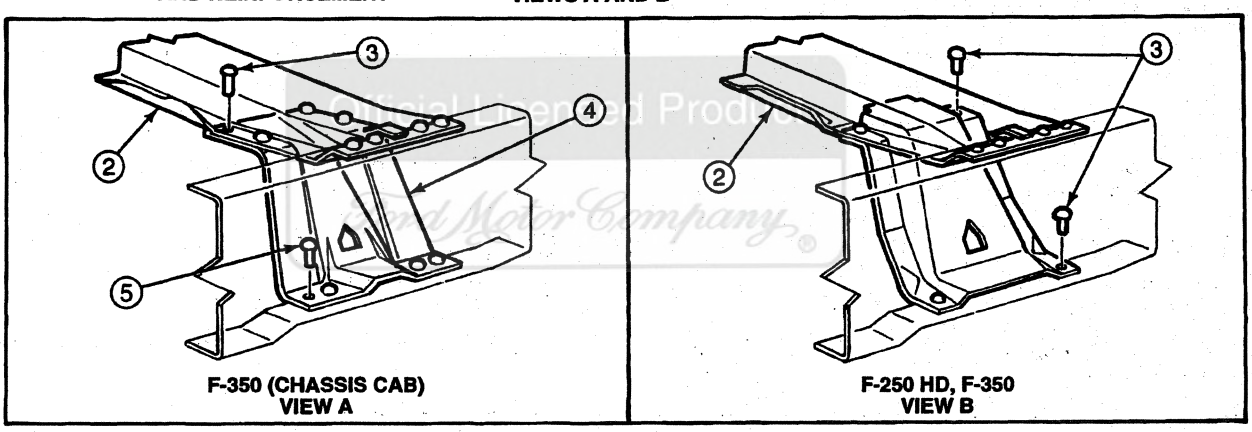

DF0063-A

Item	Part Number	Description
1	5028	Crossmember, No. 3
2	5030	Crossmember, No. 4
3	N647096	Rivet

(Continued)

Item	Part Number	Description
4	5135	Crossmember, No. 4 Reinforcement
5	N647097	Rivet

REMOVAL AND INSTALLATION (Continued)

Frame and Crossmembers, F-Super Duty Motorhome Chassis

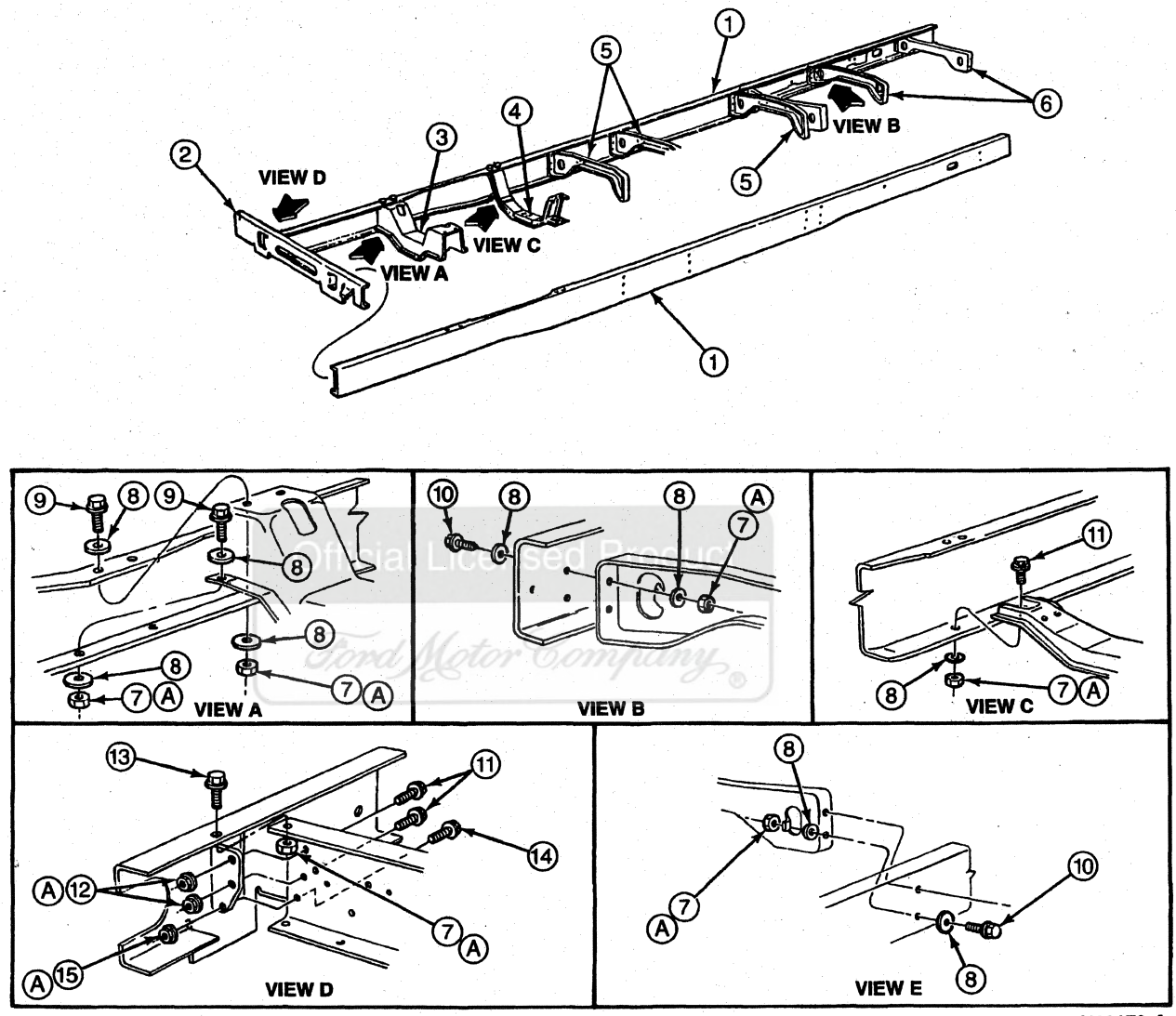

N13170-A

Item	Part Number	Description
1	5005	Frame Side Rail
2	5020	Crossmember
3	5026	Crossmember
4	5028	Crossmember
5	5030	Crossmember
6	5C054	Crossmember
7	N620469-S2	Nut
8	N630089-S	Washer

(Continued)

Item	Part Number	Description
9	N601798-S2	Bolt
10	N601414-S100	Bolt
11	N605829-S2	Bolt
12	N620484-S2	Nut
13	N802114-S2	Bolt
14	N605804-S2	Bolt
15	N620482-S2	Nut
A	—	Tighten to 60-80 N·m (44-59 Lb-Ft)

SERVICE PROCEDURES

Frame Inspection

Misalignment of frame (5005) is the result of damaged components.

Before checking frame alignment, inspect all frame members for damage, cracks, twists, or bends.

Check all welded connections for cracks. Inspect all rivets, bolts, and body support brackets for looseness.

Make all necessary repairs or replacements.

Diagonal or X-Frame Checking Method

NOTE: An alternate method of checking frame alignment is to use a frame gauge.

Frame alignment can be checked without removing the body from the frame (5005) by using the diagonal or X-frame checking method.

This method should be used to identify misalignment prior to any attempt to straighten a frame.

1. Place the vehicle on a clean, level floor and set the parking brake.
2. Select at least four points along the left frame side rail (5015) and transfer these points to the floor with a plumb bob. If desired, paper can be taped on the floor along both sides of the vehicle below the frame. Mark the points on the floor as accurately as possible.
3. Locate the corresponding points along the right frame side rail (5016) and transfer these points to the floor in the same manner.
4. Move the vehicle away from the marks on the floor, and measure diagonally between all points on the floor. Both measurements should be equal within 6.35 mm (1/4 inch).
5. Measure between corresponding points parallel to the frame side rails. These measurements should be within 3.18 mm (1/8 inch) of each other.

The squareness of the frame side rail web to the floor at the spring hangers and at the steering gear mounting location should be within 1.59 mm (1/16 inch). The squareness of the frame side rail web to the floor at all other points should be within 3.18 mm (1/8 inch). The web and flange should be square at all other points within 3.18 mm (1/8 inch).

Any point on one side rail should be within 3.18 mm (1/8 inch) ahead, behind, above, or below the corresponding point on the opposite side rail. The frame side rail should not be bowed more than 3.18 mm (1/8 inch) for each 2540 mm (100 inches) of frame length. The overall width of the frame should not vary more than 3.18 mm (1/8 inch).

An alternate method of checking frame alignment is to use Rotunda Laser Measuring System 190-01025 or equivalent.

Frame Service

Drilling Precautions

CAUTION: Do not drill holes in the frame flanges. This will reduce the strength of frame (5005).

If a hole must be drilled in the frame, make sure that it meets all of the following requirements:

1. The hole is located in the upper half of the frame.
2. The edge of the drilled hole and the edge of the nearest hole are at least 25 mm (1 inch) apart.
3. The edge of the drilled hole is at least 25 mm (1 inch) from the edge of the flange.
4. The drilled hole is not adjacent to any other existing brackets or components of frame.

Welding Precautions

CAUTION: Disconnect the battery ground cable (14301) before using any electric welding equipment.

All welding on frame must be done with electric welding equipment, and the heat should be kept in a small area to prevent change in hardness of the metal. Do not use gas welding equipment. A double reinforcement must be added to frames where heat or weld is applied to the area to be repaired. The welds are to run lengthwise along the reinforcement when a reinforcement is to be welded to the frame side rail.

Frame Strength Identification

F-Series and F-Super Duty Chassis Cab use a 36,000 psi steel frame.

Frame Straightening

Misalignment of frame can be corrected by straightening the out-of-line parts or by replacing the crossmembers, braces, or brackets if they are badly damaged.

WARNING: DO NOT STRAIGHTEN FRONT FRAME RAIL CONVOLUTES.

CAUTION: If heat is needed to straighten a frame member, keep the temperature below 649°C (1200°F) (a dull red glow). Excessive heat can weaken the metal in the frame members and cause permanent damage.

Straightening should be attempted on frames that fail to meet specifications of the diagonal checking method or where damage is visually apparent.

However, to prevent internal stresses in the metal, frame straightening should be limited to parts that are not severely bent.

Frame Reinforcing

After a bent frame member has been straightened, inspect the member closely for cracks. If any cracks show, the frame member should be reinforced or replaced.

SERVICE PROCEDURES (Continued)

Reinforcements should be made from angle or flat stock of the same material and thickness as the frame member being reinforced, and should extend a minimum of 152.40 mm (6 inches) to either side of the crack. Ideally, the reinforcement should be cut from the corresponding area of a similar frame.

Weld Attachment

To ensure a quality repair, adhere to the following procedure if it is necessary to weld reinforcements to the frame.

1. Wire brush the area around the crack to remove the paint, grease, mud, etc., and to expose the crack completely and ensure good weld adhesion.
2. To stop the crack from spreading, drill a 6.35 mm (1/4-inch) hole at a point 12 mm (0.50 inch) beyond the root of the crack.
3. Grind out the full length of the crack to the hole to form a V-shaped slot with the base of the V-slot contacting the reinforcement.
4. The base of the V-slot should have at least a 1.52-mm (0.06-inch) opening to ensure weld penetration to the reinforcement when welding the crack.
5. Drill clearance holes in the reinforcements to clear rivet heads and bolt heads or nuts where necessary.
6. In the event that repair is required on more than one frame surface (i.e., a flange crack that extends into the web), two pieces of flat stock (one for each surface) should be used and welded together where they join. The web reinforcement should be a minimum of 76.20 mm (3.0 inches) high and have a 63.50-mm (2.5-inch) radius at each of the two corners.
7. Completely clean the surface of frame under and around the reinforcements.
8. Clamp the reinforcements securely to the frame prior to welding.
9. Weld the reinforcement all around after welding the crack V-slot.
10. The flange edge weld should be ground smooth after all pit holes have been filled by the weld.
11. If a damaged bolted-on frame bracket is to be replaced, the new bolts, washers, and nuts should be of the same specifications and bolt torques as the original parts.
12. In cases where it is necessary to remove rivets, replace them with Property Class 9.8 metric (Grade 8) nuts, bolts and washers of the next larger size (i.e., for 3/8-inch diameter rivets use 7/16-inch bolts, for 7/16-inch diameter rivets use 1/2-inch bolts). This requires line drilling of the holes to the same diameter as the new bolt (i.e., either 0.437 diameter or 0.500 diameter).

Frame Member Replacement

If a damaged frame member is to be replaced, new bolts, Property Class 9.8 metric (Grade 8) fasteners and rivets required for replacement of parts should be of the same specifications as the original bolts or rivets. In cases where it is necessary to substitute a bolt for a rivet, use the next larger size bolt.

Frame Extension

For the recommended installation of frame extensions for mounting optional longitudinal spacers, refer to the Ford Truck Body Builders Layout Book.

Frame Side Rail to Rear Shock Bracket

Cracks may develop in the frame side rail (5015) at the rear shock absorber bracket rivets if the vehicle is used for continuous off-road service. If it is determined that a repair must be made, a reinforcement kit (F0TA-5L005-BA) for repair of frame (5005) is available.

1. Position the vehicle on supports. Remove rear wheels and inspect rear shock absorber bracket (18192) for cracks or damage.
2. Disconnect rear shock absorber (18125) from upper and lower mounting points. Locate the crack and clean the surface. A crack that has traveled past the midpoint of the side rail bend radius should not be repaired; a new frame is required. Refer to Frame Member Replacement in this section. If the crack has not traveled past the midpoint of the side rail bend radius, the frame can be repaired. Use the following procedure for repair.
3. Remove any tubes (2265) in the damaged area.
4. Remove three rivets attaching rear shock absorber bracket to frame side rail. Use the following procedure to remove rivets.
   a. Drill a 3-mm (1/8-inch) hole through rivet.
   b. Drill same hole with a 9-mm (11/32-inch) drill through shank.
   c. Use an air chisel to remove head.
   d. Drive out rivet with a punch.
5. Clean affected area with a wire brush.
6. To repair, drill a 5-mm (3/16-inch) hole at the crack termination into the side rail.
7. Grind out a groove along the crack, top and bottom, one quarter of metal thickness deep.
8. Run a continuous weld along groove. Weld direction is away from hole. Weld both sides and fill crack termination hole.
9. Grind all weld deposits flush with side rail metal.
10. Place the reinforcement plate over the outside of the side rail.

Official Licensed Product Ford Motor Company

SERVICE PROCEDURES (Continued)

11. Drilling from the inside out, use the rear shock absorber bracket holes in the frame side rail as a guide and line drill through the frame side rail and plate with a 12 mm drill bit. Drill the rear shock absorber bracket mounting holes to 12 mm (1/2 inch).
12. Install the rear shock absorber bracket using 12-mm (1/2-inch) fasteners and nuts. Place bolt head to outside, nut to inside of frame rail. Tighten to 118-122 N·m (88-89 lb-ft).
13. NOTE: Refer to the instruction sheet in the frame reinforcement kit for proper weld locations.

    Weld plate to rail.
14. Paint repaired area after cooling. Reinstall the rear shock absorber. Install the wheel and remove vehicle from supports.

Steering Gear Frame Liner Service, F-350

Cracks can appear in the frame (5005) at the frame side rail (5015) near the steering gear (3504) or steering gear bolt heads, or in the steering gear frame liner.

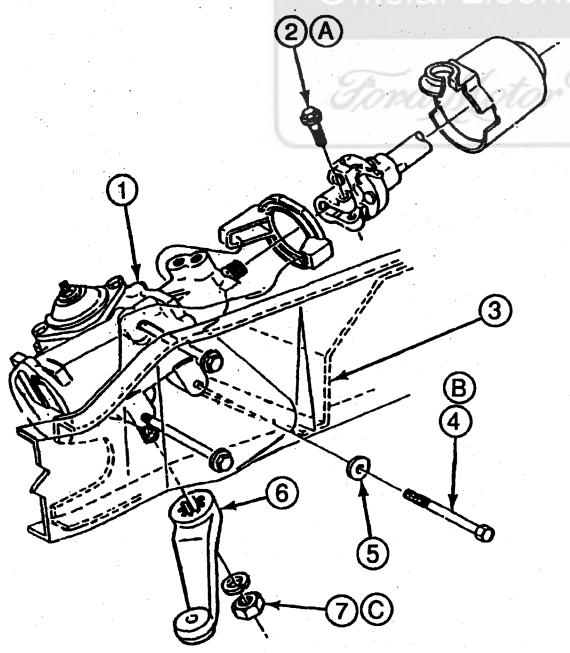

GEAR LINER TO FRAME RIVET REPAIR
N9221-D

Item	Part Number	Description
1	3504	Steering Gear
2	N803942-S100	Bolt

(Continued)

Item	Part Number	Description
3	5015	Frame Side Rail
4	389564-S190	Bolt
5	388273-S101	Washer
6	3590	Steering Gear Sector Shaft Arm
7	380771	Nut
A	—	Tighten to 41-57 N·m (30-42 Lb-Ft)
B	—	Tighten to 73-90 N·m (54-66 Lb-Ft)
C	—	Tighten to 230-310 N·m (170-228 Lb-Ft)

The following areas of the frame should be checked before performing a steering gear frame liner repair:

- the frame rail near the top and bottom flanges of steering gear
- the frame rail at the steering gear bolt heads

If there are cracks in these areas of the frame, the frame must be replaced. Inspect the mounting surface of the steering gear for signs of motion, loose rivets or cracks. Removal of the steering gear might be necessary to check for cracks in the frame liner. Refer to Section 11-02B for procedure. If the frame liner is cracked or has loose rivets, repair the liner by using Frame Repair Kit E6TZ-5K130-A. If necessary, a steering gear line-to-frame rivet repair can be made by using the following procedures.

Rivet Removal and Replacement

1. Drill a 3-mm (1/8-inch) hole through rivet.
2. Redrill the hole through the shank of the rivet with a 9-mm (11/32-inch) drill.
3. Use an air chisel to remove rivet head.
4. Drive out rivet with a punch or other suitable tool.

SERVICE PROCEDURES (Continued)

Rivet Removal

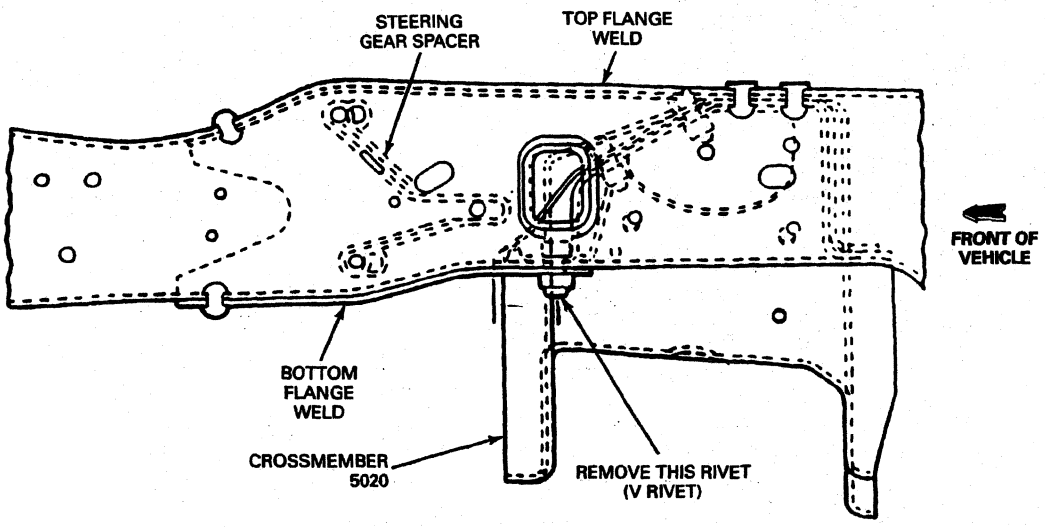

5. Line drill one 11-mm (7 / 16-inch) hole marked V to 14 mm (9 / 16-inch) diameter.

Rivet Replacement

6. Install one 14-mm (9 / 16-inch) bolt in the direction shown in the following illustration.

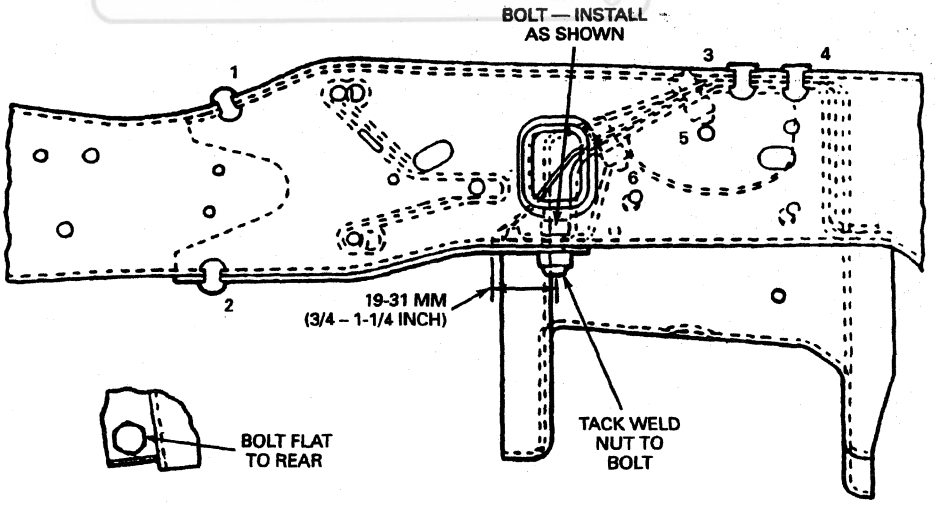

7. Tack weld the nut to the bolt as shown in the above illustration.
8. Position bolt head on top (next to front crossmember (5019)) with hex-head flat to the rear to provide best clamping.
9. Install one 14-mm (9 / 16-inch) washer nut side only and one 14-mm (9 / 16-inch) nut. Tighten to 188-192 N·m (139-141 lb-ft).

Official Licensed Product Ford Motor Company

SERVICE PROCEDURES (Continued)

Rivet Replacement with Bolts

If a flange head nut and bolt are not available, Grade 5 hex-heads may be substituted with one flatwasher required under the nut and one flatwasher required under the bolt head. Grade 8 bolts may be substituted for any application. Refer to the Bolt Selection Chart below.

BOLT SELECTION CHART

Rivet Diameter	Bolt Size	Bolt Part Number	Washer Part Number	Nut Part Number	Torque Specs.
3/8-Inch and 10-mm	7/16-14x1.25	56561-S2 (Class S)	Not Req.	382400-S2 (Class RG)	33-50 Lb-Ft (45-68 N·m)
3/8-Inch and 10-mm	7/16-14x1.75	56563-S2 (Class C)	Not Req.	382400-S2 (Class RG)	33-50 Lb-Ft (45-68 N·m)
7/16-Inch	1/2-13x1.5 (Grade 5)	56783-S100 (Class C)	Not Req.	33773-S2 (Class S)	53-75 Lb-Ft (72-102 N·m)
7/16-Inch	1/2-13x2.0 (Grade 8)	383896-S2 (Class BS)	44879-S2 (Class BS)	33773-S2 (Class S)	75-105 Lb-Ft (102-142 N·m)

SPECIFICATIONS

TORQUE SPECIFICATIONS

Description	N·m	Lb-Ft
Bolt, Shock Bracket	118-122	88-89
Nut, Crossmember No. 1	188-192	139-141
Nut, Crossmembers No. 2, 3, 4, 6, and 7 (Where Required)	60-80	44-59
Steering Shaft to Steering Gear	41-57	30-42
Bolt Steering Gear to Frame Rail	73-90	54-66
Nut Sector Shaft Arm to Steering Gear	230-310	170-228

SPECIAL SERVICE TOOLS/EQUIPMENT

ROTUNDA EQUIPMENT

Model	Description
190-01025	Laser Measuring System

Ford Motor Company Official Licensed Product

SECTION 02-02 Body Mounting

SUBJECT	PAGE	SUBJECT	PAGE
VEHICLE APPLICATION	02-02-1	DISASSEMBLY AND ASSEMBLY	
REMOVAL AND INSTALLATION		Body Insulators	02-02-3
Body Insulators	02-02-1	SPECIFICATIONS	02-02-3

VEHICLE APPLICATION

F-250 Heavy Duty, F-350 and F-Super Duty Chassis Cab

REMOVAL AND INSTALLATION

Body Insulators

NOTE: No lubricants of any kind are to be used during body insulator installation.

Refer to the following illustrations for removal and installation.

Official Licensed Product
Ford Motor Company

REMOVAL AND INSTALLATION (Continued)

Body Insulators, F-250 Heavy Duty, F-350 and F-Super Duty Chassis Cab

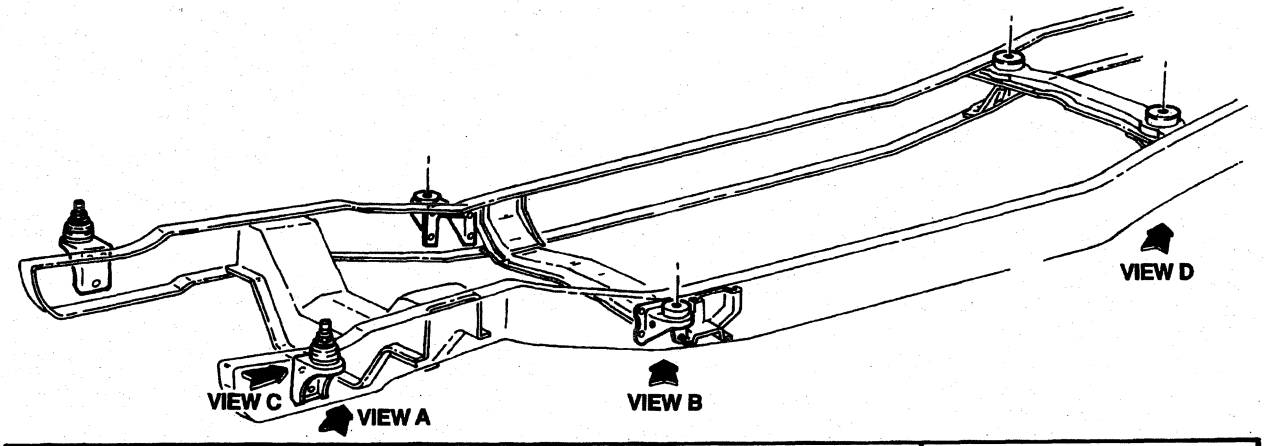

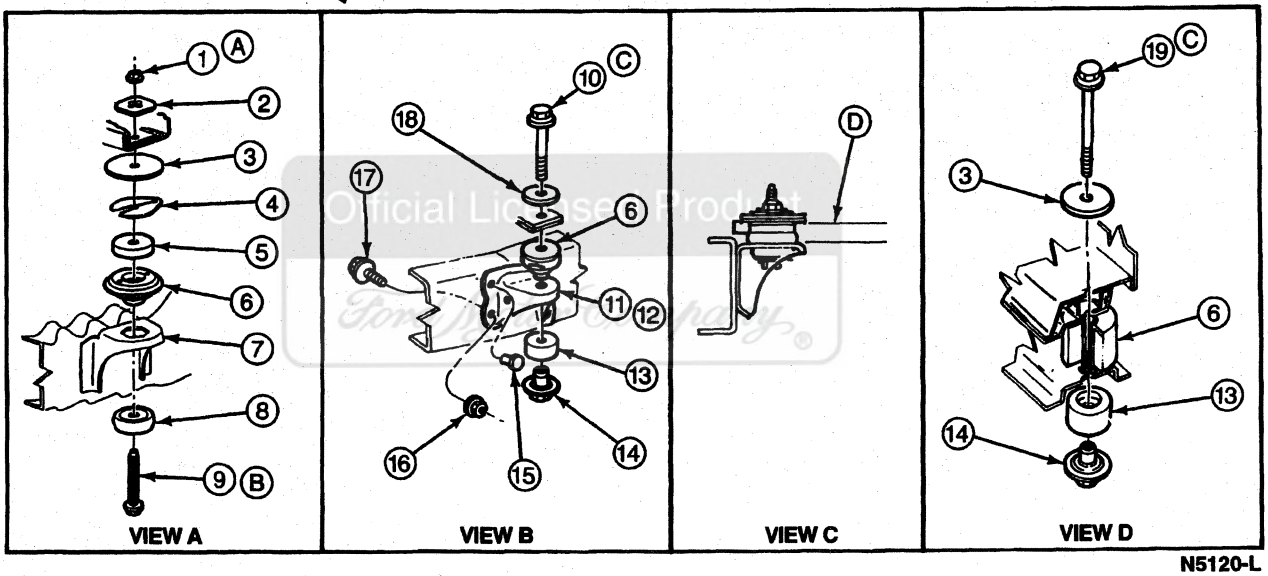

N5120-L

Item	Part Number	Description
1	N621946-S2	Nut and Washer
2	N800788-S2	Spacer
3	N801201-S1	Washer
4	1000145	Shim-Split
5	387676-S	Washer
6	1000192	Insulator (Upper)
7	5A041	Bracket
8	2500155	Insulator (Lower)
9	N800442-S2	Bolt
10	389838-S100	Bolt
11	5077	Bracket (RH)
12	5078	Bracket (LH)

(Continued)

Item	Part Number	Description
13	1000155	Insulator (Lower)
14	389672-S2	Tubular Nut
15	N647096-S	Rivet
16	N620482-S2	Nut
17	N605801-S2	Bolt
18	385127	Washer
19	387165-S100	Bolt
A	—	Tighten to 46-68 N·m (34-50 Lb-Ft)
B	—	Tighten to 61-101 N·m (45-74 Lb-Ft)
C	—	Tighten to 68-92 N·m (50-68 Lb-Ft)
D	—	32.2 mm (1.27 inch)

REMOVAL AND INSTALLATION (Continued)

Body Insulators, F-250 Heavy Duty and F-350, Styleside Box to Frame

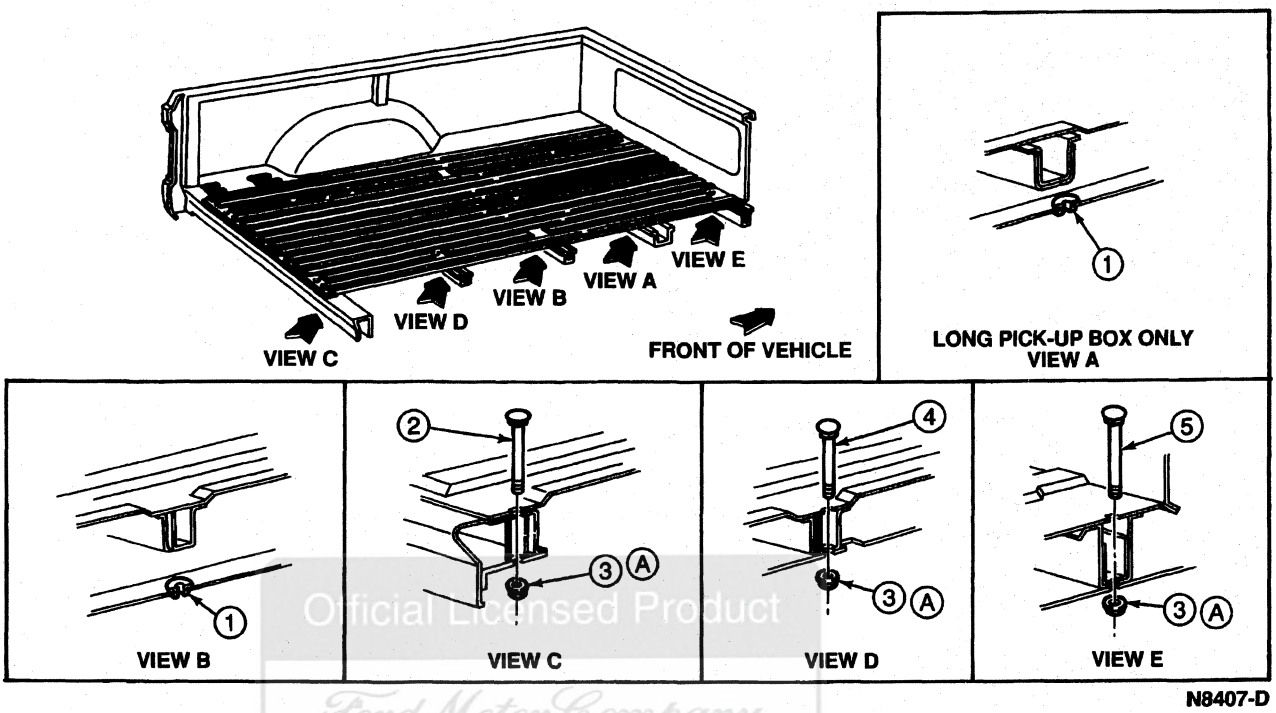

Item	Part Number	Description
1	5C036	Isolator
2	N803022-S40	Bolt
3	N620483-S2	Nut

(Continued)

Item	Part Number	Description
4	N803020-S40	Bolt
5	N803023-S40	Bolt
A	—	Tighten to 54-95 N·m (40-70 Lb-Ft)

DISASSEMBLY AND ASSEMBLY

Body Insulators

Disassembly

1. Remove nut and washer from top of radiator support.
2. Back out bolt from under lower insulator.

Assembly

1. Place upper insulator on frame bracket.
2. Position lower bolt through lower insulator and thread into shaft of upper insulator. Tighten bolt to 61-101 N·m (45-74 lb-ft). Make sure upper absorber is properly seated into frame bracket.
3. Replace shims that were removed during disassembly.
4. Replace radiator support.
5. Replace washer on top of radiator support and nut. Tighten to 46-68 N·m (34-50 lb-ft).

SPECIFICATIONS

TORQUE SPECIFICATIONS

Description	N·m	Lb-Ft
Upper Insulator Bolt	68-92	50-68
Lower Insulator Bolt	61-101	45-74
Upper Insulator Nut and Washer	46-68	34-50
Pickup Box Frame Isolator Nut	54-95	40-70
Radiator Support Nut and Washer	46-68	34-50

Official Licensed Product
Ford Motor Company

GROUP

SUSPENSION 04

SECTION TITLE	PAGE
SUSPENSION, FRONT, 4-WHEEL DRIVE	04-01B-1
SUSPENSION, FRONT, 4X2	04-01A-1
SUSPENSION, REAR	04-02-1
SUSPENSION, SERVICE	04-00-1
WHEELS AND TIRES	04-04-1

SECTION 04-00 Suspension, Service

SUBJECT	PAGE
VEHICLE APPLICATION	04-00-1
DESCRIPTION AND OPERATION	
Camber	04-00-2
Caster	04-00-2
Dogtracking	04-00-3
Toe	04-00-2
Wheel Alignment, Front	04-00-1
DIAGNOSIS AND TESTING	
Suspension	04-00-3
Component Test	04-00-15
Ball Joints, Front Suspension Upper and Lower Arm, Twin I-Beam Front Axle Equipped with Joints	04-00-15
Inspection and Verification	04-00-3
Ball Joint, Lower, Inspection	04-00-5
Ball Joint, Upper, Inspection	04-00-5
Road Test	04-00-4
Shock Absorber Checks	04-00-5
Suspension, Rear	04-00-6
Tire Wear	04-00-3
Vibration and Roughness	04-00-4
Pinpoint Tests	04-00-11
DIAGNOSIS AND TESTING (Cont'd.)	
Symptom Chart	04-00-7
ADJUSTMENTS	
Steering Stop	04-00-20
Vehicle Lean Correction	04-00-19
Front Lean	04-00-19
Rear Lean	04-00-20
Wheel Alignment, Front	04-00-15
Caster and Camber, F-250 Heavy Duty and F-350 4x2 Ball Joint System	04-00-16
Caster and Camber, F-250 Heavy Duty and F-350 4x4 Vehicles	04-00-17
Caster and Camber, F-Super Duty Monobeam Non-Driving Axle	04-00-18
Caster, F-250 Heavy Duty and F-350	04-00-18
Toe	04-00-18
Wheel Bearings, Front	04-00-15
SPECIFICATIONS	
Front Wheel Alignment Specifications	04-00-20
Front Wheel Turn Angle Specifications	04-00-20
SPECIAL SERVICE TOOLS/EQUIPMENT	04-00-21

VEHICLE APPLICATION

F-Series

DESCRIPTION AND OPERATION

Wheel Alignment, Front

Wheel alignment measurements describe the angular orientation of the wheel / tire assembly and the steering axis.

Caster, camber and toe are the three major, measurable alignment parameters.

- Camber and toe affect tire wear and directional stability.
- Caster affects directional stability without causing tire wear.

DESCRIPTION AND OPERATION (Continued)

- The values of caster, camber and toe change when a vehicle is loaded and driven. Therefore, the specifications shown in this section reflect the static measurement of alignment required so the vehicle will have an alignment when driven that is most favorable for tire wear and directional stability.

Caster

Caster is used to describe the vertical fore-aft tilt of the steering axis. This axis is defined by a line drawn through the centers of the spindle ball joints and is measured relative to the ground. Because of this; raising (or lowering) the rear without changing front ride height will subsequently decrease (or increase) the caster angle by the same amount the frame angle changes.

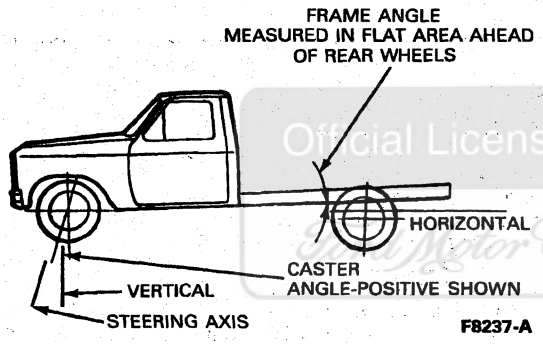

F8237-A

Camber

Camber is used to describe the vertical tilt of the wheel as viewed from the front.

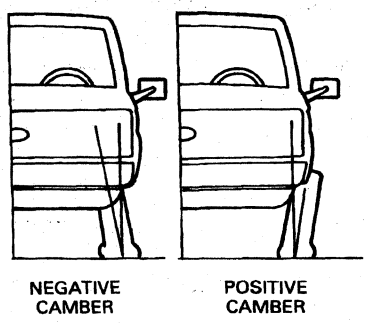

F8238-A

- Steering axis inclination (included angle) is the line to the axle drawn through the spindle ball joint when viewed from the front.
- Included angle is a function of the spindle itself and does not change with changes in ride height or frame angles.
- Scrub radius is the offset of the center of the tire tread at the ground to the point where the steering axis contacts the ground.

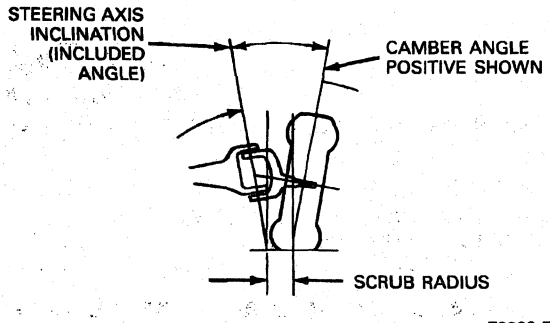

F8239-B

Toe

Toe-in and toe-out refer to the difference in the distance between the extreme front and extreme rear of the tires.

- Toe-in (positive toe) occurs when the dimension taken at the front of the tires is less than that taken at the rear of the tires.
- Toe-out (negative toe) occurs when the dimension taken at the front of the tires is greater than that taken at the rear of the tires.
- If aftermarket equipment that significantly affects the ride height (such as snowplow, second unit bodies or tool boxes) is added, the toe might need to be adjusted. Toe should be maintained at the specified setting with the vehicle in the loaded condition experienced for more than 50 percent of use.
- Toe should only be checked and adjusted after the caster and camber have been adjusted to specification. Refer to Front Wheel Alignment Specifications in this section.

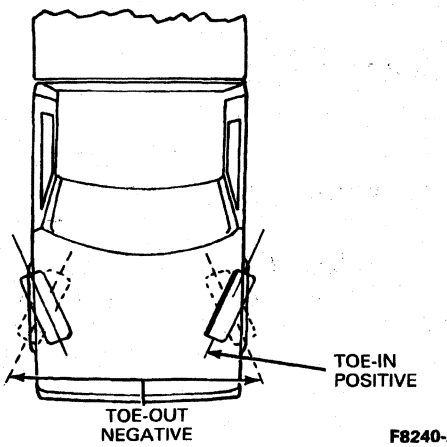

F8240-A

Official Licensed Product

DESCRIPTION AND OPERATION (Continued)

Dogtracking

All F-250 Heavy Duty and F-350 4x2 and 4x4 vehicles with single rear wheels (SRW) have a front tread that is wider than the rear tread. Front tread is the distance between the two front tires; rear tread is the distance between the rear tires. The illustration shows these differences.

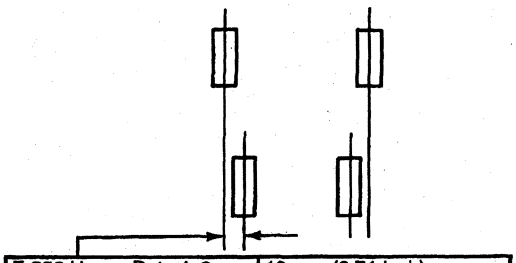

F-250 Heavy Duty 4x2 F-350 4x2	18 mm (0.71 inch)
F-250 Heavy Duty 4x4	32 mm (1.25 inch)
F-350 4x4	46 mm (1.81 inch)

DF0008-A

When a vehicle with these tread differences is driven on a crowned road, the front tends to ride higher up the crown than the rear, making the vehicle appear to dogtrack, as illustrated.

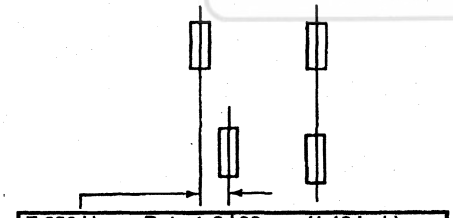

F-250 Heavy Duty 4x2 F-350 4x2	36 mm (1.42 inch)
F-250 Heavy Duty 4x4	64 mm (2.52 inch)
F-350 4x4	92 mm (3.62 inch)

DF0009-A

Official Licensed Product
Ford Motor Company

DIAGNOSIS AND TESTING

Suspension

Inspection and Verification

Tire Wear

1. Inspect tires for wear. The original equipment tires have built-in tread wear indicators to show when tires need replacement. Abnormal or excessive wear can be caused by incorrect wheel alignment, wheel / tire imbalance or improper tire pressure. Refer to Section 04-04.
2. NOTE: Tires that show irregularities and definite roughness must be replaced.

   Inspect to determine if the following conditions apply.

VISUAL INSPECTION CHART

Mechanical
• Incorrect mounting • Misalignment • Loose wheel bearings • Bent wheels • Cupping or scalloping of tires from imbalance • Possible loose or worn steering connecting rod, drag link and pitman arm • Underinflation or mechanical irregularities such as out-of-balance condition of wheel or tire and bent or damaged wheel • Loose, damaged or worn front suspension parts

DIAGNOSIS AND TESTING (Continued)

Tire Wear

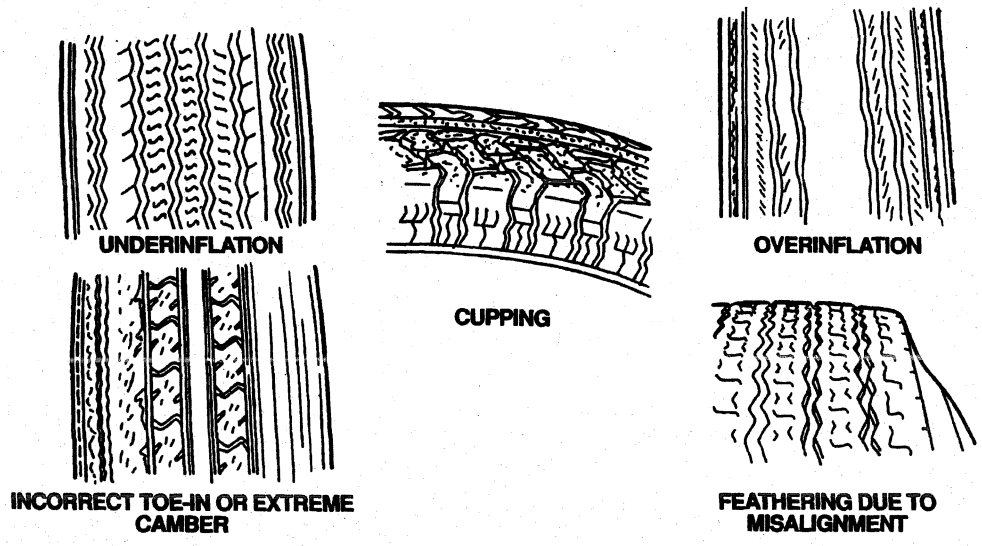

Official Licensed Product

Vibration and Roughness

Vibration, roughness, tramp, shimmy and thump can be caused by excessive tire or wheel runout, worn or cupped tires, or wheel and tire imbalance.

These conditions can also be caused by rough or undulating road surfaces. Driving the vehicle on different types of road surfaces will indicate if the road surfaces are actually causing the condition.

Do not immediately suspect the tires when attempting to diagnose a vibration concern. Other sources of vibration include:

- loose or worn wheel bearings
- loose or worn suspension or steering components
- brake hub and rotor or drum runout
- loose engine or transmission supports
- engine-driven accessories

This section covers those vibrations related to the tires and wheels.

For diagnostic procedures and service for non-tire related vibrations, refer to Section 00-04.

Road Test

A tire vibration diagnostic procedure always begins with a road test. The road test and customer interview (if available) will provide much of the information needed to find the source of a vibration.

During the road test, drive the vehicle on a road that is smooth and free of undulations. If vibration is apparent, note and record the following:

- the speed at which the vibration occurs
- what type of vibration occurs in each speed range — mechanical (such as shake) or audible (such as tire whine)
- how the vibration is affected by changes in vehicle speed, engine speed and engine torque
- type of vibration sensitivity — torque sensitive, vehicle speed sensitive or engine speed sensitive

If the road test indicates the vibration is related to the tires or wheels, refer to Pinpoint Test G in this section. Refer to Section 04-04 to help pinpoint the cause of the concern. If the road test indicates there is tire whine, but no shake or vibration, the noise originates with the contact between the tire and the road surface.

- A thumping noise usually means the tire has flat or soft spots making a noise as they slap the roadway. Tire whine can be distinguished from axle noise, axle noise diminishes or changes according to load or speed while tire noise remains the same over a range of speeds.
- To verify that tire noise is not associated with shake or vibration, inflate the tires one at a time and check for a change in the sound. The pitch or whine will change as the increased pressure changes the tire frequency.
- Be sure to deflate tires to their proper pressures after this check is completed.

A complete road test procedure is provided in Section 00-04.

DIAGNOSIS AND TESTING (Continued)

Use the following explanation of terms to help isolate the source of the vibration.

Torque Sensitive

The condition can be improved or worsened by accelerating, decelerating, coasting, maintaining a steady vehicle speed and application of engine torque.

Vehicle Speed Sensitive

The vibration always occurs at the same vehicle speed and is not affected by engine torque, engine speed or transmission gear selection.

Engine Speed Sensitive

The vibration occurs at varying vehicle speeds when a different gear is selected. It can sometimes be isolated by increasing or decreasing engine speed with the transmission (7003) in NEUTRAL, or by stall testing with the transmission in gear. If the condition is engine-speed sensitive, the condition is not related to tires.

Front End

1. **CAUTION: Do not attempt to adjust front wheel alignment without making a preliminary inspection of the front end parts, and correcting where necessary.**

   Fill all fluids to specification.
2. Make sure spare tire or wheel and related equipment are stored properly.
3. Remove any excessive accumulation of mud, dirt or road deposits from the chassis and underbody.
4. Retain all normal loads in the vehicle. Inflate all tires to the pressure specified on the Certification Label (usually located on the inside driver door pillar).
5. Check both front tires for the same size, ply rating and load range. Refer to Section 04-04.
6. Check for excessive front wheel bearing end play. Refer to Wheel Bearings, Front, in the Adjustments portion of this section. Adjust or replace the front wheel bearings. Refer to Section 04-01A or Section 04-01B.
7. Check for worn or damaged spindle pins or ball joints. Replace the ball joints or spindle pins. Refer to Section 04-01A (4x2) and Section 05-03A or Section 05-03B of the Powertrain, Drivetrain Manual.
8. Check for bent steering linkage or excessively worn joints. Refer to Section 11-03.
9. Check the steering gear mounting bolts and tighten to the specified torque. Refer to Section 11-02B or Section 11-02D.
10. Inspect the radius arm if bent or damaged. Inspect the bushings at the radius arm-to-frame attachment for wear and looseness. Repair or replace parts as required. Refer to Section 04-01A or Section 04-01B.
11. Check other suspension components for damage.
12. Check for aftermarket changes to steering, suspension, wheel and tire components (such as competition, heavy-duty, etc.). Specifications in this manual do not apply to vehicles with aftermarket changes.

Ball Joint, Upper, Inspection

Refer to Ball Joints, Front Suspension Upper and Lower Arm, Twin I-Beam Front Axle Equipped with Joints, under Component Test in the Diagnosis and Testing portion of this section.

Refer to Section 04-01A for service to ball joint assembly on 4x2 vehicles. For 4x4 vehicles, refer to Section 05-03A or Section 05-03B in the Powertrain, Drivetrain Manual.

Ball Joint, Lower, Inspection

Refer to Ball Joints, Front Suspension Upper and Lower Arm, Twin I-Beam Front Axle Equipped with Joints, under Component Test in the Diagnosis and Testing portion of this section.

Refer to Section 04-01A for service to ball joint assembly on 4x2 vehicles. For 4x4 vehicles, refer to Section 05-03A or Section 05-03B in the Powertrain, Drivetrain Manual.

Shock Absorber Checks

CAUTION: The low pressure gas shock absorbers are charged with nitrogen gas to 1034 kPa (150 psi) for 1-3/8 inch bore. Do not attempt to open, puncture or apply heat to the shock absorbers.

All vehicles are equipped with low pressure gas-filled hydraulic shock absorbers of the direct acting type. They are non-adjustable and non-refillable. They cannot be serviced as cartridges and must be serviced as assemblies.

Vehicle Inspection

Before replacing a shock absorber, check the action of the shock absorbers as follows.

1. Check all tires for proper inflation pressure.
2. Check tire condition to confirm proper front end alignment, tire balance and overall tire condition such as separation or bulges.
3. Check the vehicle for optional suspension equipment such as heavy-duty handling or trailer tow suspensions. These suspensions will have a firmer ride feeling than standard suspensions.
4. Check the vehicle attitude for evidence of possible overload or sagging.

   Many times front springs and front shock absorbers (18124) are replaced in an effort to solve a vehicle sag concern. Shock absorbers are, by design, hydraulic damping units only, and unlike suspension springs, do not support any suspension loads. Therefore, replacing a shock absorber will not correct a vehicle sag concern.
5. Road test vehicle to confirm customer concern.
6. Make sure the shock absorber is securely and properly installed.

Official Licensed Product Ford Motor Company

DIAGNOSIS AND TESTING (Continued)

7. Check the shock absorber insulators for damage and wear.
8. Replace any worn or damaged insulators and tighten attachments to the specified torque (on a shock absorber that incorporates internal insulators, replace the shock absorbers).
9. Tighten upper shock absorber attachments to 34-47 N·m (25-35 lb-ft), and lower attachments to 60-81 N·m (45-60 lb-ft).
10. Inspect the shock absorber for evidence of fluid leakage.

    A light film of oil (weepage) on the upper portion of the front shock absorber is permissible and is a result of proper shock lubrication. Weepage is a condition in which a thin film of oil is deposited on the shock outer tube (body) and is noticeable due to the collection of dust in this area. Front shock absorbers that exhibit this weepage condition are functional units and should not be replaced. Leakage is a condition in which the entire shock body is covered with oil and the oil will drip from the shock onto the pavement.
11. If leakage exists:
    a. Make sure the fluid observed is not from sources other than the front shock absorber.
    b. Replace the worn or damaged front shock absorber.
12. Disconnect the lower end of the shock absorber.
13. Extend and compress the shock absorber as fast as possible, using as much travel as possible. Action should be smooth and uniform throughout each stroke.
    - Higher resistance on extension than on compression is a normal condition.
    - Faint swish noises are also normal.
    - Make sure the part number of the replacement is the same as that of the original shock absorber.

Hoist Check

- **Noise:** Noise can be caused by loose suspension or shock attachments. Verify that all attachments or the suspension components and front springs and front shock absorbers are tight. Replace any worn or damaged upper stud insulators. Check front springs and front shock absorbers for external damage.
- **Bottom/Hopping:** Check condition of the rubber suspension travel stops (front suspension bumpers (3020)). Replace if worn or missing. Examine for evidence of previous overload or damaged components.
- **Force-Check:** Support axle and remove lower front shock attachment. Stroke front shock body using as much travel as possible. The action should be smooth and uniform throughout each stroke. Damping forces should be equivalent on both sides of the vehicle.
- Replace only the worn or damaged front shock absorber.

In the past it was recommended that front shock absorbers be replaced in pairs if one unit became unserviceable. Improved sealing, new materials, design and improved rod machining and hardening techniques have added to the reliability of shock absorbers. Therefore, front shock absorbers no longer need to be replaced in pairs when only one unit is unserviceable.

Bench Test

The front shock absorbers are gas-pressurized, which results in their being fully extended when not restrained. If a front shock absorber does not extend fully, it is damaged and should be replaced. Check length overall (LOA). If the front shock absorber does not meet the length overall requirement, it is a good indication something internal is not to specification and the front shock absorber should be replaced.

With the front shock absorber in the normal upright position, compress it and allow it to extend three times to purge the pressure chamber of any gas that might have been introduced during handling.

Place the front shock absorber right side up in a vise. Hand-stroke the front shock absorber as fast as possible using as much travel as possible. Action should be smooth and uniform throughout each stroke. Higher resistance on extension than on compression is normal.

The following conditions are abnormal:

- a lag or skip at reversal of travel near mid-stroke when front shock absorber is properly primed and in the installed position
- seizing
- noise, other than a faint swish, such as a clicking upon fast stroke reversal
- excessive fluid leakage
- with rod fully extended, any lateral motion of rod in relation to outer cylinder

If front shock absorber action remains erratic after purging air, install a front shock absorber, replacing only the damaged front shock absorber. Front shock absorbers do not need to be replaced as sets.

Suspension, Rear

1. Check for leaks on shock absorbers (18080).
2. Check shock absorber operation for stiff, rough or spongy operation.
3. Check condition of rear suspension bushings and rear suspension springs.

If the above checks reveal evidence of excessive wear, deterioration or improper operation, replace damaged components.

DIAGNOSIS AND TESTING (Continued)

Vehicle Lean

Side-to-side vehicle lean should be verified by measuring the fender lip-to-ground dimension before beginning diagnosis and service actions. Normal acceptable limits are:

- maximum of 16 mm (5/8-inch) variance between left and right front wheel lips to ground
- maximum of 19 mm (3/4-inch) variance between left and right rear wheel lips to ground

NOTE: Codes identifying the front and rear spring options and springs are printed on the Certification Label. Replace springs in pairs if one is found to be damaged or worn. If a spring should require replacement because it is damaged, worn or due to a leaning condition, replace only with the same part specified on the label. In rare instances, the spring codes will not reflect the springs as installed due to a DSO option or assembly plant substitution. If a DSO option number is shown on the certification label, the district office can establish whether springs are affected. If the factory-installed springs do not agree with the code printed on the Certification Label (right and left spring part number should match), replace the damaged or worn spring with a new spring of the same part number as the damaged or worn spring. It will not be necessary to replace the matching, non-worn or undamaged spring.

4. Place the vehicle on a flat, smooth surface.
5. Inspect vehicle for any heavy add-ons that may cause excessive weight on any corner of the vehicle.
   - In cases where the excess weight is a snow plow, a rear tailgate lift, etc., the vehicle must be diagnosed with the equipment in place.
   - Measure corner weights if necessary.
   - Vehicle should be empty, fuel tanks full, no cargo such as tools, equipment or debris in the pickup box.
   - Vehicle must be sitting on the wheels and tires and not a hoist, jack or jack stands.
6. Check all wheels (1007) and tires:
   - Wheels must be same size and design, right and left side on each axle.
   - Wheel size and design, and tire size and design should be as indicated on the Certification Label.
   - Check air pressure of all tires; inflate to specifications indicated on the Certification Label.
7. Check front and rear suspension. Make sure the same spring is on the left/right front and left/right rear. The front springs have I.D. tags indicating the part number. The rear springs (5560) have the part number stamped on the bottom just behind the U-bolt attachment.
8. Jounce the vehicle's front and rear suspension to normalize the vehicle static ride height.
9. Measure the height of the right and left fender lip openings for both front (dimension A) and rear (dimension B).

SIDE-TO-SIDE LEAN

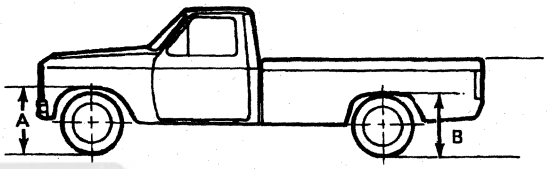

F6657-B

10. Calculate the side-to-side differences for each dimension. If these differences are greater than 16 mm (5/8 inch) between left or right front or 19 mm (3/4 inch) between left and right rear, adjustment can be performed following the Vehicle Lean Correction procedure under Adjustments in this section.

Symptom Chart

Refer to the following chart for front suspension problems. For driveline noise, refer to Section 00-04.

DIAGNOSIS AND TESTING (Continued)

SUSPENSION

Condition	Possible Source	Action
• Vehicle Leans to One Side	• Incorrect tire pressure.	• MAKE SURE all tires are filled to specified pressure.
	• Improper tire / wheel usage.	• INSTALL correct tire / wheel combination.
	• Vehicle overloaded or unevenly loaded.	• CORRECT as required.
	• Loose, worn or damaged front or rear suspension components.	• Visually INSPECT suspension systems. SERVICE or REPLACE as required. REFER to Section 04-01A, Section 04-01B or Section 04-02.
	• Improper spring usage or improperly installed and seated springs.	• CORRECT as required. REFER to appropriate section in Group 04.
	• Incorrect front axle ride height. • Lateral tilt out of specification.	• To adjust, REFER to Vehicle Lean Correction in the Adjustments portion of this section.
	• Incorrect rear axle ride height. • Lateral tilt out of specification.	• To adjust, REFER to Vehicle Lean Correction in the Adjustments portion of this section.
• Front Bottoming or Riding Low	• Incorrect tire pressure.	• CORRECT as required.
	• Improper tire / wheel usage.	• INSTALL correct tire / wheel combination.
	• Vehicle overloaded or unevenly loaded.	• CORRECT as required.
	• Broken or incorrectly installed front springs.	• SERVICE or REPLACE as necessary. REFER to Section 04-01A or Section 04-01B.
	• Loose or broken shackles.	• TIGHTEN or REPLACE as necessary.
	• Distorted or split front suspension bumper.	• CORRECT as required.
	• Incorrect front springs.	• REPLACE front springs.
• Dogtracking of Rear Wheels	• Loose or damaged front or rear suspension components.	• INSPECT, SERVICE or REPLACE as required. REFER to Section 04-01A, Section 04-01B or Section 04-02.
	• Loose rear spring U-bolts.	• TIGHTEN to specification. REFER to Section 04-02.
	• Rear spring improperly installed on axle.	• SERVICE as required.
	• Rear spring center bolt bent.	• REPLACE center bolt.
	• Improperly installed front leaf springs (4x4).	• SERVICE as necessary.
	• Rear axle out of specification or damaged.	• SERVICE as necessary.

Official Licensed Product Ford Motor Company

DIAGNOSIS AND TESTING (Continued)

SUSPENSION (Continued)

Condition	Possible Source	Action
• Shimmy or Wheel Tramp	• Loose front axle bearing bracket attaching parts.	• TIGHTEN to specification. REFER to Section 04-01A for 4x2 or Section 05-03A or Section 05-03B of the Powertrain, Drivetrain Manual for 4x4.
	• Incorrect tire pressure.	• ADJUST air pressure in tires.
	• Excessive tire sidewall deflection.	• INSPECT, ADJUST air pressure and REPLACE as necessary.
	• Irregular tire wear or tire sizes not uniform.	• CHECK front wheel alignment, ADJUST and REPLACE with same size tires.
	• Loose lug nuts.	• TIGHTEN to specifications.
	• Front wheel bearing adjustment.	• ADJUST to specifications.
	• Out-of-round wheels.	• REPLACE as required.
	• Out-of-round tires.	• REPLACE as required.
	• Wheel and tire lateral runout not to specifications.	• FOLLOW tire and wheel runout check. REFER to Section 04-04.
	• Incorrect wheel and tire balance.	• BALANCE wheels and tires.
	• Front wheel alignment (toe-in and caster) out of specification.	• SET toe to specifications. SET caster to specifications on vehicles with front leaf-type springs.
	• Deteriorated radius arm bushing.	• REPLACE. REFER to Section 04-01A or Section 04-01B.
	• Loose, worn or damaged shock absorbers.	• TIGHTEN and REPLACE as necessary. REFER to Section 04-01A or Section 04-01B.
	• Loose, worn or damaged steering linkage and idler arm connections.	• TIGHTEN or REPLACE as necessary. REFER to Section 11-03.
	• Broken or sagging springs.	• REPLACE as required. REFER to Section 04-01A, Section 04-01B or Section 04-02.
	• Loose steering gear mounting.	• TIGHTEN to specifications. REFER to the appropriate steering gear section in Group 11.
	• Incorrect steering gear adjustment.	• ADJUST to specifications.
	• Worn ball joints.	• REPLACE ball joints.
	• Worn spindle pins.	• REPLACE spindle pins and spindle pin bushings.
• Sway or Roll	• Unequal load distribution (side to side).	• CORRECT as necessary.
	• Excessive load or body height.	• CORRECT as necessary.
	• Incorrect tire pressure.	• ADJUST air pressure in tires.
	• Loose lug nuts.	• TIGHTEN to specifications.
	• Worn or loose stabilizer assembly.	• TIGHTEN or REPLACE as required. REFER to Section 04-01A, Section 04-01B or Section 04-02.
	• Broken or sagging spring.	• REPLACE as required.
	• Incorrect steering gear adjustment.	• ADJUST to specifications. REFER to Section 11-02B or Section 11-02D.
	• Loose steering gear mounting.	• TIGHTEN to specifications.
	• Excessive front or rear overhang.	• CORRECT as necessary.
	• Broken toe bolts on rear spring.	• REPLACE as required.
• Sticky Steering, Pointing or Small Angle Returnability	• High spindle rotating torque.	• INSPECT for sticky steering linkage joints and/or spindle ball joints/spindle pins and REPLACE as required.
	• Excessive steering gear preload/meshload.	• MEASURE preload/meshload, ADJUST as required.
	• Power steering control valve centering.	• INSPECT and SERVICE as required.
	• High steering column friction or binding.	• INSPECT for interfering parts, worn steering column bearings and SERVICE or REPLACE as required.

Official Licensed Product
Ford Motor Company

DIAGNOSIS AND TESTING (Continued)

SUSPENSION (Continued)

Condition	Possible Source	Action
• Wander	• Improper loading.	• WEIGH vehicle, BALANCE loading and / or REMOVE payload as required.
	• Low tire pressure.	• INFLATE to specification.
	• Improper tire / wheel size.	• REPLACE as necessary.
	• Steering linkage ball joint looseness or wear.	• INSPECT and SERVICE as required.
	• Spindle ball joint / spindle pin looseness or wear.	• INSPECT and REPLACE as required.
	• Wheel bearing looseness or wear.	• INSPECT and SERVICE as required.
	• Worn suspension bushings.	• INSPECT and REPLACE as required.
	• Loose suspension attachments of components.	• INSPECT all attachments of components and SECURE / TIGHTEN with proper torque or REPLACE as required.
	• Weak shock absorber control.	• SERVICE shocks as required.
	• Improper steering gear meshload.	• MEASURE meshload and ADJUST as required.
	• Steering gear peak meshload not on center.	• If clear vision is correct, INSPECT steering gear and ADJUST or REPLACE as required. If clear vision is not correct, CHECK alignment, CENTER steering wheel and RESET front toe to optimum setting as required.
	• Excessive front total toe-out.	• CHECK alignment and RESET front toe to optimum setting as required.
• Steady State, Constant Drift / Pull	• Improper loading causing improper caster and / or caster split.	• WEIGH vehicle, BALANCE load or REMOVE load as required. If condition still exists, CHECK alignment and RESET caster and / or camber to optimum setting as required.
	• Improper tire pressures.	• INFLATE tires to specifications.
	• Mismatched tires / wheels.	• REPLACE as required.
	• Unequal tire circumferences.	• MEASURE, CORRECT through tire rotation or REPLACE as required.
	• Uneven tire wear.	• CHECK alignment and ADJUST to optimum settings as required, ROTATE or REPLACE tires as required.
	• Tire conicity (new or worn tires).	• ROTATE right front tire to left front position, ROTATE left front to right front. If direction of drift / pull has changed, ROTATE tires or REPLACE as required.
	• Steering linkage ball stud wind up.	• LOOSEN all steering linkage ball studs from tapered holes in linkage. ALIGN wheels / steering wheel straight ahead. SEAT tapered hole and TIGHTEN ball stud to proper torque.
	• Brake drag.	• RAISE vehicle and SPIN wheels, CHECK for unequal side-to-side spinning drag. SERVICE brakes as required.
	• Power steering control valve centering.	• CHECK steering gear centering and SERVICE as required.
	• Low steering gear preload / meshload.	• MEASURE steering gear preload / meshload and ADJUST as required.
	• Excessive caster split.	• CHECK alignment, SET to optimum settings as required.
	• Excessive camber split.	• CHECK alignment, SET to optimum settings as required.

Official Licensed Product
Ford Motor Company

DIAGNOSIS AND TESTING (Continued)

SUSPENSION (Continued)

Condition	Possible Source	Action
• Drift Left or Right	• Tires. • Steering linkage. • Alignment.	• REFER to Pinpoint Test A.
• Steering Wheel Off-Center	• Clear vision. • Steering linkage.	• REFER to Pinpoint Test B.
• Tracks Improperly	• Caster. • Rear suspension.	• REFER to Pinpoint Test C.
• Rough Ride	• Front shock absorbers. • Rear shock absorbers.	• REFER to Pinpoint Test D.
• Excessive Noise	• Shock absorbers. • Springs. • Suspension components.	• REFER to Pinpoint Test E.
• Improper Tire Wear	• Tires (alignment). • Tires (balance).	• REFER to Pinpoint Test F.
• Vibration	• Tires and wheels. • Wheel bearings. • Wheel hubs. • Rotors. • Drums.	• REFER to Pinpoint Test G.

Pinpoint Tests

Official Licensed Product Ford Motor Company

PINPOINT TEST A: DRIFT LEFT OR RIGHT

Test Step		Result ▶	Action to Take
A1	CHECK TIRES		
	• Inspect tires for excessive wear or damage. • **Are tires excessively worn or damaged?**	Yes ▶ No ▶	REPLACE tires. GO to **A2**.
A2	CHECK STEERING LINKAGE		
	• Raise vehicle on hoist. • Check steering linkage for indications of excessive wear or damage. • **Is there indication of excessive wear or damage?**	Yes ▶ No ▶	SERVICE or REPLACE worn or damaged components as necessary. GO to **A3**.
A3	CHECK VEHICLE ALIGNMENT		
	• Place vehicle on an alignment rack. • Check vehicle alignment. • **Is alignment within specification?**	Yes ▶ No ▶	GO to **A4**. ADJUST alignment as necessary.
A4	BRAKE DRAG DIAGNOSIS		
	• **Does drift or pull occur when brakes are applied?**	Yes ▶ No ▶	REFER to Section 06-00 for diagnosis of brakes. GO to **B1**.

PINPOINT TEST B: STEERING WHEEL OFF-CENTER

Test Step		Result ▶	Action to Take
B1	CHECK CLEAR VISION		
	• Place vehicle on alignment rack. • **Is clear vision within specifications?**	Yes ▶ No ▶	GO to **B2**. ADJUST clear vision to specification.
B2	INSPECT STEERING COMPONENTS		
	• Raise vehicle on hoist. • Inspect steering components for excessive wear or damage. • **Are steering components excessively worn or damaged?**	Yes ▶ No ▶	REPLACE or SERVICE worn components. REFER to Section 11-00, Section 04-01A or Section 04-01B. GO to **C1**.

DIAGNOSIS AND TESTING (Continued)

PINPOINT TEST C: TRACKS IMPROPERLY

Test Step		Result ▶	Action to Take
C1	CHECK CASTER		
	• Place vehicle on alignment rack. • **Are caster and caster split (LH minus caster) within specification?**	Yes ▶ No ▶	GO to **C2**. ALIGN vehicle.
C2	CHECK REAR SUSPENSION		
	• Measure vehicle wheel base for LH and RH. • Compare measurements. • **Are measurements the same?**	Yes ▶ No ▶	GO to **D1**. INSPECT rear suspension components for wear or damage. SERVICE or REPLACE worn or damaged components as required. REFER to Section 04-02.

PINPOINT TEST D: ROUGH RIDE

Test Step		Result ▶	Action to Take
D1	CHECK FRONT SHOCK ABSORBERS		
	• Raise vehicle on hoist. • Inspect front shock absorbers for oil leaks or damage. • **Are front shock absorbers leaking?**	Yes ▶ No ▶	REPLACE front shock absorbers. REFER to Section 04-01A or Section 04-01B. GO to **D2**.
D2	CHECK REAR SHOCK ABSORBERS		
	• With vehicle on hoist, inspect rear shock absorbers for oil leak or damage. • **Are shock absorbers leaking?**	Yes ▶ No ▶	REPLACE shock absorber. REFER to Section 04-02. Vehicle OK.

Official Licensed Product
Ford Motor Company

PINPOINT TEST E: EXCESSIVE NOISE

Test Step		Result ▶	Action to Take
E1	INSPECT SHOCK ABSORBER BOLTS		
	• Raise vehicle on hoist. • Inspect shock absorber mounting bolts. • **Are mounting bolts loose or broken?**	Yes ▶ No ▶	TIGHTEN / REPLACE shock absorber mounting bolts. REFER to Section 04-01A, Section 04-01B or Section 04-02. GO to **E2**.
E2	INSPECT SPRINGS		
	• With vehicle on hoist, inspect springs for damage. • **Are springs damaged?**	Yes ▶ No ▶	REPLACE springs. REFER to Section 04-01A, Section 04-01B or Section 04-02. GO to **E3**.
E3	INSPECT FRONT SUSPENSION		
	• Inspect front suspension components for excessive wear or damage. • **Are front suspension components worn or damaged?**	Yes ▶ No ▶	REPLACE front suspension components. REFER to Section 04-01A or Section 04-01B. Vehicle OK.

PINPOINT TEST F: IMPROPER TIRE WEAR

Test Step		Result ▶	Action to Take
F1	INSPECT TIRES		
	• Raise vehicle on hoist. • Inspect tires for uneven wear on inner or outer shoulder. • **Is there uneven tire wear?**	Yes ▶ No ▶	ALIGN vehicle. REPLACE tires if badly worn. GO to **F2**.
F2	UNEVEN TIRE WEAR		
	• With vehicle on hoist, inspect tires for sawtooth pattern. • **Do tires have sawtooth pattern?**	Yes ▶ No ▶	ALIGN vehicle. REPLACE tires if badly worn. GO to **F3**.

DIAGNOSIS AND TESTING (Continued)

PINPOINT TEST F: IMPROPER TIRE WEAR (Continued)

Test Step		Result ▶	Action to Take
F3	CHECK FOR CUPPED TIRE		
	• With vehicle on hoist, inspect tires for cupping or dishing. • **Are tires cupped or dished?**	Yes ▶ No ▶	BALANCE and ROTATE tires. REFER to Section 04-04. Vehicle OK.

PINPOINT TEST G: VIBRATION

Test Step		Result ▶	Action to Take
G1	ROAD TEST		
	• Accelerate vehicle to the speed at which the customer indicated the vibration occurred. • **Is a vibration present?**	Yes ▶ No ▶	GO to **G2**. Vehicle OK.
G2	INSPECT WHEEL BEARINGS		
	• Spin front tires by hand to check for wheel bearing roughness. Check bearing end play. • **Is end play OK?** 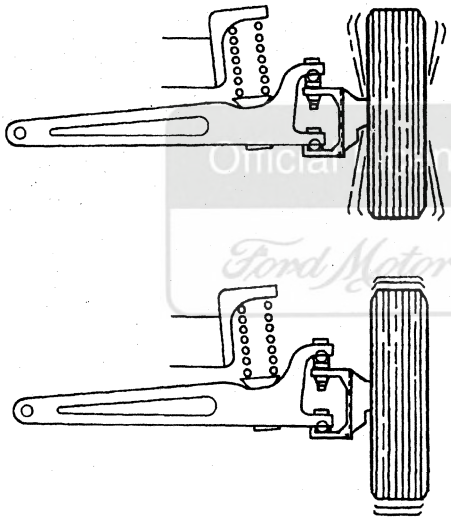 F9355-A	Yes ▶ No ▶	GO to **G3**. ADJUST or REPLACE and LUBRICATE bearings as necessary. PERFORM road test.
G3	TIRE RUNOUT ON VEHICLE		
	• Measure wheel/tire assembly runouts on vehicle using Rotunda Radial Run-Out Gauge 007-0056A or equivalent. Refer to Section 04-04. • **Is measurement within specification?**	Yes ▶ No ▶	GO to **G8**. GO to **G4**.
G4	TIRE RUNOUT OFF VEHICLE		
	• Measure tire assembly from any position that exceeds 1.59 mm (0.062 inch) radial or lateral. Before removing wheel/tire assembly, mark wheel stud and corresponding bolt hole so assembly can be installed in same position. Remove assembly and mount on wheel balancer. Measure runout as in Step G3. Assembly runout should be less than 1.59 mm (0.062 inch) radial and lateral. • **Is measurement within specification?**	Yes ▶ No ▶	CHECK rotor drum and bolt circle runout. GO to **G7**. GO to **G5**.
G5	MATCH MOUNTING		
	• Mark the high runout location on the tire and also on the wheel. Break the assembly down and rotate the tire 180 degrees (halfway around) on the wheel. Inflate the tire and measure the runouts. • **Are tires/wheels balanced?**	Yes ▶ No ▶	BALANCE assembly and INSTALL on vehicle. PERFORM road test. If high spot is not within 101.6 mm (4 inches) of first high spot on the tire, GO to **G6**.

Official Licensed Product
Ford Motor Company

DIAGNOSIS AND TESTING (Continued)

PINPOINT TEST G: VIBRATION (Continued)

Test Step		Result ▶	Action to Take
G6	WHEEL RUNOUT		
	• Dismount tire and mount wheel on wheel balancer. Measure runouts on both flanges. Refer to Section 04-04.	Yes ▶	LOCATE and MARK low spot on wheel and INSTALL tire, matching high spot on wheel. BALANCE assembly and PERFORM road test.
	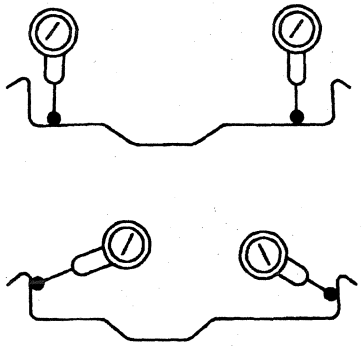 F8774-A	No ▶	REPLACE wheel. CHECK runouts on new wheel. If new wheel is within limits, LOCATE and MARK the low spot. INSTALL tire, matching high spot of tire with low spot of wheel. BALANCE assembly and INSTALL on vehicle. PERFORM road test.
	• **Is there proper runout?**		
G7	INSPECT BRAKES		
	• Inspect the rear brake shoes and linings. Refer to Section 06-00. • **Are the rear brake shoes and linings OK?**	Yes ▶	INSPECT and SERVICE the front disc brakes as necessary. REFER to Section 06-00. PERFORM road test when complete.
		No ▶	SERVICE the rear brake shoes and linings as necessary. PERFORM road test when complete.
G8	INSPECT WHEELS		
	• If wheels are equipped with locking lug nuts, check that proper counterbalance wheel weight is installed opposite lug nut. • **Is wheel weight correct?**	Yes ▶	GO to **G9**.
		No ▶	INSTALL counter. BALANCE wheel weight opposite locking lug nut. PERFORM road test.
G9	FRONT TIRES		
	• Spin front tires with a wheel balance spinner while vehicle is raised on hoist. Feel for vibration in front fender or while seated in vehicle. • **Is vibration felt?**	Yes ▶	BALANCE front wheels. PERFORM road test.
		No ▶	GO to **G10**.
G10	REAR TIRES		
	• Engage drivetrain while vehicle is raised on hoist. Carefully accelerate the drive wheels while feeling for vibration. • **Is vibration felt?**	Yes ▶	GO to **G11**.
		No ▶	GO to **G13**.
G11	DRIVETRAIN		
	• Remove rear wheels. Secure brake drums, if so equipped, by installing lug nuts, reversed. Carefully accelerate the drivetrain while feeling for vibration. • **Is vibration felt?**	Yes ▶	GO to **G12**.
		No ▶	BALANCE rear wheels. PERFORM road test.
G12	WHEEL BALANCE		
	• Balance all wheels not previously balanced. Road test vehicle. • **Are wheels balanced?**	Yes ▶	GO to **A1**.
		No ▶	GO to **G13**.

Official Licensed Product Ford Motor Company

DIAGNOSIS AND TESTING (Continued)

PINPOINT TEST G: VIBRATION (Continued)

Test Step		Result ▶	Action to Take
G13	SUBSTITUTE WHEELS AND TIRES		
	• Substitute a known good set of wheels and tires. Road test vehicle. • **Is vibration felt?**	Yes ▶	REFER to Vibration and Roughness under Inspection and Verification in this section.
		No ▶	INSTALL the original tire / wheel assemblies, one by one, road testing at each step, until the defective tire(s) is identified. REPLACE tire(s) as necessary and RETEST.

Component Test

Ball Joints, Front Suspension Upper and Lower Arm, Twin I-Beam Front Axle Equipped with Joints

Prior to performing any inspection of front suspension lower arm ball joints (3050) or front suspension upper ball joints (3049), adjust the front wheel bearings as described in Section 04-01A or Section 04-01B.

1. Raise the vehicle and place safety stands under the I-beam axle beneath the spring.
2. Have an assistant grasp the lower edge of the tire and move the wheel in and out.

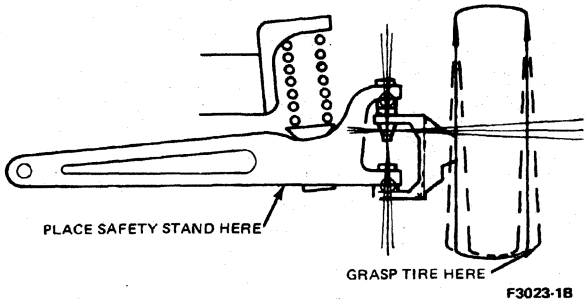

F3023-1B

3. While the wheel is being moved, observe the lower spindle arm and the lower part of the axle jaw. A 0.794-mm (1/32-inch) or greater movement between the lower portion of the I-beam and the lower spindle arm indicates that the front suspension lower arm ball joint must be replaced.
4. To check the front suspension upper ball joints, grasp the upper edge of the tire and move the wheel in and out. A 0.794-mm (1/32-inch) or greater movement between the upper spindle arm and the upper portion of the I-beam indicates that the front suspension upper ball joint must be replaced.

ADJUSTMENTS

Wheel Bearings, Front

1. Raise the vehicle until the tire clears the floor.
2. Grasp each front tire at the top and bottom and push the wheel (1007) inward and outward while lifting the weight of the tire off the front wheel bearings.

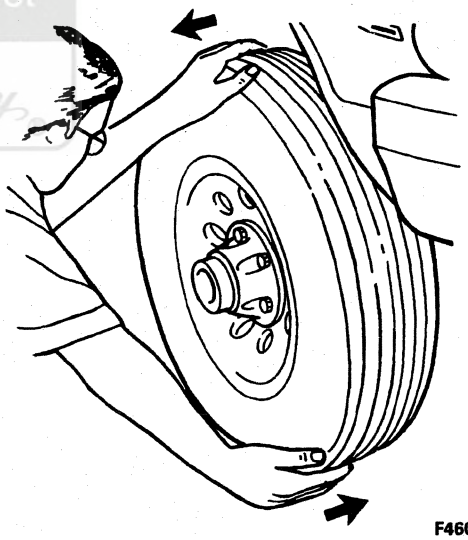
F4604-B

3. Make sure the wheel rotates freely and the brake pads are retracted sufficiently to allow movement of the wheel assembly.
4. If the wheel / hub-rotor is loose on the front wheel spindle (3105) or does not rotate freely, adjust the front wheel bearings as described in the appropriate section in Group 04.

Wheel Alignment, Front

Refer to Front Wheel Alignment Specifications in this section.

Licensed Product
Ford Motor Company

ADJUSTMENTS (Continued)

CAUTION: Do not bend axles or radius arms to change alignment.

After front wheel alignment has been checked, make the necessary adjustments as described below.

Caster and Camber, F-250 Heavy Duty and F-350 4x2 Ball Joint System

SPECIAL SERVICE TOOL(S) REQUIRED

Description	Tool Number
Pitman Arm Puller	T64P-3590-F

1. Measure vehicle caster and camber.
   a. Refer to the alignment charts in the Specifications portion of this section to determine if the vehicle is within specifications.
   b. Note any difference between the actual measurements and the specification. This information will be used to select the correct service adjuster.
2. If adjustment is necessary, determine the amount of caster / camber in the adjuster installed in the vehicle.
   a. Production adjusters have the amounts of caster and camber stamped in the top of the adjuster.
   b. The first number is the amount of caster; the second number is the amount of camber in degrees if the adjuster is installed in the right-hand axle position.
   c. If the adjuster is in the left-hand axle, the caster number is the opposite sign of the number shown. For example, a positive amount in the right-hand axle is a negative amount in the left axle, and a negative amount in the right-hand is a positive in the left-hand position.
3. NOTE: The assembly plant sometimes builds vehicles with adjusters that are not zero-degree type to control alignment. The following chart shows the alignment changes that will occur if the vehicle was originally built with zero-degree adjusters. Always check to see which adjuster has been installed (and its orientation) before making changes.

   Refer to the chart.

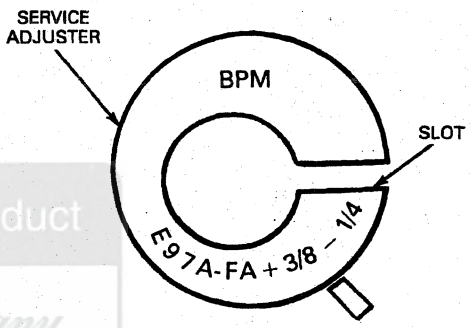

F8417-A

Ford Licensed Product Ford Motor Company

4x2 ADJUSTABLE CAMBER/CASTER

Service Adjuster Type (Degrees)	Position Slot in Axle (Degrees)	LH Axle		RH Axle	
		Camber Change (Degrees)	Caster Change (Degrees)	Camber Change (Degrees)	Caster Change (Degrees)
1/2	0	-0.5	0	+0.5	0
1	0	-1.0	0	+1.0	0
1-1/2	0	-1.5	0	+1.5	0
1/2	45	-0.25	+0.25	+0.25	+0.25
1	45	-0.75	+0.75	+0.75	+0.75
1-1/2	45	-1.00	+1.00	+1.00	+1.00
1/2	90	0	+0.5	0	+0.5
1	90	0	+1.0	0	+1.0
1-1/2	90	0	+1.5	0	+1.5
1/2	135	+0.25	+0.25	-0.25	+0.25
1	135	+0.75	+0.75	-0.75	+0.75
1-1/2	135	+1.00	+1.00	-1.00	+1.00
1/2	180	+0.5	0	-0.5	0
1	180	+1.0	0	-1.0	0
1-1/2	180	+1.5	0	-1.5	0
1/2	225	+0.25	-0.25	-0.25	-0.25
1	225	+0.75	-0.75	-0.75	-0.75
1-1/2	225	+1.00	-1.00	-1.00	-1.00

(Continued)

ADJUSTMENTS (Continued)

4x2 ADJUSTABLE CAMBER/CASTER (Cont'd)

Service Adjuster Type (Degrees)	Position Slot in Axle (Degrees)	LH Axle		RH Axle	
		Camber Change (Degrees)	Caster Change (Degrees)	Camber Change (Degrees)	Caster Change (Degrees)
1/2	270	0	-0.5	0	-0.5
1	270	0	-1.0	0	-1.0
1-1/2	270	0	-1.5	0	-1.5
1/2	315	-0.25	-0.25	+0.25	-0.25
1	315	-0.75	-0.75	+0.75	-0.75
1-1/2	315	-1.00	-1.00	+1.00	-1.00

4. Select a new service adjuster and its orientation in the axle to obtain the optimum caster / camber. Note that the caster change or camber change required to obtain the optimum settings must be added to amounts of caster / camber in the old or production adjuster.

   Use this example as a guide. If caster must be reduced 1.0 degree and camber increased +0.75 degree at the LH wheel and the existing adjuster has +0.25 degree caster as installed, select the 1 degree service adjuster and orient the slot 225 degrees from the straight-ahead position. In all cases, select the adjuster and orientation that will bring the alignment closest to the optimal settings.
5. Raise the vehicle and remove the front wheel.
6. Loosen the pinch bolt at the front suspension upper ball joint and pry the adjuster out of the axle with the blade of a screwdriver. If required, use Pitman Arm Puller T64P-3590-F to remove the adjuster.
7. Install the new service adjuster. Orient the slot as specified in the chart above.
8. Tighten the pinch bolt to 67-88 N·m (50-65 lb-ft).
9. Install front wheel and lower the vehicle.
10. Check alignment. If not at optimal caster / camber setting, additional adjustment of the rotation of the adjuster may be required to obtain optimal alignment settings.
11. Once optimal caster / camber has been achieved, reset front toe and clear vision to optimal settings.

Caster and Camber, F-250 Heavy Duty and F-350 4x4 Vehicles

SPECIAL SERVICE TOOL(S) REQUIRED

Description	Tool Number
Pitman Arm Puller	T64P-3590-F

Caster and camber adjustment is provided by means of a series of interchangeable mounting sleeves (camber adjusters) for the upper ball joint stud. There is one adjuster available for caster.

1. Measure camber with available alignment equipment. If camber is out of specification, proceed to Step 2.
2. Raise vehicle on hoist and remove the front wheels.
3. Remove the upper ball joint cotter pin and nut.
4. Loosen the lower ball joint nut to the end of the stud.
5. Strike the inside of the spindle near the upper and lower ball joints to break the spindle loose from the ball joint studs.
6. Remove the camber adjuster sleeve. If required, use Pitman Arm Puller T64P-3590-F to remove the adjuster from the spindle.
7. Install the replacement service adjuster.
   - To increase camber (more positive), point the arrow on the adjuster outboard.
   - To decrease camber (more negative), point the arrow on the adjuster inboard.
8. NOTE: Excessive spindle turning efforts, causing poor steering returnability, may result if the fastener tightening sequence described in the following steps is not followed exactly.

   Remove the lower ball stud nut and apply Loctite® 242 or equivalent to the lower stud.
9. Hand-start the lower nut and partially tighten to 54 N·m (40 lb-ft).
10. Install the new upper nut and tighten to 115-135 N·m (85-100 lb-ft). Advance the nut to the next castellation and install a new cotter pin.
11. Finish tightening the lower nut to 128-149 N·m (95-110 lb-ft).
12. Install the wheel and lower the vehicle.

ADJUSTMENTS (Continued)

13. Check camber and set toe according to alignment procedure.

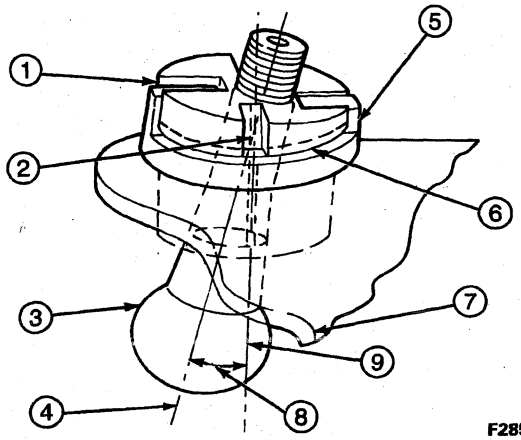

F2852-E

Item	Part Number	Description
1	—	Slots in Sleeve Engage Lugs to Prevent Rotation of Sleeve Which Would Result in Change of Caster Angle
2	—	Split in Sleeve Allows Sleeve to Expand When Ball Stud Nut Is Tightened, Locking Sleeve and Ball Stud in Location
3	—	Ball Stud (Part of 3049)
4	—	Ball Stud Axis
5	—	Support Collar with Integral Indexing Lugs Welded to Axle Arm Stamping
6	—	Step in Sleeve for Engagement of 2-Jaw Puller When Necessary for Removal
7	—	Axle Stamping (Part of 3002)
8	—	Angle at Which Sleeve Holds Ball Studs Determines Camber/Caster
9	—	Sleeve and Support Collar Axis (Also the Ball Stud Axis When 0° Camber Sleeve Is Installed)

Caster, F-250 Heavy Duty and F-350

The caster angle on a leaf spring type suspension can be adjusted by either installing new camber adjusters for the upper ball joint stud or inserting a shim between the spring and axle. Shims are available in zero-degree, one-degree and two-degree increments. The zero-degree shim is used to adjust side-to-side height.

1. **CAUTION: If possible, caster adjustment should always be done on the right front axle to avoid changing front driveshaft alignment.**

   To adjust caster, raise the vehicle and support the front axles on safety stands.
2. Loosen U-bolt nuts and separate spring from axle.
3. Install caster shims between spring and axle.
   a. Position the thin edge of the shim toward the front of the vehicle to increase caster, thin edge to the rear to decrease caster.
   b. Caster shims installed on the left axle will change the front driveshaft angle. If a caster shim is used on the left axle, driveshaft angles must be checked and conform to specifications in Section 05-00 of the Powertrain, Drivetrain Manual. Always attempt to correct side-to-side caster variations by adjusting the right axle caster.
4. Tighten U-bolt nuts until all nuts contact cap. Tighten nuts to 204-282 N·m (150-210 lb-ft).

Caster and Camber, F-Super Duty Monobeam Non-Driving Axle

Caster and camber are not adjustable on the F-Super Duty.

Toe

Refer to toe specifications in this section.

The steering linkage has adjustments at the tie rod end (3A131). First, remove the horn pad and make sure the steering wheel is installed properly as described in Section 11-04. With steering wheel locked in place, set toe to correct specification.

1. Loosen the clamp bolts for the adjusting sleeve.
2. Rotate the sleeve until the correct toe alignment is obtained.

ADJUSTMENTS (Continued)

3. NOTE: Lubricate clamp fasteners prior to tightening.

   With the clamps 4.76 mm (3/16 inch) from the end of the sleeve on 4x4 models and centered between the adjusting sleeve lock ring protrusions, position the bolts as described below.

   a. After setting toe, the two clamp bolts/nuts on each adjusting sleeve must be positioned within a limit of 45 degrees (plus/minus) as shown with the threaded end of the bolts on the left-hand sleeve pointing toward the front of the vehicle and the threaded end of the bolts on the right-hand sleeve facing rearward.

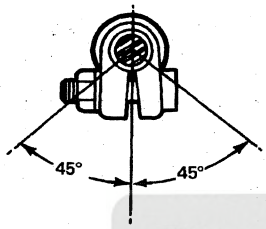

F8241-A

   b. F-Super Duty only: after setting toe, the clamp bolt/nut on the right (tie rod) adjusting sleeve must be positioned within a limit of 45 degrees (plus/minus) as shown with the threaded end of the bolt pointing forward.

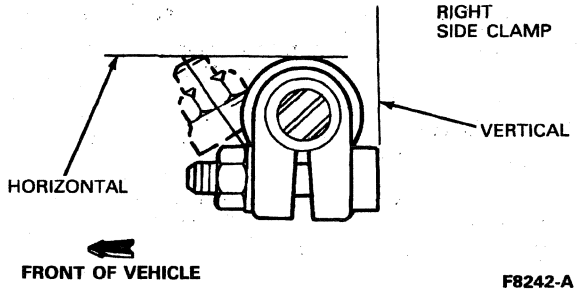

F8242-A

   c. After setting toe, the clamp bolt/nut on the left (drag link) adjusting sleeve must be positioned within a limit of 45 degrees (plus/minus) as shown with the threaded end of the bolt pointing forward.

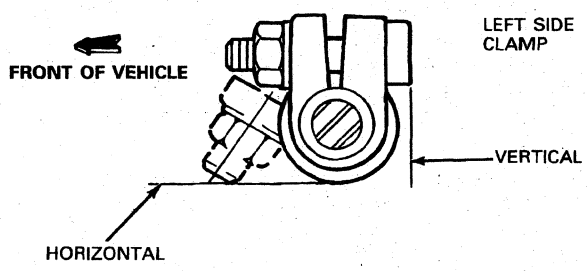

F8243-A

4. Recheck the toe alignment to make sure no changes occurred as the clamp nuts were tightened.

Vehicle Lean Correction

Front Lean

Measure the left and right front wheelhouse openings to ground as depicted in Vehicle Lean in the Diagnosis and Testing portion of this section. Refer to Lean (Side-to-Side Height Difference) in the Specifications portion of this section for the specified limits on their side-to-side difference or lateral tilt. A vehicle within these limits would not have an objectionable lean appearance. However, if the lean is objectionable, perform the following to adjust.

Vehicles with Front Coil Springs

If there is a side-to-side difference of 19 mm (3/4 inch) or more, remove the high side front coil spring (5310) from the vehicle and compare it with a service replacement part having the same part number.

If the free height of the original equipment front coil spring exceeds the free height of the service part by 13 mm (1/2 inch), install the service part in this location. If the free height of the original front coil spring is smaller by at least 13 mm (1/2 inch), remove the low side front coil spring. Compare the service front coil spring to both of the original front coil springs and select the two front coil springs most evenly matched. Install the higher front coil spring at the low side.

Vehicles with Front Leaf Type Springs

A service shim (D7TZ-5742-A) is available that installs between the spring and the axle.

For F-Super Duty Motorhome Chassis, follow instructions provided with Vehicle Attitude Kit F1TZ-5A581-A.

ADJUSTMENTS (Continued)

Rear Lean

A side-to-side lean at the rear of the vehicle can be adjusted by approximately 10 mm (3/8 inch) by installing a shim between the rear spring (5560) and rear axle (4001) on the low side of the vehicle. A "low at the rear" vehicle can be raised approximately 10 mm (3/8 inch) by installation of one shim on each side. Use the following procedure to install the shim (D7TZ-5742-A).

1. Raise the vehicle frame until the weight is off the rear springs but with the tires still touching the floor.
2. Loosen the spring U-bolts to allow the rear axle to separate from the spring approximately 13 mm (1/2 inch).
3. Position the shim (D7TZ-5742-A) between the spring and the spring seat and with the tie bolt head through the hole in the shim. On 4x4 vehicles, position the shim between the rear spring and axle spacer. Tape may be used to hold the shim in position.
4. Make sure the spring leaves are properly aligned and the spring U-bolts contact the edges of the spring assembly or axle seat.
5. Tighten the spring U-bolt sufficiently. The spring bolt end should extend through shim into axle seat hole.
6. Tighten U-bolt nuts to the following torque specifications:
   - 204-282 N·m (150-210 lb-ft) on F-250 Heavy Duty and F-350 4x2 and 4x4.
   - 299-406 N·m (220-300 lb-ft) on F-Super Duty vehicles.

   For F-Super Duty Motorhome Chassis, follow instructions provided in Rear Spring (Raise) Kit F1TZ-5A581-A.

Steering Stop

F-250 Heavy Duty and F-350 4x2 and F-Super Duty vehicles have built-in steering stops that cannot be altered.

F-250 Heavy Duty and F-350 4x4 vehicles use a welded-in screw and lock nut that is not adjustable.

Refer to Front Wheel Turn Angle Specifications chart in this section for the degree position of the front wheels when checking the stop adjustment angles.

SPECIFICATIONS

Front Wheel Turn Angle Specifications

Vehicle Type	Spindle Arm Stop Angle — Degrees	
	Spindle Pin	Ball Joint
F-250 Heavy Duty, F-350 (4x2) Regular Cab, Super Cab and Crew Cab	35.0	35.0
F-350 (4x4) Regular Cab, F-250 Heavy Duty (4x4)	—	30.3
F-Super Duty Motorhome Chassis	40.0	—

Front Wheel Alignment Specifications

The following charts indicate the acceptable range of alignment parameters after shipment from the assembly plant or aftermarket body-builder. Body-builders are responsible for assuring compliance with these specifications prior to sale to the final customer.

Alignment can be checked at any time to help diagnose a problem. Always perform an inspection of the front end components and repair where necessary prior to attempting to adjust the alignment to specification. Refer to Front End in the Diagnosis and Testing portion of this section.

Vehicle conditions for checking alignment:

- no driver and/or passenger
- full fluids
- all tires set to specified pressure
- all tire sizes comparable to original equipment
- vehicle configured to normal operated conditions (not to exceed max. front GAWR, max. rear GAWR, and/or max. GVW)
- Vehicles which exceed the maximum average caster value shown can result in shimmy concerns.
- Vehicles operated below the minimum average caster value shown can result in wander and poor steering returnability concerns.

Ford Motor Company

SPECIFICATIONS (Continued)

OPTIMUM CASTER, CAMBER AND TOTAL TOE SETTINGS

Vehicle	Camber Optimum ± Range	Caster Min.	Caster Max.	Total Toe Optimum ± Range	Camber Split Optimum ± Range	Caster Split Optimum ± Range
F-250 Heavy Duty 4x2 and 4x4	.25° ± .5°	2.0°	6.0°	.06° ± .25°	.0° ± .4°	-.5° ± .4 °
F-350 SRW	.5° ± .5°	2.0°	6.0°	.06° ± .25°	.0° ± .4°	-.5° ± .4°
F-350 DRW	.5° ± .5°	1.0°	4.5°	.06° ± .25°	.0° ± .4°	-.5° ± .4°
F-350 4x4	.0° ± .5°	2.0°	4.75°	.06° ± .25°	.0° ± .4°	-.5° ± .4°
F-Super Duty	.0° ± .3°	2.0°	5.0°	.06° ± .25°	.0° ± .4°	0.0° ± .4°

LEAN (SIDE-TO-SIDE HEIGHT DIFFERENCES)

Vehicle	Front Wheelhouse Opening	Rear Wheelhouse Opening	Rear End of Pickup Box
All Except Motorhome	15 mm Maximum (5/8 Inch)	20 mm Maximum (3/4 Inch)	20 mm Maximum (3/4 Inch)

DOGTRACKING

Vehicle	Centerline of Front Tires Compared to Centerline of Rear Tires
All Except Motorhome	30 mm Maximum (1-1/4 Inch)
Motorhome	0

TORQUE SPECIFICATIONS

Description	N·m	Lb-Ft
Pinch Bolt at Upper Ball Joint	67-88	50-65
U-Bolts, F-250 Heavy Duty, F-350 4x2 and 4x4	204-282	150-210
U-Bolts, F-Super Duty Vehicles	299-406	220-300
U-Bolts, For F-Super Duty Motorhome — follow instructions provided in Kit F1DT-5A581-AA.	149-203	110-150
Upper Shock Absorber Attachment	34-47	25-35

(Continued)

TORQUE SPECIFICATIONS (Cont'd)

Description	N·m	Lb-Ft
Lower Shock Absorber Attachment	60-81	45-60
F-250 Heavy Duty Upper Ball Stud Nut	115-135	85-100
F-250 Heavy Duty Lower Ball Stud Nut	128-149	95-110

SPECIAL SERVICE TOOLS/EQUIPMENT

SPECIAL SERVICE TOOLS REQUIRED

Tool Number/ Description	Illustration
T64P-3590-F Pitman Arm Puller	T64P-3590-F

ROTUNDA EQUIPMENT

Model	Description
007-0056A	Radial Runout Gauge

Unlicensed Product Ford Motor Company

SECTION 04-01A Suspension, Front, 4x2

SUBJECT	PAGE
VEHICLE APPLICATION	04-01A-1
DESCRIPTION AND OPERATION	
Axle	04-01A-2
Component Replacement	04-01A-2
Components	04-01A-1
Fasteners, Suspension	04-01A-2
Shock Absorber	04-01A-2
Suspension	04-01A-1
Wheel Bearing and Wheel Hub	04-01A-4
DIAGNOSIS AND TESTING	
Suspension and Wheel Hubs, Front	04-01A-4
REMOVAL AND INSTALLATION	
Axle Pivot Bracket, F-250 Heavy Duty and F-350	04-01A-28
Axle Pivot Bushing	04-01A-29
Axle, Front, F-Super Duty	04-01A-27
Axle, I-Beam, Front	04-01A-28
Ball Joint, F-250 Heavy Duty and F-350	04-01A-21
Bumper, Front, F-250 Heavy Duty and F-350	04-01A-35
Bumper, Front, F-Super Duty Chassis Cab	04-01A-36
Bumper, Front, F-Super Duty Motorhome Chassis	04-01A-36
Bushing, Spindle, F-Super Duty	04-01A-22
Camber Adjuster, F-250 Heavy Duty and F-350 with Ball Joints	04-01A-24

SUBJECT	PAGE
REMOVAL AND INSTALLATION (Cont'd.)	
Grease Seal and Bearing	04-01A-17
Insulators, Radius Arm	04-01A-27
Radius Arm	04-01A-25
Sensor Indicator, Anti-Lock Brake	04-01A-18
Shock Absorber, F-250 Heavy Duty and F-350	04-01A-19
Shock Absorber, F-Super Duty	04-01A-19
Spring, Coil, F-250 Heavy Duty and F-350	04-01A-5
Spring, F-Super Duty	04-01A-6
Stabilizer Bar, F-250 Heavy Duty and F-350	04-01A-31
Stabilizer Bar, F-Super Duty Chassis Cab	04-01A-33
Stabilizer Bar, F-Super Duty Motorhome Chassis	04-01A-34
Bushing	04-01A-35
Track Bar, F-Super Duty Chassis Cab	04-01A-31
Wheel Hub Bolt	04-01A-20
Wheel Spindle, F-250 Heavy Duty and F-350	04-01A-12
Wheel Spindle, F-Super Duty	04-01A-14
ADJUSTMENTS	
Wheel Bearings	04-01A-37
SPECIFICATIONS	04-01A-38
SPECIAL SERVICE TOOLS/EQUIPMENT	04-01A-39

VEHICLE APPLICATION

F-Series

DESCRIPTION AND OPERATION

Suspension

The F-250 Heavy Duty and F-350 4x2 vehicles use front coil springs (5310) with the two I-beam type front axles. The front coil springs are mounted between the frame spring pocket and the axle.

The F-Super Duty Chassis Cab and Motorhome Chassis vehicles use tapered, single stage, constant rate leaf-type springs. The forward end of each spring is attached to a bracket on the frame sidemember. The rear end of each spring is shackled to a bracket on the frame sidemember.

Components

- Front wheel spindles (3105) transmit steering input, pivot on the front suspension lower and upper ball joints, and support front disc brake calipers (2B121).
- Front suspension ball joints connect front wheel spindle to outer ends of the front suspension.
- Front shock absorbers (18124) provide necessary suspension dampening control, and provide rebound control through internal design valvings.
- Front coil springs (5310) or leaf springs allow proper setting of suspension ride heights and control suspension travel during driving/handling maneuvers.
- Front stabilizer bar (5482) transmits force to control vehicle roll during cornering.

DESCRIPTION AND OPERATION (Continued)

Component Replacement

- Gas-pressurized front shock absorbers (18124) must be replaced as an assembly. The front shock absorbers can be serviced individually. Replace only the damaged parts.
- Front coil springs (5310) can be replaced individually.
- Front spring insulators (5414) can be replaced individually.
- Front wheel spindles (3105) can be replaced individually.
- Front wheel bearings (1216) can be replaced individually.
- Radius arms can be replaced individually.
- Front axles can be replaced individually.
- Front suspension lower arm ball joints (3050) can be replaced individually.
- Front stabilizer bar links (5K483) can be replaced individually.
- Front stabilizer bar (5482) can be replaced.
- Stabilizer bar bracket insulators can be replaced individually.
- Stabilizer bar brackets (5486) can be replaced individually.

Fasteners, Suspension

Suspension fasteners are important attaching parts that can affect performance of vital components and systems and result in major service expense. They must be replaced with fasteners of the same part number or with an equivalent part if replacement becomes necessary. **DO NOT** use a replacement part of lesser quality or substitute design. Torque values must be as specified during assembly to ensure proper retention of parts. New fasteners must be used whenever old fasteners are loosened or removed and when new components are installed.

Axle

One end of each axle is attached to the front wheel spindle (3105) and a radius arm. The other end is attached to a frame pivot bracket on the opposite side of the vehicle.

On F-Super Duty, the single I-beam axle is held to the leaf springs by spring seats and U-bolts and nuts. The front wheel spindle is held in place on the axle by a spindle pin, which pivots on bronze bushings that are pressed into the upper and lower eyes of the spindle. A thrust bearing is installed between the lower spindle eye and the axle. This bearing supports the load of the axle.

On F-250 Heavy Duty and F-350, the front wheel spindle is held in place on the axle by the tapered dowels of upper and lower ball joints, which are pressed into the spindle.

Shock Absorber

The hydraulic front shock absorbers (18124) are of the direct, double-acting type. They provide a continuous dampening effect both on compression and rebound. These front shock absorbers are of telescopic design with rubber grommets at the mounting points for quiet operation. The front shock absorbers are sealed and nonadjustable, and must be replaced as complete assemblies.

Official Licensed Product Ford Motor Company

DESCRIPTION AND OPERATION (Continued)

Suspension, F-250 Heavy Duty and F-350

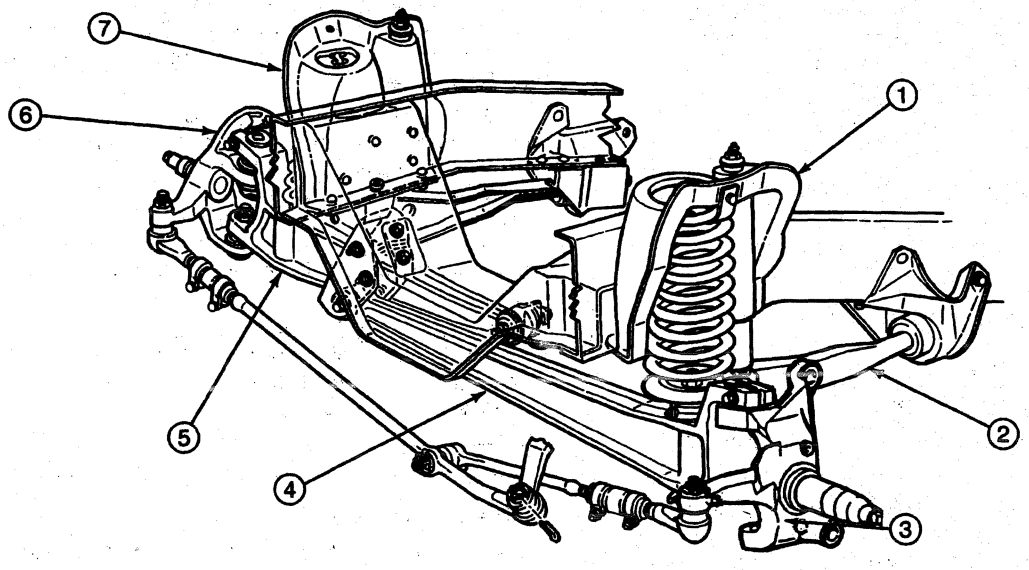

F4668-E

Item	Part Number	Description
1	5B315	Upper Spring Seat (LH)
2	3405	Radius
3	3106	Front Wheel Spindle (LH)
4	3007	Front Axle (LH)
5	3006	Front Axle (RH)
6	3105	Front Wheel Spindle (RH)
7	5B318	Upper Spring Seat (RH)

(Continued)

Suspension, F-Super Duty Chassis Cab

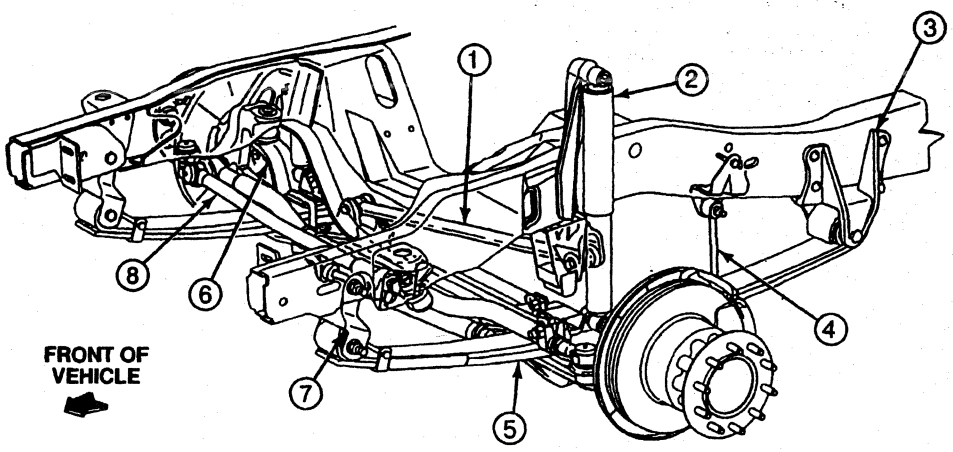

F6252-F

DESCRIPTION AND OPERATION (Continued)

Item	Part Number	Description
1	3B239	Front Track Bar Assy
2	18124	Front Shock Absorber
3	5340	Front Spring Mounting Bracket
4	5K483	Front Stabilizer Bar Link

(Continued)

Item	Part Number	Description
5	5310	Leaf Spring
6	3010	Front Solid I-Beam Axle
7	5K316	Front Spring Shackle
8	3B008	Drag Link Assy

Suspension, F-Super Duty Motorhome Chassis

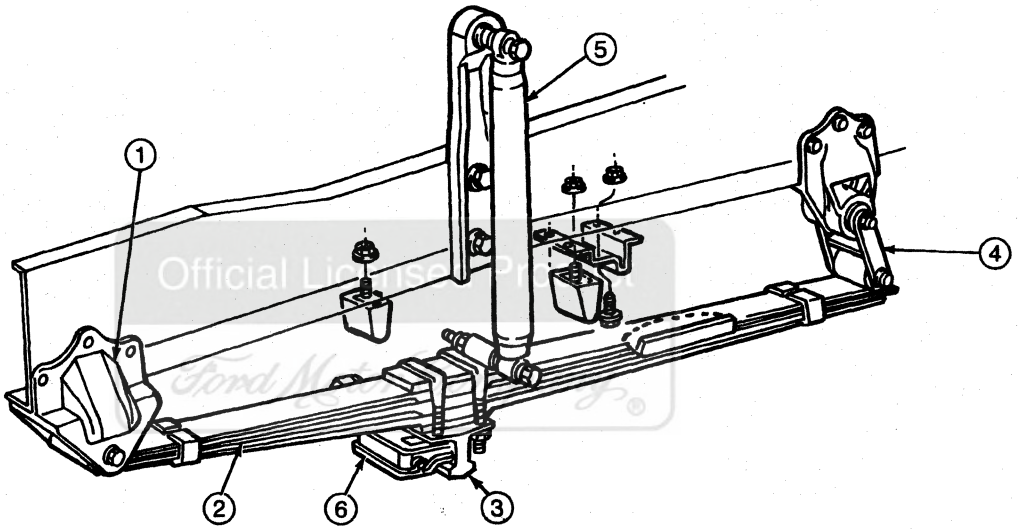

F7565-A

Item	Part Number	Description
1	5K316	Front Shackle Assy
2	5310	Front Spring Assy
3	3010	Front Axle Assy

(Continued)

Item	Part Number	Description
4	5340	Front Spring Mounting Bracket
5	18124	Front Shock Absorber
6	5486	Stabilizer Bar Bracket

Wheel Bearing and Wheel Hub

The front wheels (1007) attach to the wheel hub. The wheel hub is part of the front disc brake rotor. The front disc brake hub and rotor (1102) is supported by an inner and outer wheel bearing. The front disc brake hub and rotor is retained to the front wheel spindle (3105) with a nut, washer, nut retainer and cotter pin.

DIAGNOSIS AND TESTING

Suspension and Wheel Hubs, Front

Refer to Section 04-00 or Section 00-04 in this manual, or Section 05-03A, Section 05-03B or Section 05-03C in the Powertrain, Drivetrain Manual.

REMOVAL AND INSTALLATION

Spring, Coil, F-250 Heavy Duty and F-350

CAUTION: The axle must be supported on the jack throughout spring removal and installation and must not be permitted to hang by the front brake hose (2078). If the length of the front brake hose is not sufficient to provide adequate clearance for removal and installation of the front coil spring (5310), the disc brake caliper (2B120) must be removed from the front wheel spindle (3105) according to the procedures specified in Section 06-03. After removal, the disc brake caliper must be placed on the frame or otherwise supported to prevent suspending the disc brake caliper from the front brake hose. These precautions are absolutely necessary to prevent serious damage to the tube portion of the caliper hose assembly.

Removal

1. Raise the front of the vehicle and place safety stands under the frame and a jack under the axle.
2. Remove the wheel and tire assembly.

Front Spring and Shock Absorber, F-250 Heavy Duty and F-350

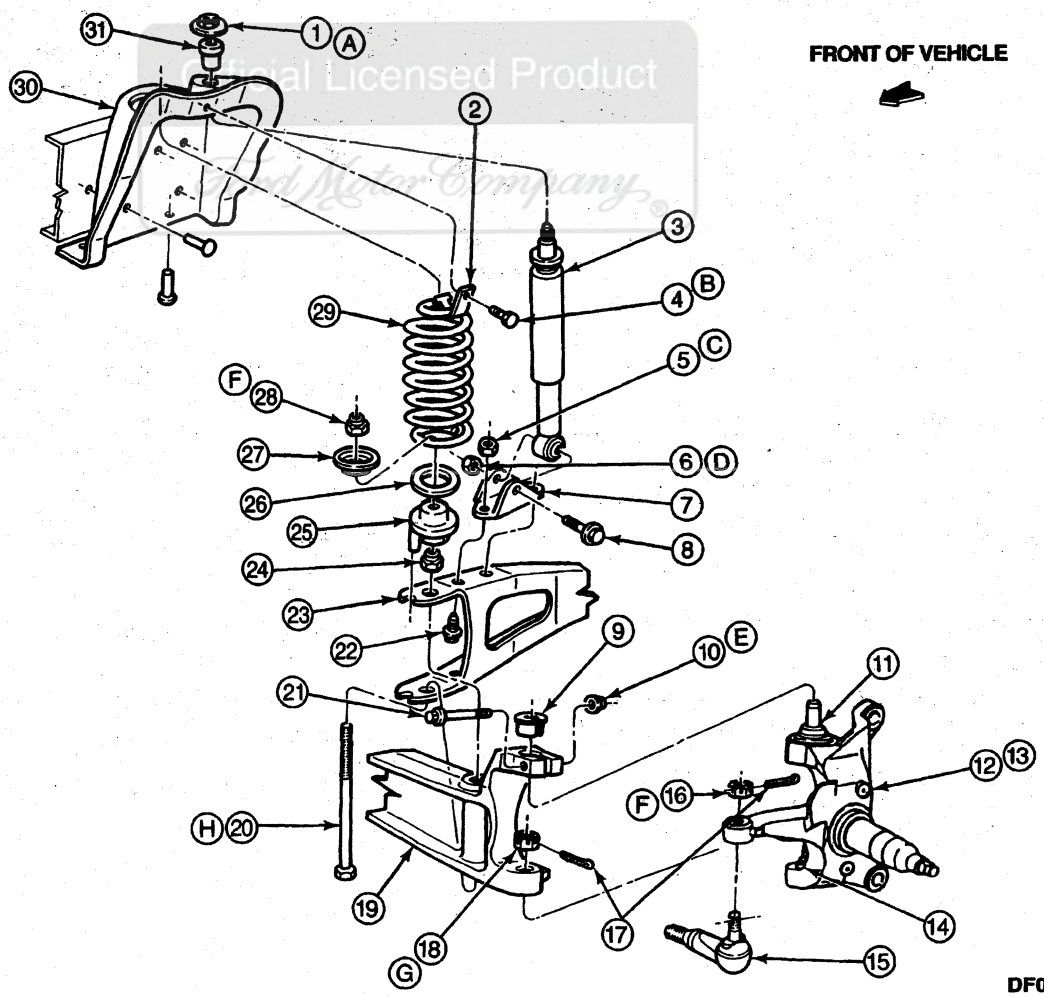

Official Licensed Product Ford Motor Company

REMOVAL AND INSTALLATION (Continued)

Item	Part Number	Description
1	N806246-S56	Nut and Washer
2	5A333	Retainer
3	18124	Front Shock Absorber
4	40949	Bolt
5	N62048	Nut
6	N806496	Nut
7	18126	Lower Shock Bracket
8	805033	Bolt
9	3B404	Caster and Camber Adjuster
10	800937	Nut
11	3049	Front Suspension Upper Ball Joint
12	3105	Front Wheel Spindle (RH)
13	3106	Front Wheel Spindle (LH)
14	3050	Front Suspension Lower Arm Ball Joint
15	3B008	Steering Arm and Drag Link
16	800895	Nut
17	642569	Cotter Pin
18	383489	Nut
19	3006	Front Axle
20	389574	Bolt
21	606085	Bolt
22	605920	Bolt

(Continued)

Item	Part Number	Description
23	3405	Radius Arm
24	34992	Nut
25	5A307	Lower Spring Seat
26	5414	Front Spring Insulator
27	5A349	Lower Spring Mounting Retainer
28	34992	Nut
29	5310	Front Coil Spring
30	5B315	Upper Spring Seat
31	18198	Insulator
A	—	Tighten to 34-48 N·m (25-35 Lb-Ft)
B	—	Tighten to 17-23 N·m (13-17 Lb-Ft)
C	—	Tighten to 32-58 N·m (23-42 Lb-Ft)
D	—	Tighten to 60-80 N·m (44-59 Lb-Ft)
E	—	Tighten to 68-92 N·m (50-68 Lb-Ft)
F	—	Tighten to 112-152 N·m (83-112 Lb-Ft)
G	—	Tighten to 112-152 N·m (83-112 Lb-Ft)
H	—	Tighten to 340-460 N·m (250-339 Lb-Ft)

Ford Motor Company Licensed Product

3. Disconnect the front shock absorber (18124) from the lower bracket.
4. Remove the spring upper retainer bolts or screws from the top of the spring upper seat, and remove the retainer.
5. Remove spring lower retainer nut to lower seat and front spring insulator (5414) and axle. Remove the retainer.

Installation

1. Install the front coil spring and slowly raise the axle.
2. Position the spring lower retainer over the stud, front spring insulator and seat. Install nut.
3. Position the upper retainer over the front coil spring and against the spring upper seat. Install screw.
4. Tighten the upper retainer nut and lower retainer nut to specifications as follows:

   upper retainer 17-23 N·m (13-17 lb-ft)

   lower retainer 112-152 N·m (83-112 lb-ft)

5. Connect the front shock absorber to the lower bracket. Install the lower bolt with the head toward the tire and tighten the nut to 60-80 N·m (44-59 lb-ft).
6. Install the wheel and tire assembly. Remove the jack and safety stands and lower the vehicle.

Spring, F-Super Duty

Removal

1. Raise vehicle frame (5005) until the weight is off the front springs with wheels still touching floor.
2. Support front axle with jacks to remove weight from the spring U-bolts.
3. Remove front shock absorber-to-spring spacer nut and washer. Disconnect the front shock absorber (18124) from the spring spacer.
4. Remove spring-to-front spring shackle nut and bolt.
5. Remove spring-to-front spring bracket nut and bolt.

REMOVAL AND INSTALLATION (Continued)

6. Remove the four U-bolt nuts. Remove the jack bracket or stabilizer bar bracket (5486). Remove the U-bolts.
7. Remove the spring from the vehicle.

Installation

1. Position the spring at the spring seat on the front axle assembly (3001) and align the spring eye with mating hole in front spring shackle.
2. Prior to installation, coat the bushing with Premium Long-Life Grease XG-1-C or -K or equivalent meeting Ford specification ESA-M1C75-B.
3. Gently guide the bolt through the shackle and spring eye.
4. Install the retaining nut. On F-Super Duty Chassis Cab vehicles, tighten to 149-201 N·m (110-148 lb-ft). On F-Super Duty Motorhome vehicles, tighten the nut to 200-280 N·m (148-207 lb-ft).
5. Align the spring eye with mating hole in spring bracket.
6. Coat the bushing with Premium Long-Life Grease XG-1-C or -K or equivalent meeting Ford specification ESA-M1C75-B.
7. Gently guide the bolt through the bracket and spring eye. Install the retaining nut. Tighten nut to 213-287 N·m (158-211 lb-ft).
8. Position the spring spacer on the locating boss in the spring (Chassis Cab only).
9. Install the U-bolts.
10. Install the jack bracket or stabilizer bar bracket on the forward U-bolt.
11. Install the four U-bolt nuts. Tighten to 213-287 N·m (157-211 lb-ft) for F-Super Duty Chassis Cab vehicles, and to 300-407 N·m (220-300 lb-ft) for F-Super Duty Motorhome Chassis vehicles.
12. Install shock-to-spring spacer nut and washer. Install front shock absorber to the spring spacer. Tighten to 61-73 N·m (45-54 lb-ft) on F-Super Duty Chassis Cab and to 300-407 N·m (220-300 lb-ft) on F-Super Duty Motorhome Chassis vehicles.
13. Remove the jacks from under the front axle assembly.
14. Lower the vehicle.

Official Licensed Product
Ford Motor Company

REMOVAL AND INSTALLATION (Continued)

Front Spring, Shock Absorber and Tracking Bar, F-Super Duty Chassis Cab

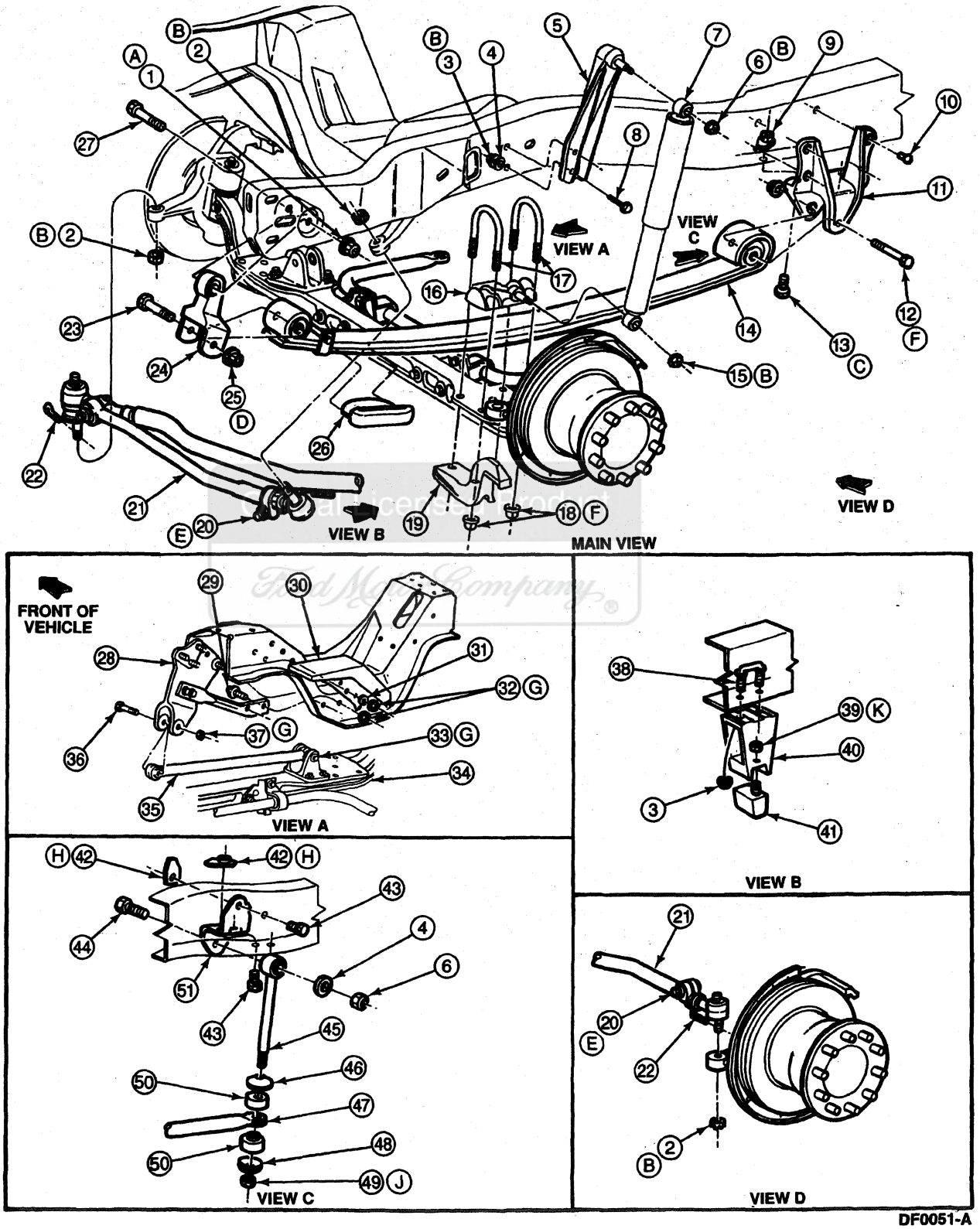

REMOVAL AND INSTALLATION (Continued)

Item	Part Number	Description
1	N620485	Nut
2	N800895	Nut
3	N620483	Nut
4	N801527	Washer
5	18183	Front Shock Absorber Mounting Bracket
6	N806055	Nut and Washer
7	18124	Front Shock Absorber
8	N802115	Bolt
9	N805007	Retainer and Nut
10	N647101	Rivet
11	5340	Front Spring Mounting Bracket
12	807660	Bolt
13	N802115	Bolt
14	5310	Spring
15	N806085	Nut
16	5458	Spring Spacer
17	N807282	U-Bolt
18	N620485	Nut
19	17A028	Jack Bracket
20	3287	Nut
21	3B008	Rod and Link Assy
22	N642569	Cotter Pin
23	800991	Bolt
24	5K316	Spring Shackle
25	N620484	Nut
26	5L302	Insulator
27	N601522	Bolt
28	3B241	Track Bar Bracket
29	N806158-S100	Bolt
30	6061	Front Engine Support Bracket (7.5L Engine Only)
31	630090-S2	Washer
32	N801670-S151	Nut
33	N620604-S100	Nut
34	3001	Front Axle Assembly

(Continued)

Item	Part Number	Description
35	3B239	Track Bar
36	N803960-S2	Bolt
37	N620604-S100	Nut
38	N805008	U-Bolt
39	N620468	Nut
40	3B251	Bumper Mounting Bracket
41	3020	Front Suspension Bumper
42	N802158	Nut
43	N605546	Bolt
44	N605704	Bolt
45	5K483	Front Stabilizer Bar Link
46	18171	Upper Washer
47	5K483	Front Stabilizer Bar Link
48	18041	Lower Washer
49	384485	Nut
50	5493	Lower Suspension Arm Stabilizer Bar Insulator
51	5C495	Front Stabilizer Link Mounting
A	—	Tighten to 170-230 N·m (125-170 Lb-Ft)
B	—	Tighten to 77-103 N·m (57-75 Lb-Ft)
C	—	Tighten to 113-153 N·m (84-112 Lb-Ft)
D	—	Tighten to 149-201 N·m (110-148 Lb-Ft)
E	—	Tighten to 81-122 N·m (60-90 Lb-Ft)
F	—	Tighten to 213-287 N·m (157-211 Lb-Ft)
G	—	Tighten to 149-201 N·m (110-148 Lb-Ft)
H	—	Tighten to 47-63 N·m (35-46 Lb-Ft)
J	—	Tighten to 24-31 N·m (18-24 Lb-Ft)
K	—	Tighten to 30-40 N·m (22-30 Lb-Ft)

Official Licensed Product Ford Motor Company

REMOVAL AND INSTALLATION (Continued)

Steering Damper, F-Super Duty Chassis Cab

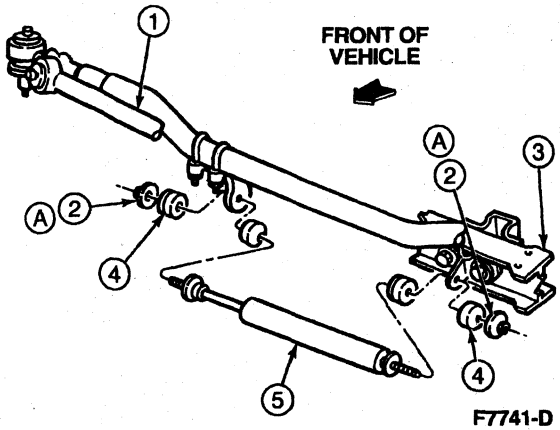

F7741-D

Item	Part Number	Description
1	3B008	Steering Linkage, Rod and Link Assy
2	N806888-S56	Nut and Washer Assy

(Continued)

Item	Part Number	Description
3	3001	Front Axle Assy
4	N806889	Steering Damper Insulator
5	3E561	Steering Damper Assy
A	—	Tighten to 34-46 N·m (25-33 Lb-Ft)

Licensed Product
Ford Motor Company

REMOVAL AND INSTALLATION (Continued)

Front Spring and Shock Absorber, F-Super Duty Motorhome Chassis

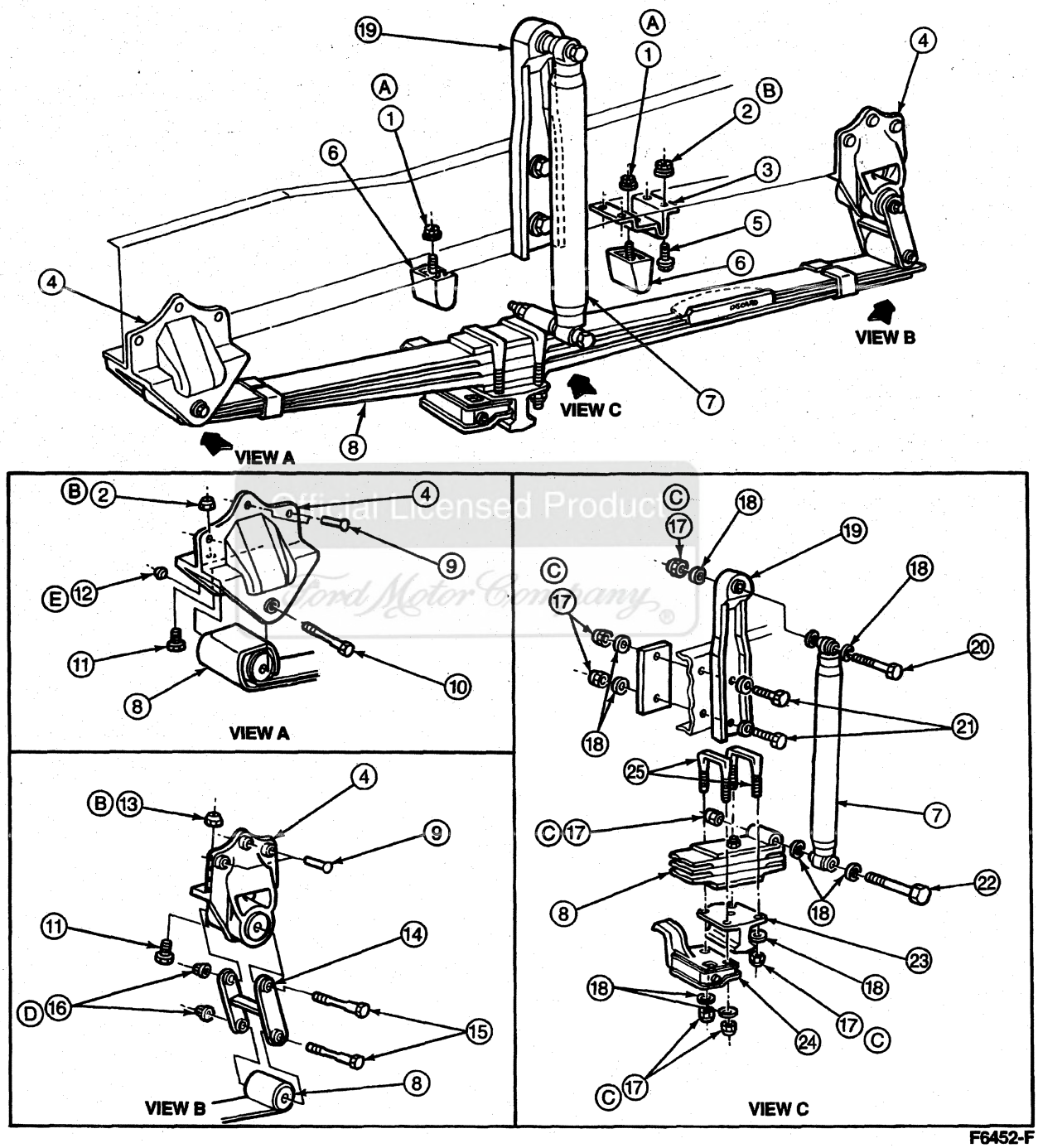

F6452-F

Item	Part Number	Description
1	N620468-S2	Nut
2	N620483-S2	Nut

(Continued)

Item	Part Number	Description
3	3A010	Bracket
4	5340	Front Spring Mounting Bracket

(Continued)

REMOVAL AND INSTALLATION (Continued)

Item	Part Number	Description
5	605817	Bolt
6	3020	Front Axle Bumper
7	18124	Front Shock Absorber
8	5310	Front Spring
9	N806041-S	Rivet
10	805284	Bolt
11	802115	Bolt
12	N620485-S2	Nut
13	N620483-S2	Nut
14	5B311	Shackle
15	805399	Bolt
16	N620484-S56	Nut
17	384032-S2	Nut
18	44882	Washer
19	18183	Front Shock Absorber Mounting Bracket

(Continued)

Item	Part Number	Description
20	58749	Bolt
21	58742	Bolt
22	58756	Bolt
23	3001	Front Axle Assembly
24	5486	Stabilizer Bar Bracket
25	5455	U-Bolt
A	—	Tighten to 40-64 N·m (30-47 Lb-Ft)
B	—	Tighten to 77-110 N·m (57-81 Lb-Ft)
C	—	Tighten to 300-407 N·m (220-300 Lb-Ft)
D	—	Tighten to 68-92 N·m (50-68 Lb-Ft)
E	—	Tighten to 200-280 N·m (148-207 Lb-Ft)

Official Licensed Product Ford Motor Company

Steering Damper, F-Super Duty Motorhome Chassis

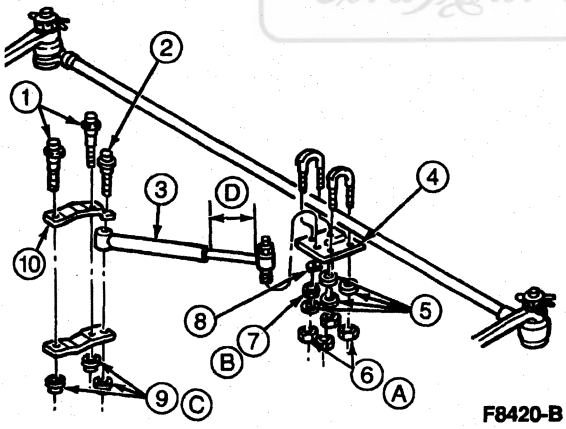

F8420-B

Item	Part Number	Description
1	N601423	Bolt, M12-1.75 x 75
2	N606586	Bolt, M12-1.75 x 75
3	3E651	Steering Shock Absorber
4	3E653	Steering Shock Absorber Bracket (LH)
5	N630088	Washer
6	N620468	Nut, M10 x 1.5

(Continued)

Item	Part Number	Description
7	33846	Nut
8	34809	Spring Lockwasher
9	N620483	Nut, M12 x 1.75
10	3E652	Steering Shock Absorber Bracket (RH)
A	—	Tighten to 25-34 N·m (18-25 Lb-Ft)
B	—	Tighten to 65-90 N·m (48-66 Lb-Ft)
C	—	Tighten to 25-34 N·m (18-25 Lb-Ft)
D	—	158.0 mm (6 Inches)

Wheel Spindle, F-250 Heavy Duty and F-350

Removal

1. Raise the front of the vehicle and install safety stands.
2. Remove the wheel and tire assembly.
3. Remove the disc brake caliper (2B120) from the rotor and wire it out of the way. Refer to Section 06-03.
4. Remove the dust cap, cotter pin, nut retainer, nut, washer and front wheel bearing (1216).

REMOVAL AND INSTALLATION (Continued)

5. Remove the rotor from the front wheel spindle (3105).

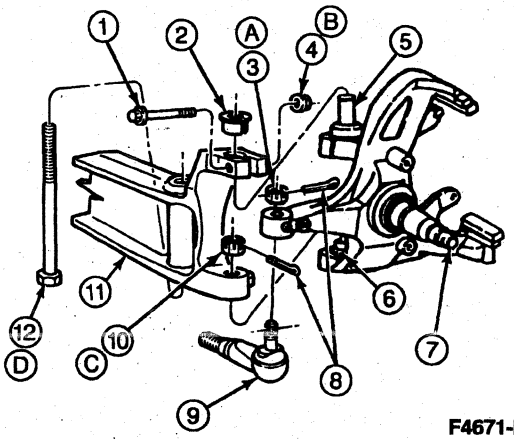

F4671-F

Item	Part Number	Description
1	606085	Clamp Bolt
2	3B404	Camber Adjuster
3	800895	Nut
4	800937	Nut
5	3049	Front Suspension Upper Ball Joint
6	3050	Front Suspension Lower Arm Ball Joint
7	3105	Front Wheel Spindle
8	642569	Cotter Pin
9	3B008	Steering Rod and Link Assy
10	383489	Nut
11	3001	Front Axle Assembly
12	388727	Bolt
A	—	Tighten to 77-103 N·m (57-75 Lb-Ft)
B	—	Tighten to 68-92 N·m (50-68 Lb-Ft)
C	—	Tighten to 113-153 N·m (83-112 Lb-Ft)
D	—	Tighten to 340-460 N·m (250-339 Lb-Ft)

6. Remove front disc brake rotor shield (2K004). Refer to Section 06-03.
7. Disconnect the steering linkage from the integral front wheel spindle and spindle arm by removing the cotter pin and nut and then removing the front wheel spindle tie rod from the spindle arm with Tie Rod End Remover TOOL-3290-D or equivalent.
8. Remove the cotter pin and castle nut from the lower ball joint stud.
9. Remove the nut from the axle clamp bolt and remove the bolt from the axle.
10. Remove the camber adjuster from the upper ball joint stud and axle beam. If required, use Ball Joint Removing Tool D81T-3010-B or equivalent to remove adjuster.
11. **CAUTION: Do not use a pickle fork to separate the ball joint from the axle as this will damage the seal and the ball joint socket.**

    Strike the inside area of the axle as shown to pop lower ball joints loose from the axle beam.
12. Remove the front wheel spindle and ball joint from the axle.

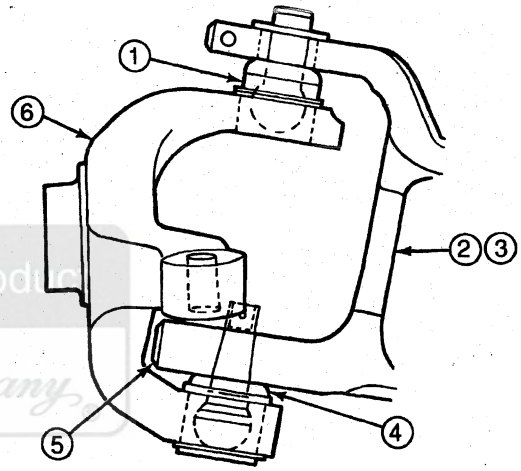

F6255-D

Item	Part Number	Description
1	3049	Upper Ball Joint
2	3007	Axle (LH)
3	3006	Axle (RH)
4	3050	Lower Ball Joint
5	—	Hit Here to Pop the Ball Joint Loose
6	3105	Spindle

Installation

1. Place the front wheel spindle and the ball joints into the axle.
2. Install lower ball joint stud nut. Tighten to 113-153 N·m (83-112 lb-ft) and continue tightening the castle nut until it lines up with the hole in the stud. Install the cotter pin.
3. NOTE: If camber adjustment is necessary, special adjusters must be installed. Refer to Section 04-00.

   Install the camber adjuster in the upper front wheel spindle over the upper ball joint stud. Align adjuster properly.
4. Install the clamp bolt and nut into the axle boss. Tighten the nut to 68-92 N·m (50-68 lb-ft).

Ford Motor Company Licensed Product

REMOVAL AND INSTALLATION (Continued)

5. Install the front disc brake rotor shield. Refer to Section 06-03.
6. Install the hub and rotor on the front wheel spindle.
7. Install the front wheel bearing, washer and nut. Adjust bearing end play.
8. Install the nut retainer, cotter pin and dust cap.
9. Install the disc brake caliper. Refer to Section 06-03.
10. Connect the steering linkage to the front wheel spindle. Tighten the nut to 76-104 N·m (56-76 lb-ft) and advance the nut as required for installation of the cotter pin.
11. Install the wheel and tire assembly.
12. Lower the vehicle.
13. Check and, if necessary, adjust the toe setting. Refer to Section 04-00.
14. Check the brakes for proper operation.

Wheel Spindle, F-Super Duty

Removal

1. Raise the front of the vehicle and install safety stands.
2. Remove the wheel and tire assembly.
3. Remove the disc brake caliper (2B120) from the rotor and wire it out of the way. Refer to Section 06-03.
4. Remove the dust cap, cotter pin, nut retainer, nut, washer and front wheel bearing (1216).
5. Remove the rotor from the front wheel spindle (3105).
6. Remove front disc brake rotor shield (2K004). Refer to Section 06-03.
7. Disconnect the steering linkage from the spindle arm by removing the cotter pin and nut, and remove front wheel spindle tie rod (3280) from the spindle arm with Tie Rod End Remover TOOL-3290-D or equivalent.
8. On Motorhome Chassis vehicles, disconnect the steering sector shaft arm drag link (3304) from the steering arm (left side) with Tie Rod End Remover TOOL-3290-D or equivalent.
9. Remove lock pin nut and lockwasher. Remove the lock pin.
10. Remove the upper and lower spindle pin plugs.
11. Using an appropriate punch, drive the spindle pin out from the top of the front axle assembly (3001).
12. Remove the front wheel spindle and thrust bearing.
13. Remove the spindle pin seal and thrust bearing.

Licensed Product
Ford Motor Company

Front Wheel Spindle, F-Super Duty Chassis Cab

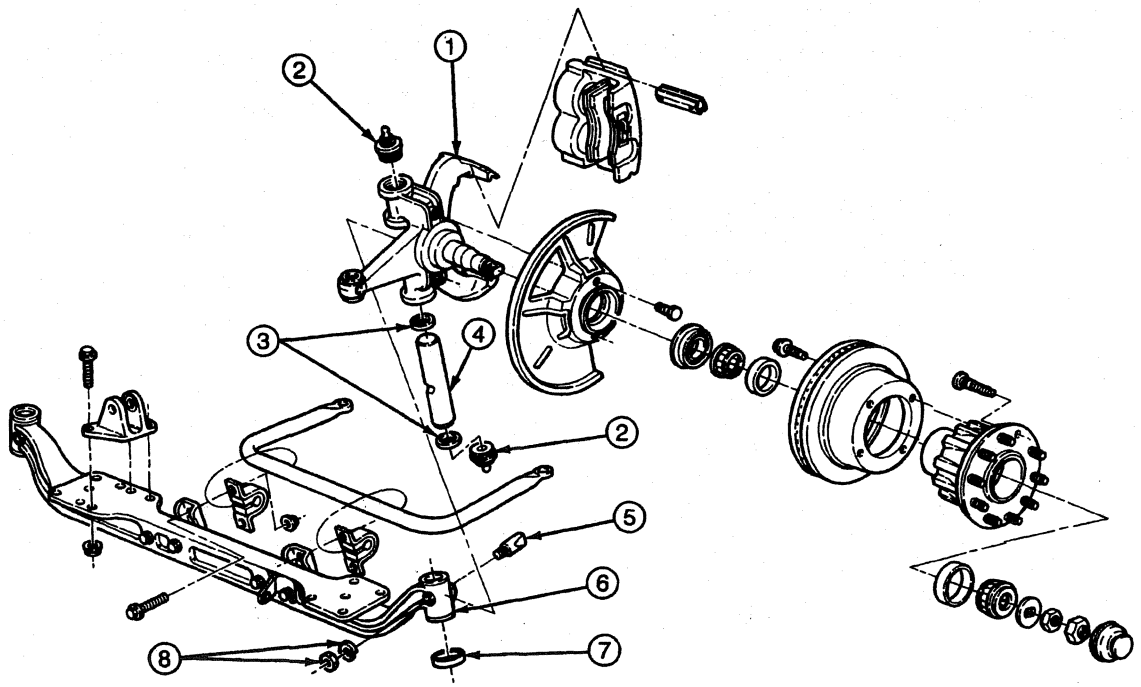

REMOVAL AND INSTALLATION (Continued)

Item	Part Number	Description
1	3105	Front Wheel Spindle
2	3B435	Grease Plug
3	3178	Spindle Pin Seal
4	3115	Spindle Pin

(Continued)

Item	Part Number	Description
5	3122	Spindle Pin Lock Bolt
6	3001	Front Axle Assembly
7	3123	Thrust Bearing
8	34793	Spindle Pin Lock Nut and Washer

Front Wheel Spindle, F-Super Duty Motorhome Chassis

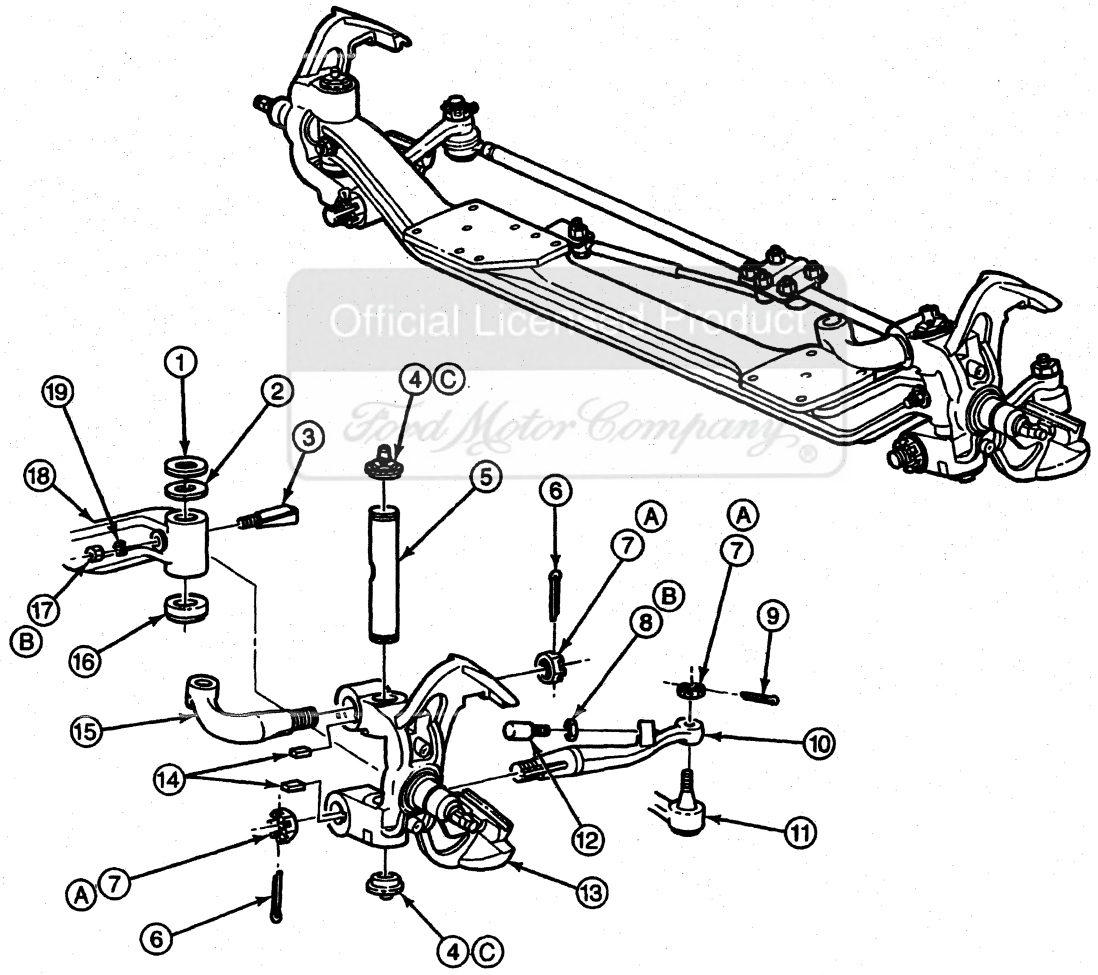

DF0052-A

Item	Part Number	Description
1	3178	Spindle Pin Seal
2	3117	Shim (3 Thicknesses)
3	3122	Lock Pin
4	3B435	Grease Plug
5	3115	Spindle Pin

(Continued)

Item	Part Number	Description
6	72109	Cotter Pin
7	383219-S2	Nut
8	33942-S2	Lock Nut
9	72071	Cotter Pin
10	3130	Spindle Arm

(Continued)

REMOVAL AND INSTALLATION (Continued)

Item	Part Number	Description
11	3280	Front Wheel Spindle Tie Rod
12	389029	Bolt
13	3105	Front Wheel Spindle
14	3138	Key
15	3146	Steering Arm
16	3123	Thrust Bearing
17	34671-S2	Nut

(Continued)

Item	Part Number	Description
18	3001	Front Axle Assembly
19	34793	Lockwasher
A	—	Tighten to 75-105 N·m (55-77 Lb-Ft)
B	—	Tighten to 50-70 N·m (37-52 Lb-Ft)
C	—	Tighten to 48-67 N·m (35-49 Lb-Ft)

Installation

1. Make sure the spindle pin hole in the front axle assembly is free of nicks, burrs, corrosion or foreign material. Clean bore as necessary and lightly coat the surface with a lithium-base grease such as Premium Long-Life Grease XG-1-C or -K or equivalent meeting Ford specification ESA-M1C75-B.
2. Install a new spindle pin seal with the metal backing facing up toward the bushing into the front wheel spindle.

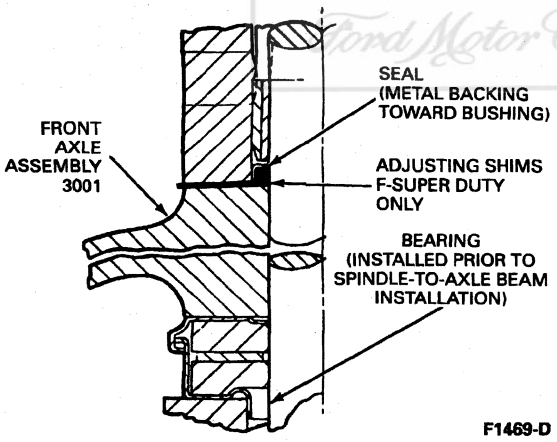

3. Gently press seal into position; do not distort the casing.
4. Install a new thrust bearing with the lip flange facing down toward the lower bushing.
5. Press until the bearing is firmly seated against the surface of the front wheel spindle.
6. Lightly coat the bushing surfaces with grease and place the front wheel spindle in position on the front axle assembly.
7. Hold the front wheel spindle with thrust bearing tightly in place against the front axle assembly and measure the space between the front axle assembly and the front wheel spindle at the top of the front axle assembly. If the vehicle uses shims, select the proper shims and install.
8. Install the spindle pin with the T stamped on one end toward the top. Align pin notch with lock pin hole in front axle assembly.
9. Insert the spindle pin through the bushings and front axle assembly from the top until the spindle pin notch and axle lock pin hole are aligned.
10. Install the lock pin with the threads pointing forward and the wedge groove facing the spindle pin notch. Firmly drive the lock pin into position and mount the lockwasher and nut. Tighten nut to 50-70 N·m (37-52 lb-ft).
11. Install the spindle pin plugs into the threads at the top and bottom of the front wheel spindle. Tighten the plugs to 48-67 N·m (35-49 lb-ft).
12. Lubricate the spindle pin and bushings with Premium Long-Life Grease XG-1-C or -K or equivalent meeting Ford specification ESA-M1C75-B, through both fittings until grease is visible seeping past the upper seal at the top and from the thrust bearing slip joint at the bottom. If grease does not appear, recheck the installation procedure to correct the problem. Lack of adequate lubrication will result in rapid failure of the spindle components.
13. Install the front disc brake rotor shield. Refer to Section 06-03.
14. Install the hub and rotor on the front wheel spindle.
15. Install the front wheel bearing, washer and nut. Adjust bearing end play.
16. Install the nut retainer, cotter pin and dust cap.
17. Install the disc brake caliper. Refer to Section 06-03.
18. Connect the steering tie rod and drag link to front wheel spindle, if so equipped. Tighten to 75-105 N·m (55-77 lb-ft). Advance the nut as required for installation of the cotter pin.
19. Install the wheel and tire assembly.
20. Lower the vehicle.
21. Check and, if necessary, adjust the toe setting. Refer to Section 04-00. Check the brakes for proper operation.

Ford Motor Company Licensed Product

REMOVAL AND INSTALLATION (Continued)

Grease Seal and Bearing

SPECIAL SERVICE TOOL(S) REQUIRED

Description	Tool Number
Bearing Cup Replacer	T73T-1202-A, T73T-4222A or T73T-4222B
Driver Handle	T80T-4000-W
Seal Replacer	T73T-1190-B

Removal

CAUTION: Sodium-base grease is not compatible with lithium-base grease and must not be intermixed. Therefore, do not lubricate front or rear wheel bearings without first identifying the type of original wheel bearing lubricant. Use of incompatible bearing lubricants can result in premature lubricant breakdown.

Wheel bearing lubricant is a lithium-base grease such as Premium Long-Life Grease XG-1-C or -K or equivalent meeting Ford specification ESA-M1C75-B.

If bearing adjustment does not eliminate looseness or rough and noisy operation, the hub and bearings must be cleaned, inspected and repacked with specified wheel grease. If the bearing cups or the cone and roller assemblies are worn or damaged, they must be replaced.

1. Remove the wheel and tire assembly.
2. **CAUTION: Do not let the disc brake caliper (2B120) hang with its weight on the front brake hose (2078) or the front brake hose might become stretched, twisted or ruptured.**

   Remove the disc brake caliper (refer to Section 06-03) and wire to the underbody to prevent damage. Do not disconnect the front brake hose from the caliper.
3. Remove the grease cap, cotter pin, retainer, adjusting nut and washer.
4. Remove the front wheel bearing (1216).
5. Pull the hub and rotor off the front wheel spindle (3105). Remove and discard the wheel hub grease seal (1190).
6. Remove the bearing cone and roller (1201) from the hub.
7. Remove all traces of old lubricant from bearings, hub and front wheel spindle.
8. Inspect the cups for scratches, pits or cracks. If the cups are worn or damaged, remove with a drift.
9. Clean the bearing cone and roller and front wheel bearing with solvent and dry thoroughly. Do not spin the bearings dry with compressed air.
10. Inspect the cones and rollers for cracks, nicks, brinelling or seized rollers. Inspect the grease retainer and replace if cracked, nicked, dented or worn.

Installation

1. If inner bearing cup (1202) or outer bearing cup was removed, install replacement inner and outer bearing cups in the hub with the appropriate bearing cup replacer tool (T73T-1202A, T73T-4222A or T73T-4222-B) and Driver Handle T80T-4000-W.

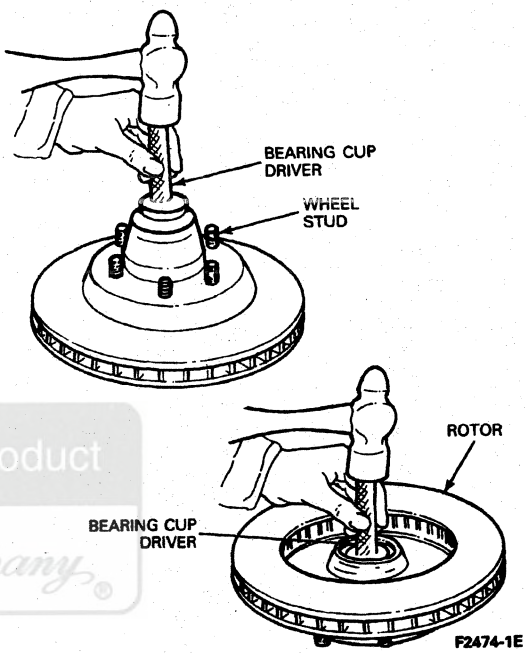

2. Properly seat cups in hub. The cups are properly seated when fully bottomed.
3. Replace grease retainers. Polish grease retainer journal on front wheel spindle with 400 grit sandpaper. Clean with clean cloth.
4. **CAUTION: Make sure front wheel spindle and hub are clean prior to application of lubricant.**

   Pack the inside of the hub with lithium-base grease such as Premium Long-Life Grease XG-1-C or -K or equivalent meeting Ford specification ESA-M1C75-B. Fill the hub until the grease is flush with the inside diameters of both bearing cups.
5. Pack the bearing cones and rollers with wheel bearing grease. Use Rotunda Wheel Bearing Packer 160-00045 or equivalent.

   If a packer is not available, work as much lubricant as possible between the rollers and cages. Lubricate the cone surfaces with grease.

Licensed Product Ford Motor Company

REMOVAL AND INSTALLATION (Continued)

6. NOTE: Different vehicles having different size bearings and wheel hub grease seals will require a different seal replacer.

   Place the bearing cone and roller in the bearing cup and install the new wheel hub grease seal with an appropriate tool such as Seal Replacer T73T-1190-B. Make sure the wheel hub grease seal is fully bottomed.

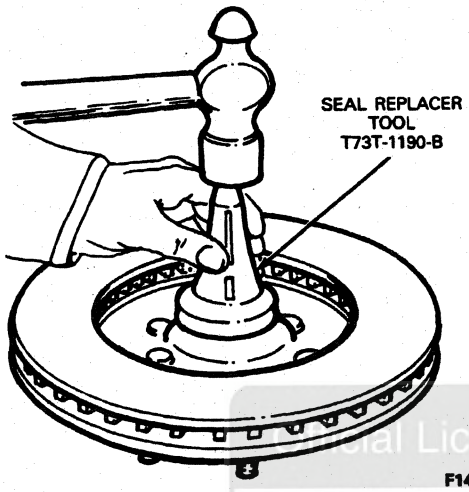

F1465-1D

7. **CAUTION: Keep the hub centered on the front wheel spindle to prevent damage to grease retainer or spindle threads.**

   Install the hub and rotor on the front wheel spindle.
8. Install the outer bearing cone and roller and front wheel outer bearing retainer washer (1195) on the front wheel spindle.
9. Install the adjusting nut and adjust the wheel bearing as described under Adjustments in this section.
10. Install the retainer and new cotter pin, bending both ends of cotter pin in opposite directions around retainer. Install grease cap.
11. Install the disc brake caliper. Refer to Section 06-03.
12. Install the wheel and tire.
13. Lower vehicle and tighten lug nuts (1012) to specification listed at the end of this section. Install the wheel cover (1130).
14. Before driving the vehicle, pump the brake pedal (2455) several times to restore normal brake pedal travel.

Sensor Indicator, Anti-Lock Brake

Removal

1. Raise vehicle on hoist.
2. Remove wheel and tire assembly.
3. Remove front disc brake caliper (2B121), rotor and hub assemblies. Refer to Section 06-03.

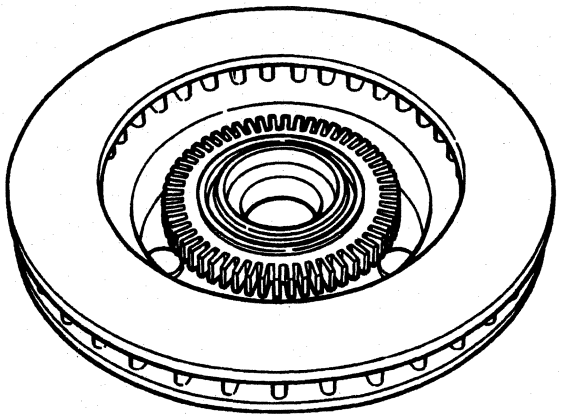
H8932-A

4. **CAUTION: Discard front brake anti-lock sensor indicator (2C182) after removal. Do not reuse old ring.**

   Using a suitable 3-jaw puller step plate and spacer, remove front brake anti-lock sensor indicator from hub.

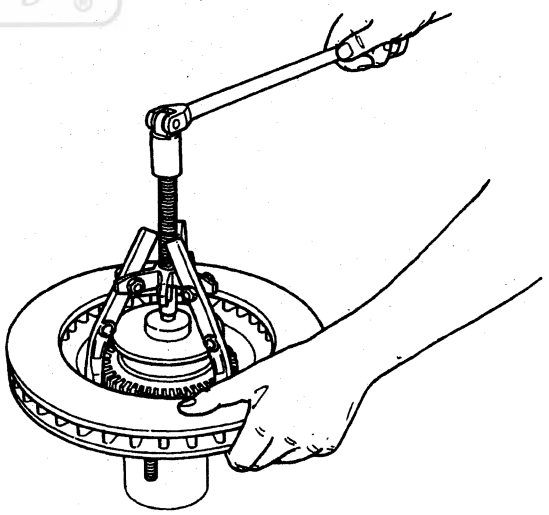
H8933-A

Installation

1. Support center of hub so that wheel studs do not rest on work surface.

REMOVAL AND INSTALLATION (Continued)

2. **CAUTION: When performing the following step, make sure indicator ring is pressed on straight.**

   Position new front brake anti-lock sensor indicator on front disc brake hub and rotor (1102). Using a suitable cylinder with 79-mm (3.1-inch) ID and 96-mm (3.8-inch) OD, press the front brake anti-lock sensor indicator onto the hub. The front brake anti-lock sensor indicator must be fully seated against the shoulder in the front disc brake hub and rotor.

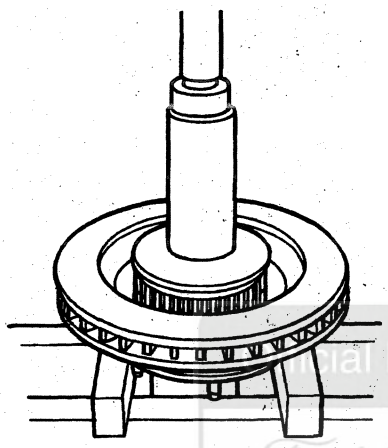

H8934-A

3. Install hub, rotor and caliper assemblies. Refer to Section 06-03.
4. Install wheel and tire assembly. Tighten wheel lug nuts (1012) to 115-142 N·m (85-105 lb-ft).

Shock Absorber, F-250 Heavy Duty and F-350

CAUTION: The low-pressure gas front shock absorbers (18124) are charged with nitrogen gas to 931 kPa (135 psi). Do not attempt to open, puncture or apply heat to the front shock absorbers.

Removal

1. Insert a wrench from the rear side of the upper spring seat to hold the front shock absorber retaining nut in place.
2. Loosen the stud by turning the hex provided on the exposed (lower) part of the stud and remove the nut and washer.
3. Disconnect the lower end of the shock absorber from the lower bracket by removing the nut and bolt.
4. Compress the front shock absorber and remove from vehicle.
5. Cut out the insulator from the upper spring seat.

Installation

1. Coat the upper spring seat with a soap solution and install a new one-piece insulator in the seat.
2. Insert the upper front shock absorber stud through the insulator.
3. Install the steel washer and hand-start the nut.
4. Insert a wrench from the rear of the upper spring seat to hold the upper nut stationary.
5. Tighten the hex on the front shock absorber to 34-48 N·m (25-35 lb-ft).
6. Position the front shock absorber in the lower bracket. Install the bolt so the bolt head faces the tire. Install the nut and tighten to 60-80 N·m (44-59 lb-ft).

Shock Absorber, F-Super Duty

Removal

1. Remove front shock absorber nut and bolt from the upper front shock absorber mounting bracket (18183).
2. Remove front shock absorber nut and bolt from the eyes on the spring spacer.
3. Remove the front shock absorber (18124) from the vehicle.

Installation

1. Position the front shock absorber in the upper front shock absorber mounting bracket. Install the nut and bolt and tighten to specification as follows.
   - F-Super Duty Chassis Cab: 53-72 N·m (39-53 lb-ft).
   - F-Super Duty Motorhome: 300-407 N·m (221-300 lb-ft).

Ford Motor Company Official Licensed Product

REMOVAL AND INSTALLATION (Continued)

2. Position the lower end of the front shock absorber in the spring spacer eyes. Install the nut and bolt and tighten to specification as follows.
   - F-Super Duty Chassis Cab: 53-72 N·m (39-53 lb-ft).
   - F-Super Duty Motorhome: 300-407 N·m (221-300 lb-ft).

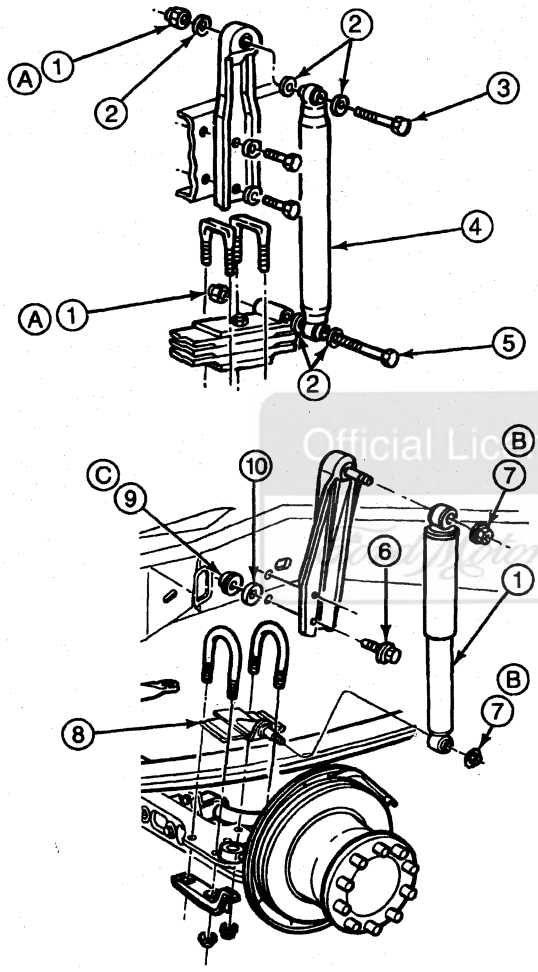

F7571-D

Item	Part Number	Description
1	34992-S2	Nut, 3/4-10 Hex Flange
2	383053-S2	Washer
3	58749-S2	Bolt, 3/4-10 x 4.0 Hex-Head
4	18124	Front Shock Absorber
5	58756-S2	Bolt, 3/4-10 x 7.0 Hex-Head
6	N802115-S2	Bolt
7	N806085-S8	Nut and Washer, M12-1.75 Hex
8	5458	Front Spring Plate Spacer

(Continued)

Item	Part Number	Description
9	N620483-S2	Nut
10	N801527-S2	Washer
A	—	Tighten to 300-407 N·m (221-300 Lb-Ft)
B	—	Tighten to 53-72 N·m (39-53 Lb-Ft)
C	—	Tighten to 68-92 N·m (50-68 Lb-Ft)

Wheel Hub Bolt

CAUTION: Service must be performed on any damaged components or the component that caused stud to require replacement.

Removal

1. Raise the vehicle and install safety stands.
2. Remove the wheel and tire assembly.
3. Remove the front disc brake hub and rotor (1102). Refer to Section 06-03.
4. Position the front disc brake hub and rotor in a press so ram pressure is not directly exerted on the surface of front disc brake hub and rotor. With appropriate press stock, press the lug bolt (1107) from the front disc brake hub and rotor. Discard the lug bolt.

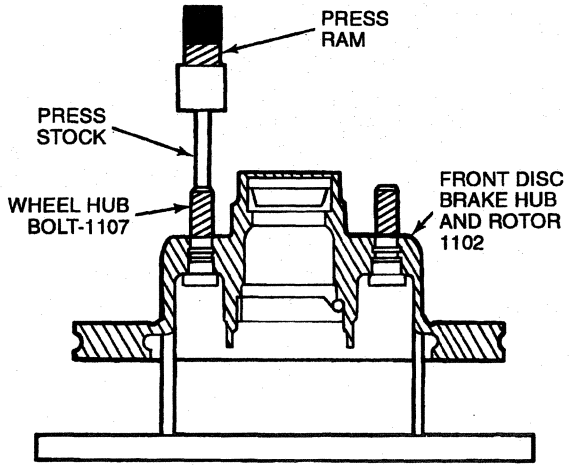

H4508-C

5. Inspect wheel lug nuts (1012) for damaged threads. Discard if damaged.

Installation

1. Position a new lug bolt in the hole. Align the serrations of the new lug bolt with the serration marks from the old lug bolt.

Official Licensed Product

REMOVAL AND INSTALLATION (Continued)

2. With a hammer, lightly tap the lug bolt until the serrations on the lug bolt are started in the hole. Make sure the lug bolt is not installed in an off-center position in front disc brake hub and rotor.
3. Position the front disc brake hub and rotor in a press so the front disc brake hub and rotor is supported on the wheel mounting flange. Allow enough clearance for the lug bolt to pass through the hole. Do not apply ram pressure directly on the rotor surface of front disc brake hub and rotor.
4. With appropriate press stock, press the lug bolt flush against the inner surface of the front disc brake hub and rotor.

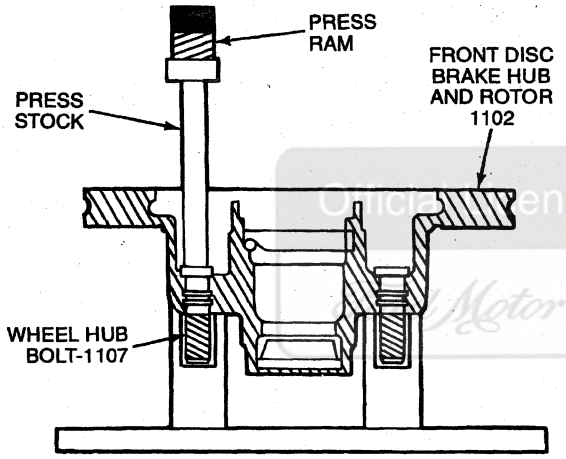

H4509-C

5. Install the front disc brake hub and rotor as described in Section 06-03.
6. Replace any damaged wheel lug nuts.
7. Install the wheel and tire.

Ball Joint, F-250 Heavy Duty and F-350

SPECIAL SERVICE TOOL(S) REQUIRED

Description	Tool Number
U-Joint Tool	T74P-4635-C
Ball Joint Remover	T94T-3010-AH

Removal

1. Remove the front wheel spindle (3105) and ball joint assembly from the axle.
2. NOTE: Lower ball joint **must** be removed first.

   Install the front wheel spindle in a vise and remove the snap ring from the lower ball joint.
3. Remove the lower ball joint from the front wheel spindle using U-Joint Tool T74P-4635-C and Ball Joint Remover T94T-3010-AH or equivalent.
4. Turn the forcing screw clockwise until the ball joint is removed from the front wheel spindle.

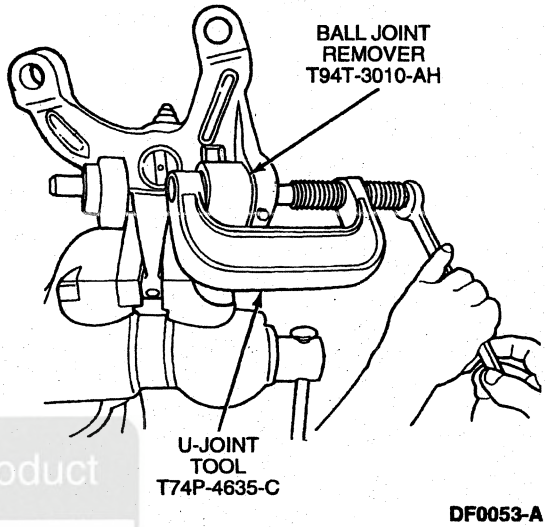

DF0053-A

5. **CAUTION: Do not heat the ball joint or the front wheel spindle to aid in removal.**

   Assemble U-joint tool and Receiver Cup D81T-3010-A4 or equivalent on the upper ball joint, and turn forcing screw clockwise until ball joint is removed from the front wheel spindle.

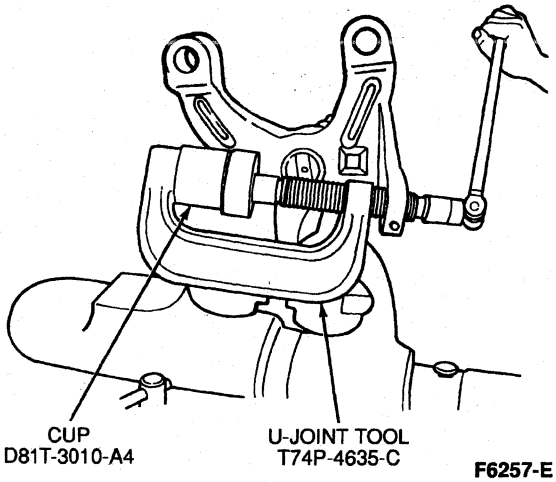

F6257-E

Licensed Product

REMOVAL AND INSTALLATION (Continued)

Installation

1. **CAUTION: Do not heat the ball joint or axle to aid in installation.**

   NOTE: Upper ball joint must be installed into the front wheel spindle first.

   NOTE: Individual ball joint tools are included in Ball Joint Adapter Set D81T-3010-A or equivalent.

   To install the upper ball joint, assemble C-frame assembly, Ball Joint Receiver Cup D81T-3010-A5 and adapters D81T-3010-A1 and D81T-3010-A3 or equivalents inside cup D81T-3010-A4 or equivalent in position on the front wheel spindle.

2. Turn forcing screw clockwise until ball joint is seated.

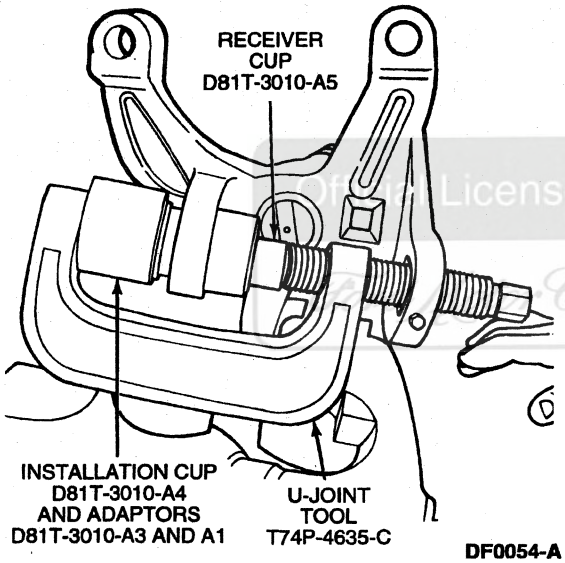

DF0054-A

3. To install the lower ball joint, assemble the C-frame in position on the front wheel spindle and repeat Step 1.

4. Install the snap ring onto the ball joint.

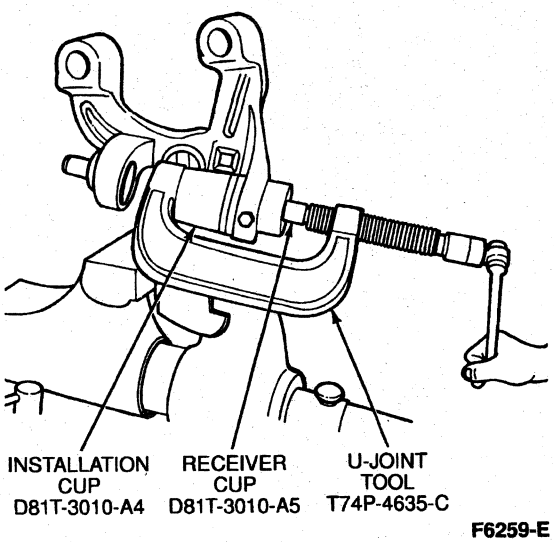

F6259-E

5. Install the front wheel spindle and ball joint assembly.

Bushing, Spindle, F-Super Duty

SPECIAL SERVICE TOOL(S) REQUIRED

Description	Tool Number
Bushing Replacer	T88T-3110-AH
Driver Handle	T80T-4000-W
Kingpin Reamer	T88T-3110-BH

Removal and Installation

1. NOTE: The bronze spindle bushings have an inside diameter of 33 mm (1.301 inch).

   Remove the front wheel spindle (3105).

REMOVAL AND INSTALLATION (Continued)

Spindle Bushing, Cutaway View

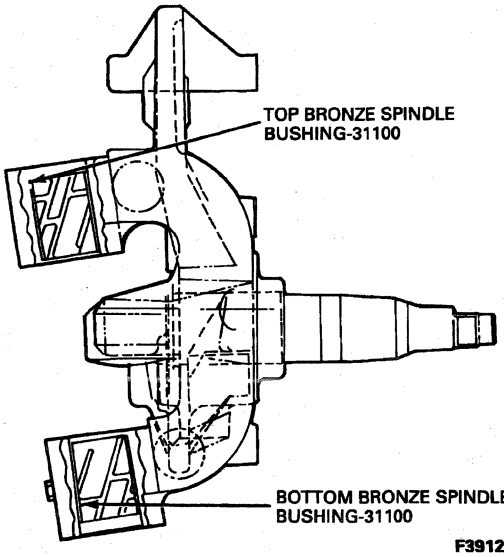

Spindle Bushing Removal/Installation Tools

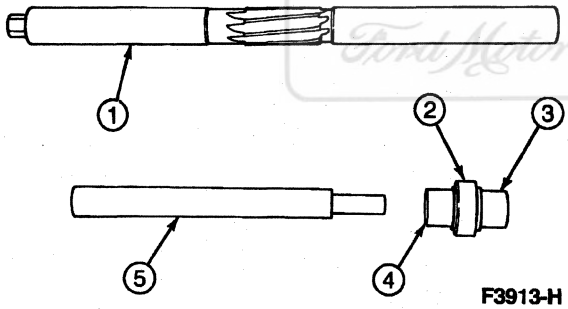

Item	Part Number	Description
1	T88T-3110-BH	Kingpin Reamer
2	T88T-3110-AH	Bushing Replacer
3	—	T Stamping (Use for Top Bushing Installation)
4	—	B Stamping (Use for Bottom Bushing Installation)
5	T80T-4000-W	Driver Handle

2. Remove and discard the seal from the bottom of the upper bushing bore of the upper spindle yoke.

3. Remove and install the top spindle bushing as follows:
   a. NOTE: Each side of the Bushing Replacer Driver is marked with a T or a B. Use the side with the T stamping to install the top spindle bushing. Use the side with the B stamping to install the bottom spindle bushing.

      NOTE: The bushing must be installed on the tool so the open end grooves will face outward when installed.

      Install the driver handle through the bottom bore. Position a new bushing on the T side stamping of the bushing replacer.
   b. Position the new bushing and driver over the old bushing. Insert the handle into the driver and drive the old bushing out while the new bushing is driven in. Drive until the tool is seated.
   c. Bushing will then be seated at the proper depth (2.03 mm [0.080 inch] minimum from bottom of upper spindle boss).

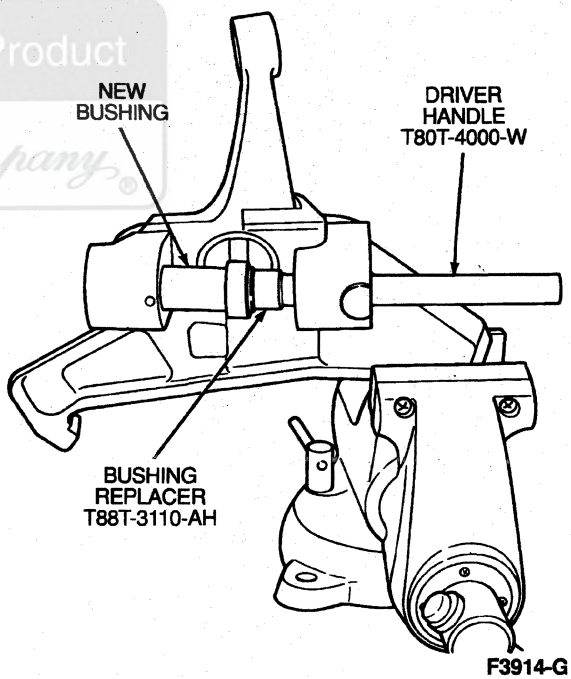

Official Licensed Product
Ford Motor Company

REMOVAL AND INSTALLATION (Continued)

d. NOTE: The bushing must be installed on the tool so the open-end grooves will face outward when installed.

Remove and install the bottom spindle bushing. Install the driver handle through the top bushing bore. Position a new bushing on the B side stamping of the bushing replacer.

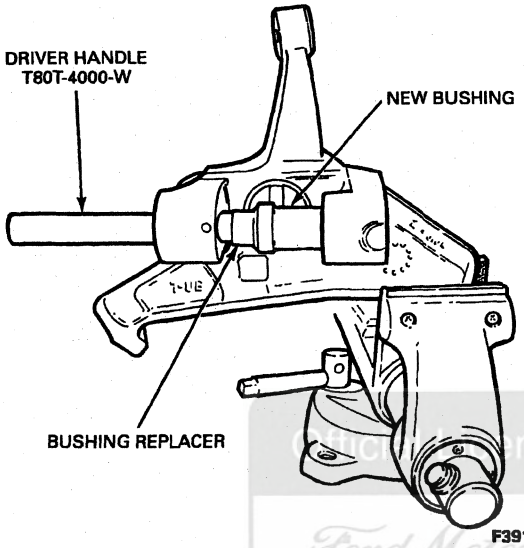

e. Position the new bushing and driver over the old bushing in the bottom spindle bore. Insert the handle into the driver and drive the old bushing out while the new bushing is driven in. Drive until the tool is seated.

The bottom bushing will then be seated at the proper depth (3.30 mm [0.130 inch] minimum from the top of the lower spindle boss).

4. Ream the new bushings to 0.025-0.076 mm (0.001-0.003 inch) larger than the diameter of a new spindle pin. Ream the top bushing first with the reamer tool.

a. Install the smaller diameter of the tool through the top bore and into the bottom bore until the reaming threads are in position in the top bushing.

b. NOTE: The larger diameter portion of the tool will act as a pilot in the top bushing to properly ream the bottom bushing.

Turn the tool until the threads exit the top bushing. Ream the bottom bushing.

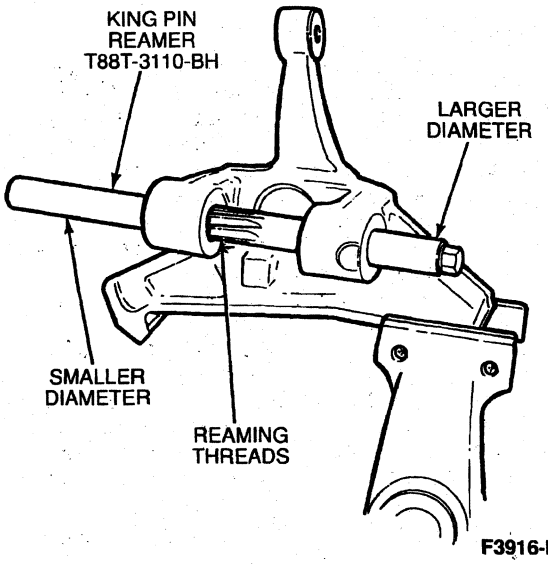

c. Clean all the metal shavings from the bronze bushings after reaming. Coat the bushings and spindle pin with Premium Long-Life Grease XG-1-C or -K or equivalent meeting Ford specification ESA-M1C75-B.

5. Install a new seal on bushing replacer on the side with the T stamping. Install the handle into the driver and push the seal into position in the bottom of the top bushing bore.

6. Remove the front wheel spindle from the vise and install.

Ford Motor Company

Camber Adjuster, F-250 Heavy Duty and F-350 with Ball Joints

Removal

1. Raise the vehicle and remove the wheel and tire.
2. Remove the upper ball joint camber adjuster clamp bolt and nut. Remove the clamp from axle.
3. Remove the camber adjuster from the axle. Using Ball Joint Removing Tool D81T-3010-B or equivalent, wedge the adjuster out of the axle.

Installation

1. Install the correct camber adjuster into the axle, aligning the slot in the adjuster.
2. Install the adjuster on the upper ball joint stud and tap the adjuster into the axle.
3. Install the clamp bolt and nut in the axle. Tighten the nut to 68-92 N·m (50-68 lb-ft).
4. Install the wheel and tire. Lower the vehicle.

REMOVAL AND INSTALLATION (Continued)

Radius Arm

Removal

1. **CAUTION: The axle must be supported on the jack throughout spring removal and installation, and must not hang by the front brake hose (2078). If the length of the front brake hose is not sufficient to provide adequate clearance for removal and installation of the front coil spring (5310), the disc brake caliper (2B120) must be removed from the front wheel spindle (3105) according to the procedures specified in Section 06-03. After removal, the disc brake caliper must be placed on the frame (5005) or otherwise supported to prevent suspending the disc brake caliper from the front brake hose. These precautions are absolutely necessary to prevent serious damage to the tube portion of the caliper hose assembly.**

   Raise the front of the vehicle, and place safety stands under the frame. Place a jack under the axle.

2. Remove front tires.
3. Disconnect front stabilizer bar (5482) at the front stabilizer bar link (5K483), if so equipped.

Official Licensed Product
Ford Motor Company

REMOVAL AND INSTALLATION (Continued)

Radius Arm Assembly

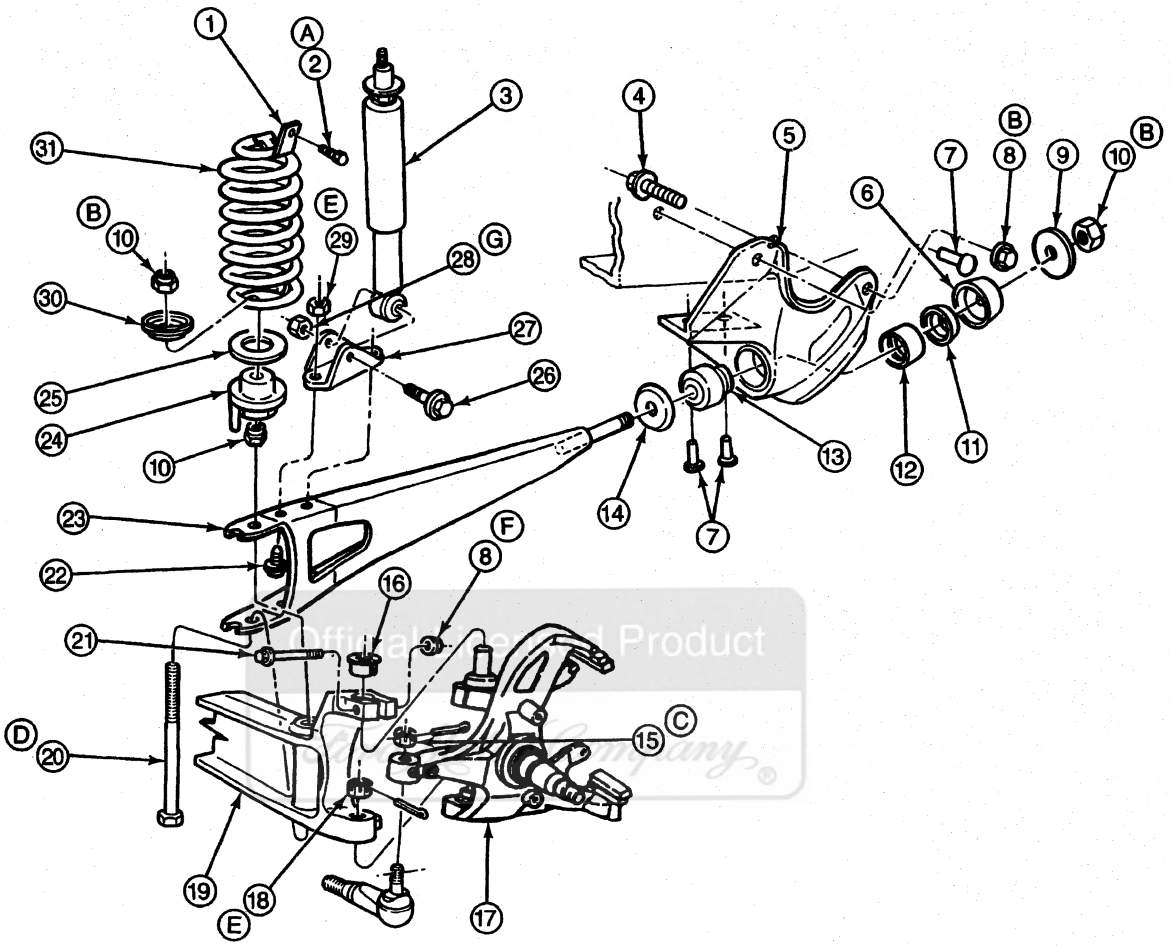

DF0055-A

Item	Part Number	Description
1	5A333	Retainer
2	40949	Bolt
3	18124	Front Shock Absorber
4	N802210	Bolt
5	3B095	Radius Arm Bracket
6	3B463	Heat Shield (RH)
7	647096	Rivet
8	800937	Nut
9	379572	Washer
10	34992	Nut
11	3A184	Outer Insulator
12	3B244	Spacer
13	3B203	Inner Insulator
14	3B186	Retainer
15	N800895	Nut

(Continued)

Item	Part Number	Description
16	3B404	Caster/Camber Adjuster
17	3105	Front Wheel Spindle
18	383489	Nut
19	3007	Front Axle (LH)
20	389574	Bolt
21	N606085-S2	Clamp Bolt
22	605290	Bolt
23	3A292	Radius Arm
24	5A316	Lower Spring Seat
25	5414	Front Spring Insulator
26	N805033	Bolt
27	18126	Lower Shock Bracket
28	806496	Nut
29	620482	Nut
30	5A349	Retainer

(Continued)

REMOVAL AND INSTALLATION (Continued)

Item	Part Number	Description
31	5310	Front Coil Spring
A	—	Tighten to 17-23 N·m (13-17 Lb-Ft)
B	—	Tighten to 113-153 N·m (83-112 Lb-Ft)
C	—	Tighten to 77-103 N·m (56-76 Lb-Ft)

(Continued)

Item	Part Number	Description
D	—	Tighten to 340-460 N·m (250-339 Lb-Ft)
E	—	Tighten to 34-46 N·m (25-33 Lb-Ft)
F	—	Tighten to 68-92 N·m (50-68 Lb-Ft)
G	—	Tighten to 60-80 N·m (44-59 Lb-Ft)

4. Disconnect the lower end of the front shock absorber (18124) from the front shock lower bracket bolt and nut or stud.
5. Remove the front coil spring.
6. Remove the front spring insulator (5414) and seat from the radius arm.
7. Remove radius arm-to-axle bolt and nut.
8. Remove the nut, rear washer, insulator and spacer from the rear side of the radius arm rear bracket.
9. Remove the radius arm from the vehicle.
10. Inspect inner insulator for heat deterioration. Replace with new insulator, if necessary.

Installation

1. Position the front end of the radius arm to the axle. Install the attaching bolt from underneath through the radius arm and axle, and then install the nut finger-tight.
2. Install the retainer and inner insulator on the radius arm stud. Insert the stud through the rear bracket.
3. Install the spacer, insulator, rear washer and nut on the arm stud at the rear side of the arm bracket. Tighten the nut to 113-153 N·m (83-112 lb-ft).
4. Tighten the radius arm-to-axle bolt nut to 340-460 N·m (250-339 lb-ft).
5. Install the spring lower seat and front spring insulator on the radius arm so the hole in the seat goes over the arm-to-axle bolt.
6. Install the front coil spring.
7. Connect the lower end of the front shock absorber to the lower bracket on the radius arm with the retaining bolt and nut. The bolt head must be installed toward tire. Tighten the nut to 60-80 N·m (44-59 lb-ft).
8. Reinstall front stabilizer bar to front stabilizer bar link. Tighten nut to 77-103 N·m (57-75 lb-ft).
9. Install disc brake caliper if removed. Refer to Section 06-03.
10. Install front tires. Refer to Section 04-04.
11. Lower the vehicle.

Insulators, Radius Arm

Removal

1. Remove the lower shock absorber pivot bolt and compress the front shock absorber (18124).
2. Remove the nut and washer retaining the radius arm to the radius arm bracket. Remove the outer insulator and spacer.
3. Move the radius arm and axle assembly forward out of the radius arm bracket.
4. Remove the inner insulator and retainer.

Installation

1. Follow removal procedure in reverse order.
2. Tighten radius arm-to-radius arm bracket nut to 113-153 N·m (83-113 lb-ft). Tighten shock bolt to 60-80 N·m (44-59 lb-ft).

Axle, Front, F-Super Duty

Removal

1. Using a hoist, raise the vehicle by the frame (5005) until the weight is off the front springs. Where a frame hoist is unavailable, use a suitable floor jack to jack up the vehicle by the frame. Raise the vehicle high enough to get the weight off the springs.
2. Remove the wheel and tire assemblies.
3. Remove the disc brake calipers (2B120) and wire out of the way. Refer to Section 06-03.
4. On F-Super Duty Motorhome Chassis vehicles, remove the shock absorber lower mounting bolt.
5. Install the wheel and tire assemblies with three or four lug nuts (1012) finger-tight.
6. Remove the nuts that hold the front stabilizer bar link (5K483) to the front stabilizer bar (5482).
7. Remove the washers and stabilizer bar mounting bracket insulators and disconnect the front stabilizer bar links from the front stabilizer bar.

Official Licensed Product Ford Motor Company

REMOVAL AND INSTALLATION (Continued)

8. On F-Super Duty Motorhome Chassis vehicles, disconnect the steering sector shaft arm drag link (3304) from the steering arm on the front wheel spindle (3105) using Tie Rod End Remover TOOL-3290-D or equivalent. Wire the steering sector shaft arm drag link to the frame. On F-Super Duty Chassis Cab vehicles, remove the steering sector shaft arm drag link from the tie rod.
9. On Chassis Cab vehicles, remove the tracking bar-to-axle nut and bolt. Disconnect the bar from the axle mounting bracket.
10. Remove the nuts from the U-bolts that hold the springs to the axle.
11. Remove the U-bolts and stabilizer bar brackets (5486) or jack brackets.
12. Raise the vehicle and roll the axle out from under the vehicle.

Installation

1. Position the axle so the spring seats on the I-beam link with the locating boss on the spring.
2. Install the U-bolts and the jack brackets or stabilizer bar brackets. Tighten the U-bolt nuts to 213-287 N·m (157-211 lb-ft).
3. Connect the front stabilizer bar link to the steering arm on the front wheel spindle. Install the castle nuts and tighten to 75-105 N·m (55-77 lb-ft).
4. On F-Super Duty Motorhome Chassis vehicles, connect the steering sector shaft arm drag link to the steering arm on the front wheel spindle. On F-Super Duty Chassis Cab vehicles, connect the steering sector shaft arm drag link to the tie rod.
5. On Chassis Cab vehicles, position the tracking bar to the axle. Install the nut and bolt and tighten to 163-203 N·m (120-150 lb-ft).
6. Position the ends of the front stabilizer bar links onto the front stabilizer bar. Install the stabilizer bar mounting bracket insulators, washers and nuts. Tighten to 24-31 N·m (18-23 lb-ft).
7. Install the disc brake calipers. Refer to Section 06-03.
8. Install the lower shock absorber mounting bolt, washers and nut. Tighten to 300-407 N·m (221-300 lb-ft).
9. Install the wheel and tire assemblies and tighten to specification listed at the end of this section.

Axle, I-Beam, Front

Removal

1. Remove the front wheel spindle (3105), the front spring, and the front stabilizer bar (5482) (if so equipped).
2. Remove the spring lower seat from the radius arm, and then remove the bolt and nut that attach the radius arm to the front I-beam axle.
3. Remove the axle-to-frame pivot bracket bolt and nut.

Installation

1. Position the axle-to-frame pivot bracket. Install the bolt and nut finger-tight.
2. Position the opposite end of the axle to the radius arm. Install the attaching bolt from underneath through the bracket, radius arm and axle.
3. Install the spring lower seat and front spring insulator (5414) on the radius arm so hole in the seat indexes over the arm-to-axle bolt and the pin on the spring seat engages the slot in the radius arm.
4. Install the front spring.
5. Install the front wheel spindle.
6. If so equipped, install front stabilizer bar.
7. Lower the vehicle. With the weight on the suspension, tighten the axle-to-frame pivot bolt to 163-203 N·m (120-150 lb-ft).

Axle Pivot Bracket, F-250 Heavy Duty and F-350

Removal

1. Remove the front spring.
2. Remove the axle pivot nut and bolt. Pull the pivot end of the axle down and out of the bracket.
3. Remove the four retaining nuts and bolts, and remove the axle pivot bracket.

Installation

1. NOTE: The two rearward vertical bolts must be installed with the bolt heads next to the engine oil pan to maintain the required clearance. The bolt and retainer assembly must be installed with the bolt heads on the inside surface of the pivot bracket.

   Position the axle pivot bracket to the front crossmember (5019). Loosely install the bolts and retainer nuts. Do not tighten at this time.
2. To obtain correct positioning of the axle pivot brackets, tighten the two forward (horizontal) fasteners to 88-118 N·m (65-87 lb-ft) first. Then, tighten the two rearward (vertical) bolts and nuts (at top of front crossmember) to 113-153 N·m (83-113 lb-ft).
3. Install the front spring.

Official Licensed Product Ford Motor Company

REMOVAL AND INSTALLATION (Continued)

Axle Pivot Bracket, F-250 Heavy Duty and F-350

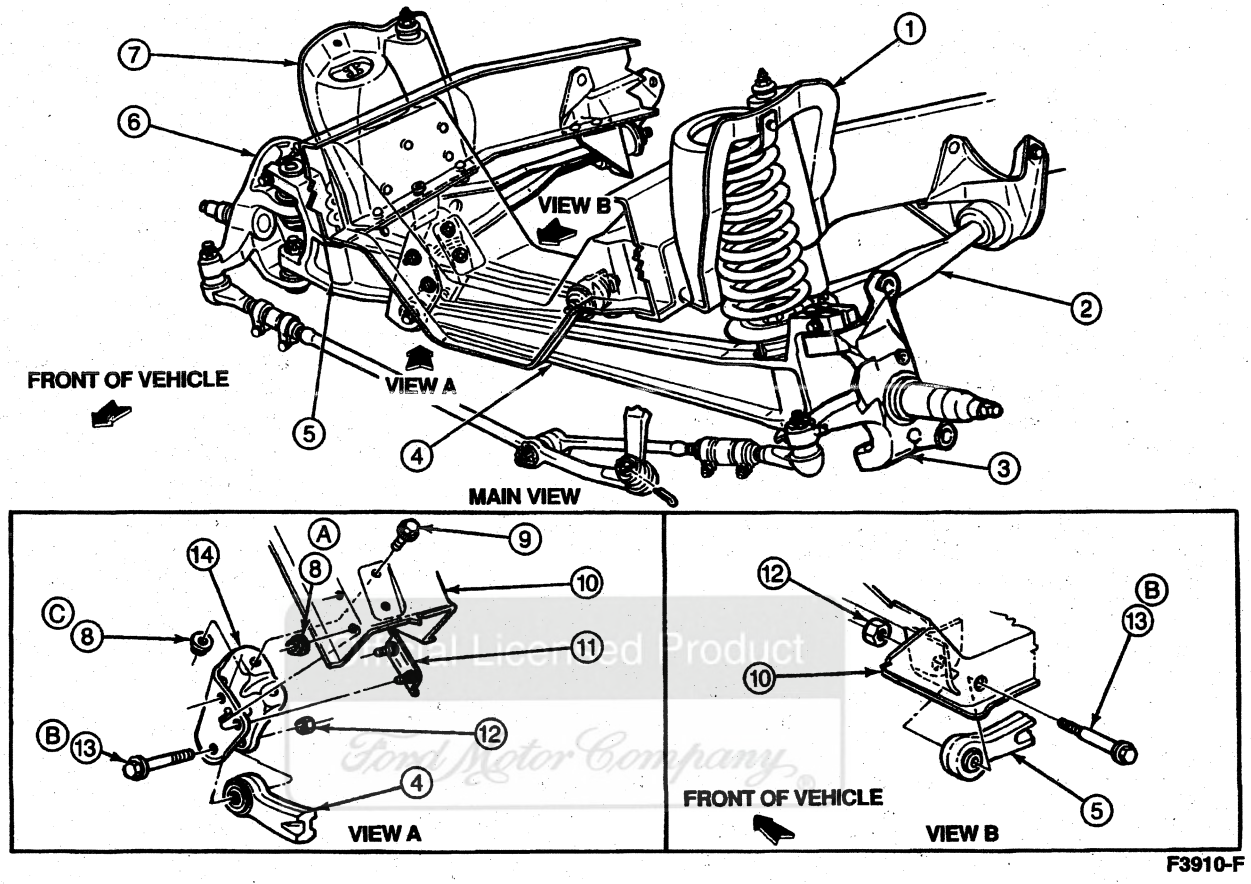

Item	Part Number	Description
1	5B315	Upper Spring Seat (LH)
2	3405	Radius Arm
3	3105	Front Wheel Spindle (LH)
4	3007	Front Axle (LH)
5	3006	Front Right Hand Axle
6	3105	Front Wheel Spindle (RH)
7	5A318	Upper Spring Seat (RH)
8	802073	Nut
9	802114	Bolt

(Continued)

Item	Part Number	Description
10	5019	Front Crossmember
11	N808242	Retainer Bolt
12	620604	Nut
13	801079	Bolt
14	3K090	Front Axle Pivot Bracket
A	—	Tighten to 113-153 N·m (83-113 Lb-Ft)
B	—	Tighten to 149-201 N·m (110-148 Lb-Ft)
C	—	Tighten to 88-118 N·m (65-87 Lb-Ft)

Axle Pivot Bushing

SPECIAL SERVICE TOOL(S) REQUIRED

Description	Tool Number
Suspension Bushing Service Set	T78P-5638-A
Front Suspension Bushing Tool	T80T-5638-A
Forcing Screw	T78P-5638-A1

(Continued)

SPECIAL SERVICE TOOL(S) REQUIRED (Cont'd)

Description	Tool Number
Bushing Remover	T80T-5638-A2
Receiver Cup	T78P-5638-A4
Receiver Cup	T78P-5638-A2
Bushing Replacer	T78P-5638-A3

REMOVAL AND INSTALLATION (Continued)

Removal

1. NOTE: Individual bushing tools are included in Suspension Bushing Service Set T78P-5638-A and Front Suspension Bushing Tool T80T-5638-A.

   Remove front coil spring (5310).
2. Remove the axle pivot nut and bolt.
3. Pull the pivot end of axle down until bushing is exposed.
4. Install Forcing Screw T78P-5638-A1, Bushing Remover T80T-5638-A2 and Receiver Cup T78P-5638-A4 onto pivot bushing.
5. Turn the forcing screw clockwise to remove the pivot bushing.

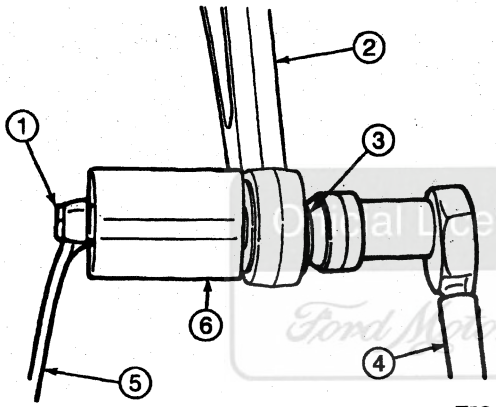

F3315-F

Item	Part Number	Description
1	T78P-5638-A1	Forcing Screw
2	3001	Axle
3	T80T-5638-A2	Pivot Bushing Remover
4	—	Wrench
5	—	Backup Wrench
6	T78P-5638-A2	Receiver Cup

Installation

1. Place pivot bushing in axle. Assemble Receiver Cup T78P-5638-A2, Forcing Screw T78P-5638-A1 and Bushing Replacer T78P-5638-A3 as shown in the following illustration.

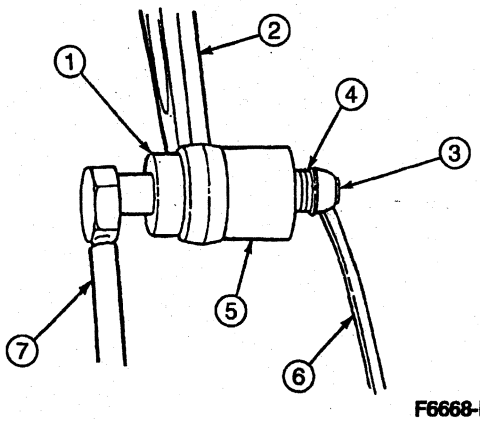

F6668-B

Item	Part Number	Description
1	T78P-5638-A3	Bushing Replacer
2	3001	Axle
3	T78P-5638-A1	Forcing Screw
4	—	Washers
5	T78P-5638-A2	Receiver Cup
6	—	Backup Wrench
7	—	Wrench

2. Add four to six washers between head of forcing screw and Bushing Replacer T78P-5638-A3.
3. NOTE: Bushing must be free of any grease or oil.

   Install bushing into axle, leaving 5.33-7.37 mm (0.210-0.290 inch) gap between the shoulder of the bushing outer metal and the face of the I-beam as shown in the illustration.
4. Position axle in pivot bracket and install axle pivot bolt through the bracket and axle. Install nut, but do not tighten at this time.
5. Install front coil spring. Make sure front coil spring is seated.
6. Lower vehicle and, with the weight on the suspension, tighten pivot bushing bolt and nut to 149-201 N·m (110-148 lb-ft).

Original Licensed Product
Ford Motor Company

REMOVAL AND INSTALLATION (Continued)

Axle Pivot Bushing Installed

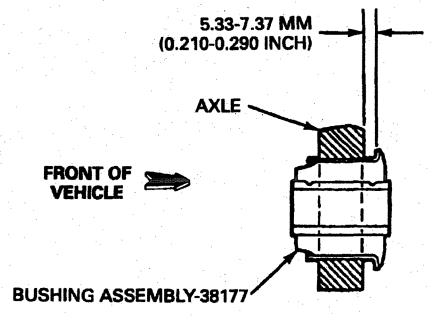

F6669-C

Track Bar, F-Super Duty Chassis Cab

Removal

1. Remove the bolt and nut attaching the track bar assembly to the track bar bracket.
2. Remove the bolt and nut attaching the track bar to the mounting bracket at the axle.
3. Remove the track bar.

Installation

1. Attach the track bar to the track bar bracket with a bolt and lock nut. Tighten the nut to 163-203 N·m (120-150 lb-ft).
2. Attach the track bar to the axle mounting bracket with the bolt and nut. Tighten the nut to 163-203 N·m (120-150 lb-ft).

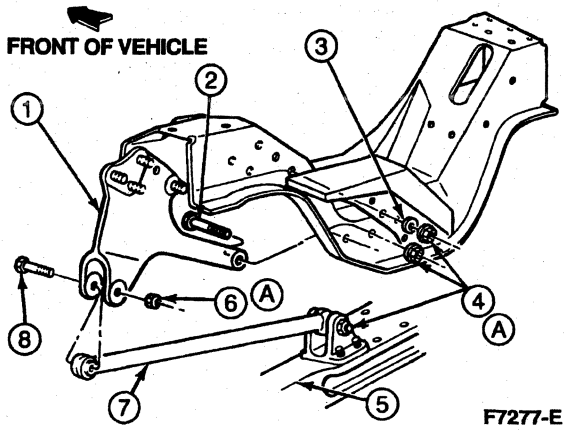

F7277-E

Item	Part Number	Description
1	3B241	Track Bar Bracket
2	N806158	Bolt

(Continued)

Item	Part Number	Description
3	N630090	Washer
4	N801670	Nut
5	3001	Front Axle Assembly
6	N620604	Nut
7	3B239	Track Bar
8	N803960	Bolt
A	—	Tighten to 163-203 N·m (120-150 Lb-Ft)

Stabilizer Bar, F-250 Heavy Duty and F-350

Removal

1. Disconnect the left and right ends of the front stabilizer bar (5482) from the front stabilizer bar link (5K483) attached to the spring seat.
2. Disconnect the retainer bolts. Remove the front stabilizer bar.
3. Disconnect the front stabilizer bar links by loosening the right and left lock nuts from their respective I-beam brackets.

Official Licensed Product Ford Motor Company

REMOVAL AND INSTALLATION (Continued)

Front Stabilizer Bar, F-250 Heavy Duty and F-350

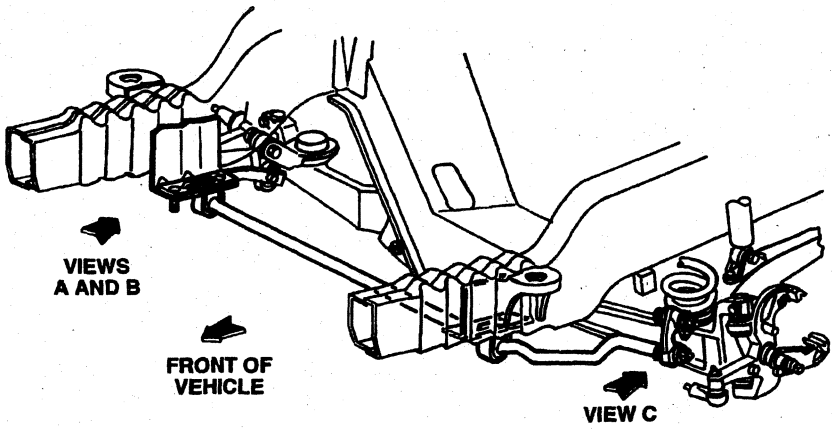

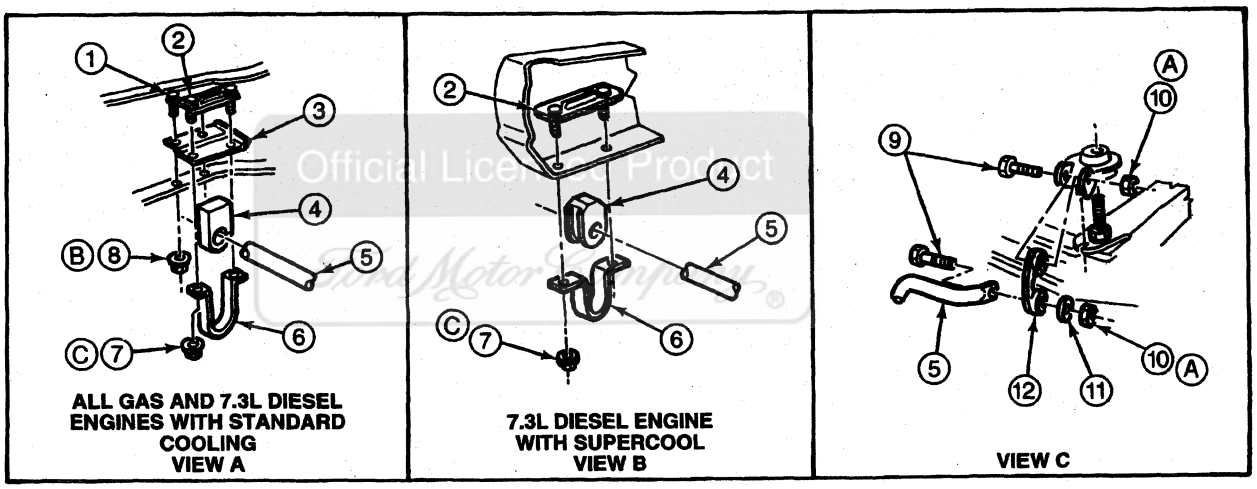

DF0056-A

Item	Part Number	Description
1	N605933-S2	Bolt, M12 x 1.75 Hex Flange
2	N806789-S2	Bolt and Retainer, M10-1.5 x 33.5 Hex Flange
3	5486	Stabilizer Bar Bracket
4	5484	Mounting Bracket Insulator Stabilizer Bar
5	5482	Front Stabilizer Bar
6	5486	Stabilizer Bar Bracket (Retainer)
7	N620482-S36	Nut, M12 x 1.75 Hex Flange
8	N620483-S2	Nut, M12 x 1.75 Hex Flange

(Continued)

Item	Part Number	Description
9	N605704-S2	Bolt, M12-1.75 x 65 Hex-Head
10	N620469-S2	Nut, M12 x 1.75
11	N801527-S2	Washer, 13 x 34 x 2.5 Flat Hard
12	5K483	Front Stabilizer Bar Link
A	—	Tighten to 77-103 N·m (57-75 Lb-Ft)
B	—	Tighten to 53-72 N·m (39-53 Lb-Ft)
C	—	Tighten to 34-46 N·m (25-34 Lb-Ft)

REMOVAL AND INSTALLATION (Continued)

Installation

1. Loosely assemble the entire front stabilizer bar with both front stabilizer bar links outboard of the front stabilizer bar.
2. Force the front stabilizer bar rearward to connect the bar ends to the front stabilizer bar links.
3. Tighten the nuts and bolts retaining the front stabilizer bar links to the front stabilizer bar and spring seat to 77-103 N·m (57-75 lb-ft).
4. Make sure insulators are seated in retainers and the front stabilizer bar is centered in the assembly.
5. Tighten the front stabilizer bar-to-frame retainer nuts and bolts to 34-46 N·m (25-34 lb-ft).

Stabilizer Bar, F-Super Duty Chassis Cab

Removal

1. Disconnect the left and right ends of the front stabilizer bar (5482) from the front stabilizer bar link (5K483) attached to the frame side rail mounting brackets.
2. Disconnect the retainer bolt and remove the front stabilizer bar from front axle.
3. Disconnect the front stabilizer bar links by removing from the frame side rail mounting brackets.

Official Licensed Product
Ford Motor Company

Front Stabilizer Bar, F-Super Duty Chassis Cab

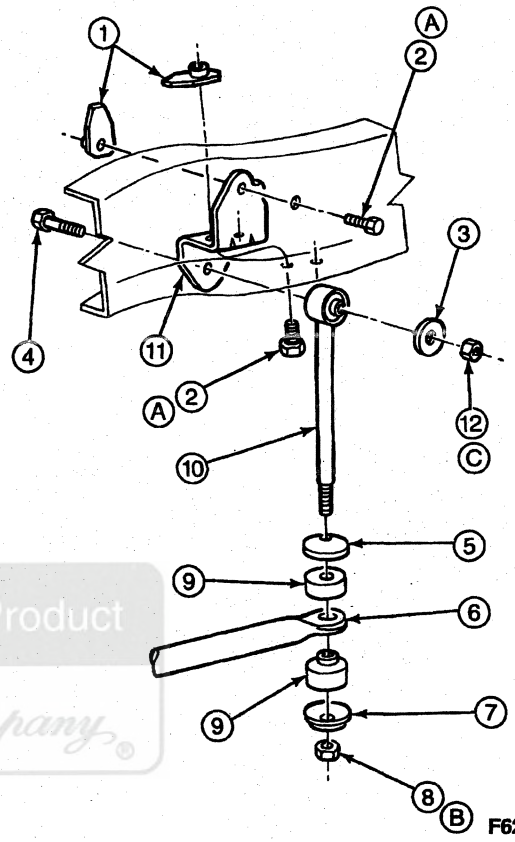

F6261-F

Item	Part Number	Description
1	802158	Stamped Nut
2	605546	Bolt
3	801527	Washer
4	605704	Bolt
5	18171	Washer (Upper)
6	5482	Front Stabilizer Bar
7	18041	Washer (Lower)
8	384485	Nut
9	5493	Lower Suspension Arm Stabilizer Bar Insulator
10	5K483	Front Stabilizer Bar Link
11	5486	Stabilizer Bar Bracket
12	620469	Nut
A	—	Tighten to 47-63 N·m (35-46 Lb-Ft)
B	—	Tighten to 21-33 N·m (15-24 Lb-Ft)
C	—	Tighten to 70-100 N·m (52-74 Lb-Ft)

REMOVAL AND INSTALLATION (Continued)

Installation

1. Loosely assemble the entire front stabilizer bar system:
   a. Both front stabilizer bar links loosely attached to the frame mounting brackets and,
   b. Front stabilizer bar in position on the axle.
2. Make sure the stabilizer bar mounting bracket insulators are seated in the retainers and the front stabilizer bar is centered between the front leaf springs.
3. Attach the front stabilizer bar to the axle by assembling the retainers to the axle mounting brackets. Tighten the retainer nuts to 48-68 N·m (35-50 lb-ft).
4. Install the front stabilizer bar links to the frame mounting brackets using the bolts, washers and lock nuts. Tighten the lock nut to 70-100 N·m (52-74 lb-ft).
5. Install the front stabilizer bar link to front stabilizer bar with two cup washers, two stabilizer bar mounting bracket insulators and one lock nut. Tighten the lock nut to 21-33 N·m (15-24 lb-ft).

Stabilizer Bar, F-Super Duty Motorhome Chassis

Removal

1. Disconnect the left and right ends of the front stabilizer bar (5482) from the front stabilizer bar link (5K483) attached to the front axle.
2. Remove front stabilizer bar-to-frame nuts and bolts. Remove the front stabilizer bar.
3. Disconnect the front stabilizer bar links by removing them from the axle mounting brackets.

Installation

1. Loosely assemble the entire front stabilizer bar system with both front stabilizer bar links loosely attached to the axle mounting brackets, and the front stabilizer bar in position on the frame (5005).
2. Make sure the stabilizer bar mounting bracket insulators are seated in the retainers and the front stabilizer bar is centered on the frame.
3. Attach the front stabilizer bar to the frame by assembling the retainers to the frame mounts. Tighten the bolts to 40-64 N·m (30-47 lb-ft).
4. Install the front stabilizer bar links to the axle mounting brackets using the bolts, washers and lock nuts. Tighten to 77-110 N·m (57-81 lb-ft).
5. Install the front stabilizer bar links to the front stabilizer bar with two cup washers, two front stabilizer bar links and one lock nut per side. Tighten the lock nut to 21-33 N·m (15-24 lb-ft).

Front Stabilizer Bar, F-Super Duty Motorhome Chassis

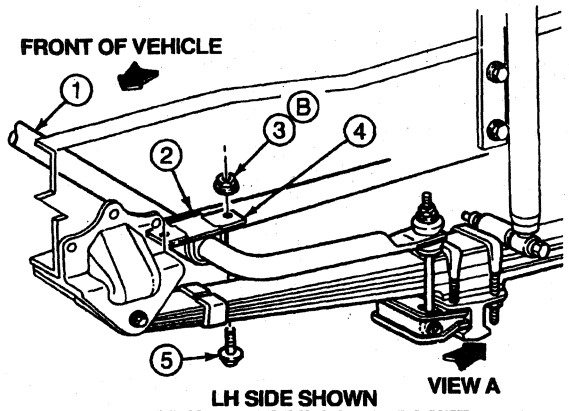

LH SIDE SHOWN
RH SIDE SYMMETRICAL OPPOSITE

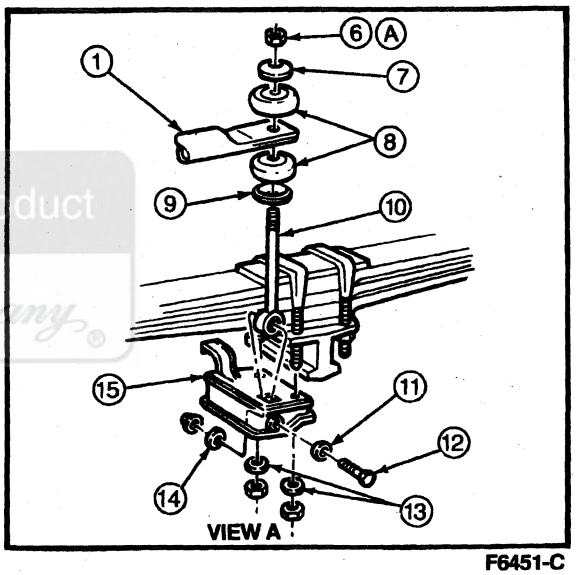

F6451-C

Item	Part Number	Description
1	5482	Front Stabilizer Bar
2	5484	Stabilizer Bar Mounting Bracket Insulator
3	—	Nut
4	5488	Clamp
5	605920	Bolt
6	384485-S2	Nut
7	18041	Washer
8	5493	Lower Suspension Arm Stabilizer Bar Insulator
9	18171	Rear Shock Absorber Upper Lock Washer
10	5K483	Front Stabilizer Bar Link
11	801527	Washer
12	605704	Bolt

(Continued)

Official Licensed Product
Ford Motor Company

REMOVAL AND INSTALLATION (Continued)

Item	Part Number	Description
13	44882	Washer
14	803447	Washer
15	5486	Stabilizer Bar Bracket (LH)
A	—	Tighten to 21-33 N·m (15-24 Lb-Ft)
B	—	Tighten to 40-64 N·m (30-47 Lb-Ft)

Bushing

SPECIAL SERVICE TOOL(S) REQUIRED

Description	Tool Number
Suspension Bushing Service Set	T78P-5638-A
Suspension Bushing Service Set	T79P-5638-A
Front Suspension Bushing Tool	T80T-5638-A
Forcing Screw	T78P-5638-A1
Receiver Cup	T78P-5638-A4
Bushing Remover	T80T-5638-A2
Receiver Cup	T79P-5638-A3
Receiver Cup	T78P-5638-A2

Removal

1. NOTE: Individual bushing tools are included in Suspension Bushing Service Set T78P-5638-A, Suspension Bushing Service Set T79P-5638-A and Front Suspension Bushing Tool T80T-5638-A.

   Raise vehicle on hoist and position suitable safety stands under vehicle.
2. Remove front stabilizer bar.
3. Install Forcing Screw T78P-5638-A1, Receiver Cup T78P-5638-A4 and Bushing Remover T80T-5638-A2 onto the front axle surrounding the front stabilizer bar bushing.
4. Turn the forcing screw clockwise to remove the bushing from the axle.

Installation

1. Assemble Forcing Screw T78P-5638-A1 and Receiver Cup T79P-5638-A3 through the bushing hole in the axle.
2. Slide the bushing over the forcing screw.
3. Install Receiver Cup T78P-5638-A2 or equivalent on the end of the forcing screw.
4. Turn the forcing screw clockwise to engage the bushing into the axle.
5. Install the front stabilizer bar.
6. Remove safety stands and lower the vehicle.

REMOVAL

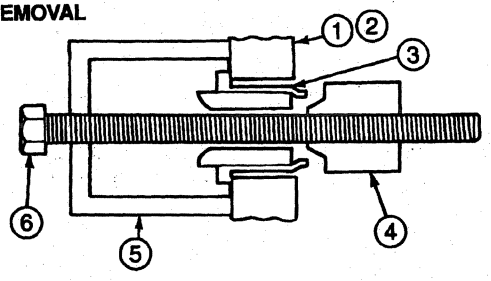

INSTALLATION

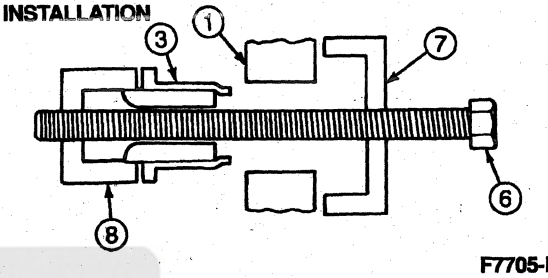

F7705-B

Item	Part Number	Description
1	3006	Axle Assy (RH)
2	3007	Axle Assy (LH)
3	5K486	Bushing, Front Stabilizer Bar
4	T80T-5638-A2	Bushing Remover
5	T78P-5638-A4	Receiver Cup
6	T78P-5638-A1	Forcing Screw
7	T79P-5638-A3	Receiver Cup
8	T78P-5638-A2	Receiver Cup

Bumper, Front, F-250 Heavy Duty and F-350

Removal

1. Remove hex-head bolt attaching front suspension bumper (3020) to frame (5005).
2. Remove front suspension bumper.

Installation

1. Place the front suspension bumper in position under the frame and spring upper seat. Position front suspension bumper in rearward set of holes on right side of the frame.

Official Licensed Product

REMOVAL AND INSTALLATION (Continued)

2. Install bolt or screw and tighten to 17-23 N·m (13-17 lb-ft).

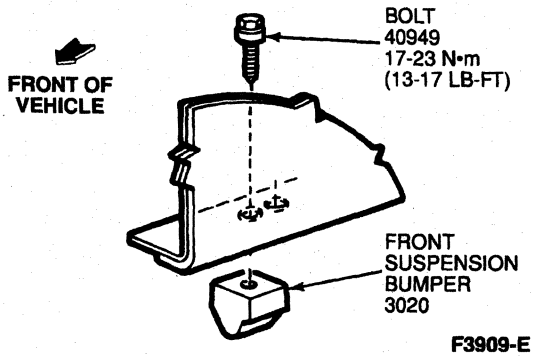

Bumper, Front, F-Super Duty Chassis Cab

Removal

1. Raise vehicle on a hoist and position suitable safety stands under vehicle.
2. Remove the retaining nut and remove the front suspension bumper (3020) from the bracket.

Installation

1. Position the front suspension bumper and install the retaining nut. Tighten nut to 30-40 N·m (22-30 lb-ft).
2. Remove safety stands and lower vehicle.

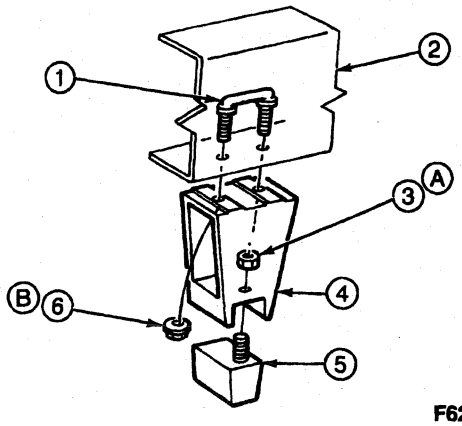

Item	Part Number	Description
1	805008	U-Bolt
2	5005	Frame

(Continued)

Item	Part Number	Description
3	620468	Nut
4	3B251	Bumper Mounting Bracket
5	3020	Front Suspension Bumper
6	620483	Nut
A	—	Tighten to 30-40 N·m (22-30 Lb-Ft)
B	—	Tighten to 30-40 N·m (22-30 Lb-Ft)

Bumper, Front, F-Super Duty Motorhome Chassis

Removal

1. Remove retaining nut and remove front suspension bumper from the frame (5005) or bracket.

Installation

1. Install the replacement front suspension bumper and retaining nut. Tighten nut to 40-64 N·m (30-47 lb-ft).

Official Licensed Product Ford Motor Company

REMOVAL AND INSTALLATION (Continued)

Front Suspension Bumper, F-Super Duty Motorhome Chassis

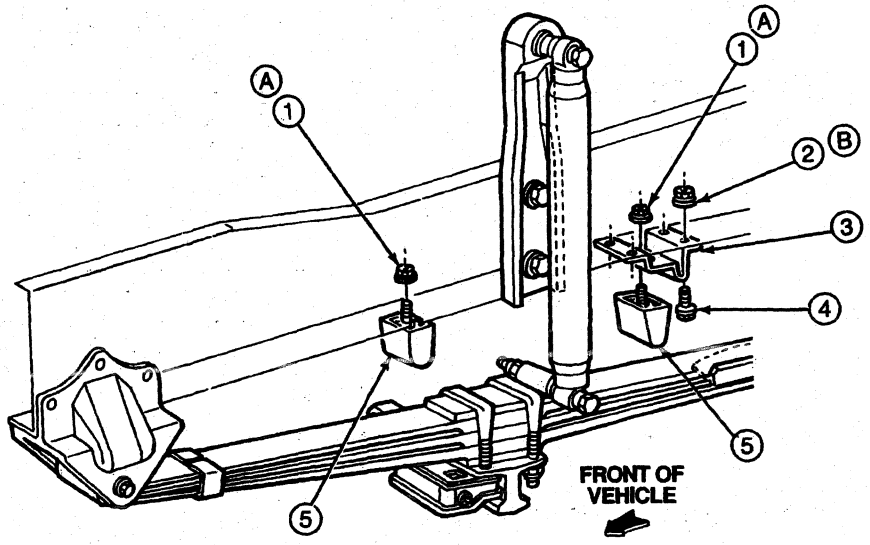

F7701-D

Item	Part Number	Description
1	N620482-S2	Hex Nut, M10-1.5
2	N620483-S2	Hex Flange Nut, M12-1.75
3	3B251	Front Suspension Bumper Bracket
4	N605933-S2	Hex Flange Bolt, M12-1.75x35
5	3020	Front Suspension Bumper
A	—	Tighten to 40-64 N·m (30-47 Lb-Ft)
B	—	Tighten to 77-110 N·m (57-81 Lb-Ft)

(Continued)

ADJUSTMENTS

Wheel Bearings

1. Raise the vehicle until the tire clears the floor and install safety stands.
2. Grasp the tire at the sides. Alternately push inward and pull outward on the tire. If any looseness is felt, adjust the wheel bearings as follows.
3. Remove the wheel cover if so equipped. Remove the grease cap from the hub using suitable tool.
4. Wipe the excess grease from the end of the front wheel spindle (3105). Remove the cotter pin and lock nut.
5. NOTE: Do not pry on the phenolic piston of the disc brake caliper (2B120).

   Loosen the adjusting nut three turns. Attempt to obtain running clearance between the rotor brake surface and the linings by rocking the wheel, hub and rotor assembly in and out several times to push the linings away from the rotor, or by light tapping on the housing of the disc brake caliper or some other means that does not damage the rotor lining surfaces.
6. If running clearance cannot be maintained throughout bearing adjustment in Steps 8 and 9, the disc brake caliper must be removed. Refer to Section 06-03.
7. Tighten the wheel bearing adjusting nut to 23-34 N·m (17-25 lb-ft) while rotating the disc brake rotor in the opposite direction.
8. Back the nut off approximately one-half turn.
9. Tighten the nut to 2.03-2.26 N·m (18-20 lb-in). End play should be 0.000-0.127 mm (0.000-0.005 inch). Torque required to rotate the hub should be 1.13-2.82 N·m (10-25 lb-in).
10. Install the retainer and new cotter pin, bending both ends of cotter pin in opposite direction around retainer. Install grease cap.
11. Install the disc brake caliper if removed.
12. Install the wheel and tire assembly if removed.
13. Lower the vehicle and tighten the lug nuts (1012) to 190 N·m (140 lb-ft).
14. Install the wheel cover, if so equipped.

ADJUSTMENTS (Continued)

15. Before driving the vehicle, pump the brake pedal (2455) several times to restore normal braking action.

SPECIFICATIONS

LUBRICANT/ADHESIVE/CLEANER SPECIFICATIONS

Description	Part Number	Ford Specification
Premium Long-Life Grease	XG-1-C or -K	ESA-M1C75-B

TORQUE SPECIFICATIONS, F-SUPER DUTY CHASSIS CAB

Description	N·m	Lb-Ft
Drag Link to Pitman Arm Nut	60-80	44-59
Steering Linkage to Spindle Nut	60-80	44-59
Spring Shackle to Frame Nut	170-230	125-170
Spring to Spring Shackle Nut	163-203	120-150
Axle to Spring U-Bolt Nut	213-287	157-211
Tracking Bar Retaining Nuts and Bolts	163-203	120-150
Tracking Bar Mounting Bracket Nuts and Bolts and Brace to Crossmember	163-203	120-150
Front Suspension Bumper Bracket U-Bolt Nuts	77-103	57-76
Front Suspension Mounting Bolt	17-23	13-17
Front Suspension Bumper Mounting Nuts	30-40	22-30
Spring to Rear Hanger Bracket	203-285	150-210
Stabilizer Link Mounting Bracket Nut	70-100	52-74
Stabilizer Link to Stabilizer Bar Nut	21-33	15-24
Upper Shock Bracket Nuts	60-80	44-59
Upper and Lower Shock to Bracket Nuts	53-72	39-53
Linkage Adjusting Clamp Nut	81-122	60-90
Drag Link to Tie Rod	60-80	44-59
Spindle Pin Plug	48-67	35-49
Stabilizer Bar Bracket-to-Frame Bolt	47-63	35-46

TORQUE SPECIFICATIONS, F-SUPER DUTY AND MOTORHOME CHASSIS VEHICLES

Description	N·m	Lb-Ft
Shock Absorber to Upper Shock Mount	300-407	221-300
Shock Absorber Upper Mount to Frame	300-407	220-300
Shock Absorber to Lower Mount	300-407	220-300
Leaf Spring U-Bolt Nuts	300-407	220-300
Front Suspension Bumpers to Frame or Bracket	40-64	30-47
Leaf Spring Front Shackle Through-Bolt	200-280	148-207
Leaf Spring Rear Shackle Through-Bolt	100-150	74-111

(Continued)

TORQUE SPECIFICATIONS, F-SUPER DUTY AND MOTORHOME CHASSIS VEHICLES (Cont'd)

Description	N·m	Lb-Ft
Steering Arm to Tie Rod, Castellated Nut	75-105	55-77
Steering Stop Bolt Lock Nut	50-70	37-52
Steering Drag Link to Steering Arm Castellated Nut	77-103	57-75
Steering Arm, Castellated Nut	75-105	55-77
Spindle Pin Lock Bolt, Nut	50-70	37-52
Stabilizer Bar Clamp to Frame	25-34	18-25
Stabilizer Link Through-Bolt	77-110	57-81
Stabilizer Link to Stabilizer Bar Nut	21-33	15-24
Stabilizer Bar Clamp to Frame	68-92	50-68

TORQUE SPECIFICATIONS, F-250 HEAVY DUTY AND F-350

Description	N·m	Lb-Ft
Axle to Pivot Bracket Nut and Bolt	149-201	110-148
Axle-to-Radius Arm Nut and Bolt	255-345	188-254
Axle-to-Upper Ball Joint Pinch Bolt Nut	68-92	50-68
Axle Pivot Bracket (Left) to Upper Frame Bolt	88-118	65-87
Axle Pivot Bracket (Left) Side Retainer to Frame Nut	113-153	84-112
Ball Joint (Lower) to Axle Nut	112-152	83-112
Coil Spring to Lower Retainer Nut	112-152	83-112
Coil Spring Upper Retainer to Spring Seat Nut and Bolt	17-23	13-17
Front Suspension Bumper to Frame Bolt	30-40	22-30
Radius Arm to Rear Bracket Nut	113-153	83-112
Radius Arm Rear Bracket to Frame Bolt	104-149	77-110
Shock Absorber to Lower Bracket Nut and Bolt	60-80	44-59
Shock Absorber to Upper Spring Seat Nut	34-48	25-35
Shock Absorber Bracket to Radius Arm Nut and Bolt	52-58	23-42
Shock Absorber Bracket to Frame	68-92	50-68
Stabilizer Bar Link to Bracket	71-100	52-74
Stabilizer Bar Link to Stabilizer Bar	72-108	53-80
Stabilizer Bar Retainer to Frame Crossmember Mounting Bracket	34-46	25-34
Steering Linkage to Spindle Nut	77-103	57-75

SPECIFICATIONS (Continued)

WHEEL TORQUE SPECIFICATIONS

Description	N·m	Lb-Ft
F-250, F-350 8-Lug Wheel 9/16-18	190	140
F-Super Duty and F-Super Duty Stripped Chassis Vehicles 10-Lug Wheel 9/16-18	190	140

SPECIAL SERVICE TOOLS/EQUIPMENT

SPECIAL SERVICE TOOLS REQUIRED

Tool Number/ Description	Illustration
T73T-1190-B Seal Replacer	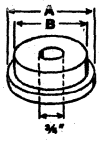 T73T-1190-B
T73T-1202-A Bearing Cup Replacer	T73T-1202-A
T73T-4222-A Bearing Cup Replacer	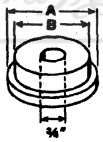 T73T-4222-A
T73T-4222-B Bearing Cup Replacer	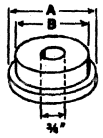 T73T-4222-B
T74P-4635-C U-Joint Tool	T74P-4635-C
T78P-5638-A Suspension Bushing Service Set	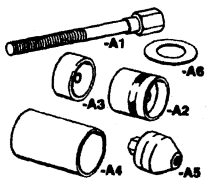 T78P-5638-A

(Continued)

SPECIAL SERVICE TOOLS REQUIRED (Cont'd)

Tool Number/ Description	Illustration
T79P-5638-A Suspension Bushing Service Set	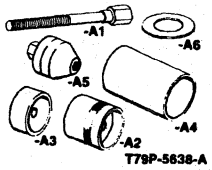 T79P-5638-A
T80T-4000-W Driver Handle	T80T-4000-W
T80T-5638-A Front Suspension Bushing Tool	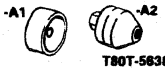 T80T-5638-A
T88T-3110-AH Bushing Replacer	T88T-3110-AH
T88T-3110-BH Kingpin Reamer	T88T-3110-BH
T94T-3010-AH Ball Joint Remover	T94T-3010-AH

SPECIAL SERVICE TOOLS DESIRED

Tool Number	Description
D81T-3010-A	Ball Joint Adapter Set
D81T-3010-B	Remover
TOOL-3290-D	Tie Rod End Remover

ROTUNDA EQUIPMENT

Model	Description
160-00045	Wheel Bearing Packer
164-R3600	Brake and Clutch Service Vacuum

Office Licensed Product Ford Motor Company

SECTION 04-01B Suspension, Front, 4-Wheel Drive

SUBJECT	PAGE
VEHICLE APPLICATION	04-01B-1
DESCRIPTION AND OPERATION	
Axle	04-01B-6
Component Replacement	04-01B-5
Components	04-01B-5
Fasteners, Suspension	04-01B-6
Hubs, Automatic Locking	04-01B-6
Hubs, Manual Locking	04-01B-6
Shock Absorber, Front	04-01B-6
Suspension, F-250 Heavy Duty with Dana Model 50 Front Drive Axle	04-01B-1
Suspension, F-350 with Dana Model 60 Monobeam Front Drive Axle	04-01B-3
Wheel Bearing and Wheel Hub	04-01B-6
DIAGNOSIS AND TESTING	
Suspension, Front	04-01B-6
REMOVAL AND INSTALLATION	
Axle Bearing Bracket, F-250 Heavy Duty	04-01B-9
Stabilizer Bar Link Assembly, F-250 Heavy Duty	04-01B-9
Stabilizer Bar Link Assembly, F-350	04-01B-11
Axle Pivot Bushing	04-01B-8
Axle, Front	04-01B-8
Ball Joint	04-01B-8
Bumper, Front	04-01B-12
Shock Absorber	04-01B-7
Spring, Leaf	04-01B-6
Wheel Hub Bolt	04-01B-7
Wheel Spindle	04-01B-7
SPECIFICATIONS	04-01B-12

VEHICLE APPLICATION

F-250 Heavy Duty and F-350 4x4

Official Licensed Product
Ford Motor Company

DESCRIPTION AND OPERATION

Suspension, F-250 Heavy Duty with Dana Model 50 Front Drive Axle

The F-250 Heavy Duty 4x4 Independent Front Suspension (IFS) system has a Dana Model 50 two-piece driving axle attached to the frame (5005) with two semi-elliptic, leaf-type springs.

- Each spring is clamped to the axle arm assembly with two U-bolts.
- The rear eye of the spring is attached to the front spring mounting bracket (5340).
- The front of the spring is attached to a shackle bracket.
- The front shock absorbers (18124) are the direct, double-acting type. They are attached to a frame bracket at the top and to the U-bolt spacer plate at the bottom.

DESCRIPTION AND OPERATION (Continued)

Front Suspension, F-250 Heavy Duty with Dana Model 50 IFS Front Drive Axle

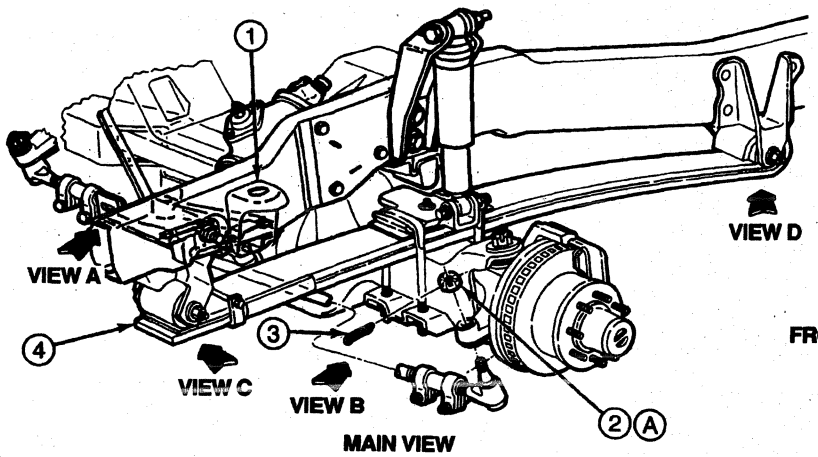

MAIN VIEW

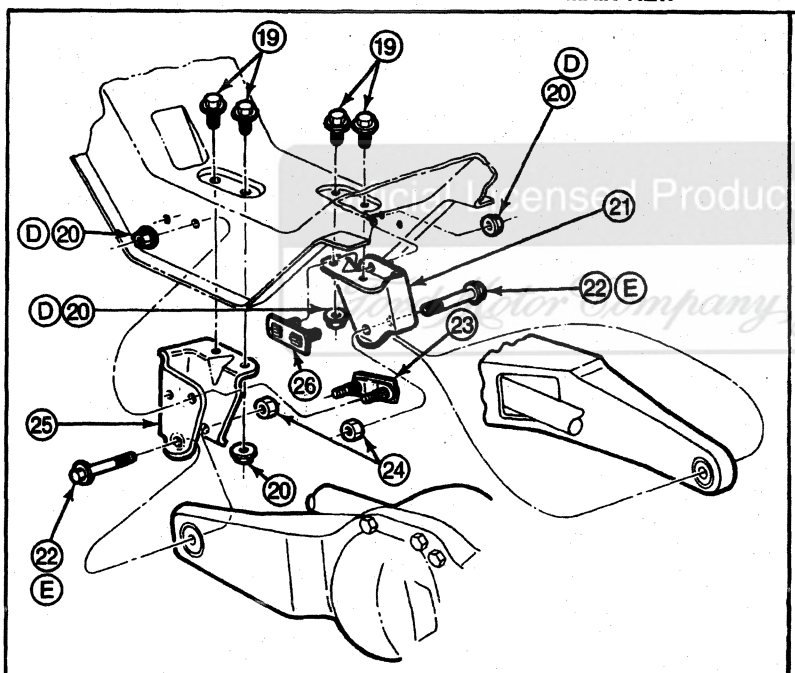

VIEW A

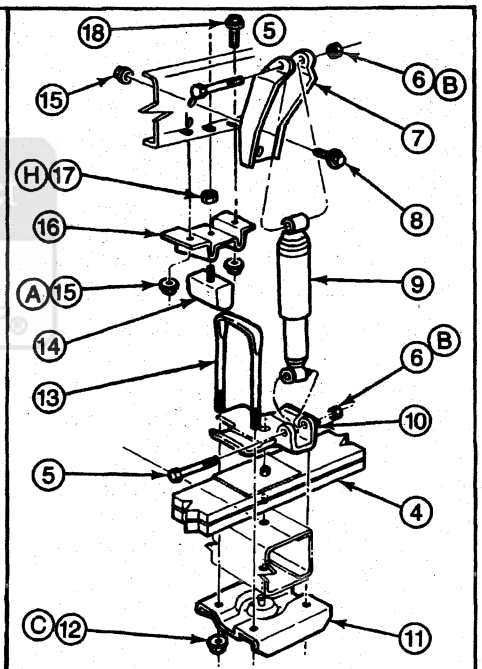

LH SIDE SHOWN, RH SIDE SAME
VIEW B

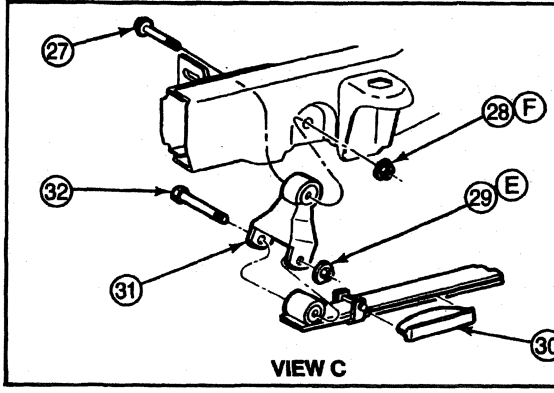

VIEW C

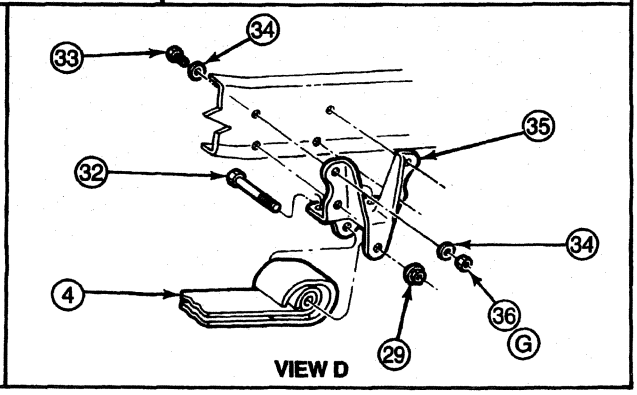

VIEW D

DF0057-A

DESCRIPTION AND OPERATION (Continued)

Item	Part Number	Description
1	3590	Steering Gear Sector Shaft Arm
2	N800895-S56	Nut
3	N642569-S36	Cotter Pin
4	5310	Front Leaf Spring
5	N800021-S2	Bolt
6	N806496-S301	Nut
7	18183	Front Shock Absorber Mounting Bracket
8	N802114-S2	Bolt
9	18124	Front Shock Absorber
10	5458	Front Spring Plate Spacer
11	5A500	U-Bolt Spacer
12	N801342-S2	Nut
13	N801485-S56	U-Bolt
14	4002	Front Suspension Bumper
15	N620483-S2	Nut
16	3B251	Front Suspension Bumper Bracket
17	N620482-S2	Nut
18	N605933-S2	Bolt
19	N802114-S2	Bolt
20	N802073-S2	Nut
21	3B176	Axle Pivot Bracket (RH)
22	N801079-S2	Bolt
23	N808243-S100	Bolt and Retainer
24	N620604-S100	Nut

(Continued)

Item	Part Number	Description
25	3K090	Front Axle Bearing Bracket
26	N808528-S100	Bolt and Retainer
27	N601522-S2	Bolt
28	N620485-S56	Nut
29	N620484-S56	Nut
30	5L302	Spring Insulator Sleeve
31	5K316	Front Spring Front Shackle
32	58634-S2	Bolt
33	58634	Bolt
34	44877-S2	Washer
35	5340	Front Spring Mounting Bracket
36	34987-S2	Nut
A	—	Tighten to 77-103 N·m (57-76 Lb-Ft)
B	—	Tighten to 60-80 N·m (44-59 Lb-Ft)
C	—	Tighten to 113-153 N·m (83-113 Lb-Ft)
D	—	Tighten to 88-118 N·m (65-87 Lb-Ft)
E	—	Tighten to 149-201 N·m (110-148 Lb-Ft)
F	—	Tighten to 170-230 N·m (125-170 Lb-Ft)
G	—	Tighten to 47-78 N·m (35-58 Lb-Ft)
H	—	Tighten to 31-40 N·m (23-30 Lb-Ft)

Official Licensed Product Ford Motor Company

Suspension, F-350 with Dana Model 60 Monobeam Front Drive Axle

The F-350 4x4 has a Dana Model 60 Monobeam one-piece driving axle attached to the frame (5005) with two semi-elliptical, leaf-type springs.

- Each spring is clamped to the axle assembly with two U-bolts.
- The rear eye of the spring is attached to the front spring mounting bracket (5340).
- The front of the spring is attached to a shackle bracket.
- On the right spring cap, a tracking bar is attached with the opposite end mounted on the front crossmember (5019).
- The front shock absorbers (18124) are the direct double-acting type. They are attached to a front shock absorber mounting bracket (18183) at the top and to the U-bolt spacer plate at the bottom.

DESCRIPTION AND OPERATION (Continued)

Front Suspension, F-350 with Dana Model 60 Monobeam Front Drive Axle

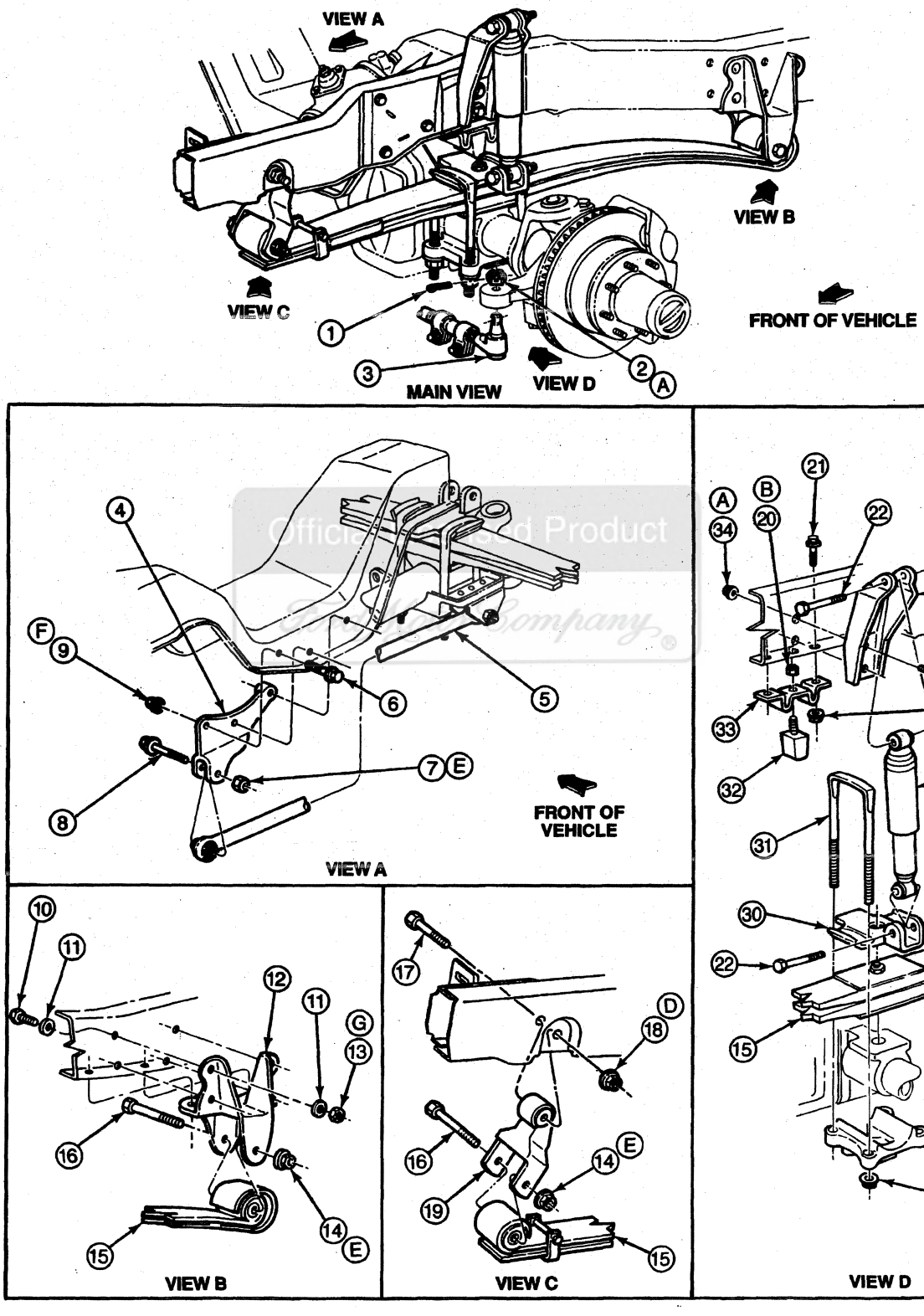

DESCRIPTION AND OPERATION (Continued)

Item	Part Number	Description
1	N642569-S56	Cotter Pin
2	N800895-S56	Nut
3	3B008	Tie Rod End
4	3A094	Tracking Bar Mounting Bracket
5	3B239	Tracking Bar Assy
6	N808591-S2	Bolt
7	N620604-S100	Nut
8	N803960-S2	Bolt
9	N802073-S2	Nut
10	58634-S2	Bolt
11	44877-S2	Washer
12	5340	Front Spring Mounting Bracket
13	34987-S2	Nut
14	N620484-S56	Nut
15	5310	Front Leaf Spring
16	N800991-S2	Bolt
17	N601522-S2	Bolt
18	N620485-S56	Nut
19	5K316	Shackle Assy
20	N620482-S2	Nut
21	N605933-S2	Bolt
22	800021	Bolt
23	N806496-S301	Nut

(Continued)

Item	Part Number	Description
24	18183	Front Shock Absorber Mounting Bracket
25	N802114	Bolt
26	620483-S2	Nut
27	18124	Front Shock Absorber
28	5A316	Spring Cap
29	801342	Nut
30	5458	Spacer Plate
31	N801342-S2	U-Bolt
32	4002	Front Suspension Bumper
33	3B251	Mounting Bracket
34	N620482-S2	Nut
A	—	Tighten to 60-80 N·m (44-59 Lb-Ft)
B	—	Tighten to 30-40 N·m (22-30 Lb-Ft)
C	—	Tighten to 115-163 N·m (85-120 Lb-Ft)
D	—	Tighten to 170-230 N·m (126-169 Lb-Ft)
E	—	Tighten to 163-203 N·m (120-150 Lb-Ft)
F	—	Tighten to 88-118 N·m (65-87 Lb-Ft)
G	—	Tighten to 47-78 N·m (35-58 Lb-Ft)

Official Licensed Product Ford Motor Company

Components

- Front wheel spindles (3105) or front wheel hub and spindles (3K207) transmit steering input, pivot on the front suspension lower and upper ball joints, and support front disc brake calipers (2B121).
- Front axles control lateral (side-to-side) movement of each front wheel (1007). Inner pivot attachment to the front crossmember (5019) is pivot point for suspension.
- Front suspension ball joints connect front wheel spindle to outer ends of the front suspension.
- Front shock absorbers (18124) provide necessary suspension dampening control.
- Front leaf springs allow proper setting of suspension ride heights and control suspension travel during driving/handling maneuvers.
- Front stabilizer bar (5482) transmits forces to control vehicle roll during cornering.

Component Replacement

- Gas-pressurized front shock absorbers (18124) must be replaced as an assembly. The front shock absorbers can be serviced individually. Replace only the damaged parts.
- Front leaf springs can be replaced individually.
- Front spring insulators (5414) can be replaced individually.
- Front wheel spindles (3105) can be replaced individually.
- Wheel hub and bearing assemblies can be replaced individually.
- Radius arms can be replaced individually.
- Front axles can be replaced individually.
- Ball joints can be replaced individually.
- Front stabilizer bar links (5K483) can be replaced individually.
- Front stabilizer bar (5482) can be replaced.

DESCRIPTION AND OPERATION (Continued)

- Stabilizer bar bracket insulators can be replaced individually.
- Stabilizer bar brackets (5486) can be replaced individually.

Fasteners, Suspension

Suspension fasteners are important retaining parts because they can affect performance of vital components and systems, and can result in major service expense. They must be replaced with fasteners of the same part number or with an equivalent part if replacement becomes necessary. **DO NOT** use a replacement part of lesser quality or substitute design. Torque values must be as specified during assembly to ensure proper retention of parts. New fasteners must be used whenever old fasteners are loosened or removed and when new components are installed.

Axle

One end of each axle is attached to the front wheel spindle (3105) and a radius arm. The other end is attached to a frame pivot bracket on the opposite side of the vehicle.

Each front wheel spindle is held in place on the axle by ball joints on I-beam axles that pivot on bronze bushings pressed in the upper and lower ends of the front wheel spindle on forged I-beam axles. A thrust bearing is installed between the lower end of the axle and the front wheel spindle to support the load on the axle. The steering arm is an integral part of the front wheel spindle.

Shock Absorber, Front

The hydraulic front shock absorbers (18124) are of the direct, double-acting type. They provide a continuous dampening effect both on compression and rebound. These front shock absorbers are of telescopic design with rubber grommets at the mounting points for quiet operation. The front shock absorbers are sealed and non-adjustable, and must be replaced as complete assemblies.

Wheel Bearing and Wheel Hub

The front wheels attach to the wheel hub (1104). The wheel hub is part of the front disc brake rotor. The front disc brake hub and rotor (1102) is supported by an inner and outer wheel bearing. The front disc brake hub and rotor is retained to the spindle with a nut and a washer.

Hubs, Automatic Locking

Refer to Section 05-03C in the Powertrain, Drivetrain Manual.

Hubs, Manual Locking

Refer to Section 05-03C in the Powertrain, Drivetrain Manual.

DIAGNOSIS AND TESTING

Suspension, Front

Refer to Section 04-00 and Section 00-04.

REMOVAL AND INSTALLATION

Spring, Leaf

Removal

1. Raise the vehicle with a frame hoist until the weight is off the front leaf spring with the wheels still touching the floor. Support the axle to prevent rotation.
2. Disconnect the lower end of the front shock absorber (18124) from the U-bolt spacer.

REMOVAL AND INSTALLATION (Continued)

3. Remove the U-bolts, U-bolt cap and spacer. For vehicles equipped with a Dana Model 60 Monobeam front drive axle, remove two tracking bar-to-right spring cap retaining bolts and tracking bar mounting bracket.

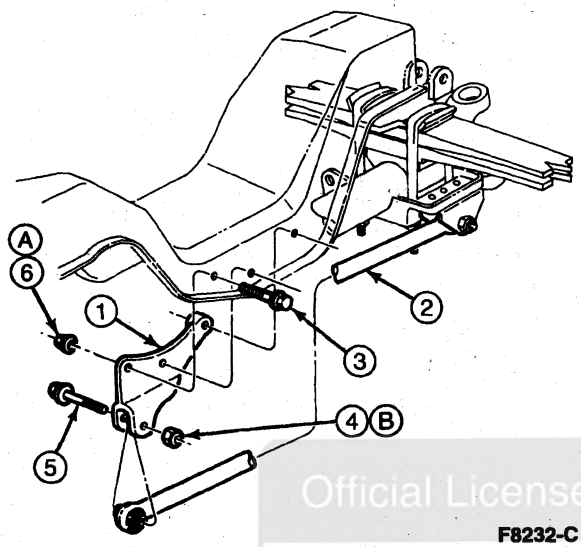

F8232-C

Item	Part Number	Description
1	3A094	Tracking Bar Mounting Bracket
2	3B239	Tracking Bar Assy
3	N808591-S2	Bolt
4	N620604-S100	Nut
5	N803960-S2	Bolt
6	N802073-S2	Nut
A	—	Tighten to 88-118 N·m (65-87 Lb-Ft)
B	—	Tighten to 163-203 N·m (120-150 Lb-Ft)

4. Remove the nut from the hanger bolt retaining the spring at the rear. Drive out the hanger bolt.
5. Remove nut connecting front shackle to spring eye.
6. Drive out the shackle bolt and remove the spring.

Installation

1. Position the new spring on the spring seat. Install the shackle bolt through the shackle and spring, and tighten to 163-203 N·m (120-150 lb-ft).
2. Position rear of spring allowing rear hanger bolt to be installed. Install the nut, and tighten to 163-203 N·m (120-150 lb-ft) for F-350 and 115-163 N·m (85-120 lb-ft) for F-250 Heavy Duty.
3. Position the U-bolt spacer and place the U-bolts in position through holes in the spring seat cap. Install but do not tighten the U-bolt nuts.
4. Make sure the spring center bolt is aligned with the indentation in the axle housing.
5. If vehicle is equipped with a tracking bar, connect mounting bracket and right spring cap retaining bolts.
6. Connect the lower end of the front shock absorber to the U-bolt spacer.
7. Lower the vehicle and tighten the U-bolt nuts to 115-163 N·m (85-120 lb-ft).

Wheel Spindle

Refer to Section 05-03A, Section 05-03B or Section 05-03C in the Powertrain, Drivetrain Manual.

Shock Absorber

CAUTION: The low pressure gas front shock absorbers (18124) are charged with nitrogen gas to 931 kPa (135 psi) for 1-inch and 1-3/16-inch bore, and 1034 kPa (150 psi) for 1-3/8-inch bore. Do not attempt to open, puncture or apply heat to the shock absorbers.

Removal

1. Remove front shock absorber-to-upper shock bracket nut and bolt.
2. Disconnect the lower end of the front shock absorber bolt and nut from the U-bolt plate.
3. Compress the front shock absorber and remove.

Installation

1. Insert front shock absorber into the front shock absorber mounting bracket (18183). Insert bolt and tighten nut to 60-80 N·m (44-59 lb-ft).
2. Attach the lower end of the front shock absorber to the U-bolt plate by installing the nut and bolt. Tighten to 60-80 N·m (44-59 lb-ft).

Wheel Hub Bolt

CAUTION: Service must be performed on any damaged components or the component that caused lug bolt (1107) to require replacement.

Removal

1. Raise the vehicle and install safety stands.
2. Remove the wheel and tire.

Official Licensed Product Ford Motor Company

REMOVAL AND INSTALLATION (Continued)

3. Remove the front disc brake hub and rotor (1102). Refer to Section 05-03C in the Powertrain, Drivetrain Manual.

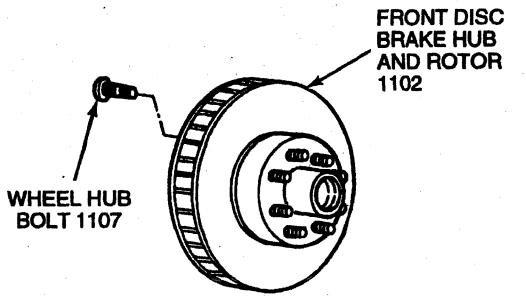

DF0059-A

4. Position the front disc brake hub and rotor in a press so ram pressure is not exerted directly on the surface of front disc brake hub and rotor. With appropriate press stock, press the lug bolt from the front disc brake hub and rotor. Discard the lug bolt.

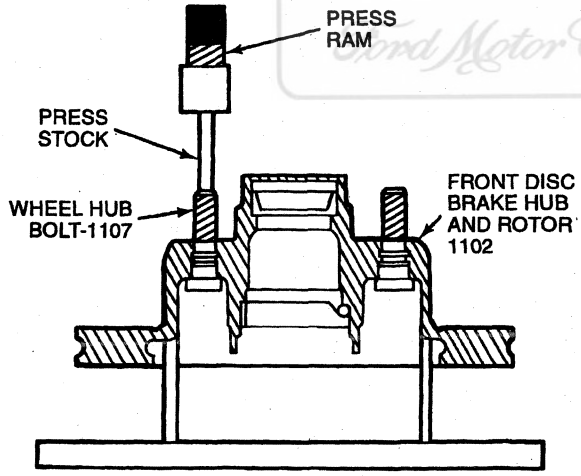

H4508-C

5. Inspect lug nuts (1012) for damaged threads. Discard if damaged.

Installation

1. Position a new lug bolt in the hole. Align the serrations of the new lug bolt with the serration marks from the old lug bolt. With a hammer, tap lightly on the lug bolt until the serrations on the lug bolt are started in the hole. Make sure the lug bolt is not installed off-center in front disc brake hub and rotor.
2. Position the front disc brake hub and rotor in a press so the front disc brake hub and rotor is supported on the wheel mounting flange. Allow enough clearance for the lug bolt to pass through the hole. Do not apply ram pressure directly on the rotor surface of front disc brake hub and rotor.
3. With appropriate press stock, press the stud flush against the inner surface of the hub and rotor.

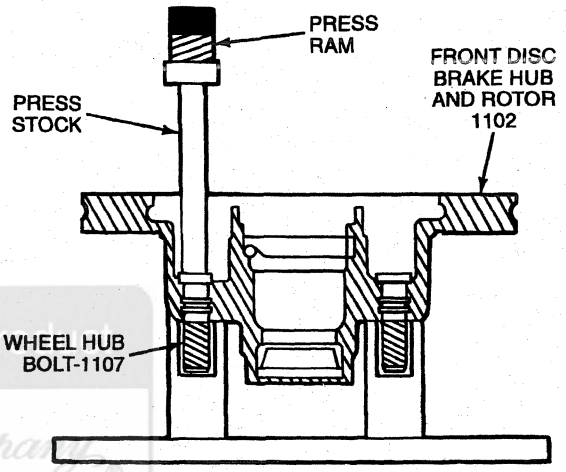

H4509-C

4. Install the front disc brake hub and rotor. Refer to Section 05-03C in the Powertrain, Drivetrain Manual.
5. Replace any damaged lug nuts.
6. Install the wheel (1007) and tire.

Ball Joint

Refer to Section 05-03A in the Powertrain, Drivetrain Manual.

Axle, Front

Refer to Section 05-03A and Section 05-03B in the Powertrain, Drivetrain Manual.

Axle Pivot Bushing

Refer to Section 05-03A in the Powertrain, Drivetrain Manual.

Official Licensed Product Ford Motor Company

REMOVAL AND INSTALLATION (Continued)

Axle Bearing Bracket, F-250 Heavy Duty

Removal

1. **WARNING: IF THE AXLE ARMS ARE NOT SECURELY SUPPORTED, THE AXLE ARMS WILL DROP SUDDENLY 102-152 MM (4-6 INCHES).**

   Raise vehicle on a hoist. Place supports securely under the axle arms near the front axle bearing bracket (3K090) and remove the front axle bearing bracket bolts.
2. If necessary, pry the axle out of the front axle bearing bracket and lower the axle.
3. If necessary, raise the engine to provide access to the vertical fasteners in the top of the front crossmember as follows:
   - Loosen the right and left engine mount bolts.
   - Align the fan blade to clear the shroud and raise the engine 51 mm (2 inches).
   - Block engine securely in place.
4. Remove and discard all front axle bearing bracket-to-crossmember fasteners and remove the front axle bearing brackets.

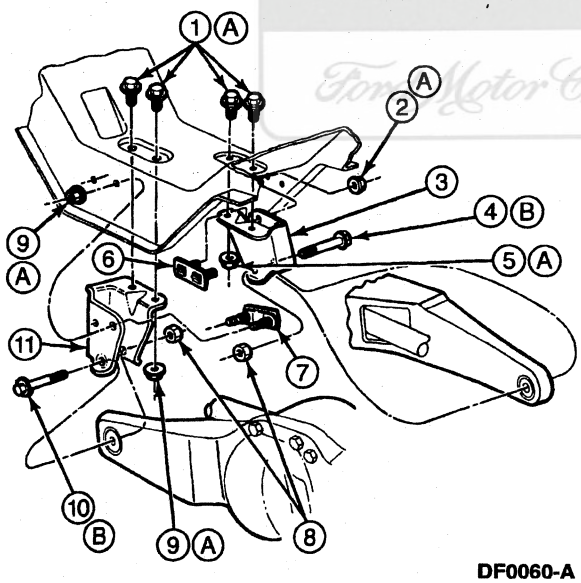

DF0060-A

Item	Part Number	Description
1	N802114-S2	Bolt
2	N802073-S2	Nut
3	3B176	Right Axle Pivot Bracket
4	N801079-S2	Bolt
5	N802073-S2	Nut
6	N808528-S100	Bolt and Retainer
7	N808243-S100	Bolt and Retainer
8	N620604-S100	Nut
9	N802073-S2	Nut
10	N801079-S2	Bolt
11	3K090	Front Axle Bearing Bracket
A	—	Tighten to 88-118 N·m (65-87 Lb-Ft)
B	—	Tighten to 149-201 N·m (110-148 Lb-Ft)

Installation

1. NOTE: The vertical fasteners for each front axle bearing bracket must be installed with bolt heads adjacent to the engine oil pan to maintain required clearance. Horizontal fasteners must be installed with the bolt heads on the inside surface of the front axle bearing brackets.

   Position the front axle bearing bracket to the front crossmember (5019) and loosely assemble the bolts, retainer assembly and nuts. Do not tighten at this time.
2. To make sure positioning of the front axle bearing brackets is correct, tighten the horizontal fasteners in the side of the front crossmember to 88-118 N·m (65-87 lb-ft). Tighten the vertical fasteners in the top of the front crossmember to 88-118 N·m (65-87 lb-ft).
3. Position the axles in the front axle bearing bracket. Install the pivot bolt and tighten nut to 149-201 N·m (110-148 lb-ft).
4. Remove the blocks under the engine and lower the engine into position. Tighten the bolts to specification listed in the appropriate engine section in Group 03.

Stabilizer Bar Link Assembly, F-250 Heavy Duty

Removal

1. Remove bolts, washers and nuts securing the stabilizer bar links to spring seat caps (both sides).
2. Remove the nut, washer, and bolt securing the stabilizer bar links to the stabilizer bar brackets (both sides).
3. Remove nuts, washers and insulators attaching stabilizer bar links to front stabilizer bar.
4. Remove link assemblies.
5. Remove nuts and bolts securing retainers to stabilizer bar bracket and remove retainers.
6. Remove front stabilizer bar (5482).

Installation

1. Replace the components in reverse order of removal without tightening bolts.
2. Tighten nuts connecting stabilizer bar links to spring seat caps on both sides 70-100 N·m (52-74 lb-ft).

Official Licensed Product
Ford Motor Company

REMOVAL AND INSTALLATION (Continued)

3. Tighten nuts connecting stabilizer bar links to stabilizer bar 21-33 N·m (15-24 lb-ft).
4. Tighten nuts and bolts connecting retainers to stabilizer bar bracket 35-45 N·m (26-33 lb-ft).

Front Stabilizer Bar and Stabilizer Bar Link Assembly, F-250 Heavy Duty with Dana Model 50 IFS Front Drive Axle

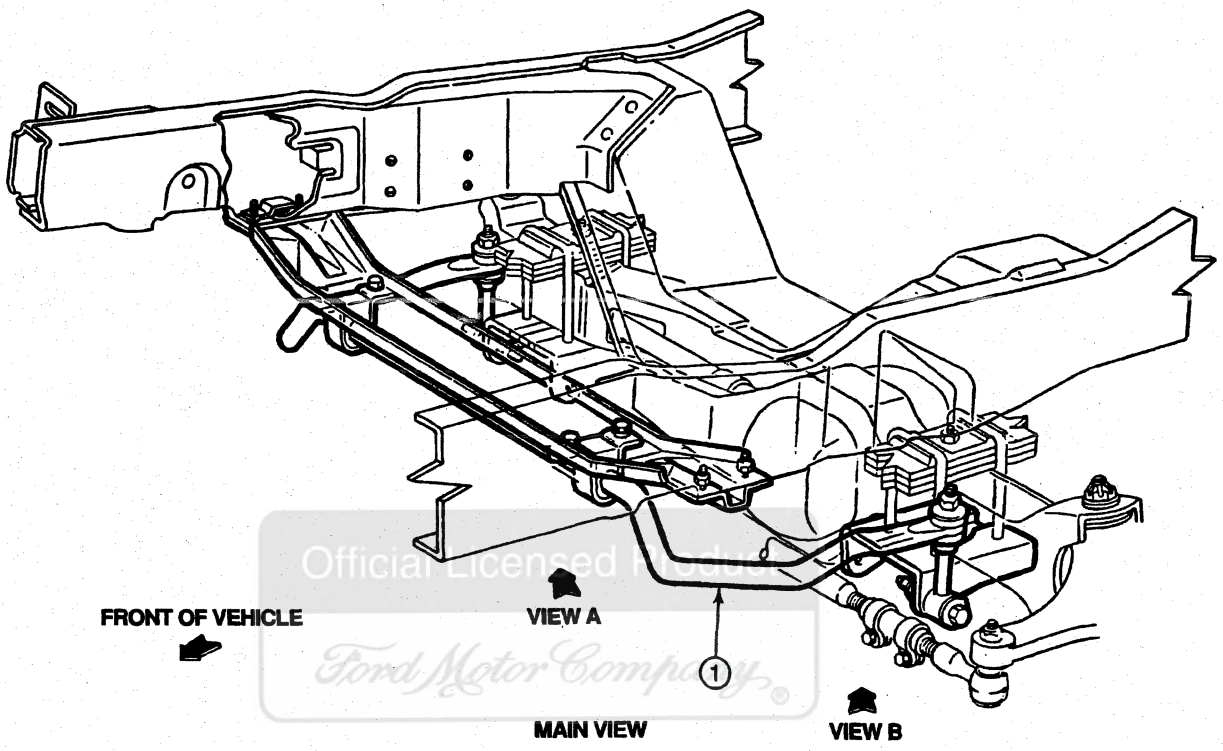

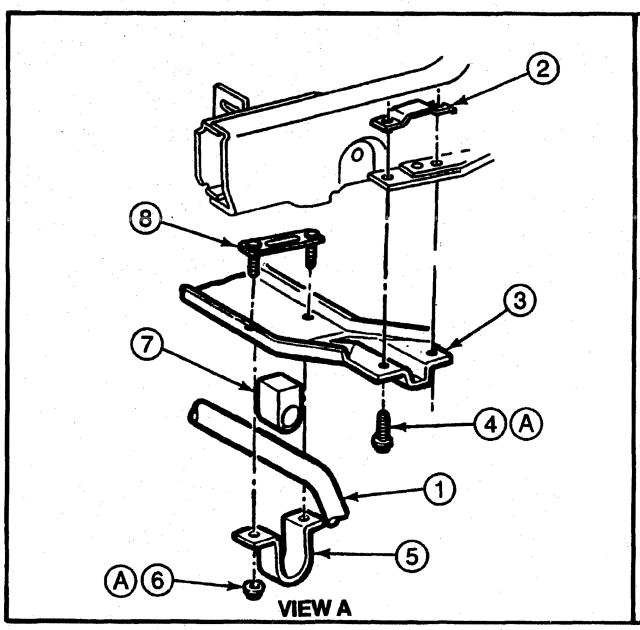

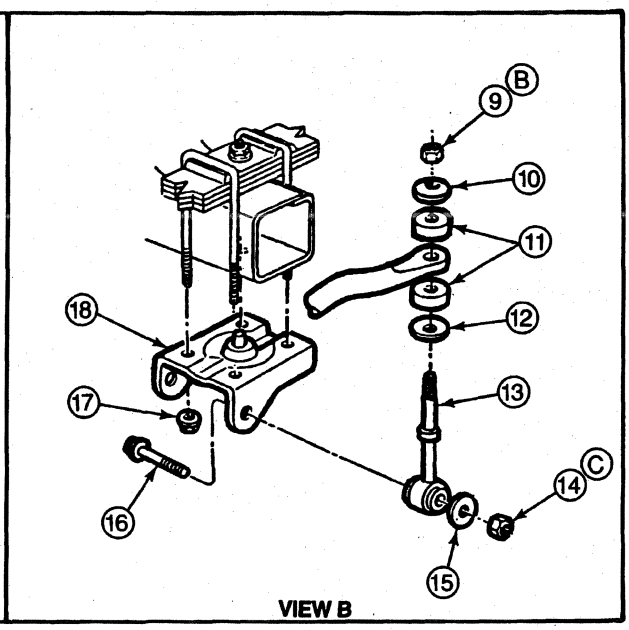

DF0061-A

REMOVAL AND INSTALLATION (Continued)

Item	Part Number	Description
1	5482	Front Stabilizer Bar
2	5D486	Plate Assy
3	3B353	Stabilizer Bar Bracket
4	N605919-S2	Bolt
5	3B353	Stabilizer Bar Bracket
6	N620482-S36	Nut
7	5484	Stabilizer Bar Insulator
8	N806789-S2	Bolt and Retainer
9	384485-S2	Nut
10	18041	Washer
11	4A037	Insulator

(Continued)

Item	Part Number	Description
12	1B171	Washer
13	5K483	Front Stabilizer Bar Link
14	N620469-S2	Nut
15	N801527-S2	Washer
16	N605704-S100	Bolt
17	N801342-S2	Nut
18	5A500	Spring Seat Cap
A	—	Tighten to 35-45 N·m (26-33 Lb-Ft)
B	—	Tighten to 21-33 N·m (15-24 Lb-Ft)
C	—	Tighten to 70-100 N·m (52-74 Lb-Ft)

Stabilizer Bar Link Assembly, F-350

Removal

1. Disconnect left and right ends of the front stabilizer bar from the link assembly attached to the frame side rail mounting brackets.
2. Disconnect the retainer bolts and U-bolt. Remove the front stabilizer bar from the front axle.
3. Remove front stabilizer bar link (5K483) from the frame side rail mounting brackets.

Installation

1. Loosely assemble the entire front stabilizer bar system with both link assemblies loosely attached to the frame mounting brackets.
2. Position front stabilizer bar on the axle.
3. Check to be sure front stabilizer bar insulators are seated in the retainers, and front stabilizer bar is centered between the front leaf springs.
4. Attach the front stabilizer bar to the axle by assembling the retainers to the axle mounting brackets. Tighten retaining bolts and U-bolt to 48-68 N·m (36-50 lb-ft).
5. Install the link assemblies to the frame mounting brackets using the bolts, washers, and lock nuts. Tighten the lock nut to 70-100 N·m (52-74 lb-ft).
6. Install the link assembly to the front stabilizer bar with two cup washers, two rubber insulators, and one lock nut. Tighten the lock nut to 21-33 N·m (15-24 lb-ft).

Stabilizer Bar, F-350 with Dana Model 60 Monobeam Front Drive Axle

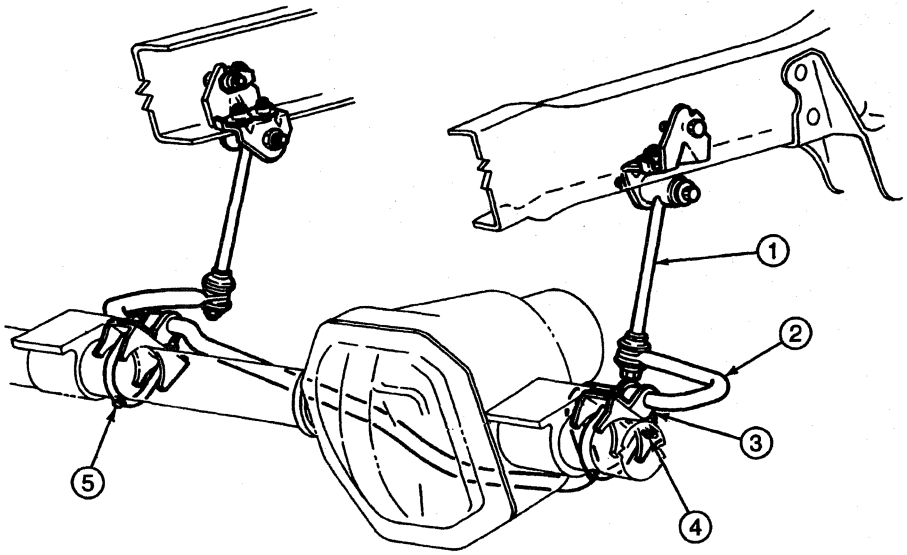

E6336-C

REMOVAL AND INSTALLATION (Continued)

Item	Part Number	Description
1	5K483	Front Stabilizer Bar Link
2	5482	Front Stabilizer Bar

(Continued)

Item	Part Number	Description
3	5486	Stabilizer Bar Bracket
4	N805013-S100	Bolt
5	N803850-S	U-Bolt

Bumper, Front

Removal

1. Remove the hex-head bolt or nut that holds front suspension bumper to frame.
2. Remove front suspension bumper (3020).

Installation

1. Position front suspension bumper in the same holes as those from which it was removed in frame.
2. Install the hex-head bolt and tighten to 17-23 N·m (13-17 lb-ft).

SPECIFICATIONS

TORQUE SPECIFICATIONS, F-250 HEAVY DUTY 4x4

Description	N·m	Lb-Ft
Shock Bracket to Axle	26-34	19-25
Front Spring to Axle U-Bolt	113-153	83-113
Front Spring Assembly to Hanger Bracket	149-201	109-148
Front Spring Shackle to Frame	170-230	125-170
Front Spring to Shackle	149-201	110-148
Front Shock Bracket to Frame	70-100	52-74
Front Shock to Front Spring Plate Spacer, Lower	60-80	44-59
Front Shock to Bracket, Upper	70-100	52-74
Front Suspension Bumper to Bumper Bracket	31-40	23-30
Bumper Bracket to Frame	77-103	57-76
Front Suspension Bumper to Frame	17-23	13-17
Axle Pivot Bracket to Frame (Horizontal)	88-118	65-87
Axle Pivot Bracket to Frame (Vertical)	149-201	110-148

TORQUE SPECIFICATIONS, F-350 4x4 WITH DANA 60 MONOBEAM FRONT DRIVE AXLE

Description	N·m	Lb-Ft
Bumper Mounting Bracket to Frame	70-100	52-74
Bumper to Mounting Bracket	30-40	22-30
Front Shock Bracket to Frame	68-92	51-67
Front Shock to Shock Bracket, Upper	60-80	44-59
Front Shock to Spacer Plate Bracket, Lower	60-80	44-59
Front Spring Assembly to Shackle	163-203	120-150
Front Spring Assembly to Spring Bracket	163-203	120-150
Front Spring Shackle to Frame	170-230	126-169
Stabilizer Bar Link Assembly Mounting Bracket to Frame	35-45	26-33
Stabilizer Bar Link Assembly to Mounting Bracket	70-100	52-74
Stabilizer Bar to Link Assembly	21-33	15-24
Tie Rod End to Spindle Arm	60-80	44-59
Tracking Bar Assembly to Mounting Bracket	163-203	120-150
Front Spring Mounting Bracket to Frame	47-78	35-58
Tracking Bar Mounting Bracket to Crossmember	88-118	65-87
U-Bolt to Front Spring Cap	115-163	85-120
U-Bolt to Stabilizer Bar Mounting Bracket (RH)	48-68	36-50
Stabilizer Bar to Mounting Bracket (LH)	48-68	36-50

Official Licensed

SECTION 04-02 Suspension, Rear

SUBJECT	PAGE
VEHICLE APPLICATION	04-02-1
DESCRIPTION AND OPERATION	
Component Replacement	04-02-1
Components	04-02-1
Inspection	04-02-1
Rear Axle Assembly	04-02-1
Rear Spring	04-02-1
Shock Absorber	04-02-1
Stabilizer Bar	04-02-1
Suspension	04-02-1
DIAGNOSIS AND TESTING	
Inspection and Verification	04-02-2
Suspension, Rear	04-02-2
Symptom Chart	04-02-2
REMOVAL AND INSTALLATION	
Shock Absorber	04-02-7
Spring	04-02-2
Stabilizer Bar	04-02-7
Wheel Hub Bolt, Rear	04-02-9
ADJUSTMENTS	
Alignment	04-02-9
Pinion Angle, Rear Axle	04-02-9
Rear Spring Anti-Squeak Insert	04-02-10
Vehicle Lean, F-250, F-350 4x2 and 4x4, F-Super Duty Chassis Cab	04-02-10
Vehicle Lean, F-Super Duty Motorhome	04-02-10
SPECIFICATIONS	04-02-10
SPECIAL SERVICE TOOLS/EQUIPMENT	04-02-11

VEHICLE APPLICATION

F-250 Heavy Duty, F-350 and F-Super Duty

DESCRIPTION AND OPERATION

Ford Motor Company Official Licensed Product

Suspension

Semi-elliptic, leaf-type rear springs (5560) are used for the rear axle suspension. The forward end of each rear spring is attached to a bracket on the frame (5005). The rear end of each rear spring is shackled to a rear spring shackle bracket (5775) on the frame.

Optional auxiliary rear springs are mounted on top of the main rear spring with free ends. These provide load carrying capacity and stability. Auxiliary springs are standard on all F-350 and all F-Super Duty vehicles (except F-Super Duty Motorhome Chassis).

Components

Inspection

Start diagnosis of possible suspension problems with a thorough inspection of the vehicle. Include all suspension components and mounting points to identify any that are worn, damaged or not securely installed.

Rear Spring

Controls suspension travel and provides ride height control.

Rear Axle Assembly

Supports the differential, axles, wheels (1007) and brake assemblies.

Shock Absorber

The hydraulic shock absorbers are of the direct, double-acting type. They provide a continuous dampening effect on both compression and rebound. These shock absorbers are of telescopic design with rubber grommets at the mounting points for quiet operation. The shock absorbers are sealed, non-adjustable units and must be replaced as complete assemblies.

Stabilizer Bar

Transmits force to control vehicle roll during cornering. Resists lateral movement.

Component Replacement

- The rear axle bumper (4730) can be replaced individually.
- The rear shock absorber (18080) must be replaced as an assembly. Shock absorbers do not need to be replaced in pairs.
- Rear spring (5560) can be replaced individually.
- Rear stabilizer bar (5A772) and stabilizer bar link (5K484) can be replaced individually.

DIAGNOSIS AND TESTING

Suspension, Rear

Refer to Section 04-00.

Inspection and Verification

Verify vehicle owner's original concern by road testing; then refer to the following symptom chart.

Symptom Chart

REAR SUSPENSION

Condition	Possible Source	Action
• Squeak	• Loose mounting bolts. • Loose shackle bushing. • Loose rear spring.	• TIGHTEN. • REPLACE. • INSTALL rear spring anti-squeak inserts (if none currently installed).
• Rear Spring ClampDamaged	• Service worn or damaged rear spring clamp.	• INSTALL new rear spring clamp.
• Metal Burrs Rubbing Between the Leaves	• Clip rivet.	• REMOVE burrs.
• Body Rolls	• Weak stabilizer bar. • Worn or deteriorated stabilizer bar bushing(s). • Worn or deteriorated shock.	• REPLACE stabilizer bar. • REPLACE stabilizer bar bushing(s). • REPLACE shock assembly.
• Poor Riding Comfort	• Worn or deteriorated shock.	• REPLACE shock assembly.
• Body Leans	• Weak rear spring. • Worn or deteriorated stabilizer bar bushing(s).	• REPLACE rear spring. • REPLACE stabilizer bar bushing(s).
• Abnormal Noise from Suspension System	• Loose suspension connections. • Worn or deteriorated shock. • Worn or deteriorated stabilizer bar bushing(s).	• TIGHTEN suspension connections. • REPLACE shock. • REPLACE stabilizer bar bushing(s).
• General Driving Instability	• Worn or deteriorated shock. • Worn or deteriorated stabilizer bar bushing(s). • Improperly adjusted wheel alignment. • Damaged or unbalanced wheel(s).	• REPLACE shock assembly. • REPLACE stabilizer bar bushing(s). • ADJUST wheel alignment. REFER to Section 04-00. • CHECK wheel balance. BALANCE if necessary. REFER to Section 04-04.

Official Ford Product

REMOVAL AND INSTALLATION

Spring

Removal

1. Raise the vehicle frame (5005) until the weight is off the rear springs (5560), with the tires still touching the floor.
2. Remove the nuts from the spring U-bolts and drive the U-bolts from the U-bolt rear spring plate (5796).
3. Remove the auxiliary spring and spacer, if so equipped.
4. Remove the spring-to-bracket nut and bolt at the front of the rear spring.
5. Remove the shackle lower nuts and bolts at the rear of the rear spring.
6. Remove the rear spring and rear spring shackle (5776) from the rear spring shackle bracket (5775).
7. Remove the bolt and nut that secures the rear spring shackle to the rear spring.

Installation

1. Follow removal procedure in reverse order.

REMOVAL AND INSTALLATION (Continued)

2. Tighten the spring U-bolt nuts to specifications as listed at the end of this section. Tighten the front spring bolt and nut and the rear shackle bolts and nuts to specifications listed at the end of this section.

Rear Spring Installation, F-250 Heavy Duty and F-350, 4x2 and 4x4, Regular Cab and SuperCab

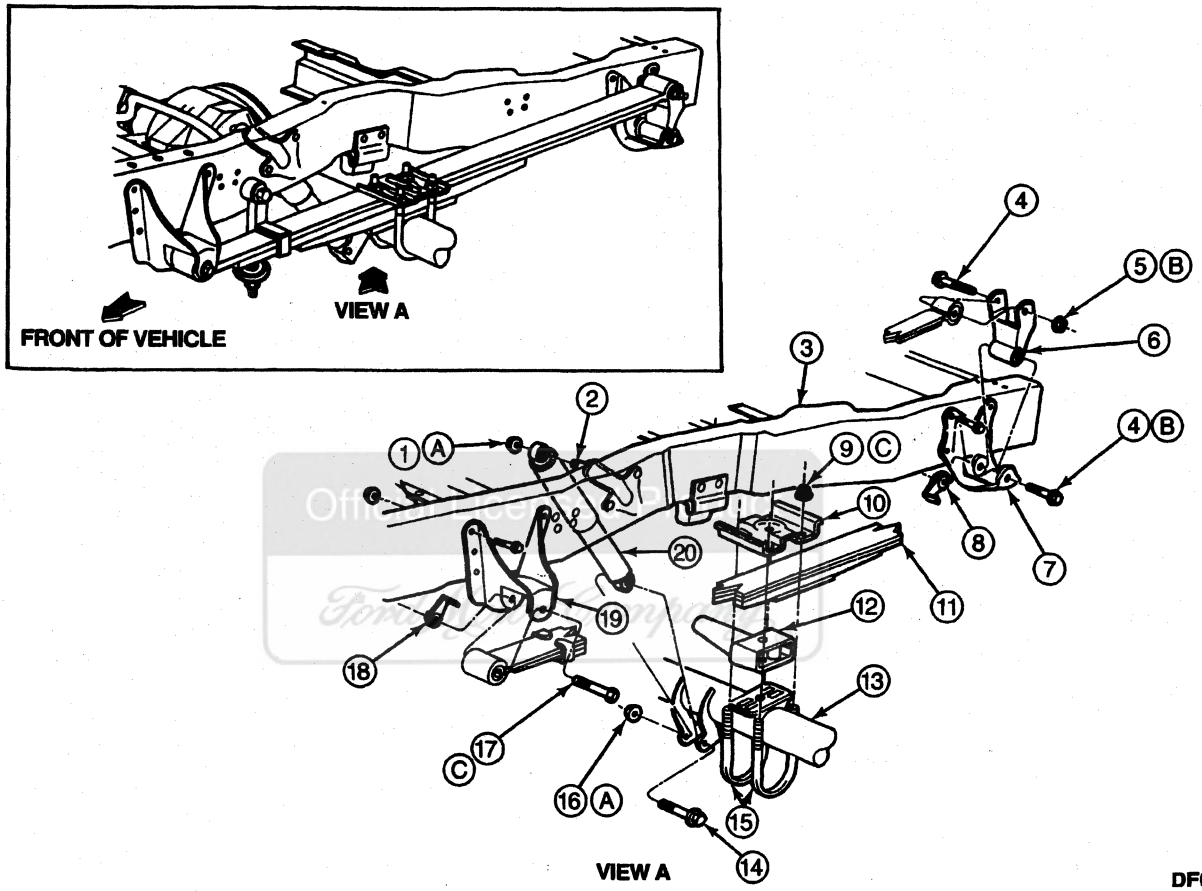

Item	Part Number	Description
1	N806085-S8	Nut and Washer Assy
2	18192	Rear Shock Absorber Bracket
3	5005	Frame
4	N803805-S2	Bolt
5	N620484-S56	Nut
6	5776	Rear Spring Shackle
7	5775	Rear Spring Shackle Bracket
8	N806368-S56	Nut
9	N620485-S56	Nut
10	5796	Rear Spring Plate
11	5560	Rear Spring
12	5A799	Rear Spring Spacer (F250)
12	5598	Rear Spring Spacer (F350)

(Continued)

Item	Part Number	Description
13	4001	Rear Axle
14	N605705-S2	Bolt
15	N804419-S101	U-Bolt
16	N806496-S100	Nut and Washer Assy
17	N601526-S2	Bolt
18	N806367-S56	Nut and Retainer
19	5775	Rear Spring Shackle Bracket
20	18080	Shock Absorber
A	—	Tighten to 52-73 N·m (38-54 Lb-Ft)
B	—	Tighten to 113-153 N·m (83-113 Lb-Ft)
C	—	Tighten to 192-258 N·m (142-190 Lb-Ft)

REMOVAL AND INSTALLATION (Continued)

Rear Spring Installation with Auxiliary Spring, F-350 4x2 and 4x4, Chassis Cab

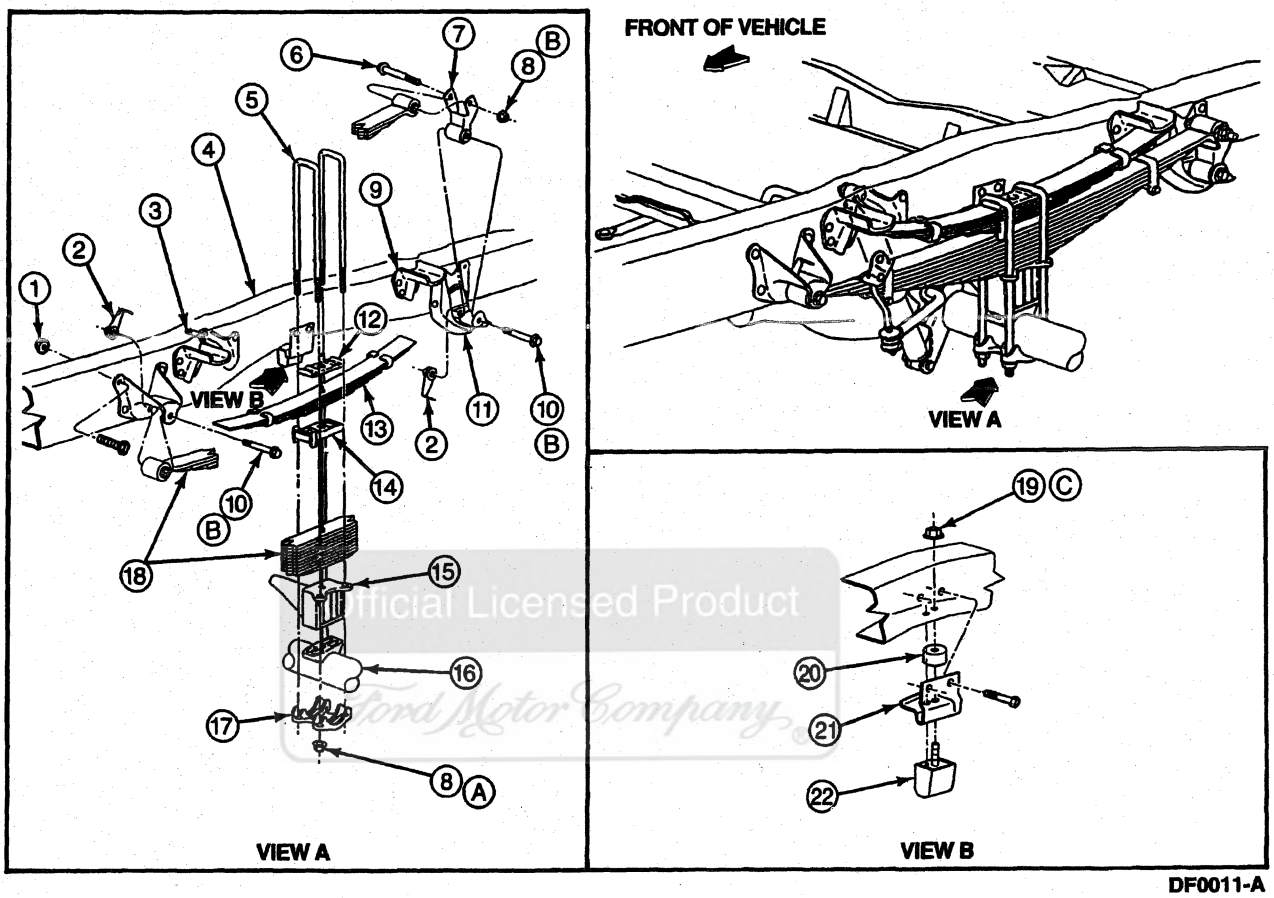

DF0011-A

Item	Part Number	Description
1	5775	Rear Spring Shackle Bracket
2	N620485-S56	Nut and Retainer
3	18192	Rear Shock Absorber Bracket
4	5005	Frame
5	N804662-S101	U-Bolt
6	N800950-S2	Bolt
7	5776	Rear Spring Shackle
8	N620485-S56	Nut
9	5700	Auxiliary Spring Bracket
10	N800950-S	Bolt
11	5775	Rear Spring Shackle Bracket
12	5796	Rear Spring Plate

(Continued)

Item	Part Number	Description
13	5588	Auxiliary Spring
14	5594	Spacer, Auxiliary Spring
15	5598	Spacer, Rear Spring
16	4001	Rear Axle
17	5796	Rear Spring Plate
18	5560	Rear Spring
19	N620482-S56	Nut
20	N802860-S	Spacer
21	4731	Rear Axle Bumper Bracket
22	4730	Rear Axle Bumper
A	—	Tighten to 191-259 N·m (141-191 Lb-Ft)
B	—	Tighten to 213-288 N·m (157-212 Lb-Ft)
C	—	Tighten to 22-28 N·m (16-21 Lb-Ft)

Official Licensed Product
Ford Motor Company

REMOVAL AND INSTALLATION (Continued)

Rear Spring Installation, F-Super Duty Chassis Cab

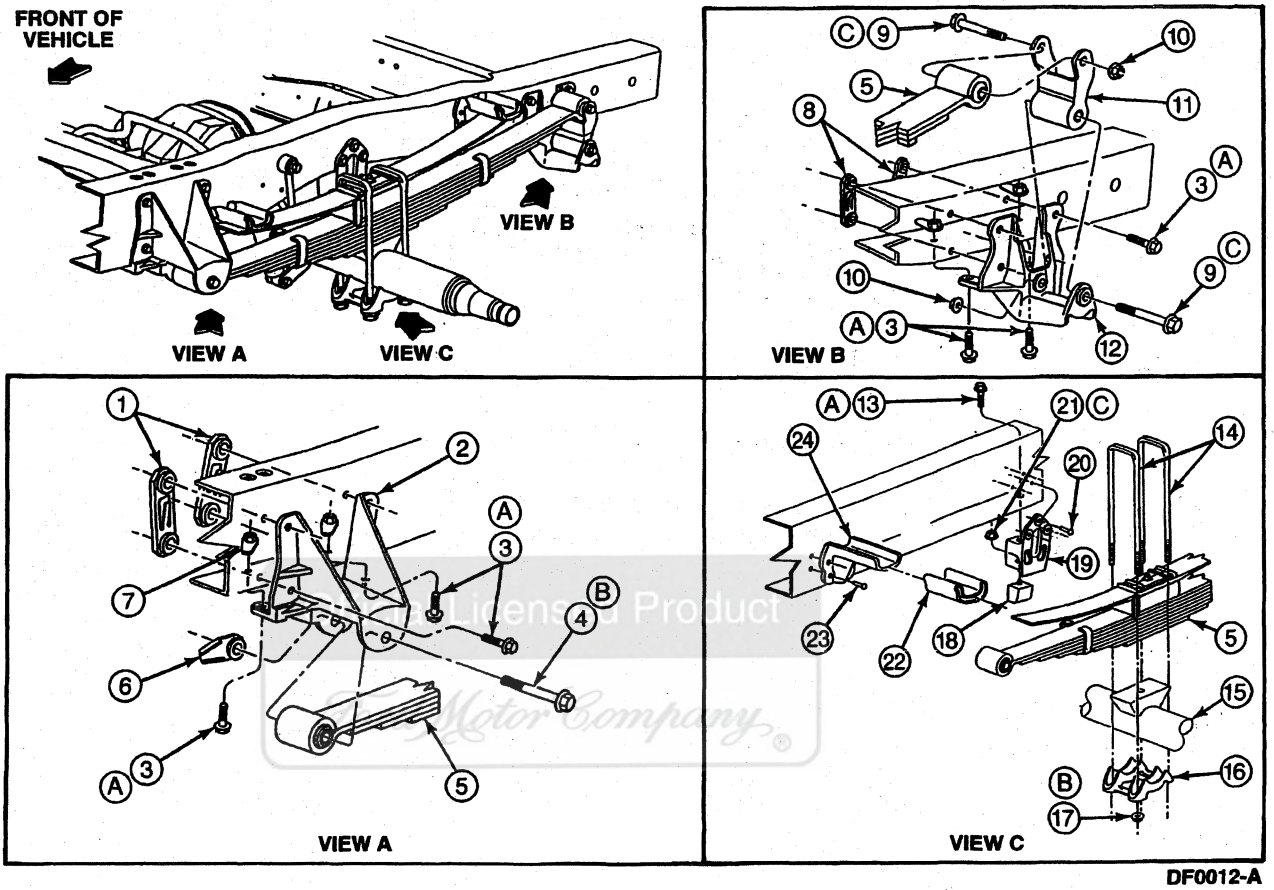

Item	Part Number	Description
1	N805135-S56	Nut and Retainer
2	5775	Rear Spring Shackle Bracket
3	N802115-S2	Bolt
4	N805444-S100	Bolt
5	5A975	Spring Assy, Rear Axle
6	N805161-S56	Nut and Retainer
7	N805007-S100	Nut and Retainer
8	N805136-S56	Nut and Retainer
9	N805041-S2	Bolt
10	N620485-S56	Nut
11	5776	Rear Spring Shackle
12	5775	Rear Spring Shackle Bracket
13	N605918-S2	Bolt
14	N808497-S56	U-Bolt

(Continued)

Item	Part Number	Description
15	4001	Rear Axle
16	5796	Spring Seat Cap
17	N805028-S56	Nut
18	4730	Rear Axle Bumper
19	4731	Rear Axle Bumper Bracket
20	N647100-S	Rivet
21	N620482-S56	Nut
22	5A978	Spring Bracket Liner
23	N647100-S	Rivet
24	5700	Auxiliary Spring Bracket
A	—	Tighten to 77-103 N·m (57-75 Lb-Ft)
B	—	Tighten to 255-345 N·m (189-254 Lb-Ft)
C	—	Tighten to 213-287 N·m (157-212 Lb-Ft)

REMOVAL AND INSTALLATION (Continued)

Rear Spring Installation, F-Super Duty Motorhome Chassis

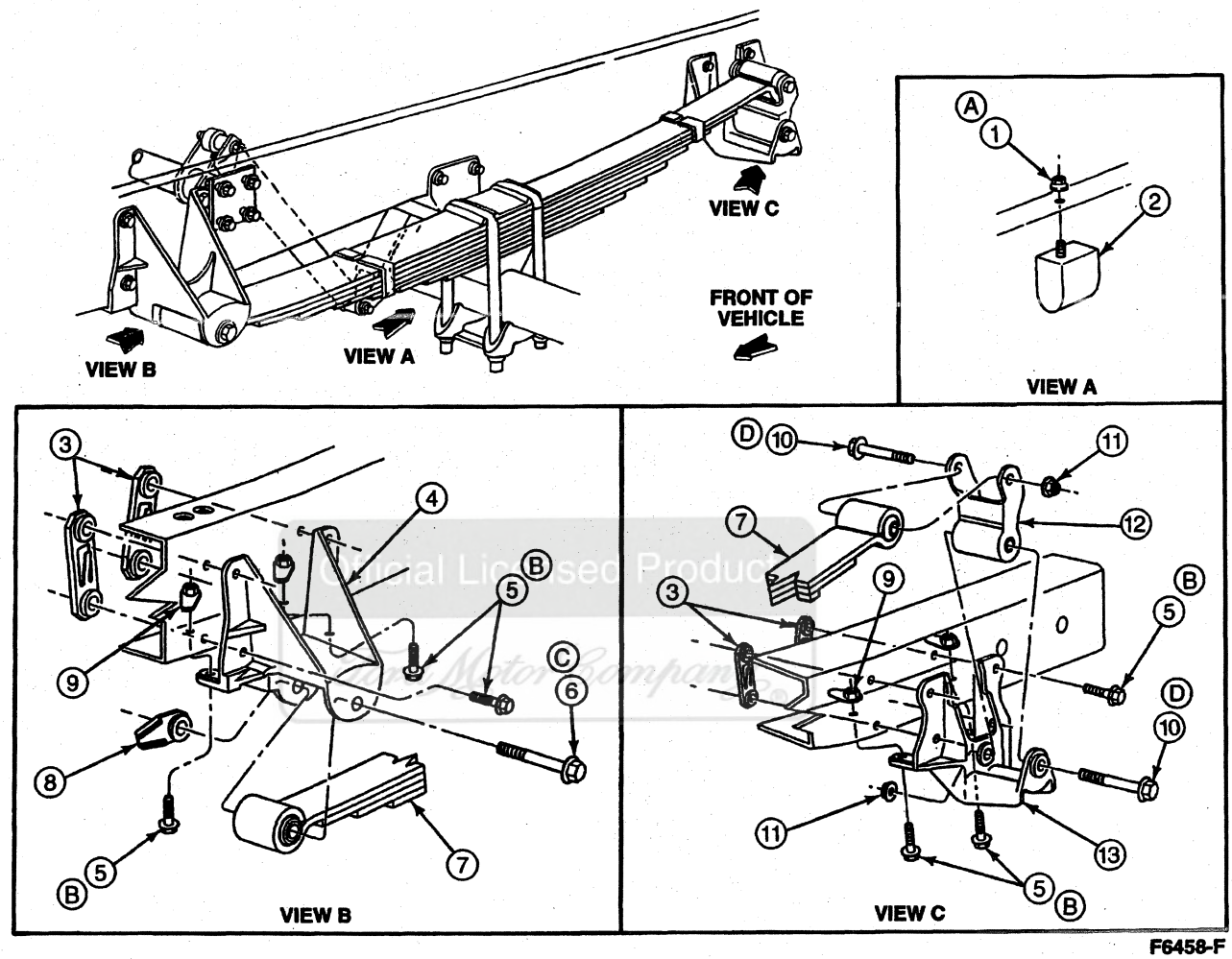

Item	Part Number	Description
1	N620482-S56	Nut
2	4002	Bumper
3	N805135-S56	Nut and Retainer
4	5785	Front Hanger Bracket
5	N802115-S2	Bolt
6	N805444-S100	Bolt
7	5A975	Spring Assy
8	N805161-S56	Nut and Retainer
9	N805007-S100	Nut and Retainer
10	N805041-S2	Bolt

(Continued)

Item	Part Number	Description
11	N620485-S56	Nut
12	5776	Bracket
13	5775	Bracket
A	—	Tighten to 34-46 N·m (25-34 Lb-Ft)
B	—	Tighten to 77-102 N·m (57-75 Lb-Ft)
C	—	Tighten to 340-460 N·m (251-339 Lb-Ft)
D	—	Tighten to 213-287 N·m (157-212 Lb-Ft)

REMOVAL AND INSTALLATION (Continued)

Shock Absorber

Removal

1. **CAUTION: The low pressure gas shock absorbers are charged with nitrogen gas to 931 kPa (135 psi). Do not attempt to open, puncture or apply heat to the shock absorbers.**

   Raise the vehicle on a hoist and support rear axle (4001) with Rotunda Hi-Lift Jack 164-R3508 or 164-R3513 or equivalent.
2. Remove the shock absorber lower retaining nut and bolt, and swing the lower end free of the mounting bracket on the rear axle.
3. Remove the nut from the upper shock absorber mount.

Installation

1. Follow removal procedure in reverse order.
2. Tighten upper retaining nut to 53-73 N·m (39-54 lb-ft) and lower axle nut to 53-73 N·m (39-54 lb-ft).

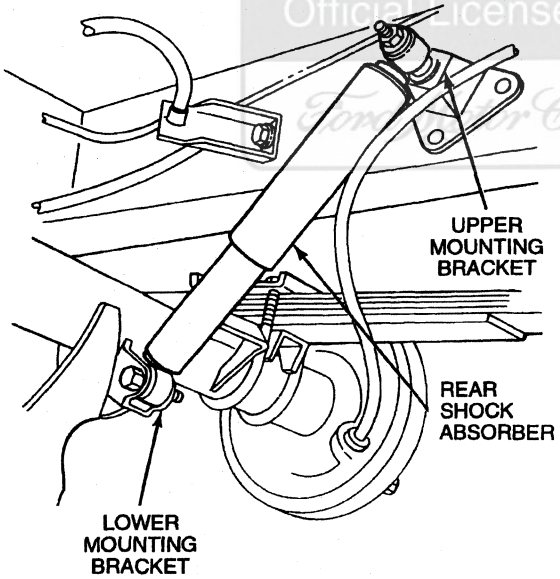

DF0013-A

Official Licensed Product
Ford Motor Company

Stabilizer Bar

Removal

1. Remove nut from lower end of stabilizer bar link (5K484).
2. Remove outer washer and insulator. Disconnect rear stabilizer bar (5A772) from stabilizer bar link.
3. Remove inner insulators and washers. Disconnect stabilizer bar link from frame (5005) by removing nuts and bolts.
4. Remove nuts or bolts which fasten U-bolts and rear spring plates (5796) to rear axle (4001).

Installation

1. Follow removal procedure in reverse order.
2. Tighten fasteners to specifications.

REMOVAL AND INSTALLATION (Continued)

Rear Stabilizer Bar Installation

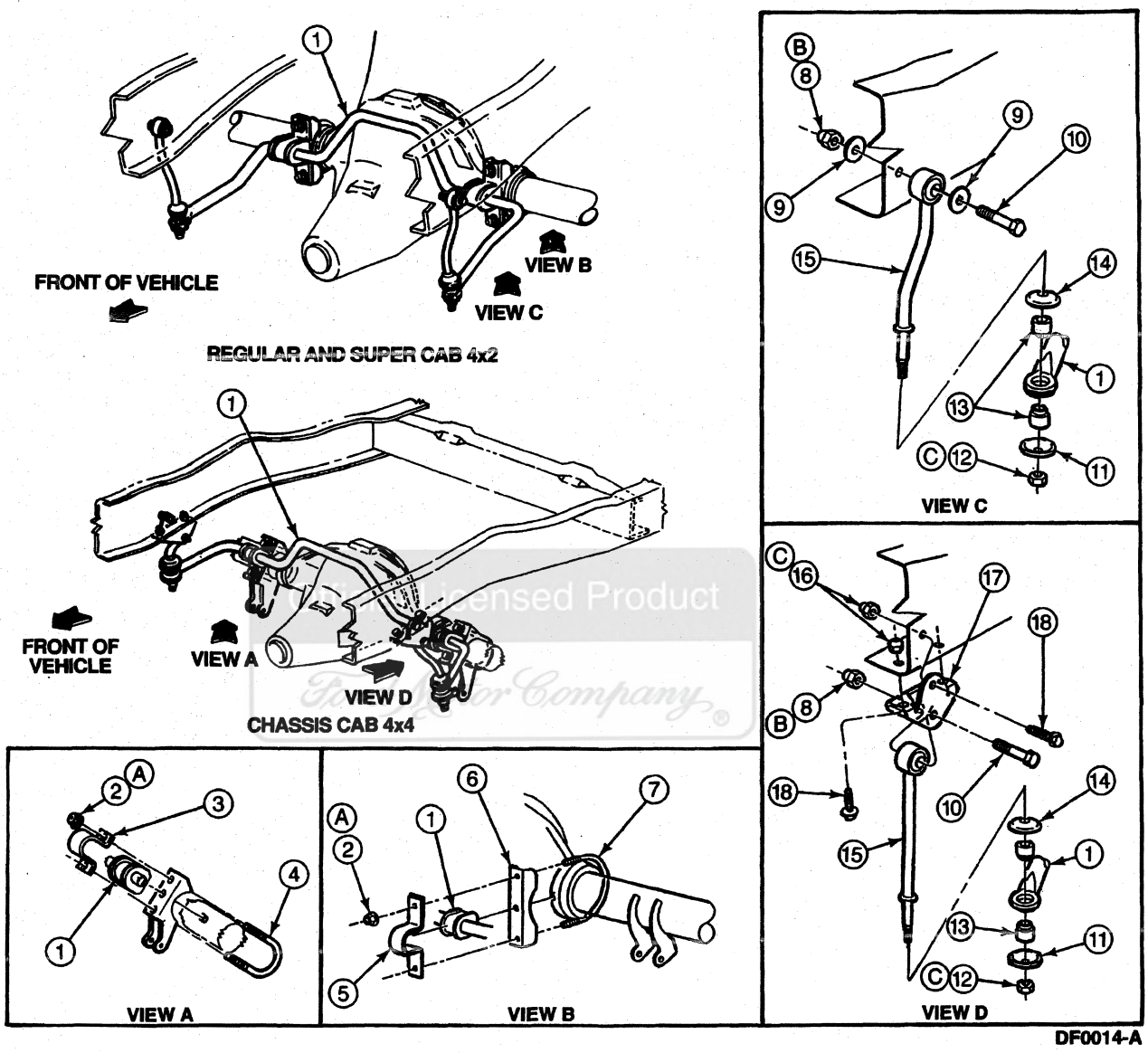

Item	Part Number	Description
1	5A772	Rear Stabilizer Bar
2	N620482-S56	Nut
3	5486	Stabilizer Bar Bracket
4	N803771-S56	U-Bolt
5	5486	Stabilizer Bar Bracket
6	5486	Stabilizer Bar Bracket
7	N803758-S56	Bolt
8	N620469-S2	Nut
9	N801527-S2	Washer
10	N605704-S2	Bolt
11	18041	Washer

(Continued)

Item	Part Number	Description
12	N384485-S56	Nut
13	5493	Lower Suspension Arm Stabilizer Bar Insulator
14	18171	Washer
15	5K484	Stabilizer Bar Link
16	N620468-S2	Nut
17	5L499	Bracket, Link Assy
18	N605920-S2	Bolt
A	—	Tighten to 41-54 N·m (30-40 Lb-Ft)

(Continued)

REMOVAL AND INSTALLATION (Continued)

Item	Part Number	Description
B	—	Tighten to 55-85 N·m (41-63 Lb-Ft)

(Continued)

Item	Part Number	Description
C	—	Tighten to 24-31 N·m (18-23 Lb-Ft)

Wheel Hub Bolt, Rear

SPECIAL SERVICE TOOL(S) REQUIRED

Description	Tool Number
C-Frame and Clamp Assembly Tool	T74P-3044-A1

CAUTION: Never use a hammer to remove the wheel hub bolt nut. Damage to the axle shaft flange or rear wheel bearing can result.

Removal

1. Raise the vehicle and install safety stands.
2. Remove the wheel and tire assembly. Refer to Section 04-04.
3. Remove the brake drum (1126) from the studs.

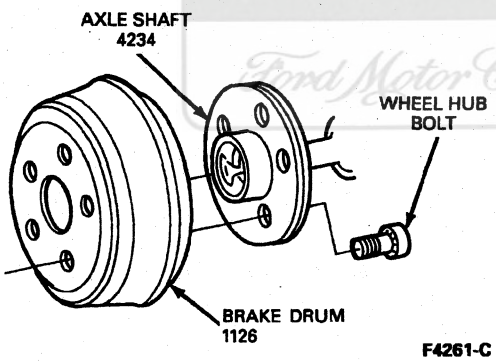

F4261-C

4. Using C-Frame and Clamp Assembly Tool T74P-3044-A1, press the lug bolt (1107) from its seat in the axle flange. The lug bolt can also be removed by pressing it out using an appropriate sized socket and C-clamp. Discard the lug bolt.

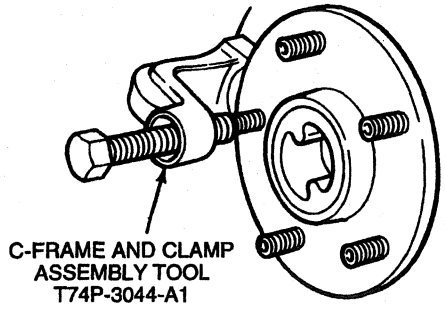

WHEEL HUB BOLT REMOVAL

F5630-D

Installation

1. Insert new lug bolt in hole in flange. Rotate lug bolt slowly. Make sure serrations are aligned with those made by the original bolt.
2. Place four flatwashers over the outside end of the stud and thread the lug nut (1012) with the flat side against the washers.
3. **CAUTION: DO NOT use air tools. The serrations can be stripped from the stud.**

   Tighten the lug nut until the bolt head seats against the back side of the flange.
4. Remove lug nut and washers.
5. Install brake drum and wheel (1007).
6. Lower the vehicle.

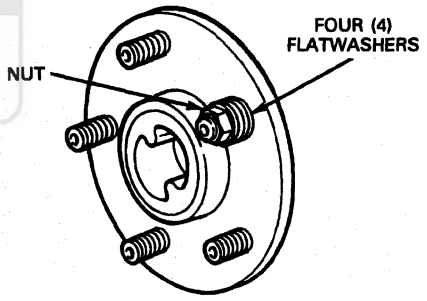

WHEEL HUB BOLT INSTALLATION

F5631-C

ADJUSTMENTS

Alignment

For front end alignment, refer to Section 04-00. For rear axle alignment, refer to Section 05-00 in the Powertrain, Drivetrain Manual.

Pinion Angle, Rear Axle

Refer to Section 05-00 in the Powertrain, Drivetrain Manual.

Official Licensed Product Ford Motor Company

ADJUSTMENTS (Continued)

Vehicle Lean, F-250, F-350 4x2 and 4x4, F-Super Duty Chassis Cab

A side-to-side lean at the rear of the vehicle can be adjusted by approximately 9.52 mm (3/8 inch) by installing a shim between the rear spring (5560) and rear axle (4001) on the low side of the vehicle.

A low at the rear vehicle can be raised approximately 9.52 mm (3/8 inch) by installation of one shim on each side.

If side-to-side lean at rear is greater than 12.70 mm (1/2 inch), switch the rear springs side to side. Use the following procedure to install the shim.

1. Raise the vehicle frame (5005) until the weight is off the rear springs with the tires still touching the floor.
2. Loosen the spring U-bolts to allow the rear axle to separate from the rear spring approximately 12.70 mm (1/2 inch).
3. Position the shim (D7TA-5742-AA) between the rear spring and rear axle with the long edge of the shim parallel to the side of the rear spring and the spring tie bolt head through the hole in the shim. On 4x4 vehicles, position the shim between the rear spring and axle space. Tape can be used to hold the shim in position.
4. Make sure spring leaves are properly aligned and the spring U-bolts contact the edges of the rear spring or axle seat.
5. Tighten the spring U-bolt sufficiently so the spring tie bolt head that extends through the shim enters the hold in the axle seat.

For additional vehicle lean information, refer to Section 04-00.

Vehicle Lean, F-Super Duty Motorhome

Front — Obtain Vehicle Attitude Kit F1TD-5K648-AA and follow installation instructions in kit.

Rear — Obtain Rear Spring (Raise) Kit F1TD-5A581-AA and follow installation instructions in kit.

Rear Spring Anti-Squeak Insert

1. Raise the vehicle by the frame (5005) so the rear axle (4001) hangs freely.
2. Provide clearance between the leaves of the spring to allow insertion of the rear spring anti-squeak inserts (5586). This will require either the removal of the restraining bolt on the rear spring clamp (5724), or the bending of the wrap-around clip ends, depending upon the type of clip. A prybar can be used at time of tip liner insertion to gain additional clearance.

REAR SPRING CLAMP-5724

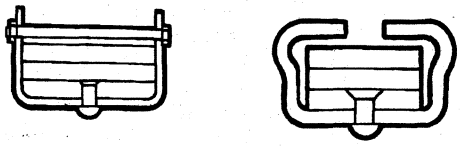

F7738-B

3. NOTE: Do not attempt to install a rear spring anti-squeak insert between the lowest primary leaf and the short, 12.70 mm (1/2-inch) thick secondary leaf found at the bottom of the leaf stack on some assemblies.

   Slide the rear spring anti-squeak insert between the leaves until the liner extends approximately 6.35 mm (0.25 inch) beyond the tip of the lower leaf.
4. Position a jack, such as Rotunda Hi-Lift Jack 164-R3508 or 164-R3513 or equivalent and raise the rear axle to load the rear springs (5560) placing the leaves in contact with one another at the clip locations.
5. NOTE: On some of the rear spring anti-squeak inserts, sections of the edge used to center the rear spring anti-squeak inserts on the spring leaves may need to be trimmed off to accommodate the rear spring clamp.

   Install rear spring clamps or install the replacement service clip.

SPECIFICATIONS

TORQUE SPECIFICATIONS, F-SUPER DUTY MOTORHOME CHASSIS

Description	N·m	Lb-Ft
Suspension Bumper-to-Frame Nut	34-46	25-34
Leaf Spring-to-Axle U-Bolt Nut	255-345	189-254
Leaf Spring-to-Front Bracket Nut and Bolt	340-460	251-339
Leaf Spring-to-Rear Shackle Bracket Nut and Bolt	213-287	157-212
Rear Shackle-to-Frame Mounted Bracket Nut and Bolt	77-102	57-75
Shock Absorber (Lower Mount)-to-Axle Nut and Bolt	300-405	220-300
Shock Absorber (Upper Mount)-to-Bracket Nut and Bolt	300-405	220-300
Shock Absorber Upper Bracket-to-Frame Nuts and Bolts	300-405	220-300
Stabilizer Bar-to-Axle Nut	41-54	30-40
Stabilizer Link-to-Frame Nut and Bolt	54-82	40-60
Stabilizer Link-to-Stabilizer Bar Nut	20-34	15-25

Official Licensed Product
Ford Motor Company

SPECIFICATIONS (Continued)

TORQUE SPECIFICATIONS, F-250 HEAVY DUTY, F-350, F-SUPER DUTY CHASSIS CAB

Description	N·m	Lb-Ft
Suspension Bumper-to-Frame Nut	22-28	16-21
Leaf Spring-to-Axle U-Bolt Nut, F-250 Heavy Duty, F-350 4x2 Chassis Cab	192-258	142-190
Leaf Spring-to-Axle U-Bolt Nut, F-Super Duty	255-345	189-254
Leaf Spring-to-Front Bracket Nut and Bolt, F-250 Heavy Duty, F-350	192-258	142-190
Leaf Spring-to-Front Bracket and Nut, F-350 Chassis Cab	213-288	157-212
Leaf Spring-to-Front Bracket Nut and Bolt, F-Super Duty	340-460	251-339
Leaf Spring-to-Rear Shackle Nut and Bolt, F-250 Heavy Duty, F-350 4x2 Chassis Cab	113-153	83-113
Leaf Spring-to-Rear Shackle Nut and Bolt, F-350 and F-Super Duty	213-287	157-212
Rear Shackle-to-Frame Nut and Bolt, F-250 Heavy Duty, F-350 4x2 Chassis Cab	77-103	57-75
Rear Shackle-to-Frame Nut and Bolt, F-350 Chassis Cab and F-Super Duty	213-287	157-212
Shock Absorber (Lower Mount) to Axle Nut and Bolt.	52-73	38-54
Shock Absorber (Upper Mount)-to-Frame Nut, All	52-73	38-54
Shock Absorber / Stabilizer Bar Bracket-to-Axle Nut, F-350 Chassis Cab	40-54	30-40
Shock Absorber / Stabilizer Bar-to-Axle Nut, F-Super Duty	34-46	25-34

(Continued)

TORQUE SPECIFICATIONS, F-250 HEAVY DUTY, F-350, F-SUPER DUTY CHASSIS CAB (Cont'd)

Description	N·m	Lb-Ft
Stabilizer Bar-to-Axle Nut	41-54	30-40
Stabilizer Bar-to-Axle Bolt, F-Super Duty	34-46	25-34
Stabilizer Link Bracket-to-Frame Nut and Bolt, All 4x4 Vehicles	24-31	18-23
Stabilizer Link-to-Bracket Nut and Bolt, All 4x4 Vehicles	55-85	41-63
Stabilizer Link-to-Frame Nut and Bolt, All 4x2 Vehicles	55-85	41-63
Stabilizer Link-to-Stabilizer Bar Nut	24-31	18-23

SPECIAL SERVICE TOOLS / EQUIPMENT

SPECIAL SERVICE TOOLS REQUIRED

Tool Number / Description	Illustration
T74P-3044-A1 C-Frame and Clamp Assembly Tool	T74P-3044-A1

ROTUNDA EQUIPMENT

Model	Description
164-R3508	Hi-Lift Jack
164-R3513	Hi-Lift Jack

Official Licensed Product Ford Motor Company

SECTION 04-04 Wheels and Tires

SUBJECT	PAGE
VEHICLE APPLICATION	04-04-1
DESCRIPTION AND OPERATION	
Hub and Rotor, Four-Wheel Disc Brake	04-04-4
Lug Nuts	04-04-2
Anti-Theft	04-04-2
Safety	04-04-3
Precautions When Servicing Truck Tires	04-04-3
Tires	04-04-1
Vehicle, New, Break-In	04-04-4
Wheel and Tire Assemblies	04-04-1
Wheel Assembly	04-04-2
Front	04-04-2
Rear	04-04-2
Wheels	04-04-2
DIAGNOSIS AND TESTING	
Inspection and Verification	04-04-5
Road Test	04-04-6
Engine Speed Sensitive	04-04-6
Torque Sensitive	04-04-6
Vehicle Speed Sensitive	04-04-6
Wheel and Tire Checking Procedure	04-04-5
Tire Wear Diagnosis	04-04-5
Symptom Chart	04-04-7
REMOVAL AND INSTALLATION	
Tire	04-04-10
Precautions	04-04-10
Replacement	04-04-10
Tire Service	04-04-10
Wheel and Tire	04-04-9
Wheel Covers	04-04-10

SUBJECT	PAGE
REMOVAL AND INSTALLATION (Cont'd.)	
Wheel Installation	04-04-10
Wheel Ornaments	04-04-10
Center Attached Wheel Covers	04-04-11
Wheel Replacement, Front	04-04-11
Wheel Replacement, Rear	04-04-12
CLEANING AND INSPECTION	
Leaks	04-04-14
Maintenance and Protection in Corrosive Environments	04-04-15
Tire Inflation	04-04-15
Tire Maintenance	04-04-15
Tire Rotation	04-04-16
Tire Sizes	04-04-14
Tires	04-04-14
Tread Wear Indicators	04-04-16
Valves	04-04-14
Wheel and Tire Indexing	04-04-16
Wheel Covers, Wheel Ornamentation	04-04-14
Cleaning	04-04-14
Wheel Maintenance	04-04-15
During Tire Changes	04-04-15
During Tire Inspection	04-04-15
Wheels	04-04-13
Aluminum	04-04-14
Flange Area	04-04-14
Steel	04-04-13
SPECIFICATIONS	04-04-16
SPECIAL SERVICE TOOLS/EQUIPMENT	04-04-18

VEHICLE APPLICATION

F-Series

DESCRIPTION AND OPERATION

Wheel and Tire Assemblies

Factory-installed tires and wheels are designed to operate satisfactorily with loads up to and including full-rated vehicle load capacity when inflated to recommended inflation pressures.

Correct tire pressures and driving techniques have an important influence on tire life. Heavy cornering, excessively rapid acceleration and unnecessary sharp braking increase tire wear.

Tires

When replacing tires, it is recommended to use tires of the same size, speed rating, load range and construction type (radial) as originally installed on the vehicle. Use of any other tire size or type may seriously affect ride, handling, speedometer/odometer calibration, vehicle ground clearance and tire clearance to the body and chassis.

WARNING: DO NOT MIX DIFFERENT TYPES OF TIRES (RADIAL, BIAS OR BIAS-BELTED) ON THE SAME VEHICLE EXCEPT IN EMERGENCIES BECAUSE VEHICLE HANDLING CAN BE SERIOUSLY AFFECTED AND MIGHT RESULT IN LOSS OF CONTROL.

Consider the following when replacing tires:

- To achieve best all-around vehicle performance, tires of different construction should not be mixed on the same vehicle.
- It is recommended that new tires be installed in pairs on the same axle shaft (4234).

DESCRIPTION AND OPERATION (Continued)

- When replacing only one tire, pair it with the tire having the most tread, to equalize braking traction.
- Snow tires should be of a size and type equivalent to other tires on the vehicle as recommended on the tire decal.

Wheels

Wheels must be replaced when they are bent, dented, heavily rusted, have air leaks or elongated wheel hub bolt holes, or have excessive lateral or radial runout. Wheels with a lateral or radial runout greater than the recommended specification may cause an objectionable, high-speed vehicle vibration.

Replacement wheels must be equal to the original equipment wheels in load capacity, diameter, width, offset and mounting configuration. An improperly selected wheel may affect wheel and bearing life, ground and tire clearance, or speedometer and odometer calibrations.

Corrosion buildup can result in wheels sticking to the axle or rotor flange after extensive service. To prevent this from recurring, use the following procedure once the wheels are removed:

1. Clean axle/rotor flange and wheel bore of corrosion with wire brush, steel wool or other suitable material.
2. Coat wheel bore with Disc Brake Caliper Slide Grease D7AZ-19590-A or equivalent meeting Ford specification ESA-M1C172-A. Do not apply grease to wheel hub bolt nut seats or lug bolts (1107).
3. Install wheel on vehicle.

Wheel Assembly

Front

Rear Wheel Drive

Each front wheel and tire assembly is attached by lug nuts (1012) to its respective front disc brake hub and rotor (1102). Two opposed tapered roller bearings are installed in each front disc brake hub and rotor. A grease retainer is installed at the inner end of the wheel hubs (1104) to prevent lubricant from leaking. The front disc brake hub and rotor is retained on its front wheel spindle (3105) by the adjusting nut, nut lock and cotter pin. Refer to Section 04-01A.

Four-Wheel Drive

A description of the locking hub assemblies used on vehicles equipped with 4-wheel drive is found in Section 05-03C.

Rear

Information on rear wheels (hubs and drums) is found in the Powertrain, Drivetrain Manual, Group 05. For semi-floating wheel hubs and bearings, refer to the appropriate rear axle section in Group 05. For full-floating wheel hubs and bearings, refer to Section 05-02A or Section 05-02D in the Powertrain, Drivetrain Manual.

F-350 and F-Super Duty Commercial Chassis vehicles equipped with dual wheel rear axles have the wheel and tire assembly attached with integral two-piece swiveling lug nuts.

Lug Nuts

WARNING: F-350 AND F-SUPER DUTY DUAL REAR WHEELS USE FLAT (INTEGRAL TWO-PIECE SWIVELING) 9/16-18 LUG NUTS (1012); CONVENTIONAL NOT PERMITTED.

Anti-Theft

Aluminum wheels on some vehicles are equipped with anti-theft lug nuts (one per wheel) that are installed during vehicle pre-delivery. The key is on the right-hand side of the engine compartment. To allow vehicle service in the event the key has been misplaced, a Rotunda Master Key Set 164-R3104 or equivalent is available at most Ford dealer service departments. The key has a circular keyway that is matched to the slot in the anti-theft lug nut.

CAUTION: Make sure the key is held square to the lug nut. If the key is on an angle, it can become damaged, or can damage the anti-theft lug nut. DO NOT use a power impact wrench on the wheel hub bolt nut key.

To remove or install the anti-theft lug nut, insert the key into the slot of the lug nut, place the wheel hub bolt nut wrench on the key, and while applying pressure on the key, remove or install the lug nut.

Official Licensed Product

DESCRIPTION AND OPERATION (Continued)

Safety

Precautions When Servicing Truck Tires

WARNING: NEVER RUN THE ENGINE WITH ONE WHEEL OFF THE GROUND, FOR EXAMPLE, WHEN CHANGING A TIRE. THE WHEEL RESTING ON THE GROUND COULD CAUSE THE VEHICLE TO MOVE.

WARNING: THE TIRE AND WHEEL MUST ALWAYS BE PROPERLY MATCHED. IT IS VERY IMPORTANT TO DETERMINE THE SIZE OF EACH COMPONENT BEFORE ANY ASSEMBLY OPERATIONS COMMENCE. DO NOT MOUNT A 16-INCH TIRE ON A 16.5-INCH WHEEL. FAILURE TO ADHERE TO THESE INSTRUCTIONS COULD RESULT IN AN EXPLOSIVE SEPARATION AND CAUSE SERIOUS BODILY INJURY OR DEATH. DO NOT MOUNT A 16.5-INCH TIRE ON A 16-INCH WHEEL. THE TIRE WILL COME OFF WITHOUT WARNING.

- Follow the safety procedures described in this manual and obtain safety literature from the wheel and rim manufacturer, NHTSA or OSHA. If you have any questions, consult the distributor or manufacturer directly. The load-carrying requirements of each vehicle also must be determined before selecting the proper tire / wheel combination.
- Always remember the weakest weight-carrying component of the vehicle (i.e., tire, wheel, axle, bearings, etc.) determines its overall maximum and safe load carrying capacity for the vehicle.
- When replacing tires, use the same size, load range and construction type (bias, bias belted or radial) as originally installed on the vehicle, of a type that meets Ford specifications for the vehicle.

NOTE: If the tire is to be reinstalled on an original equipment wheel, mark the tire at the valve stem hole so it can be reassembled in the same relative position.

NOTE: Use of improper replacement wheels and tires may adversely affect ride, handling, load carrying capacity, wheel bearing life, tire clearance to body and chassis components, vehicle ground clearance, vehicle width and brake cooling.

- When replacing wheels, use original equipment manufacturer's wheels or equivalent available from your Ford dealer with equivalent capacity, width, offset and mounting configuration as those originally installed on your vehicle.
- When changing tires, remove the wheel and tire assembly from the vehicle. Changing tires with the wheel on the vehicle is hazardous, more difficult, and takes more time.
- In servicing all tires, use caution not to drop them (or the wheels or assemblies) on your feet, hands or body, or heavily on the floor.

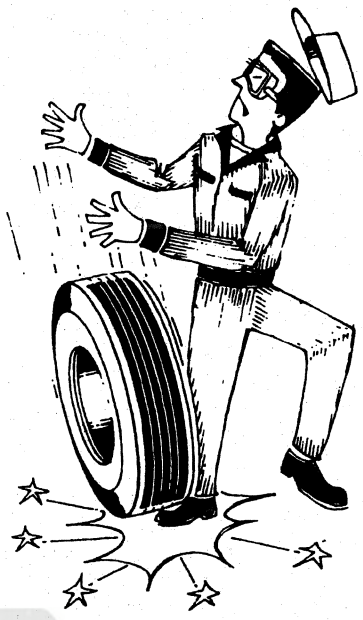

HANDLE WHEELS AND TIRES SAFELY

F1857-C

Official Licensed Product

- Practice good methods of lifting; use your legs as well as your arms and your body. This will help to prevent painful internal injury.
- When carrying tires or wheels, do not step in oil or grease. Keep the floor clean and dry.
- When deflating a tire, reduce the pressure as much as you possibly can by pushing the valve core plunger. Only then should you remove the valve core. Keep your eyes away from the valve.

DEFLATE TIRES SAFELY

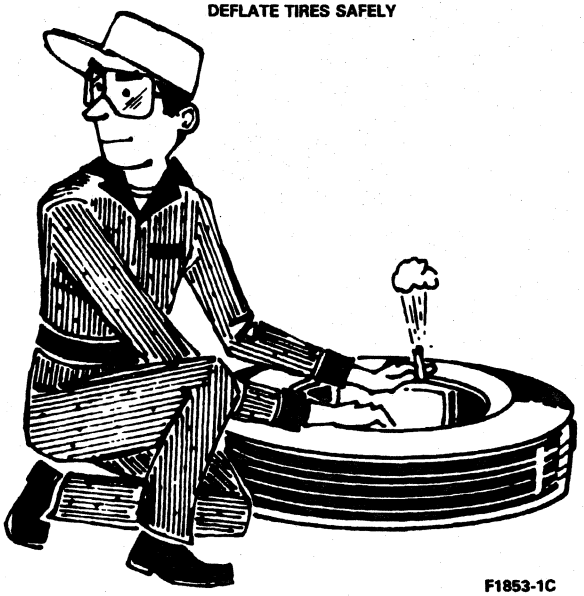

F1853-1C

DESCRIPTION AND OPERATION (Continued)

- Use only standard tire mounting tools and equipment. The use of makeshift tools, screwdrivers or pliers to force tires on or off rims or wheels is dangerous. This can help prevent cuts and will make it unnecessary to use a mallet for unseating the tire beads.
- Always lubricate tire beads to ensure sealing on rim with Rubber Lubricant D9AZ-19583-A or equivalent that meets Ford specification ESR-M99B135-A.
- The Rotunda Deluxe Tire Changer 104-00291 or equivalent includes a bead seater/inflator using an automatically adjustable inflation ring, which aids in properly seating the bead for inflation. Also included are shims to allow 16- and 17-inch tires to be mounted. If not adjusted properly, wheels can be damaged. To operate the Rotunda Tire Changer properly, follow its provided instructions.
- Inspect tire and perform necessary service. A Rotunda Tire Spreader 104-00111 is very helpful, but use care when working around it. Keep the spreader arms closed when the machine is idle.

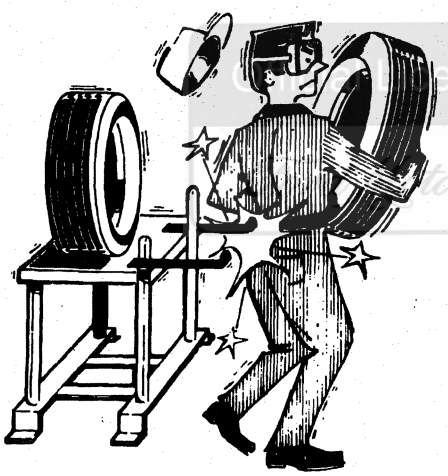

USE CAUTION NEAR TIRE SPREADERS

F1860-D

- Inspect and replace damaged or corroded parts. Abuse during road operations or in mounting tires can cause damage that may weaken the parts. Parts that are excessively corroded are weakened. Always inspect for and replace damaged or heavily rusted parts.
- Inspect and remove light rust and other foreign matter. Accumulation of such material on the engagement surfaces of the rim base and side can prevent the proper fit of these parts. Use of a rust preventative during mounting will minimize rust.
- Tires and rims often require a buffing operation before being mounted once the regular repairs have been made.

CAUTION: Always wear safety goggles or a face shield when performing any buffing operation.

- Avoid hammering rims with steel hammers. Small bits of steel may be broken off the hammer or rim, flying into the eyes, face or body. Always wear safety goggles and use rubber-covered, steel-headed hammers wherever possible. Only rubber mallets should be used on tires, although with modern tire-changing equipment no pounding is necessary.
- Stand as far as possible from the valve stem while inflating tires. Avoid a position where the face or body is immediately over the work being done on any tire in which there is pressure.
- Always use a safety cage, such as Rotunda Inflation Chamber 104-00104 or equivalent, or portable safety device, while inflating tires. Protect yourself from possible improper assembly, inadvertently mismatched parts and other assembly errors.
- Use only accurate, tested gauges to ensure proper air pressure as specified on the Vehicle Certification Label attached to the vehicle. Check all gauges regularly with a master gauge.
- Do not exceed the recommendations of load rating capacity specified on the vehicle safety certification decal (located on door pillar) relative to front and rear GAWR and vehicle GVWR.
- A jack is provided for wheel and tire maintenance only. Never run the engine when the vehicle is supported by a jack.

Hub and Rotor, Four-Wheel Disc Brake

The hub and rotor assembly for the F-Super Duty is designed as a two-piece assembly so it can be replaced as individual components or as an assembly. The front and rear brake rotors are the same and are attached to either the front or rear wheel hub (1104) with 10 screw and washer assemblies tightened to 170-230 N·m (126-170 lb-ft).

Remove the front disc brake hub and rotor (1102). Refer to Section 06-03.

For vehicles with two-piece hub and rotor assemblies, remove and install the lug bolts (1107). Refer to Section 04-01A or Section 04-01B.

Vehicle, New, Break-In

Caster, camber, and toe adjustment are preset at the assembly plant. Alignment adjustments are performed only if needed when determined by a road test.

DIAGNOSIS AND TESTING

Inspection and Verification

Wheel and Tire Checking Procedure

1. Verify the operator's original concern regarding the tires to duplicate the condition.
2. NOTE: Tires that show irregularities and definite roughness must be replaced.

   Inspect to determine if the following conditions apply.

VISUAL INSPECTION CHART

Mechanical
• Incorrect mounting • Misalignment • Loose wheel bearings • Bent wheels • Cupping or scalloping of tires from imbalance • Possible loose or worn steering connecting rod, drag link and pitman arm • Underinflation or mechanical irregularities such as out-of-balance condition of wheel or tire and bent or damaged wheel • Loose, damaged or worn front suspension parts

Tire Wear Diagnosis

Original equipment tires have built-in tread wear indicators to show when tires need replacement. These indicators will appear as 12.7-mm (1/2-inch) wide bands when the tire tread depth becomes 1.58 mm (1/16 inch). When the indicators appear in two or more adjacent grooves, at three locations around the tire, or when cord or fabric is exposed, tire replacement due to tread wear is necessary.

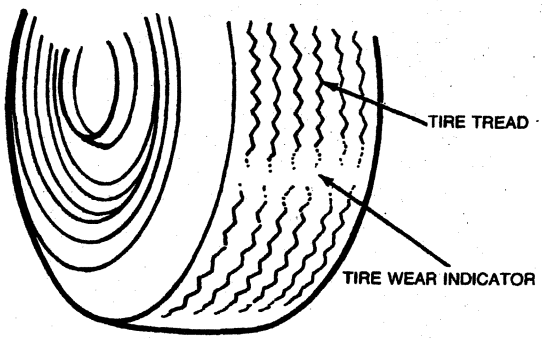

F2890-C

Tire and Wheel Runout

Excessive radial and lateral runout of a wheel and tire assembly can cause roughness, vibration, wheel tramp, tire wear, and steering wheel tremor.

Before checking runout and to avoid false readings caused by temporary flat spots in the tires, check runout only after the vehicle has been driven far enough to warm tires.

The extent of the runout is measured with Rotunda Radial Runout Gauge 007-0056A or equivalent. All measurements are made on the vehicle with the tires inflated to recommended inflation pressures and with the front wheel bearings adjusted to specifications.

Tire Runout

Using Rotunda Radial Runout Gauge 007-0056A or equivalent, measure radial runout of the tire at the center and outside ribs of the tread face. Mark the high points of radial runout for future reference. On tires, radial runout should not exceed 1.27 mm (0.050 inch).

Wheel Runout

Measure radial and lateral wheel runout at the positions shown in the following illustration. Runout should not exceed 1.143 mm (0.045 inch) in either position.

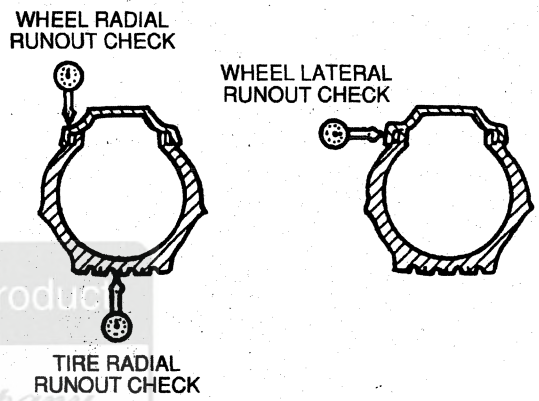

F3347-C

Wheel Bolt Runout

Wheel hub bolt runout can affect wheel runout. When measuring the runout on the lug bolts (1107), the feeler will not be in contact with the lug bolts at all times. Only the measurements taken at the high point of contact of each lug bolt should be considered.

1. Using a broad point indicator, locate the feeler perpendicular to the lug bolt, as close to the flange face as possible. Zero the indicator so the pointer can deflect either way, making sure an accurate reading is made at the lowest as well as the highest contact point.

WHEEL HUB BOLT RUNOUT

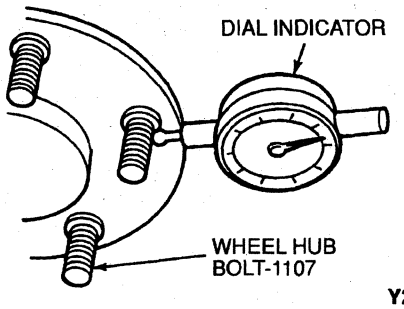

Y2371-C

DIAGNOSIS AND TESTING (Continued)

2. Rotate the shaft until the next lug bolt is contacted. Again, record and continue until you have one reading for each point of contact (each lug bolt). The absolute difference between the maximum and minimum contact reading will be the total indicator reading (or total runout). Wheel hub bolt circle runout should not exceed 0.41 mm (0.016 inch) total indicated runout (TIR).

Match Mounting Tires

Match mounting is a technique used to reduce radial runout and tire spring rate on tire and wheel assemblies. Excessive runout is a source of ride complaints and match mounting can be used to minimize the runout. There are two ways to use match mounting: positioning the tire on the wheel and positioning the wheel on the hub.

1. Measure the total indicated runout on the center of the tire tread rib, and record it. Mark the tire and rim at the center of the tread rib, and record the reading. Mark the tire at the location of the valve stem for reference.
2. Break down the tire and remount it 180 degrees on the rim so the valve stem reference mark is opposite the valve stem on the wheel.
3. Reinflate the tire and measure the total indicated runout, and again mark the high spot.
4. If the runout is reduced to acceptable guidelines (not to exceed 1.27 mm [0.050 inch]), the tire is ready to be put back into service. If the runout is still excessive, one of the following steps must be performed:
   - If the high spot is within 100 mm (4 inches) of the first high spot on the wheel, the wheel may be out of tolerance. Check the wheel for runout.
   - If the high spot is within 100 mm (4 inches) of the first high spot on the tire, and is still outside of guidelines, replace the tire.
   - If the high spot is not within 100 mm (4 inches) of either original high spot of the tire and rim, then draw an arrow from the second high spot to the first high spot (in the shortest direction) and rotate the tire on the rim 90 degrees in that direction. This will normally reduce the runout to an acceptable level.

In the majority of cases, the first 180-degree turn of the tire will either fix the problem or indicate which item to replace.

Road Test

NOTE: A complete road test procedure is provided in Section 00-04.

A tire vibration diagnostic procedure always begins with a road test. The road test and customer interview (if available) will provide much of the information needed to find the source of a vibration.

During the road test, drive the vehicle on a road that is smooth and free of undulations. If vibration is apparent, note and record the following:

- the speed at which the vibration occurs
- what type of vibration occurs in each speed range — mechanical or audible
- how the vibration is affected by changes in vehicle speed, engine speed, and engine torque
- type of vibration sensitivity — torque sensitive, vehicle speed sensitive, or engine speed sensitive

Use the following explanation of terms to help isolate the source of the vibration.

Torque Sensitive

The condition can be improved or worsened by accelerating, decelerating, coasting or maintaining a steady vehicle speed and application of engine torque.

Vehicle Speed Sensitive

The vibration always occurs at the same vehicle speed and is not affected by engine torque, engine speed or gear selection.

Engine Speed Sensitive

The vibration occurs at varying vehicle speeds when a different gear is selected. It can sometimes be isolated by increasing or decreasing engine speed with the transmission in NEUTRAL, or by stall testing with the transmission in gear. If the condition is engine-speed sensitive, the condition is not related to tires.

If the road test indicates that there is tire whine, but no shake or vibration, the noise originates with the contact between the tire and the road surface.

A thumping noise usually means that the tire has flat or soft spots making a noise as they slap the roadway. Tire whine can be distinguished from axle noise because axle noise diminishes or changes according to load or speed. Tire noise remains the same over a range of speeds.

CAUTION: Be sure to deflate tires to their proper pressures after the following check is completed.

To verify that tire noise is not associated with shake or vibration, inflate the tires one at a time to 345 kPa (50 psi) and check for a change in the sound. The pitch or whine will change as the increased pressure changes the tire frequency.

DIAGNOSIS AND TESTING (Continued)

Symptom Chart

WHEELS AND TIRES

Condition	Possible Source	Action
• Tires Show Excess Wear on Edge of Tread	• Underinflated tires. • Vehicle overloaded. • High-speed cornering. • Incorrect toe setting.	• ADJUST air pressure in tires. • CORRECT as required. • CORRECT as required. • SET toe to specification. REFER to Section 04-00.
• Tires Show Excess Wear in Center of Tread	• Tires overinflated.	• ADJUST air pressure in tires.
• Other Excessive Tire Wear Problems	• Improper tire pressure. • Incorrect tire / wheel usage. • Loose or leaking shock absorbers. • Front end out of alignment. • Front wheel bearings out of adjustment. • Loose, worn or damaged suspension components, bushings and ball joints. • Wheel and tire assembly out of balance. • Excessive lateral or radial runout of wheel or tire. • Tires need rotating.	• ADJUST air pressure in tires. • INSTALL correct tire and wheel combination. • TIGHTEN or REPLACE as necessary. REFER to Section 04-01A or Section 04-01B (front) or Section 04-02 (rear). • ALIGN front end. REFER to Section 04-00. • ADJUST front wheel bearings. • INSPECT, SERVICE or REPLACE as required. • BALANCE wheel and tire assembly. • CHECK, SERVICE or REPLACE as required. USE dial indicator to determine runout. • ROTATE tires.
• Wheel Mounting Is Difficult	• Improper application or mismatched parts, including lug bolts and lug nuts. • Corroded, worn or damaged parts.	• FOLLOW manufacturer's specifications. • CLEAN or REPLACE.
• Wheel Rusted or Corroded	• Poor maintenance.	• KEEP clean and PROTECT with paint.
• Wobble or Shimmy Affecting Wheel Runout	• Damaged wheel (eventually damaged wheel bearings and uneven tire wear).	• INSPECT wheel rims for dents. SERVICE or REPLACE as required.
• Excessive Vehicle Vibration, Rough Steering, or Severe Tire Wear	• Loose or improper attaching parts. • Overloading or unbalanced loads.	• TIGHTEN or REPLACE. • CHECK wheel and tire specifications against work load requirements. RECOMMEND correct tire and wheel. CHECK loading procedure.

Official Ford Product

DIAGNOSIS AND TESTING (Continued)

WHEELS AND TIRES (Continued)

Condition	Possible Source	Action
• Vehicle Vibrations	• Tires / wheel mismatched.	• INSTALL correct tire / wheel combination.
	• Inflation pressure too high or low.	• ADJUST air pressure in tires.
	• Uneven tire wear.	• REFER to Wheel and Tire Checking Procedure in the Diagnosis and Testing portion of this section.
	• Out-of-balance wheel or tire or wheel hub and brake drum assembly.	• DETERMINE the out-of-balance component and BALANCE or REPLACE.
	• Bent or distorted wheel disc from overloading, road impact hazards or improper handling.	• REPLACE wheel. Attempts to straighten wheel can result in fractures in the steel and weakening of the disc or the weld between disc and rim. CHECK loading and operating conditions and shop practices.
	• Out-of-round wheel or tire (excessive radial runout).	• USE a dial indicator to verify runout reading. REPLACE the wheel or tire and CHECK for overloading and unbalanced loads, rugged operating conditions, proper wheel and tire specifications.
	• Improperly seated bead.	• VERIFY correct tire / wheel usage and REMOUNT tire.
	• Excessive wheel or tire lateral runout.	• USE a dial indicator to verify runout reading. REPLACE wheel or tire.
	• Loose wheel mountings — damaged lug bolts, lug nuts, enlarged wheel hub bolt holes, worn or broken wheel hub face or foreign material on mounting surfaces.	• TIGHTEN or REPLACE worn or damaged parts. CLEAN mounting surfaces.
	• Damaged wheel bearings.	• REPLACE worn or damaged bearing sets.
	• Brake rotor imbalance.	• CHECK for uneven brake rotor wear. If present, TURN both brake rotors. CHECK fins for caked mud or debris. If no external causes are evident, brake rotor may have a heavy spot. To confirm, SUBSTITUTE a known good brake rotor or shift brake rotor to other side of vehicle and ROAD TEST again. If heavy spot is indicated, REPLACE brake rotor.
	• Wheel hub bolt runout.	• REPLACE wheel hub or axle shaft.
	• Water in tires.	• REMOVE water.
	• Loose or worn engine or transmission mounts.	• TIGHTEN or REPLACE.
	• Improper pinion angle.	• REALIGN assembly to specifications. If damaged, REPLACE pinion and ring gear as a set.
	• Improper front end alignment.	• ALIGN front end.
	• Loose or worn driveline or suspension parts.	• IDENTIFY location of vibration carefully as it may be transmitted through frame making a rear end vibration appear to come from the front. SERVICE or REPLACE loose and worn parts.
	• Excessive driveshaft runout or imbalance.	• BALANCE or REPLACE driveshaft as necessary.
	• Worn or damaged U-joints.	• REPLACE worn U-joints.
• Dual Tires Rubbing	• Insufficient wheel spacing.	• CHECK tire and wheel sizes. Make certain proper size tires and wheels are used.
	• Overloading.	• REDUCE weight.
	• Underinflation.	• INFLATE tires to specifications.

Official Ford Product
Ford Motor Company

DIAGNOSIS AND TESTING (Continued)

WHEELS AND TIRES (Continued)

Condition	Possible Source	Action
• Damaged Wheel Hub Bolt Threads	• Sliding wheel across lug bolts during assembly.	• REPLACE lug bolts. FOLLOW proper wheel installation procedure.
• Loose Brake Drum	• Lug bolt too long.	• REPLACE lug bolt with proper length lug bolt.
• Loose Inner Wheel	• Excessive wheel hub bolt standout from mounting face of wheel hub permitting lug nut to bottom out.	• REPLACE lug bolt with proper length lug bolt.
• Broken Lug Bolts	• Loose lug nuts. • Overloading.	• REPLACE lug bolts. FOLLOW proper torque procedure. • REPLACE lug bolts. COMPARE actual load against vehicle load ratings.
• Stripping Threads	• Excessive torque.	• REPLACE lug bolts. FOLLOW proper torque procedure.
• Rust Streaks from Wheel Hub Bolt Holes	• Loose lug nuts.	• CHECK complete assembly. REPLACE damaged parts. FOLLOW proper torque procedure.
• Damaged Lug Nuts	• Loose wheel assembly. • Overtightened lug nuts.	• REPLACE lug nuts. FOLLOW proper torque procedure.
• Frozen Lug Nuts	• Corrosion or galling.	• **CAUTION: Do not permit lubricant to get on cone seats of wheel hub bolt holes or on cone angle of lug nuts.** If corrosion is slight, CLEAN away corrosion with a wire brush. If corrosion is excessive, REPLACE lug bolts and lug nuts. If condition persists, LUBRICATE first three threads of each lug bolt with a graphite-based lubricant.

Official Licensed Product
Ford Motor Company

REMOVAL AND INSTALLATION

Wheel and Tire

- F-250 Heavy Duty steel wheels use conventional 9/16-18 lug nuts (1012).
- F-250 Heavy Duty aluminum wheels use conventional 9/16-18 lug nuts.
- F-350 single rear wheels use conventional 9/16-18 lug nuts.
- F-350 and F-Super Duty dual rear wheels use flat (integral two-piece swiveling) 9/16-18 lug nuts; conventional NOT permitted.

Removal

1. **CAUTION: Do not use heat to loosen a frozen lug nut. Heat can shorten the life of the wheel and damage the wheel bearings.**
   Remove wheel cover (1130) or ornament. Loosen, but do not remove the wheel hub bolt nuts.
2. Raise vehicle until tire clears floor.
3. Remove lug nuts and pull wheel off brake drum (1126) or front or rear disc brake hub and rotor.

Installation

1. **WARNING: WHEN A WHEEL IS INSTALLED, ALWAYS REMOVE ANY CORROSION, DIRT OR FOREIGN MATERIAL PRESENT ON THE MOUNTING SURFACES OF THE WHEEL OR THE SURFACE OF THE WHEEL HUB (1104), BRAKE DRUM OR BRAKE ROTOR THAT CONTACTS THE WHEEL. INSTALLING WHEELS WITHOUT PROPER METAL-TO-METAL CONTACT AT THE WHEEL MOUNTING SURFACES CAN CAUSE THE LUG NUTS TO LOOSEN AND THE WHEEL TO COME OFF WHILE THE VEHICLE IS IN MOTION, CAUSING LOSS OF CONTROL.**
   Clean dirt from wheel hub mounting surface.
2. Place wheel on brake drum or front or rear disc brake hub and rotor and tighten lug nuts alternately.
3. NOTE: Replacement lug nuts must be the same type and size as original equipment.
   Lower vehicle and evenly tighten lug nuts to 170-230 N·m (126-170 lb-ft), following the torque sequence shown in the appropriate wheel replacement procedure in this section.

REMOVAL AND INSTALLATION (Continued)

4. Replace ornament.

Wheel Installation

WARNING: WHEN A WHEEL IS INSTALLED, ALWAYS REMOVE ANY CORROSION, DIRT OR FOREIGN MATERIAL PRESENT ON THE MOUNTING SURFACES OF THE WHEEL OR THE SURFACE OF THE WHEEL HUB (1104), BRAKE DRUM (1126) OR BRAKE ROTOR THAT CONTACTS THE WHEEL. INSTALLING WHEELS WITHOUT PROPER METAL-TO-METAL CONTACT AT THE WHEEL MOUNTING SURFACES CAN CAUSE THE LUG NUTS (1012) TO LOOSEN AND THE WHEEL TO COME OFF WHILE THE VEHICLE IS IN MOTION, CAUSING LOSS OF CONTROL.

Tire

Precautions

CAUTION: Do not use hand tools or tire irons alone to change tires as this can cause damage to tire beads or wheel rims.

Aluminum wheel rim bead seats should be cleaned with a non-abrasive cleaner to remove tire mounting lubricants and old rubber. Before mounting or dismounting a tire, the bead area should be well lubricated with a ready-to-use liquid soap that meets Ford specification ESR-M99B135-A.

After mounting, inflate the tire so its beads are completely sealed. Install the valve core and inflate the tire to the proper pressure.

Replacement

Follow the instructions provided with the Rotunda Deluxe Tire Changer 104-00291 or equivalent.

Tire Service

Punctured tires should be removed from the wheel and permanently serviced from the inside using a combination service plug and vulcanized patch. When servicing a puncture, always follow the manufacturer's instructions for using the service kit.

WARNING: TIRE SEALANTS THAT ARE INJECTED THROUGH THE VALVE AND CAP ARE NOT TO BE USED TO SERVICE PUNCTURED TIRES AS THEY CAN PRODUCE WHEEL RUST AND CAUSE TIRE IMBALANCE.

Service punctures in the tread area only. Never attempt to service punctures in the tire shoulders or sidewalls. In addition, do not service any tire that has sustained the following damage:

- bulges or blisters
- ply separation
- broken or cracked beads
- fabric cracks or cuts
- tires worn to the fabric, or with wear indicators visible
- punctures larger than 6.35 mm (1/4 inch)

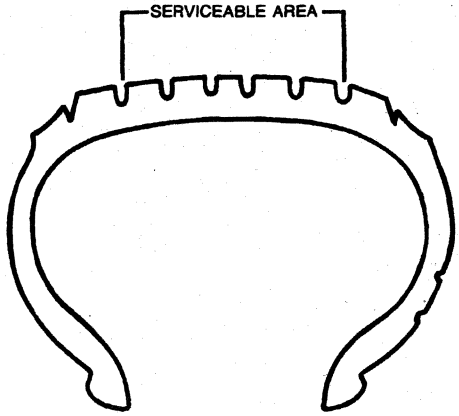

F2891-C

Wheel Covers

Removal

1. Insert the tapered end of a lug wrench between the wheel cover (1130) and wheel.
2. Use a prying or twisting motion to dislodge the wheel cover.

Installation

1. Position the wheel cover over the wheel while allowing the valve stem extension to protrude through the corresponding hole in the wheel cover.
2. Hit the outside edges of the wheel cover with the palm of the hand or a rubber mallet until the wheel cover is fully secured to the wheel.

Wheel Ornaments

Removal

1. Remove retaining screws (if so equipped) and insert the tapered end of a lug wrench between the ornament and wheel.
2. Use a prying or twisting motion to dislodge wheel ornament.

Installation

1. Insert one side of the ornament into the center of the wheel opening.
2. Strike the opposite side of the ornament with the palm of the hand until the ornament is fully seated in the wheel opening.
3. Install retaining screws (if so equipped).

Official Licensed Product

REMOVAL AND INSTALLATION (Continued)

Center Attached Wheel Covers

Removal

1. Insert the tapered end of a lug wrench between the wheel cover (1130) and wheel.
2. Use a prying or twisting motion to dislodge wheel cover.

Installation

1. Insert one side of the wheel cover into the center of the wheel opening.
2. Strike the opposite side of the wheel cover with the palm of the hand until the wheel cover is fully seated in the wheel opening.

Wheel Replacement, Front

Removal

1. **WARNING: AFTERMARKET WHEEL ASSEMBLIES MAY NOT BE COMPATIBLE WITH THE VEHICLE. USE OF INCOMPATIBLE WHEEL ASSEMBLIES MAY RESULT IN EQUIPMENT FAILURE AND POSSIBLE INJURY. USE ONLY APPROVED WHEEL ASSEMBLIES.**

   WARNING: NEVER RUN THE ENGINE WITH ONE WHEEL OFF THE GROUND, FOR INSTANCE, WHEN CHANGING A TIRE. THE WHEEL STILL ON THE GROUND COULD CAUSE THE VEHICLE TO MOVE.

   Set parking brake and block diagonally opposite wheel. On vehicles equipped with an automatic transmission, place selector lever in the PARK position. On vehicles equipped with a manual transmission, place the shift lever in reverse. On 4-wheel drive vehicles, the transfer case must be engaged in gear, not neutral.
2. If so equipped, remove the wheel cover (1130).
3. With the weight of the vehicle still on the tires, loosen the lug nuts (1012). Do not remove at this time.
4. Raise the vehicle until the wheel and tire assembly clears the floor.
5. Remove the lug nuts. Remove the wheel and tire assembly.

Installation

1. **WARNING: WHEN A WHEEL IS INSTALLED, ALWAYS REMOVE ANY CORROSION, DIRT OR FOREIGN MATERIAL PRESENT ON THE MOUNTING SURFACES OF THE WHEEL OR THE SURFACE OF THE WHEEL HUB, BRAKE DRUM OR BRAKE ROTOR THAT CONTACTS THE WHEEL. INSTALLING WHEELS WITHOUT PROPER METAL-TO-METAL CONTACT AT THE WHEEL MOUNTING SURFACES CAN CAUSE THE LUG NUTS TO LOOSEN AND THE WHEEL TO COME OFF WHILE THE VEHICLE IS IN MOTION, CAUSING LOSS OF CONTROL.**

   Position the wheel on the front disc brake hub and rotor (1102).
2. Install the lug nuts. Make sure the cone ends of the lug nut face inward.
3. With the lug nuts loosely installed, turn the wheel until one lug nut is at the top of the wheel hub bolt circle. Tighten the lug nut until snug. In a crisscross type pattern, tighten the remaining lug nuts until snug to minimize runout.
4. Lower the vehicle.
5. Evenly tighten the lug nuts in the torque sequence shown in the illustration. Tighten lug nuts to 170-230 N·m (126-170 lb-ft).

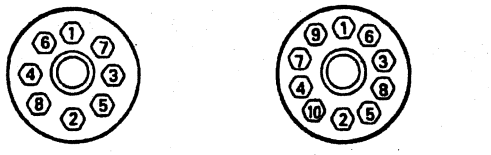

TIGHTEN WHEEL HUB BOLT NUTS IN THIS SEQUENCE DF0062-A

Official Licensed Product Ford Motor Company

REMOVAL AND INSTALLATION (Continued)

Wheel Replacement, Rear

WARNING: AFTERMARKET WHEEL ASSEMBLIES MIGHT NOT BE COMPATIBLE WITH THE VEHICLE. USE OF INCOMPATIBLE WHEEL ASSEMBLIES MIGHT RESULT IN EQUIPMENT FAILURE AND POSSIBLE INJURY. USE ONLY APPROVED WHEEL ASSEMBLIES.

WARNING: USE ONLY INTEGRAL TWO-PIECE SWIVELING LUG NUTS (1012) ON VEHICLES EQUIPPED WITH DUAL REAR WHEELS. DO NOT ATTEMPT TO USE CONE-SHAPED ONE-PIECE LUG NUTS ON THESE VEHICLES. IF USED, CONE-SHAPED ONE-PIECE LUG NUTS CAN COME LOOSE IN VEHICLE OPERATION. DO NOT ATTEMPT TO USE PAST MODEL WHEELS, WHICH HAVE CONE-SHAPED WHEEL HUB BOLT NUT SEATS, ON THIS VEHICLE. DO NOT ATTEMPT TO USE PRESENT DESIGN WHEELS AND LUG NUTS ON PAST MODEL WHEEL HUBS (1104). ATTEMPTED USE OF INTERMIXED WHEELS CAN LEAD TO DAMAGE TO THE WHEEL MOUNTING SYSTEM AND COULD RESULT IN WHEELS COMING LOOSE.

Removal

1. Set parking brake and block diagonally opposite wheel.
   - On vehicles equipped with an automatic transmission, place selector lever in the PARK position.
   - On vehicles equipped with a manual transmission, place the shift lever in reverse.
2. If so equipped, remove the wheel cover (1130).
3. With the weight of the vehicle still on the tires, loosen the lug nuts. Do not remove at this time.
4. Raise the vehicle until the wheel and tire assembly clears the floor.
5. Remove the lug nuts. Remove the wheel and tire assembly from the rear hub (1109).

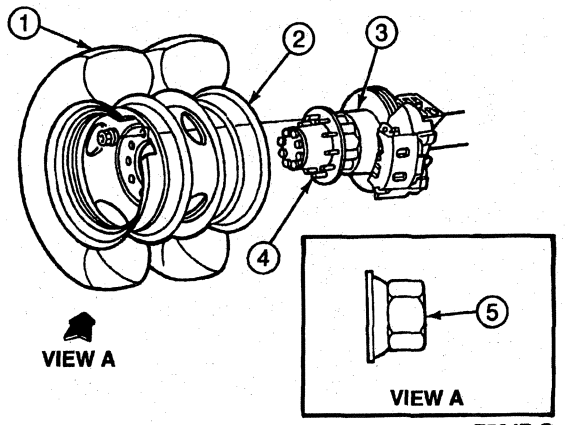

F5647-C

Item	Part Number	Description
1	—	Tire
2	—	Wheel Assy
3	1109	Rear Hub
4	1107	Lug Bolt
5	1012	Lug Nut, Integral Two-Piece Swiveling

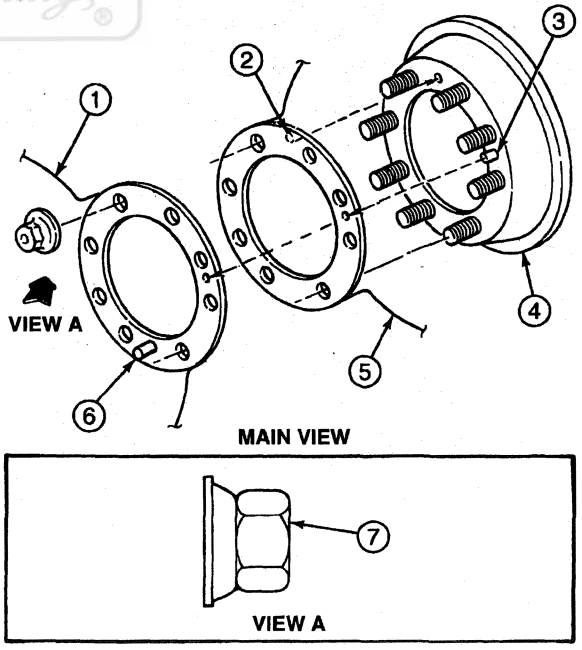

F4253-B

Item	Part Number	Description
1	—	Outside Wheel
2	—	Locating Pin (Part of Wheel)

(Continued)

Official Licensed Product Ford Motor Company

REMOVAL AND INSTALLATION (Continued)

Item	Part Number	Description
3	—	Locating Pin (Part of 1109)
4	1126	Brake Drum
5	—	Inside Wheel
6	—	Locating Pin (Part of Wheel)
7	1012	Lug Nut, Integral Two-Piece Swiveling

Installation

1. **WARNING: WHEN A WHEEL IS INSTALLED, ALWAYS REMOVE ANY CORROSION, DIRT OR FOREIGN MATERIAL THAT MIGHT BE PRESENT ON THE MOUNTING SURFACES OF THE WHEELS OR THE SURFACES OF THE WHEEL HUB, BRAKE DRUM OR BRAKE ROTOR THAT CONTACTS THE WHEEL. INSTALLING WHEELS WITHOUT PROPER METAL-TO-METAL CONTACT AT THE WHEEL MOUNTING SURFACES CAN CAUSE THE LUG NUT TO LOOSEN AND THE WHEEL TO COME OFF WHILE THE VEHICLE IS IN MOTION, CAUSING LOSS OF CONTROL.**

   On vehicles equipped with dual rear wheels, mount the inner wheel on the rear hub with the wheel dish facing inboard.
2. Align the wheel with the small indexing hole, located in the wheel between the wheel hub bolt holes, with the alignment locating pin in the hole in the rear hub. Refer to the previous illustration.
3. Make sure the wheel is flush with the rear wheel hub mounting surface so there is no gap between the rear hub and wheel.
4. On vehicles equipped with dual rear wheels, install the outer rear wheel flush against the inner wheel with the hub alignment locating pin protruding through the wheel index hole.
5. Install and tighten until snug the integral two-piece swiveling lug nuts (nut and washer assembly).
6. With the swiveling lug nuts loosely installed, turn the wheel until one swiveling lug nut is at the top of the wheel hub bolt circle. Tighten the swiveling lug nut until snug. In a criss-cross type pattern, tighten the remaining swiveling lug nuts until snug to minimize runout.
7. Lower the vehicle to the floor.
8. Evenly tighten the swiveling lug nuts in the torque sequence shown in the illustration. Tighten lug nuts to 170-230 N·m (126-170 lb-ft).

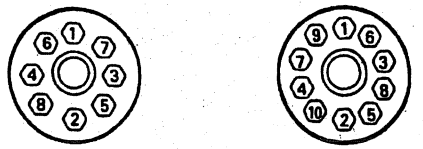

TIGHTEN WHEEL HUB BOLT NUTS IN THIS SEQUENCE DF0062-A

CLEANING AND INSPECTION

Wheels

NOTE: Automatic car wash tire brushes can damage aluminum and styled road wheel protective coatings. Before using such a service, be sure abrasive-type brushes are not being used.

Inspect the lug nuts (1012) and tighten to specification listed at the end of this section. Loose lug nuts can cause shimmy and vibration, and can also distort the wheel hub bolt holes in the wheels.

Make sure wheels and wheel hub (1104) are clean. Stones wedged between the wheel and brake rotor or rear brake drum (1126) or lumps of mud and grease can unbalance the wheel.

Check for wheel damage. Wobble or shimmy caused by a damaged wheel will eventually damage the bearings. Inspect the rims for dents that could leak air.

Inspect the front wheel hub and front wheel bearings whenever the wheel hubs are removed, or at regular inspection intervals.

CAUTION: Do not attempt to repair steel or aluminum wheels that are bent, leak air or show evidence of cracking or other damage. If repairs are made to the wheel, the structural integrity of the wheel can be lost. Replace the wheel if any of the above conditions are present.

Wheel services that use welding, heating or peening are not approved. An inner tube is not acceptable service for leaky wheels or tires.

Steel

Rim bead seats (steel wheels only) should be cleaned with a wire brush or coarse steel wool to remove lubricants, old rubber and light rust.

CLEANING AND INSPECTION (Continued)

Aluminum

CAUTION: Do not use steel wool, abrasive-type cleaner or strong detergents containing high alkaline or caustic agents. Damage can occur to the protective coating and cause discoloration.

Aluminum wheel rim bead seats should be cleaned with a non-abrasive cleaner to remove tire mounting lubricants and old rubber. Before mounting or dismounting a tire, the bead area should be well lubricated with Rubber Lubricant D9AZ-19583-A or equivalent meeting Ford specification ESR-M99B135-A.

Flange Area

Corrosion buildup can result in wheels sticking to the brake drum or front disc brake rotor flange after extensive service. To prevent this from recurring once the wheel and tire assembly is removed, use the following procedure.

1. Clean brake drum or front disc brake rotor flange and wheel bore of corrosion with wire brush, steel wool or other suitable material.
2. Coat wheel bore with Disc Brake Caliper Slide Grease D7AZ-19590-A or equivalent meeting Ford specification ESA-M1C172-A. Do not apply grease to wheel hub bolt nut seats or lug bolts (1107).
3. Install wheel and tire assembly on vehicle and tighten lug nuts to specification listed at end of this section.

Tires

CAUTION: Do not use any caustic solutions or abrasive materials. Do not use steel wool, wire brushes or gasoline, paint thinner or similar materials having a mineral oil base. These materials will damage tires and could eventually discolor the whitewalls and raised letters.

To clean tires, use a mild soap and water solution only, and rinse thoroughly with clear water.

Tire Sizes

It is mandatory to use only the tire sizes recommended on the tire chart attached to the vehicle. Larger or smaller tires can damage the vehicle and affect durability, and may require speedometer recalibration. Make sure wheel size and offsets match those recommended for the tire in use.

Wheel Covers, Wheel Ornamentation

Cleaning

CAUTION: Do not use steel wool, abrasive-type cleaner or strong detergents containing high alkaline or caustic agents. Damage can occur to the protective coating and cause discoloration.

To clean wheels and wheel ornamentation, use a mild soap and water solution, and rinse thoroughly with clear water.

Leaks

CAUTION: Do not attempt to repair aluminum wheels that leak air. If repairs are made to the wheel, the structural integrity of the wheel can be lost. Replace any wheel that leaks air.

Valves

CAUTION: Tire sealants that are injected through the valve stem are not to be used to service punctured tires because they can produce wheel rust and tire imbalance.

Replacement wheels might need to have an air valve installed. If it becomes necessary to replace an air valve, it should be installed using 19 N·m (14 lb-ft) of torque on the hex nut on wheels equipped with brass valves. On wheels equipped with rubber valves, the rubber valve must be fully seated in the hole in the wheel.

TIRE SERVICE AREAS

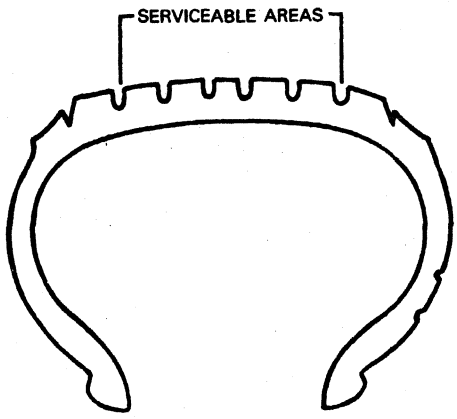

F3344-1B

CLEANING AND INSPECTION (Continued)

Maintenance and Protection in Corrosive Environments

Aluminum wheels have a protective coating to resist corrosion. Care should be taken to avoid damaging the wheel or corrosion may occur. Washing them when washing the rest of the vehicle will be enough to keep wheels looking good for many years (do not use highly alkaline cleaning agents). Certain environments, as created by some operations, can lead to corrosion. Some of these are livestock hauling, snow removal with salt and chloride compounds, and dust control with highly alkaline materials. If corrosion or other damage to the protective coating is found, it is not a recommended practice to refinish the wheel.

Wheel Maintenance

During Tire Inspection

1. Check all metal surfaces thoroughly while making tire inspections, including areas between dual wheels and on inboard side of wheel. Watch for:
   - excessive rust or corrosion buildup
   - cracks in metal
   - bent flanges, resulting from road obstructions
   - loose, missing or damaged lug nuts (1012)
   - bent or stripped lug bolts (1107)
2. **WARNING: EXCESSIVELY CORRODED OR CRACKED RIMS CAN BE DANGEROUS. DEFLATE TIRES PRIOR TO THE REMOVAL FROM THE WHEELS.**

   Remove and replace damaged wheels.
3. Mark damaged or hazardous areas with chalk so that part will be removed from service.
4. Replace parts as required.
5. Inflate tires only to recommended air pressures.
6. Check the lug nut torque and retighten the lug nuts as specified at the end of this section.

During Tire Changes

1. **WARNING: ALLOYS OR METAL SURFACES WITH CRACKS ARE DANGEROUS. THESE COMPONENTS CAN FAIL WITHOUT WARNING DURING INFLATION OR WHILE IN USE ON THE VEHICLE. DESTROY ALL PARTS THAT ARE CRACKED.**

   Check all metal surfaces. Watch particularly for the following items:
   - Cracks in the rim bead seat or drop well radii areas. These are caused by deep rim tool marks, overloading and overinflating tires or using larger than recommended tire sizes.
   - Cracks in the wheel disc, between the wheel hub bolt holes or hand holes. These are caused by loose lug nuts, improper installation procedures, or the use of incorrect sizes or types of attaching parts.
2. **CAUTION: Make sure that replacements are made with the proper sizes and types of wheels.**

   Replace the wheel if cracks are detected.
3. Thoroughly remove rust, dirt and other foreign materials from all surfaces. Bead seat areas of rim should be free of rust and rubber deposits.
4. NOTE: Avoid the use of any lubricant which contains water or solvent that is injurious to rubber, such as WD-40. A combination lubricant and rust-preventive compound is preferable (such as Rubber Lubricant D9AZ-19583-A or equivalent meeting Ford specification ESR-M99B135-A). This protective measure is of particular importance with drop-center tubeless rims as the air in the tire is contained by the tire-side rim surface.

   Lubricate the tire side of the rim base just prior to mounting tire.
5. **WARNING: AFTERMARKET AEROSOL TIRE SEALANTS ARE EXTREMELY FLAMMABLE. ALWAYS QUESTION CUSTOMER TO MAKE SURE THESE PRODUCTS HAVE NOT BEEN USED.**

   CAUTION: When mounting a tire on a wheel, do not inflate to more than 276 kPa (40 psi); then deflate tire.

   NOTE: If the tire is to be reinstalled on the same wheel, mark the tire and wheel so they can be reassembled in the same position. Refer to Tire Service in Removal and Installation, if a puncture or any tire abnormality is detected.

   Inflate tire to recommended air pressure.

Tire Maintenance

To maximize tire performance, inspect for signs of improper inflation and uneven wear, which may indicate a need for balancing, rotation or front suspension alignment. Tires should also be checked frequently for cuts, stone bruises, abrasions, blisters, and for objects that may have become imbedded in the tread. More frequent inspections are recommended when rapid or extreme temperature changes occur, or where road surfaces are rough or occasionally littered with debris.

Tire Inflation

WARNING: OVER- OR UNDERINFLATED TIRES CAN REDUCE TIRE LIFE, ADVERSELY AFFECT VEHICLE HANDLING, AND POSSIBLY LEAD TO A SUDDEN FAILURE THAT COULD RESULT IN THE LOSS OF VEHICLE CONTROL WITHOUT WARNING.

Tire inflation pressure is carefully calculated. Refer to the Vehicle Certification Label for tire pressures. Refer to Section 00-01.

Official Licensed Product Ford Motor Company

CLEANING AND INSPECTION (Continued)

NOTE: The pressure value, located on the tire sidewall, is a maximum value and not necessarily correct for the vehicle.

Refer to the Tire Inflation chart in the Specifications portion of this section. Measure cold tire inflation pressure after the vehicle has been parked for three hours or has been driven less than 5 km (3 miles).

Tire Rotation

To equalize tire wear, tires can be rotated, but not until the cause of unusual or uneven tire wear is determined and corrected. Rotation is recommended first at 8000-12000-km (5,000-7,500-mile) intervals and every 24000 km (15,000 miles) thereafter.

CAUTION: Vehicles with A/S (all season) front and A/T (all terrain) rear tires can only be rotated side to side. Dual rear wheel vehicles should have only the front tires rotated side to side.

NOTE: All season and all terrain tires might show irregular tire wear if tires are not rotated regularly.

NOTE: Typical rotation patterns are shown. Many other rotation patterns are acceptable; however, a single pattern should be used consistently to maximize the tread life of a tire set.

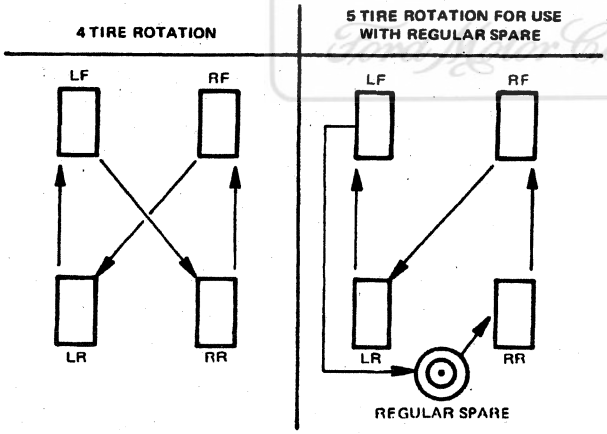

Tread Wear Indicators

The original equipment tires have built-in tread wear indicators to show when tires need replacement. These indicators will appear as 12.7-mm (1/2-inch) wide bands when the tire tread depth becomes 1.58 mm (1/16 inch). When the indicators appear in two or more adjacent grooves, at three locations around the tire, or when cord or fabric is exposed, tire replacement due to tread wear is required.

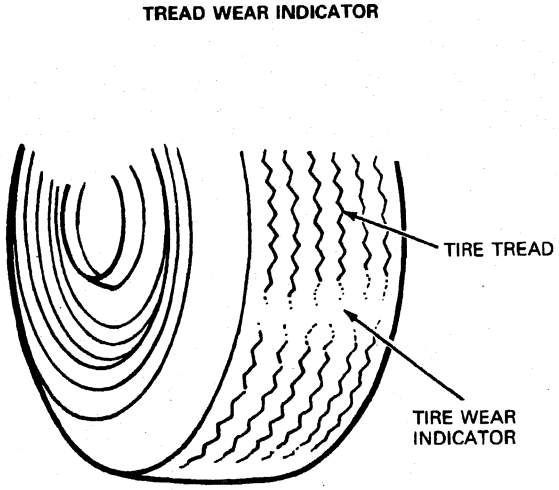

Wheel and Tire Indexing

When servicing wheels or tires, the following procedure for matching the tire and wheel must be followed to make sure that the best possible ride characteristics are maintained.

1. When removing a worn tire from a wheel, mark the valve location on the tire prior to removal.
2. If the original tire is to be remounted, index the valve mark on the tire to the valve of the original wheel. Go to Step 6.

   If a new wheel is being installed, locate the tire matching point based on the valve position on the original wheel relative to its matching point described in the next step.
3. The matching point is at the tire valve. Locate the matching point on the wheel.
4. Locate the matching point on a new tire. Many replacement tires, as well as original equipment tires, are marked for first harmonic matching to the wheel. These marks vary in type and color. Consult the tire dealer for details and mark identification.
5. Mount the tire on the wheel and line up the chartreuse paint mark or sticker on the new tire sidewall or the matching point of the original tire with the tire valve of the wheel.
6. Inflate and balance the tire and wheel assembly.

SPECIFICATIONS

LUBRICANT/ADHESIVE/CLEANER SPECIFICATIONS

Description	Part Number	Ford Specification
Disc Brake Caliper Slide Grease	D7AZ-19590-A	ESA-M1C172-A
Rubber Lubricant	D9AZ-19583-A	ESR-M99B135-A

SPECIFICATIONS (Continued)

TIRE INFLATION

Vehicle	Wheelbase	Gross Vehicle Weight (GVW)	Wheel	Tire	Recommended Cold Inflation Pressure			
					psi		Kilopascal (kPa)	
					Front	Rear	Front	Rear
F-250 Heavy Duty (4x2) RC	3378 mm (133-Inch)	6600 6600 8600 8600	16 x 7K 16 x 7K 16 x 7K	LT215/85R 16D LT235/85R 16E LT235/85R 16E	50 45 50	55 50 80	345 311 345	380 345 552
F-250 Heavy Duty (4x2) SC	3937 mm (155-Inch)	8800	16 x 7K	LT235/85R 16E	50	80	345	552
F-250 Heavy Duty (4x4) RC	3378 mm (133-Inch)	8600	16 x 7K	LT235/85R 16E LT235/85R 16E	55 55	80 80	380 380	552 552
F-250 Heavy Duty (4x4) SC	3937 mm (155-Inch)	8800	16 x 7K	LT235/85R 16E	55	80	380	552
F-350 (4x2) S/R, CHC	3378 mm (133-Inch)	8800	16 x 7K	LT235/85R 16E	50	80	345	552
F-350 (4x4) RC	3378 mm (133-Inch)	9000	16 x 7K	LT235/85R 16E LT235/85R 16E	55 65	80 80	380 448	552 552
F-350 (4x2) Crew Cab	4278 mm (168-Inch)	9200	16 x 7K	LT235/85R 16E	50	80	345	552
F-350 (4x4) CHC	3378 mm (133-Inch)	8800	16 x 7K	LT235/85R 16E LT235/85R 16E	55 65	80 80	380 448	552 552
F-350 (4x4) Crew Cab	4278 mm (168-Inch)	9200	16 x 7K	LT235/85R 16E	60	80	414	552
F-350 (4x2) D/R, RC	3378 mm (133-Inch)	10000	16 x 6K	LT215/85R 16D	65	65	498	448
F-350 (4x2) D/R, SC	3937 mm (155-Inch)	10000	16 x 6K	LT215/85R 16D	65	65	448	448
F-350 (4x2) D/R, SWB, CHC	3475 mm (137-Inch)	10000 11000	16 x 6K 16 x 6K	LT215/85R 16D LT215/85R 16D	65 65	65 65	448 448	448 448
F-350 (4x2) D/R, LWB, CHC	4085 mm (161-Inch)	10000 11000	16 x 6K 16 x 6K	LT215/85R 16D LT215/85R 16D	65 65	65 65	448 448	448 448
F-350 D/R Crew Cab (4x2)	4278 mm (168-Inch)	10000	16 x 6K	LT215/85R 16D	65	65	498	448
F-350 D/R (4x4) CHC	3475 mm (137-Inch)	11000	16 x 6K	LT235/85R 16E LT235/85R 16E	65 65	65 65	448 448	448 448
F-350 D/R (4x4) CHC	4085 mm (161-Inch)	11000	16 x 6K	LT235/85R 16E	65	65	448	448
F-Super Duty D/R, SWB CHC	3480 mm (137-Inch)	15000	16 x 6K	LT235/85R 16E	65	80	448	504
F-Super Duty D/R, LWB CHC	4085 mm (161-Inch) 4694 mm (185-Inch)	15000 15000	16 x 6K[a] 16 x 6K[a]	LT235/85R 16E LT235/85R 16E	65 65	80 80	448 448	504 552
F-Super Duty Motorhome Chassis D/R	4521 mm (178-Inch)	17000	16 x 6K[b]	LT235/85R 16E	80	80	552	552
F-Super Duty Motorhome Chassis D/R	5283 mm (208-Inch)	17000	16 x 6K[b]	LT235/85R 16E	80	80	552	552
F-Super Duty Motorhome Chassis D/R	5791 mm (228-Inch)	17000	16 x 6K[b]	LT235/85R 16E	80	80	552	552

(Continued)

Ford Licensed Products

SPECIFICATIONS (Continued)

TIRE INFLATION (Cont'd)

Vehicle	Wheelbase	Gross Vehicle Weight (GVW)	Wheel	Tire	Recommended Cold Inflation Pressure			
					psi		Kilopascal (kPa)	
					Front	Rear	Front	Rear
F-Super Duty Motorhome Chassis D/R	4521 mm (178-Inch)	15200	16 x 6K[b]	LT215/85R 16E	80	80	552	552

a Requires 2750-lb wheel.
b Requires 3000-lb wheel.

NOTE:

The size and part number or two-character wheel code is stamped or cast on the wheel.

For all tire installations on any vehicle:

- Do not mix tire brands.
- Do not mix radials, bias or bias-belted tires.

TORQUE SPECIFICATIONS

Description	N·m	Lb-Ft
8-Lug Wheel, 9/16-18, F-250 Heavy Duty, F-350	170-230	126-170
10-Lug Wheel, 9/16-18, F-Super Duty	170-230	126-170

NOTE: Torque specifications are for clean, dirt- and paint-free, dry bolt and nut threads. Never use oil or grease on studs or nuts.

SPECIAL SERVICE TOOLS/EQUIPMENT

ROTUNDA EQUIPMENT

Model	Description
007-0056A	Radial Runout Gauge
104-00104	Inflation Chamber

(Continued)

ROTUNDA EQUIPMENT (Cont'd)

Model	Description
104-00111	Tire Spreader
104-00291	Deluxe Tire Changer
164-R3104	Master Key Set

Ford Motor Company Official Licensed Product

GROUP

BRAKE SYSTEM 06

SECTION TITLE	PAGE
BRAKES, FRONT DISC	06-03-1
BRAKE, POWER, HYDRO-BOOST BOOSTER	06-07C-1
BRAKE, POWER, VACUUM PUMP, 7.3L DIESEL ENGINE	06-07B-1
BRAKE, POWER, VACUUM, SINGLE AND TANDEM DIAPHRAGM	06-07A-1
BRAKE SYSTEM, ANTI-LOCK, REAR	06-09-1
BRAKE SYSTEM, HYDRAULIC	06-06-1
BRAKE SYSTEM, PARKING	06-05-1
BRAKE SYSTEM, SERVICE	06-00-1
BRAKES, REAR DISC	06-04-1
BRAKES, REAR DRUM	06-02-1

SECTION 06-00 Brake System, Service

Official Licensed Product
Ford Motor Company

SUBJECT	PAGE
VEHICLE APPLICATION	06-00-2
DESCRIPTION AND OPERATION	
Booster, Hydro-Boost	06-00-4
Booster, Power Brake	06-00-4
Brake Load Sensor Proportioning Valve	06-00-3
Brake Master Cylinder Fluid Control Valve	06-00-3
Brake Master Cylinder, Dual	06-00-2
Brake Pump and Reservoir	06-00-4
Brake System, Anti-Lock	06-00-5
Brake System, Hydraulic	06-00-3
Brake System, Parking	06-00-4
Brakes, Front Disc	06-00-4
Brakes, Rear Disc	06-00-4
Brakes, Rear Drum	06-00-4
DIAGNOSIS AND TESTING	
Brake System	06-00-5
Inspection and Verification	06-00-5
Engine-Drive Pump Belt Check, F-Super Duty	06-00-7
Road Test	06-00-6
Electrical Schematic Reference(s)	06-00-5
Symptom Chart	06-00-8
Component Tests	06-00-22
Brake Booster Functional Test	06-00-22
Brake Master Cylinder	06-00-24
Brake Master Cylinder Fluid Control Valve	06-00-24
Pinpoint Tests	06-00-16
SERVICE PROCEDURES	
Brake Hose	06-00-26
Brake System Pressure Test	06-00-24
Hydraulic Pressure/Flow Test Procedure	06-00-25
Preparation for Hydraulic Pressure/Flow Tests	06-00-24
Brake System Test Procedure	06-00-25
Air Trapped In Brake System	06-00-25
SERVICE PROCEDURES (Cont'd.)	
Brake Pedal Reserve Check	06-00-25
Brake, Power — Function Test	06-00-24
Hydraulic Leak Test	06-00-24
CLEANING AND INSPECTION	
Brake Booster	06-00-27
Brake Thickness	06-00-27
Brakes, Disc	06-00-26
Front	06-00-26
Rear	06-00-26
Brakes, Drum	06-00-26
Hydraulic System	06-00-27
Brake Master Cylinder	06-00-27
Brake Tubing	06-00-27
Parking Brake	06-00-28
Service Precautions	06-00-26
ADJUSTMENTS	
Brake Drum	06-00-33
Refinishing	06-00-33
Service Limits	06-00-34
Brake Fluid Level Check	06-00-31
Brake System Service	06-00-31
Brake Load Sensor Proportioning Valve, F-Super Duty Vehicles (Except Motorhome Chassis)	06-00-28
Brake Pedal	06-00-28
Brake Rotor, Disc	06-00-31
Refinishing	06-00-32
Runout	06-00-32
Service Limits	06-00-33
Brakes, Front — Disc	06-00-31
Brakes, Rear — Disc	06-00-31
Brakes, Rear — Drum	06-00-31
Hydraulic Brake Fluid Color	06-00-31
SPECIFICATIONS	06-00-34
SPECIAL SERVICE TOOLS/EQUIPMENT	06-00-34

VEHICLE APPLICATION

F-250 Heavy Duty, F-350, F-Super Duty Chassis Cab and Motorhome Chassis

DESCRIPTION AND OPERATION

Brake Master Cylinder, Dual

Hydraulic brakes are standard equipment on all vehicles.

Hydraulic rear drum brakes on all F-250 Heavy Duty and F-350 vehicles use automatic rear brake shoe adjusters. Hydraulic disc brakes are used on all front brake systems and on F-Super Duty rear brakes.

The brake master cylinder (2140) contains a double hydraulic cylinder with a transparent plastic brake master cylinder reservoir, fluid level indicator switch, and primary and secondary hydraulic pistons.

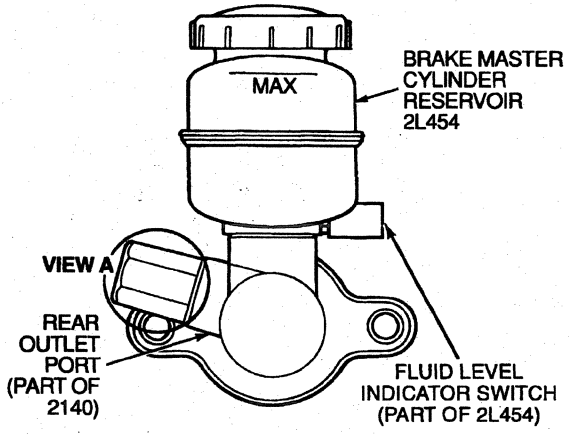

BRAKE MASTER CYLINDER WITH INTEGRAL BRAKE MASTER CYLINDER FLUID CONTROL VALVE FRONT VIEW

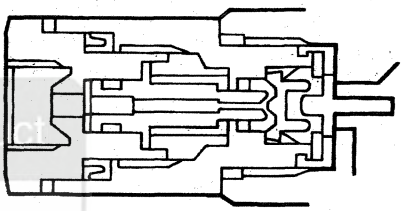

INTEGRAL BRAKE MASTER CYLINDER FLUID CONTROL (PROPORTIONING) VALVE WITH BY-PASS FEATURE VIEW IN CIRCLE A

H5609-F

Official Licensed Product
Ford Motor Company

DESCRIPTION AND OPERATION (Continued)

Brake Master Cylinder Assembly

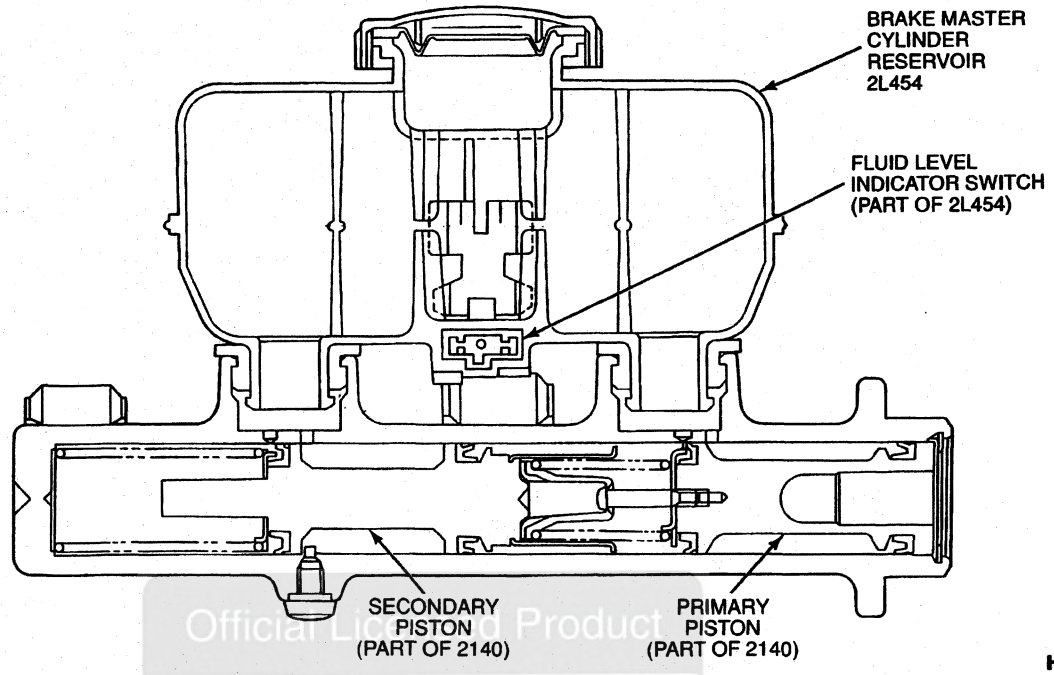

H5613-C

Official Licensed Product
Ford Motor Company

Brake Master Cylinder Fluid Control Valve

A brake master cylinder fluid control valve (2C161), where used, is screwed into the rear outlet port of the brake master cylinder (2140). It proportions pressure to the rear system.

Brake Load Sensor Proportioning Valve

The brake load sensor proportioning valve (2B547) is used on F-Super Duty vehicles.

The brake load sensor proportioning valve is located on the crossmember by the rear axle (4001) and is activated through a linkage system that is connected to the rear axle housing cover (4033).

For more information on the brake load sensor proportioning valve, refer to Section 06-06.

Brake System, Hydraulic

The vehicles are equipped with a pedal-actuated hydraulic dual brake system. The system consists of the following:

- power brake booster
- brake master cylinder with integral fluid control valve
- brake tubes and brake hoses
- primary circuit that feeds the rear brakes
- secondary circuit that feeds the front brakes

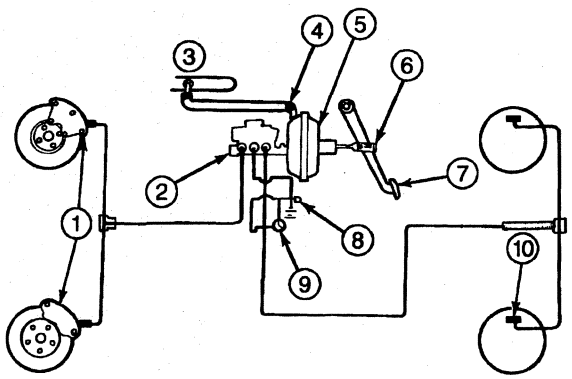

H5612-C

Item	Part Number	Description
1	2B120	Disc Brake Caliper
2	2140	Brake Master Cylinder
3	—	Manifold Vacuum Source

(Continued)

DESCRIPTION AND OPERATION (Continued)

Item	Part Number	Description
4	2365	Power Brake Booster Check Valve
5	2005	Power Brake Booster
6	13480	Stoplight Switch
7	2455	Brake Pedal
8	—	Fluid Level Indicator (Part of 2L454)
9	11572	Ignition Switch
10	2261	Rear Wheel Cylinder

Booster, Hydro-Boost

Hydraulic type power brake boosters (2005) have the potential to provide greater boost. They are especially effective on diesel-powered vehicles and vehicles that need extra boost to handle the demands of 4-wheel disc brakes. The higher boost capability of the hydraulic power brake booster produces a different pedal feel than the vacuum type power brake booster.

A hydraulic boost system gets its boost from pressure developed by the power steering pump (3A674).

The power steering pump provides the fluid pressure to operate both the Hydro-Boost power brake booster and the steering gear (3504).

A Hydro-Boost reserve system (compressed gas accumulator) stores sufficient pressure to provide at least two power-assisted brake applications in the event the power steering pump fluid flow is interrupted.

The brakes also can be applied manually if the reserve system is depleted.

Booster, Power Brake

A vacuum-type power brake booster is a partially sealed container. The interior is divided by a diaphragm into two separate chambers — A and B. The brake pedal-to-power brake booster push rod enters on one side, and the brake master cylinder push rod exits on the other. The brake master cylinder push rod is attached to the center of the diaphragm.

There are three valves that control the vacuum in the power brake booster. The power brake booster check valve opens to allow the intake manifold vacuum to evacuate the power brake booster. When it closes, it holds the vacuum in the chambers.

The equalizer valve links the two chambers. When it is open, the vacuum in the chambers can equalize. When it closes, the chambers are separated.

The vacuum bleed valve functions to reduce the amount of vacuum in chamber B when boost is required. Refer to Section 06-07A for more detail on how boost is produced.

Brakes, Front Disc

All vehicles are equipped with front disc brakes. Refer to Section 06-03.

Brakes, Rear Disc

F-Super Duty vehicles are equipped with rear disc brakes. The rear disc brake calipers are the dual piston type and function with little or no difference from the front disc brake system. For more information on the rear disc brakes, refer to Section 06-04.

Brakes, Rear Drum

The rear brakes on F-250 Heavy Duty and F-350 are drum type with internal shoes that expand against the brake drum (1126) when the brakes are applied. The rear drum brakes are of the single-anchor type, mounted to the same anchor, and actuated by one rear wheel cylinder (2261). Refer to Section 06-02.

Licensed Product Ford Motor Company

Brake Pump and Reservoir

The Bendix Hydro-Boost brake booster is a hydraulically operated brake booster powered by the power steering pump. The power steering pump and its integral power steering oil reservoir provide the fluid pressure to operate both the power brake booster (2005) and the power steering gear.

Brake System, Parking

On F-250 Heavy Duty and F-350, each rear wheel brake assembly contains a cable-actuated parking brake assembly. F-250 Heavy Duty and F-350 use a release handle, which is built into the parking brake control (2780).

A transmission-mounted, manually operated parking brake is used on F-Super Duty vehicles.

The parking brake is mounted to the transmission extension housing and incorporates a case assembly and a cable-actuated 9x3-inch Bendix brake assembly.

For more information on the parking brake system, refer to Section 06-05.

DESCRIPTION AND OPERATION (Continued)

Brake System, Anti-Lock

The rear anti-lock brake system (RABS) is used on F-250 Heavy Duty and F-350 vehicles. The system consists of an anti-lock electronic control module (2C018), RABS valve, rear axle speed sensor and speed sensor ring. F-Super Duty vehicles are equipped with a speed sensor and speed sensor ring that are used for vehicle speed information. F-Super Duty vehicles are not equipped with the RABS system. For system diagnosis and testing, refer to Section 06-09.

DIAGNOSIS AND TESTING

Electrical Schematic Reference(s)

Refer to Electrical and Vacuum Troubleshooting Manual, Cell 42, Rear Anti-Lock Brakes (RABS) for schematic and connector information.

Refer to Electrical and Vacuum Troubleshooting Manual, Cell 60, Instrument Cluster for schematic and connector information.

Brake System

Inspection and Verification

NOTE: Occasional brake squeal can be caused by environmental conditions such as cold ambient temperatures, heat, rain, snow, salt, mud, hot ambient temperatures or high humidity. This occasional squeal is not a functional problem and does not indicate any loss in brake effectiveness.

Verify the vehicle owner's complaint by performing the following inspection procedures.

1. Look for leaks. Clean the unit and remove the brake master cylinder filler cap (2162). Check the fluid level. Check the condition of the cap gasket.
2. With the engine (6007) running, apply 667 N (150 lb) force to the brake pedal (2455) and hold for ten seconds. If brake pedal height cannot be maintained for 10 seconds or the brake warning light comes on, service is required.
3. Visually examine front and rear tires and wheel assemblies for wear or damage such as uneven wear, tread washouts or sidewall damage. Make sure the tires are of the same size, type and, where possible, same manufacturer. Any tire or wheel (1007) that is damaged should be replaced. Refer to Section 04-04.
4. Wheels and tires must be cleared of any foreign matter, and tire pressures adjusted to the correct specifications listed in Section 04-04.
5. If tires exhibit uneven wear or feathering, the cause must be corrected. Check steering and suspension components for damage or wear and, if necessary, check and adjust steering alignment. Refer to Section 04-00.
6. Check hydraulic hoses and tubes for leaks, cracks, chafing and distortions. The fasteners that hold these components in place must also be checked.
7. NOTE: Do not pry under or otherwise disturb the dust boot. This can destroy a very important seal. If there is leakage, it will find its way around the dust boot.

   With the brake drum (1126) removed, check for loose or worn parts. Check the rear wheel cylinder (2261) for leakage around the dust boot.
8. Check for proper installation, leakage, caliper slide lubrication and excessive wear along caliper supports.
9. Test the instrument cluster warning light.
   a. Apply the parking brake.
   b. Check that the light comes on when you start the engine.
   c. Release the hand brake. Check that the warning light goes off.
10. Check that the link from the brake load sensor proportioning valve (2B547) to the frame (5005) is properly connected. The brake load sensor proportioning valve is calibrated for the particular vehicle it is installed on. If modifications are made to the rear suspension system on that vehicle, the brake load sensor proportioning valve will not work properly and must be deactivated.
11. Isolate ABS.
    a. Many concerns that seem at first to be ABS-related are actually problems with the base brake system. To disable the RABS, pull the brake fluid level sensor connector and fasten it safely out of the way.
    b. Road test the vehicle. With RABS disabled, you will get a good feel for the functioning of the base brake system and any concerns. Fix these concerns before testing the ABS itself. This procedure will demonstrate the vehicle's deceleration before lockup and will help evaluate the vehicle's braking performance after correcting all concerns. Use one of the deceleration tests referred to earlier for accurate measurement of the deceleration rate.
    c. With the RABS disconnected, test for brake imbalance. Apply pressure quickly to detect one wheel locking up before the other. With RABS functioning, this judgment cannot be made.
    d. Reactivate the RABS to check for pedal pulsation. Remember that the RABS shuts off below approximately 8 km/h (5 mph), which can result in lockup at the conclusion of a stop. Operate vehicle safely to reach speed when testing.

Official Licensed Product
Ford Motor Company

DIAGNOSIS AND TESTING (Continued)

12. To check for premature RABS activation, thoroughly check the base brake system. If the base brake system checks out and there is still premature RABS activation, there are several areas to take a close look at:
    a. A weak sensor signal: Look for a bad wheel speed sensor, chips on the pole piece or an air gap that's too high.
    b. A wiring problem: Look for chafed wires that might be causing a faulty electrical circuit.
    c. A rear axle problem: Rear axle malfunctions account for many premature RABS activation problems. Look for rear axle speed sensor ring damage and for play in the differential that allows the rear axle speed sensor ring to move away from the wheel speed sensor.

Road Test

A road test should be performed to compare actual vehicle braking performance with the performance standards expected by the driver. The ability of the test driver to make valid comparisons and detect performance deficiencies will depend on experience.

The driver should have a thorough knowledge of brake system operation and accepted general performance guidelines in order to make good comparisons and detect performance problems.

An experienced brake technician will always establish a route that will be used for all brake diagnosis road tests. The road selected will be reasonably smooth and level. Gravel or bumpy roads are not suitable because the surface does not allow the tires to grip the road equally. Crowned roads should be avoided because of the large amount of weight shifted to the low set of wheels on this type of road. Once the route is established and consistently used, the road surface variable can be eliminated from the test results.

The road test should begin with a general brake performance check. With the customer's description as a guide, the brake system should be tested at different vehicle speeds using both light and heavy brake pedal pressure. To determine if the problem is in the front or rear braking system, the service brake pedal is used first, then the parking brake. If the condition (i.e., pull, vibration, pulsation) occurs only with the parking brake, the problem is in the rear system. If the condition occurs when the service brake pedal is pressed, the problem is in the front system.

However, other causes such as wheel or suspension problems are not eliminated by this test.

Locking the brakes and sliding the tires should be avoided. Locked brakes and sliding tires do not indicate brake efficiency; a heavily braked and turning wheel will stop the vehicle in less distance than locked brakes. If the concern becomes evident during this check, it should be determined if it fits the description given before the road test. If the concern is not evident, an attempt should be made to duplicate the condition using the information from the description.

If a concern exists, the symptom chart in this section should be used to isolate a specific sub-system and condition description. From this description, a list of possible causes can be used to further narrow the cause to a specific component or condition.

A key factor in evaluating brake concerns is the deceleration rate. This varies from vehicle to vehicle and with changes in operating conditions. It is evident how well the brakes on a particular vehicle are working after just a few applications.

Stopping Distance Test

Mark out or find a driving lane that is 3.7 m (12 ft) wide. Place two markers along this lane, 7.5 m (25 ft) apart. At a speed of 32 km/h (20 mph), drive down the center of the lane and apply the service brakes when you reach the first marker. Observe whether the vehicle comes to a smooth stop before the second marker. Also note whether it pulled to the right or left and whether it went beyond the 3.7 m (12 ft) width. A commonly accepted standard is a smooth stop within 11 m (35 ft).

Pedal Reserve Test

On vehicles with vacuum power brakes and with the engine running, apply 667 N (150 lb) force and observe the extent of pedal travel. There should be at least 20 percent reserve travel distance available.

NOTE: If the vehicle is equipped with a hydraulic power brake booster (2005), apply normal foot force that is no more than 266 N (60 lb).

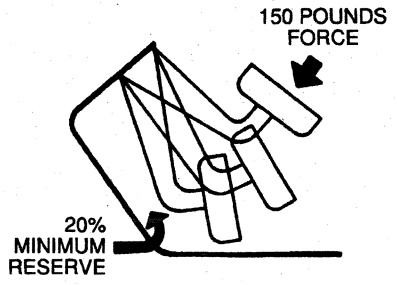

PEDAL TRAVEL AND FEEL

H9826-A

The "Rolling Skid"

The ABS is designed to sense the RAPID deceleration rate of a wheel. This is what warns of possible lockup. Some tires have high peak traction which tends to fall off rapidly. When a tire has this characteristic, the ABS can easily perform as designed. When increasing the braking force, the tires rapidly decelerate, and at the appropriate point, the ABS kicks in at the wheel or axle that needs reduced pressure.

DIAGNOSIS AND TESTING (Continued)

Tires with a tendency to develop peak traction, which then falls off more slowly, might slip some as they decelerate (sometimes referred to as a "rolling skid"). This was a typical characteristic of bias belted tires. This condition can cause the ABS system not to activate because the wheel is not fully locking up. There might, however, be considerable squealing and smoking of the tires, and sometimes even skid marks. This is a concern the customer might report.

Have the customer take you for a drive to demonstrate. Observe how the driver activates the brakes. Before beginning the test, adjust the outside rearview mirrors so you can observe the rear wheels.

Have the owner apply the brakes normally during a hard stop. Ford recommends speeds of no more than 24 km/h (15 mph) for this test. If you feel the ABS activate, rolling skid isn't the concern.

If the ABS doesn't activate, have the driver increase the pressure until brakes squeal and smoke. Hold in this position. Observe rearview mirrors for evidence of smoke. It is also helpful to have an assistant standing nearby who can watch the wheels from a better angle during the test.

Check to see if the wheels continue to rotate for the duration of the stop.

NOTE: Some initial, momentary wheel lockup is permissible during this test.

Finally, see if increasing the pressure even more will cause the ABS to activate. If it does, the vehicle is experiencing the slow drop-off from peak traction discussed above.

This last step, applying extra pressure, is very important to the diagnosis. Many drivers back off on the brakes when they hear the squeal because they think, and understandably so, that a wheel or wheels are locking up. Correcting this concern can mean explaining that the system is functioning correctly and the wheels are not locking up.

When diagnosing RABS concerns on a 4-wheel drive vehicle, remember that the front and rear drivetrains are mechanically locked together in 4-wheel drive. If the front wheels turn, the rear wheels turn. If the front wheels lock up, the rear wheels lock up. The RABS can't prevent lockup in the rear when the front brakes are applied hard enough to cause lockup on low-traction surfaces.

Brake Pedal Feel and Stopping Distance

A combination of conditions indicates whether brakes are working properly: the feel of the brake pedal, how rapidly vehicle slows down and distance travelled before stopping.

Customers often report brake problems in terms of brake pedal feel. "My brakes feel spongy" or "The brake pedal went to the floor" or "The brakes feel hard and I have to apply much more force than usual" are all possible customer complaints. These complaints are often accompanied by reports that the vehicle "Just didn't stop the way it should." These simple complaints can indicate concerns that are much more complex to diagnose and correct.

Stopping Perceptions

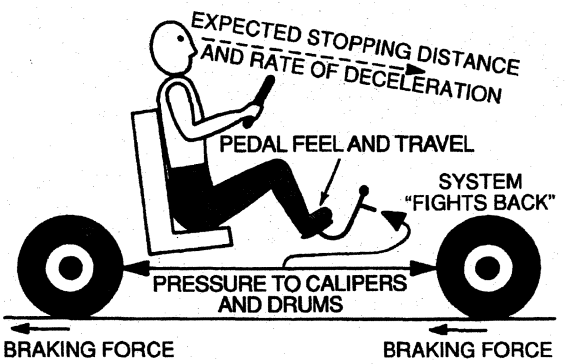

H9827-A

Understanding brake feel and stopping distance is a challenge because different brake systems have a different feel and a different braking response. Feel is the result of several factors, described below.

Design

Brake feel will vary from vehicle to vehicle, even of the same design, depending on how the vehicle is equipped.

Operation

How the vehicle is used can change the feel of the brakes. Factors such as loading, trailer towing and operating on steep grades or gravel roads can all affect the feel of the brakes.

Pedal Force and Travel

The amount of force applied, combined with the amount of brake pedal travel will affect the feel and stopping response. Some drivers are stronger than others and can force the brake pedal down farther.

Spring or Give in the System

A "springiness" in the system that "fights back" against the hydraulic pressure is felt through the brake pedal. The spring can be the result of flex in disc brake calipers (2B120) as force is applied, swelling in flexible hoses under pressure, and extension of shoe return springs. As parts of the system become worn or corroded, the "fighting back" feel can change.

The Vehicle That Keeps Coming Back

If a vehicle has been brought in for brake service frequently, take a close look at the service history. How long did that vehicle go before its first brake service? What has happened since? If components have been replaced, are they the correct parts? Recurring problems can be the result of some mistake made earlier in the service history.

Engine-Drive Pump Belt Check, F-Super Duty

The power steering belt tension is automatically adjusted. Refer to Section 03-05 in the Powertrain, Drivetrain Manual for power steering belt tension inspection.

DIAGNOSIS AND TESTING (Continued)

Symptom Chart

BRAKE SYSTEM DIAGNOSIS

Condition	Possible Source	Action
• Power Brake Booster Chatter, Brake Pedal Vibration	• Slipping drive belt (F-Super Duty).	• TIGHTEN drive belt. REFER to Section 03-05 in the Powertrain, Drivetrain Manual.
	• Worn brake drums.	• SERVICE or REPLACE brake drums.
	• Low fluid level in power steering pump (F-Super Duty).	• FILL power steering pump reservoir. CHECK for external leaks.
• Accumulator Leaks Down; Reserve System Does Not Hold Charge (F-Super Duty)	• Two-function valve is worn or damaged.	• REPLACE power brake booster.
	• Accumulator seal is worn or damaged.	• REPLACE power brake booster.
	• Pneumatic accumulator is worn or damaged.	• REPLACE power brake booster.
• Excessive Pedal Effort Required	• Loose, glazed or broken drive belt (F-Super Duty).	• TIGHTEN or REPLACE drive belt. REFER to Section 03-05 in the Powertrain, Drivetrain Manual.
	• No brake fluid in brake master cylinder reservoir.	• FILL brake master cylinder reservoir and CHECK for external leaks.
	• Leaks in system, power steering right turn pressure hose, power steering left turn pressure hose or power steering return hose (F-Super Duty).	• TIGHTEN connections or REPLACE worn or damaged parts.
	• Leaks at tube fittings and connections.	• TIGHTEN fittings or REPLACE tube seats or O-rings.
	• Leakage at pneumatic accumulator seal (F-Super Duty).	• REPLACE power brake booster.
	• Leakage at piston seal.	• REPLACE power brake booster.
	• Leakage at input seal.	• REPLACE power brake booster.
	• Leakage at cover-to-housing seal.	• REPLACE power brake booster.
	• Leakage at spool plug seal (F-Super Duty).	• REPLACE power brake booster.
	• Leakage at ball plug (F-Super Duty).	• REPLACE power brake booster.
		• GO to Pinpoint Test F for vehicles equipped with vacuum boost system.
		• GO to Pinpoint Test G for vehicles equipped with Hydro-Boost system.
• Unit Self-Applies (F-Super Duty)	• Restriction in power steering return hose.	• CLEAR or REPLACE power steering return hose.
	• Power steering return hose incorrectly connected.	• CORRECT plumbing.
	• Dump valve worn or damaged.	• REPLACE power brake booster.
• Grabbing Brakes	• Broken spool return spring (F-Super Duty).	• REPLACE power brake booster.
	• Hydro-Boost internal contamination (F-Super Duty).	• FLUSH steering while pumping brake pedal. REFER to Section 11-00.
	• Damp brake shoe and linings.	• REPLACE brake shoe and linings. REFER to Section 06-02, Section 06-03 or Section 06-04.
	• Low pump flow (F-Super Duty).	• TIGHTEN drive belt. REFER to Section 03-05 in the Powertrain, Drivetrain Manual.

Official Ford Product

DIAGNOSIS AND TESTING (Continued)

BRAKE SYSTEM DIAGNOSIS (Continued)

Condition	Possible Source	Action
• Brake Warning Indicator Always On	• Low brake fluid level.	• ADD fluid, CHECK for leaks and BLEED system as required.
	• Ignition wiring routed too closely to fluid level indicator assembly.	• REROUTE wiring as required.
	• Damaged float assembly.	• SERVICE or REPLACE as required.
	• Shorted light circuit.	• CORRECT short in warning circuit.
	• Worn or damaged brake fluid level indicator.	• REPLACE brake master cylinder reservoir.
	• Leak in brake system.	• SERVICE leak.
	• Parking brake engaged.	• RELEASE parking brake. REFER to Section 06-05.
		• GO to Pinpoint Test B.
• Excessive / Erratic Pedal Travel, Pedal is Low or Spongy	• Rear brakes out of adjustment.	• ADJUST rear brakes. REFER to Section 06-02.
	• Front wheel bearing out of adjustment.	• CHECK front wheel bearings for wear or damage. ADJUST or REPLACE bearings. REFER to Section 04-01A or Section 05-03C in the Powertrain, Drivetrain Manual.
	• Brake master cylinder or power brake booster dash unit mounting loose.	• TIGHTEN nuts and bolts to specification. REFER to Section 06-06.
	• Front or rear disc brake caliper attachment loose.	• REPLACE or TIGHTEN as required. REFER to Section 06-03 or Section 06-04.
	• Worn or damaged self-adjusters.	• REMOVE brake drum and CHECK rear brake shoe and lining for proper adjustment. REPLACE brake shoe adjusting lever. REFER to Section 06-02.
	• Brake pedal or support improperly mounted.	• SERVICE or REPLACE as necessary. REFER to Section 06-06.
	• Worn or damaged brake linings.	• REPLACE brake shoe and lining. REFER to Section 06-02, Section 06-03 or Section 06-04.
	• Brake drum out-of-round or front or rear disc brake rotors with excessive runout.	• REFINISH or REPLACE if wear exceeds limits. REFER to Section 06-02, Section 06-03 or Section 06-04.
	• Worn or damaged RABS valve accumulator.	• REFER to Section 06-09.
	• Brake tubing improperly positioned.	• CHECK brake tubing for misposition near heat source. Fluid can boil and result in spongy pedal response.
	• Low brake fluid level.	• FILL as required.
	• Clogged brake master cylinder filler cap hole.	• SERVICE or REPLACE brake master cylinder filler cap.
	• Air in system.	• BLEED system.
		• GO to Pinpoint Test C for spongy brake pedal.
• Brake Fluid Loss	• Improperly positioned brake master cylinder filler cap or gasket.	• REPOSITION cap and gasket.
	• Leaking brake master cylinder reservoir grommets.	• REPLACE grommets and brake master cylinder reservoir as required.
	• Hydraulic system leakage.	• GO to Pinpoint Test H for vehicles equipped with Hydro-Boost system.

Official Licensed Product
Ford Motor Company

DIAGNOSIS AND TESTING (Continued)

BRAKE SYSTEM DIAGNOSIS (Continued)

Condition	Possible Source	Action
• Excessive Brake Pedal Effort to Fully Apply Brakes	• Overloaded vehicle.	• LIGHTEN load and ADVISE owner of correct load limits of vehicle.
	• Insufficient vacuum to power brake booster.	• REPLACE damaged or leaking vacuum booster hoses. REFER to Section 06-07A or Section 06-07B.
	• Restricted air filter on power brake booster.	• CLEAN or REPLACE filter.
	• Power brake booster and brake pedal linkage binding caused by worn bushings or corrosion.	• REPLACE worn brake master cylinder push rod bushing or CLEAN and LUBRICATE linkage.
	• Worn or damaged power brake booster.	• REPLACE power brake booster. REFER to Section 06-07A.
	• Brake shoe and lining worn, glazed, contaminated or improper type.	• REPLACE brake shoe and lining in axle sets.
	• Brake shoe and lining improperly installed.	• REPOSITION brake shoes properly and ELIMINATE any binding. REFER to Section 06-02, Section 06-03 or Section 06-04.
	• Seized pistons in rear wheel cylinders or seized disc brake calipers.	• SERVICE or REPLACE as required. REFER to Section 06-02, Section 06-03 or Section 06-04.
	• Restricted brake lines or hoses.	• SERVICE or REPLACE as required.
	• Inoperative brake load sensor proportioning valve (F-Super Duty only).	• CHECK vehicle ride height and control linkage. REFER to Section 06-06.
• Pedal Goes Down Slowly	• External leak.	• SERVICE as required.
	• Internal leak.	• PERFORM brake master cylinder diagnosis test. SERVICE as required.
• Pedal Goes Down Fast	• Hydraulic system.	• PERFORM brake master cylinder diagnosis. SERVICE as required. REFER to Section 06-06.
	• Drum brakes out of adjustment, worn, bad wear pattern or cracked brake drums.	• SERVICE or REPLACE as required. REFER to Section 06-02.
	• Loose or improper attachment of brake pedal, pedal support, power brake booster and brake master cylinder.	• SERVICE or REPLACE as required. REFER to Section 06-06.

Off-Brand Unlicensed Product
Ford Motor Company

DIAGNOSIS AND TESTING (Continued)

BRAKE SYSTEM DIAGNOSIS (Continued)

Condition	Possible Source	Action
• Brakes Pull or Grab	• Unequal air pressure in tires.	• INFLATE tires to correct pressure. REFER to Section 04-04.
	• Grease or fluid on linings. Contaminated linings.	• REPLACE brake shoes and linings. REFER to Section 06-02, Section 06-03 or Section 06-04.
	• Improper size or type of lining on one wheel.	• REPLACE with correct brake shoe and lining in axle sets.
	• Improper size rear wheel cylinder on one wheel.	• REPLACE with correct rear wheel cylinder.
	• Stuck or seized pistons in rear wheel cylinders or seized disc brake calipers.	• RAISE vehicle on hoist. CHECK for movement of piston during application/release of brakes. SERVICE or REPLACE as required. REFER to Section 06-02, Section 06-03 or Section 06-04.
	• Restricted brake lines or hoses.	• SERVICE or REPLACE as required.
	• Insufficient clearance of inner brake shoe.	• Minimum clearance with brake shoe hold-down spring removed 0.25 mm (0.01 in.) side-to-side, 0.71 mm (0.028 in.) end-to-end. SERVICE or REPLACE as required. REFER to Section 06-02, Section 06-03 or Section 06-04 (F-Super Duty only).
	• Front side-to-side torque variations.	• SWAP front disc brake rotors and linings from side-to-side. If pull direction changes REPLACE pads and TAKE light cut off front disc brake rotors. REFER to Section 06-03.
	• Worn or damaged rear brake.	• CHECK for contaminants, broken components, seized parking brake and improperly installed parts. SERVICE or REPLACE as required. REFER to Section 06-02.
	• Incorrectly adjusted rear brake shoe and lining.	• ADJUST rear brake shoe and lining. REFER to Section 06-02.
	• Other brake components. — Improper adjustment of drum brakes. — Improper positioning of disc brake pad and lining in the disc brake caliper. — Improperly adjusted, damaged or worn wheel bearings. — Distorted rear brake shoe and lining. — Worn brake linings. — Missing, broken or stretched retracting or retaining springs and clips.	• INSPECT, ADJUST, SERVICE or REPLACE as required. REFER to applicable Section in Group 06. • GO to Pinpoint Test A.
	• Other components. — Suspension. — Steering. — Tires.	• REFER to the appropriate section in Group 04 or Group 11.
• Brakes Lock Up with Light Pedal Pressure	• RABS Valve: worn or damaged outlet (dump) valve. • Brake load sensor proportioning valve or linkage binding, out of adjustment or worn or damaged.	• REFER to Section 06-09, if one or both wheels lock up. • REFER to Section 06-06, if occurring at light loads. • GO to Pinpoint Test D.

Official Licensed Product
Ford Motor Company

DIAGNOSIS AND TESTING (Continued)

BRAKE SYSTEM DIAGNOSIS (Continued)

Condition	Possible Source	Action
• Brakes Drag, Slow or Incomplete Return	• Parking brake levers binding.	• SERVICE, LUBRICATE or REPLACE parts as required. REFER to Section 06-05.
	• Brake pedal binding.	• SERVICE, LUBRICATE or REPLACE parts as required. GO to Pinpoint Test E.
	• Front wheel bearing out of adjustment.	• CHECK bearings for wear or damage. ADJUST or REPLACE bearings. REFER to Section 04-01A or Section 05-03C in the Powertrain, Drivetrain Manual.
	• Worn or damaged brake master cylinder.	• CHECK brake master cylinder for damage. SERVICE or REPLACE. REFER to Section 06-06.
	• Brakes out of adjustment.	• ADJUST brakes.
	• Restriction in hydraulic system.	• SERVICE or REPLACE as required. REFER to Section 06-06.
	• Seized rear wheel cylinders or disc brake calipers.	• SERVICE or REPLACE as required. REFER to Section 06-02, Section 06-03 or Section 06-04.
	• Stoplight switch out of adjustment.	• CHECK switch installation. REFER to Section 17-01.
	• Lack of lubricant on front disc brake caliper slides.	• LUBRICATE front disc brake caliper slides.
	• Hydraulic power Hydro-Boost system (F-Super Duty and Motorhome) restricted or routed incorrectly.	• SERVICE, REPLACE or REROUTE as required. REFER to Section 06-07C.
	• Brake pedal to bell crank rod adjusted incorrectly (F-Super Duty Motorhome).	• ADJUST rod length. REFER to Section 06-06.
	• Pedal stop and power brake vacuum booster push rod.	• CHECK pedal stop and power brake vacuum booster push rod. ADJUST.
	• Excessive seal friction in power brake booster.	• REPLACE power brake booster. REFER to Section 06-07A.
	• Flared reaction end.	• REPLACE power brake booster.
	• Broken piston return spring.	• REPLACE power brake booster.
	• Restriction in power steering return line hose (F-Super Duty).	• CLEAR or REPLACE power steering return line hose.
	• Power steering return line hose incorrectly connected (F-Super Duty).	• CORRECT plumbing.
	• Broken spool return spring (F-Super Duty).	• REPLACE power brake booster.
• Noise at Wheels When Brakes Are Applied — Snap or Clicks	• Cracked welds at rear brake shoe web.	• REPLACE rear brake shoes and linings. REFER to Section 06-02.
	• Rear brake shoe and lining binding at backing plate ledges.	• CLEAN and LUBRICATE ledges.
	• Machining marks on brake drums.	• REFINISH or REPLACE brake drums.
	• Brake backing plate ledges worn.	• REPLACE brake backing plate and LUBRICATE ledges.
	• On disc brakes — loose or missing anti-rattle clips.	• REPLACE. REFER to Section 06-03 or Section 06-04.
	• Improper finish on brake rotor.	• REFINISH front disc brake rotor.

Official Service Product Ford Motor Company

DIAGNOSIS AND TESTING (Continued)

BRAKE SYSTEM DIAGNOSIS (Continued)

Condition	Possible Source	Action
• Noise at Wheels — Brakes Applied — Squeak or Squeal	• Rear brake shoe and lining or front disc brake rotor surface contamination.	• REMOVE disc brake caliper from front wheel spindle and REMOVE inner and outer linings. HAND SAND the linings and both braking surfaces of rotor using Garnett Paper 100A (medium grit) or equivalent or aluminum oxide 150J (medium) or equivalent. REFER to Section 06-03 or Section 06-04.
	• Improper lining parts.	• INSPECT for correct usage. REPLACE as required. REFER to Section 06-02, Section 06-03 or Section 06-04.
	• Brake drums — damaged or incorrect brake shoe retracting springs, loose or damaged shoe retainer pins, springs and clips, and grooved backing plate ledges.	• INSPECT, SERVICE or REPLACE as required. REFER to Section 06-02.
	• Worn lining indicators.	• INSPECT, REPLACE lining in axle sets.
• Noise at Wheels — Brakes Not Applied — Squeak or Squeal	• Wheel covers improperly attached.	• SEAT the wheel covers. SERVICE flanges or cover. REFER to Section 04-04.
	• Loose lug nuts.	• TIGHTEN to specified torque. REPLACE wheel if stud holes are elongated.
	• Worn, dry or improperly adjusted wheel bearings.	• REPLACE worn or damaged wheel bearings. LUBRICATE and ADJUST. REFER to Section 04-01A or Section 05-03C in the Powertrain, Drivetrain Manual.
	• Bent or warped brake backing plate or rotor shield causing interference with brake drum or front disc brake hub and rotor.	• SERVICE or REPLACE as required. REFER to Section 06-02, Section 06-03 or Section 06-04.
	• Contaminated linings — adjustment too tight (rear brakes).	• REMOVE contamination or REPLACE linings. ADJUST brakes properly.
	• Improper machining of drum, causing interference with backing plate or shoe.	• REFINISH brake drum or FILE off material contacting brake backing plate as needed. REFER to Section 06-02.
	• Other brake system components: — Loose or extra parts in brakes. — Drum brakes — weak, damaged or incorrect retracting springs. — Drum brakes — grooved backing plate ledges. — Improper positioning of pad in disc brake caliper. — Outside diameter of front disc brake rotor rubbing front disc brake caliper housing. — Lack of correct lubricant on disc brake caliper slides and pins. — Improper installation of brake shoe hold-down spring. — Excessive runout of front disc brake rotor.	• INSPECT, SERVICE or REPLACE as required. REFER to Section 06-02, Section 06-03 or Section 06-04.

Official Licensed Product
Ford Motor Company

DIAGNOSIS AND TESTING (Continued)

BRAKE SYSTEM DIAGNOSIS (Continued)

Condition	Possible Source	Action
• Noise at Wheels When Brakes Are Applied — Scrape or Grind (Loud, Harsh Rubbing Noise)	• Contaminated or scored linings or front disc brake rotors.	• REPLACE or TURN front disc brake rotor. REMOVE and REPLACE contaminated lining as required. REFER to Section 06-03 or Section 06-04.
	• Wheel bearings not lubricated. Verify noise is coming from bearings.	• LUBRICATE and REPLACE bearings and seals as required. REFER to Section 04-01A or Section 05-03C in the Powertrain, Drivetrain Manual.
	• Worn brake linings or foreign material between lining and brake drum or front disc brake rotor.	• REPLACE rear brake shoe and lining. REFER to Section 06-02. REFINISH brake drum or front disc brake rotor if excessively scored. REFER to Section 06-03 or Section 06-04.
	• Brake shoe interference with back of brake drum, or shield-to-rotor clearance also binding at backing plate guide ledges.	• INSPECT. REPLACE as required. LUBRICATE guide ledges.
	• Caliper-to-wheel or rotor interference.	• REPLACE as required.
	• Other brake system components: — Warped or bent backing plate or splash shield causing interference with brake drum. — Cracked drums or rotors.	• INSPECT and SERVICE as required. REFER to Section 06-02, Section 06-03 or Section 06-04.
	• Tires rubbing against chassis or body.	• INSPECT and SERVICE as required. REFER to Section 04-04.
	• Rotor-to-spindle interference.	• REPLACE as required. REFER to Section 06-03.
• Noise at Wheels — Brakes Applied — Groan, Roughness or Chatter at Wheel; Harsh Feeling While Braking in Neutral Evidenced by a Pulsating Brake Pedal Feel	• Loose lug nuts.	• TIGHTEN to specified torque. REPLACE wheel if stud holes are elongated. REFER to Section 04-04.
	• Contaminated disc brake rotor or lining surfaces.	• HAND SAND corrosion from disc brake rotor braking surfaces or REPLACE linings. REFER to Section 06-03 or Section 06-04.
	• Worn, damaged, dry or improperly adjusted wheel bearings.	• INSPECT, LUBRICATE or REPLACE as required. REFER to Section 04-01A or Section 05-03C in the Powertrain, Drivetrain Manual.
	• Loose or worn front suspension components.	• INSPECT, SERVICE or REPLACE as required.
	• Disc brake rotor thickness variation.	• REPLACE or TURN disc brake rotor. REFER to Section 06-03 or Section 06-04.
	• Disc brake caliper anchor plate loose or missing parts. Also, loose or bent disc brake rotor shield.	• REPLACE or SERVICE as required. REFER to Section 06-03 or Section 06-04.
	• Rear brake roughness.	• ATTEMPT stopping the vehicle using the parking brake. If roughness is present, CHECK brake drums for excessive wear or runout. REFINISH or REPLACE as required. REFER to Section 06-02.
	• Brake drum cracked or out-of-round.	• REFINISH or REPLACE brake drum as required. REFER to Section 06-02.
	• Wheel/tire imbalance.	• SERVICE as required. REFER to Section 04-04.
	• Drivetrain imbalance.	• ATTEMPT stopping the vehicle in the neutral transmission position. If roughness is gone, drivetrain should be inspected.

Official Ford Motor Company Product

DIAGNOSIS AND TESTING (Continued)

BRAKE SYSTEM DIAGNOSIS (Continued)

Condition	Possible Source	Action
• Noise at Wheels — Brakes Not Applied — Growling, Click, Rattle, Clunk or Knock. Defined by a Series of Sharp, Short Sounds in Quick Succession	• Stones or foreign material trapped inside.	• REMOVE stones or foreign material as required.
	• Loose wheel lug nuts.	• TIGHTEN to specified torque. REPLACE wheel if stud holes are elongated. REFER to Section 04-04.
	• Worn, damaged or dry wheel bearings.	• INSPECT, LUBRICATE or REPLACE. ADJUST bearings properly. REFER to Section 04-01A or Section 05-03C in the Powertrain, Drivetrain Manual.
	• Disc brake caliper loose or missing anti-rattle clips.	• INSPECT, SERVICE or REPLACE as required. REFER to Section 06-03 or Section 06-04.
	• Drum brakes loose or extra parts.	• INSPECT, REMOVE or SERVICE as required. REFER to Section 06-02.
	• Front disc brake rotor shield bent, loose or missing.	• SERVICE as REQUIRED.
	• Loose grease cap.	• SERVICE or REPLACE as required.
	• Drum brakes — rear brake shoe and lining binding at backing plate ledges.	• LUBRICATE ledges.
	• Drum brakes — backing plate ledges worn.	• REPLACE brake backing plate and LUBRICATE ledges.
• Vibration When Brakes Are Applied — Front Brakes	• Loose lug nuts.	• TIGHTEN lug nuts to specification. REPLACE wheel if stud holes are elongated. REFER to Section 04-04.
	• Cracked front disc brake rotor.	• REPLACE front disc brake rotor. REFER to Section 06-03.
	• Front disc brake rotor out of round or improper machining.	• MACHINE front disc brake rotor or REPLACE as required.
	• Excessive front disc brake rotor runout.	• REPLACE front disc brake rotor.
	• Excessive front disc brake rotor thickness variation.	• REPLACE front disc brake rotor.
	• Worn or improperly adjusted wheel bearings.	• ADJUST or REPLACE wheel bearings as required. REFER to the applicable section in Group 05 in the Powertrain, Drivetrain Manual.
	• Loose or worn front suspension components.	• TIGHTEN loose components to specifications. REPLACE worn or damaged components. REFER to Group 04.
	• Excessive radial or lateral runout on wheel and tire assembly.	• ADJUST tire or wheel to eliminate excessive runout or REPLACE tire or wheel as required. REFER to Section 04-04.
• Vibration When Brakes Are Applied — Brake Drums	• Loose lug nuts.	• TIGHTEN lug nuts to specification. REPLACE wheel if stud holes are elongated. REFER to Section 04-04.
	• Cracked brake drum.	• REPLACE DRUMS. REFER to Section 06-02.
	• Brake drum out of round or improperly machined.	• MACHINE drums or REPLACE as required.
	• Excessive radial and lateral runout on wheel and tire assembly.	• ADJUST tires or wheel to eliminate runout or REPLACE wheel and/or tire as required.
• Parking Brake Will Not Hold	• Parking brake cable out of adjustment.	• ADJUST parking brake lever. REFER to Section 06-05.
	• Rear brakes out of adjustment.	• ADJUST rear brake. REFER to Section 06-02.
	• Parking brake linkage, cable, parking brake control, clevis or ratchet binding, worn or damaged.	• SERVICE or REPLACE linkage or parking brake cables as required. REFER to Section 06-05.

Official Licensed Product

DIAGNOSIS AND TESTING (Continued)

BRAKE SYSTEM DIAGNOSIS (Continued)

Condition	Possible Source	Action
• Parking Brake Will Not Release or Fully Return	• Manual release brake control components binding or damaged. • Parking brake linkage and cables binding. • Worn or damaged rear brake components.	• SERVICE or REPLACE manual parking brake control. • SERVICE or REPLACE as required. REFER to Section 06-05. • CHECK brake shoe retracting springs and parking brake levers. SERVICE as required. REFER to Section 06-02.
• Rough Engine Idle or Stall	• Vacuum leak. • Worn or damaged power brake booster.	• CHECK vacuum booster hoses and connections for leaks. SERVICE or REPLACE as required. • CHECK power brake booster for internal leaks. REPLACE if required. REFER to Section 06-06.
• No Vacuum or Low Vacuum	• Loose vacuum pump drive belt. • Vacuum pump is locked up. • No vacuum from pump outlet. • Outlet manifold assembly outlet port. • Damaged or worn vacuum hoses.	• TIGHTEN or REPLACE belt. REFER to Section 03-05. • REPLACE pump. REFER to Section 06-07B. • REPLACE pump. REFER to Section 06-07B. • REPLACE outlet manifold assembly. • REPLACE as necessary.

Official Licensed Product

Pinpoint Tests

PINPOINT TEST A: BRAKES PULL OR GRAB

Test Step		Result	Action to Take
A1	INSPECT TIRE PRESSURE		
	• Measure air pressure in all four tires. • **Is tire pressure within specifications?**	Yes ▶ No ▶	GO to **A2**. ADJUST tire pressure.
A2	CHECK CALIPER AND WHEEL CYLINDER OPERATION		
	• Check the front disc brake caliper pistons, pins or rear wheel cylinders for binding or sticking. • **Do the front disc brake caliper pistons, pins or rear wheel cylinders bind or stick?**	Yes ▶ No ▶	SERVICE or REPLACE components as necessary. GO to **A3**.
A3	INSPECT DISC BRAKE ROTORS AND DRUMS		
	• Inspect the front disc brake rotor and brake drum for excessive runout or damage. • **Does excessive runout or damage exist?**	Yes ▶ No ▶	SERVICE or REPLACE front disc brake rotor or brake drum as necessary. GO to **A4**.
A4	INSPECT WHEEL BEARINGS		
	• Inspect front and rear wheel bearings for excessive end play or improper preload. • **Does excessive end play or improper wheel bearing preload exist?**	Yes ▶ No ▶	ADJUST rear wheel bearing preload or REPLACE wheel bearings. PERFORM a hydraulic leak check. REFER to Pinpoint Test F for vehicles equipped with vacuum boost system. REFER to Pinpoint Test H for vehicles equipped with Hydro-Boost system.

DIAGNOSIS AND TESTING (Continued)

PINPOINT TEST B: BRAKE WARNING INDICATOR ALWAYS ON

Test Step		Result	Action to Take
B1	CHECK PROPER FUNCTION OF BRAKE WARNING INDICATOR WHEN RELEASED		
	• Key on or in ACCY. • Verify parking brake is fully released. • **Is the red brake warning indicator on?**	Yes ▶ No ▶	GO to **B2**. Brake warning indicator bulb and circuits are functioning properly.
B2	CHECK BRAKE FLUID LEVEL IN BRAKE MASTER CYLINDER		
	• Check the brake fluid level at the brake master cylinder reservoir. • **Is the brake fluid level within specification?**	Yes ▶ No ▶	GO to **B3**. CHECK for leaks in the vehicle brake system and SERVICE as required. FILL the brake master cylinder reservoir to the required level. REPEAT **B1**.
B3	VERIFY FLOAT BUOYANCY		
	• Remove the brake master cylinder filler cap from the brake master cylinder reservoir. • Using a clean steel implement, attempt to push the float down. • **Does the float move down?**	Yes ▶ No ▶	GO to **B4**. REPLACE the brake master cylinder reservoir. BLEED the brake system. REPEAT **B1**.
B4	CHECK REAR ANTI-LOCK BRAKE SYSTEM (RABS) MODULE		
	• Key off. • Disconnect RABS module harness connector. • Key on. • **Does the brake warning indicator turn on?**	Yes ▶ No ▶	RECONNECT RABS module connector. GO to **B5**. REPLACE anti-lock brake control module. RECONNECT RABS module connector. REPEAT **B1**.
B5	LOCATE CAUSE OF RED BRAKE WARNING INDICATOR ON		
	• Key off. • Disconnect the fluid level switch harness connector from the brake master cylinder reservoir. • Key on. • **Does the brake warning indicator turn on?**	Yes ▶ No ▶	Diesel only: GO to **B6**. All others: GO to **B7**. GO to **B8**.
B6	LOW VACUUM SWITCH CHECK (DIESEL ONLY)		
	• Key off. • Disconnect low vacuum switch harness connector. • Key on. • **Does the brake warning indicator turn on?**	Yes ▶ No ▶	GO to **B7**. RECONNECT all loose connections. REFER to Section 06-07B to diagnose reason for low vacuum switch actuating the brake warning indicator.
B7	PARKING BRAKE SWITCH CHECK		
	• Key off. • Disconnect parking brake switch harness connector. • Key on. • **Does the brake warning indicator turn on?**	Yes ▶ No ▶	LOCATE and SERVICE short to ground in Circuit 977 (P/W), 640 (R/Y), 531 (DG/Y), or 162. RECONNECT all loose connections. REPEAT **B1**. REPLACE parking brake switch. RECONNECT all loose connections. REPEAT **B1**.
B8	BRAKE WARNING INDICATOR TEST		
	NOTE: The brake warning indicator should only light when the ignition switch is in the START position or when the ignition switch is on and the parking brake is applied (gasoline), or when the vacuum is low (diesel). • Release parking brake. • Check brake fluid level in brake master cylinder reservoir. Fill as required. • Key in ACCY or on. • **Does brake warning indicator turn on?**	Yes ▶ No ▶	CHECK switch wiring for possible short to ground. SERVICE or REPLACE as required. GO to **B9**. GO to **B10**.

Official Licensed Product

DIAGNOSIS AND TESTING (Continued)

PINPOINT TEST B: BRAKE WARNING INDICATOR ALWAYS ON (Continued)

Test Step		Result ▶	Action to Take
B9	MASTER CYLINDER FLUID LEVEL SWITCH WIRING CHECK		
	• Partially drain the brake master cylinder reservoir. • Key to RUN and observe brake warning indicator. • **Does the brake warning indicator illuminate?**	Yes ▶ No ▶	FILL brake master cylinder reservoir. Switch OK. CHECK for open in fluid level switch to brake warning indicator wiring. SERVICE as required. If no open found, GO to **B10**.
B10	MASTER CYLINDER LEVEL SWITCH CHECK		
	• Manually push the float in the brake master cylinder reservoir to the bottom. • Key to RUN and observe the brake warning indicator. • **Does the brake warning indicator illuminate?**	Yes ▶ No ▶	REFILL brake master cylinder reservoir. Switch OK. GO to **B11**.
B11	FLUID LEVEL SWITCH CHECK		
	• Key off. • With the fluid level switch harness connector disconnected, jumper between Circuits 512 (T/LG) and 531 (DG/Y). • Key on. 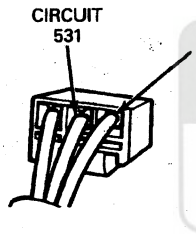 • **Does the brake warning indicator turn on?**	Yes ▶ No ▶	LOCATE and SERVICE short to ground in Circuit 512 (T/LG). RECONNECT all loose connections. REPEAT **B1**. REPLACE brake master cylinder reservoir. BLEED brake system. RECONNECT all loose connections. REPEAT **B1**.

Official Licensed Product Ford Motor Company

PINPOINT TEST C: PEDAL IS LOW OR SPONGY

Test Step		Result ▶	Action to Take
C1	BRAKE PEDAL RESERVE CHECK		
	• Key on, engine running at idle with transmission in PARK or NEUTRAL. • Depress brake pedal lightly three or four times. • Wait 15 seconds to allow the vacuum to replenish. • Push down on brake pedal until it stops moving downward or an increased resistance to the brake pedal travel occurs. NOTE: This increased resistance may feel like the pedal has bottomed out. • Hold the brake pedal in the applied position while increasing the engine speed to 2000 rpm. • Release the accelerator pedal. • **Does the brake pedal move downward as engine speed returns to normal?**	Yes ▶ No ▶	GO to **C2**. CHECK vacuum to power brake booster. REFER to Section 06-07A or Section 06-07B.
C2	BRAKE FLUID LEVEL CHECK		
	• Check brake fluid level. • **Is brake fluid level within specifications?**	Yes ▶ No ▶	GO to **C3**. CHECK brake master cylinder reservoir sealing points. ADD fluid and BLEED system.
C3	FILLER CAP VENT CHECK		
	• Check if brake master cylinder filler cap vent holes are clogged or dirty. • **Are holes clogged or dirty?**	Yes ▶ No ▶	CLEAN as necessary. GO to **C4**.

DIAGNOSIS AND TESTING (Continued)

PINPOINT TEST C: PEDAL IS LOW OR SPONGY (Continued)

Test Step		Result ▶	Action to Take
C4	BLEED BRAKE SYSTEM		
	• Bleed brake system. • **Has the condition been corrected?**	Yes ▶ No ▶	Vehicle OK. GO to **C5**.
C5	FRONT WHEEL BEARING ADJUSTMENT CHECK		
	• Check front wheel bearings for proper adjustment. • **Are bearings properly adjusted?**	Yes ▶ No ▶	CHECK rear brake adjustment and ADJUST if necessary. REPEAT **C1**. ADJUST front wheel bearings.

PINPOINT TEST D: BRAKES LOCK UP WITH LIGHT PEDAL PRESSURE

Test Step		Result ▶	Action to Take
D1	TIRE CHECK		
	• Check tires for uneven wear and correct pressure. • **Is there a wear or pressure concern?**	Yes ▶ No ▶	CORRECT tire concern. REFER to Section 04-04. GO to **D2**.
D2	BRAKE SHOE AND LINING CHECK		
	• Inspect brake shoe and linings for contamination, correct installation, damage, correct size and type. • **Is there a brake shoe and lining concern?**	Yes ▶ No ▶	SERVICE or REPLACE brake shoe and lining. REFER to Section 06-02, Section 06-03 or Section 06-04. GO to **D3**.
D3	PARKING BRAKE CHECK		
	• Inspect parking brake components for damage or seized condition. • **Is there a parking brake concern?**	Yes ▶ No ▶	CORRECT parking brake concern. REFER to Section 06-05. GO to **D4**.
D4	WHEEL BEARING CHECK		
	• Raise vehicle enough to relieve weight on tires. • Pull alternately on front and rear of each tire to check for loose or damaged wheel bearings. • **Is there a wheel bearing concern?**	Yes ▶ No ▶	CORRECT the wheel bearing concern. REFER to the appropriate section in Group 04 or Group 05 in the Powertrain, Drivetrain Manual. GO to **D5**.
D5	POWER BRAKE BOOSTER PUSH ROD CHECK		
	• Support the brake master cylinder and remove the brake master cylinder mounting nuts. • Position the brake master cylinder out of the way. • With a shop-fabricated gauge, check the power brake booster push rod adjustment. • The exposed end of the power brake booster push rod should be within 24.89-25.27 mm (0.980-0.995 in.) of the brake master cylinder mounting surface on the power brake booster. • **Does the power brake booster push rod require adjustment?**	Yes ▶ No ▶	ADJUST as necessary. REFER to Section 06-07A. GO to **D6**.
D6	ABS HYDRAULIC CONTROL UNIT (HCU) CHECK; REAR ANTI-LOCK BRAKE SYSTEM (RABS) (F-250 HEAVY DUTY AND F-350)		
	• Perform the appropriate diagnostic tests in Section 06-09 to check for defective dump valve and return to this test step. • **Is there a RABS concern?**	Yes ▶ No ▶	SERVICE or REPLACE the HCU. REFER to 06-09. CHECK for possible brake fluid contamination. CORRECT as necessary. RETEST system.

Official Licensed Product Ford Motor Company

DIAGNOSIS AND TESTING (Continued)

PINPOINT TEST E: SLOW OR INCOMPLETE BRAKE PEDAL RETURN

Test Step		Result ▶	Action to Take
E1	BRAKE PEDAL RETURN CHECK		
	• Run engine at fast idle while making several brake applications. • Pull brake pedal rearward with approximately 44.5 N (10 lb) force. • Release the brake pedal and measure the distance to the toe board. • Make a hard brake application. • Release the brake pedal and measure the brake pedal to toe board distance. The brake pedal should return to its original position. • **Did brake pedal return to original position?**	Yes ▶ No ▶	Vehicle OK. GO to **E2**.
E2	BRAKE PEDAL BINDING CHECK		
	• Check brake pedal for sticking or binding. • **Is the brake pedal operating freely?**	Yes ▶ No ▶	REPLACE power brake booster. CORRECT any sticking or binding.

PINPOINT TEST F: EXCESSIVE PEDAL EFFORT REQUIRED, VACUUM BOOST SYSTEM

Test Step		Result ▶	Action to Take
F1	VACUUM CHECK		
	• Disconnect vacuum booster hose from booster. • Connect Rotunda Vacuum / Pressure Tester 164-R0253 or Rotunda Vacuum Tester 014-R1054 or equivalent to the vacuum hose with a T-fitting. • Key on, engine running. Allow engine to reach normal operating temperature. • Record the vacuum pressure. • **Is the vacuum reading 57-70 kPa (17-21 in-Hg)?**	Yes ▶ No ▶	GO to **F2**. TUNE UP or SERVICE engine as required.
F2	SYSTEM INSPECTION		
	• Key off. • Reconnect the vacuum line. • Inspect power brake booster check valve, rubber grommet and all vacuum plumbing for cracks, holes, bad connections or missing clamps. • Push down on brake pedal and hold. • Key on, engine running. • **Does the brake pedal move downward when the engine is started?**	Yes ▶ No ▶	Vacuum system is OK. GO to **F3** for diesel engines. GO to **F4** for gas engines.
F3	VACUUM DROP CHECK, DIESEL ONLY		
	• Key off. • Disconnect the vacuum line and connect a vacuum gauge with a T-fitting to the lower part of dash-mounted plastic check valve. • Key on, engine running at idle until vacuum reaches 57-70 kPa (17-21 in-Hg). • Key off. • Observe vacuum gauge for 1 minute. • **Does vacuum pressure drop more than 3.4 kPa (1 in-Hg)?**	Yes ▶ No ▶	REPLACE power brake booster check valve. GO to **F4**.
F4	COMPONENT ISOLATION CHECK		
	• Key off. • Reconnect the vacuum gauge to the same point as in Step F1, but leave the rest of the system connected. • Key on, engine running at idle until vacuum reaches 57-70 kPa (17-21 in-Hg). • Key off. • Observe vacuum gauge for 1 minute. • **Does vacuum pressure drop more than 3.4 kPa (1 in-Hg)?**	Yes ▶ No ▶	DISCONNECT each component one at a time and REPEAT the test procedures in **F4** until the leaking component is found. PLUG the disconnected vacuum line while performing the test procedures. SERVICE or REPLACE as required. On diesel engines with dash-mounted power brake booster, REPLACE power brake booster check valve also. GO to **F5**.

DIAGNOSIS AND TESTING (Continued)

PINPOINT TEST F: EXCESSIVE PEDAL EFFORT REQUIRED, VACUUM BOOST SYSTEM (Continued)

Test Step		Result ▶	Action to Take
F5	BOOSTER LEAK CHECK		
	• Key on. • Run engine until vacuum pressure reaches 57-70 kPa (17-21 in-Hg). • Key off. • Push down on the brake pedal and hold for a few seconds and release. • **Does the vacuum drop to 0 kPa (0 in-Hg)?**	Yes ▶ No ▶	REPLACE power brake booster. System checks OK. REMOVE vacuum gauge and RECONNECT all vacuum lines.

PINPOINT TEST G: EXCESSIVE PEDAL EFFORT REQUIRED, HYDRO-BOOST SYSTEM

Test Step		Result ▶	Action to Take
G1	FLUID LEVEL CHECK		
	• Check power steering pump fluid level. • **Is fluid level within specifications?**	Yes ▶ No ▶	GO to **G2**. CHECK Hydro-Boost leak points. ADD fluid as required.
G2	BELT CHECK		
	• Check the power steering belt tension, and condition. • **Is drive belt OK?**	Yes ▶ No ▶	GO to **G3**. ADJUST belt tension as required. REFER to Section 03-05 in the Powertrain, Drivetrain Manual.
G3	POWER STEERING HOSE CHECK		
	• Check power steering right turn pressure hose, power steering left turn pressure hose and power steering return hose for cracks or leaks. • **Do power steering right turn pressure hose, power steering left turn pressure hose and power steering return hose check OK?**	Yes ▶ No ▶	GO to **G4**. SERVICE or REPLACE as required. REFER to Section 11-00.
G4	BRAKE PEDAL LINKAGE CHECK		
	• Check the brake pedal linkage for binding or sticking operation. • **Does linkage check OK?**	Yes ▶ No ▶	GO to **G5**. SERVICE or REPLACE as required. REFER to Section 06-06.
G5	PUMP SPEED CHECK		
	• Check engine idle speed against specifications. • **Is engine idle speed OK?**	Yes ▶ No ▶	GO to **G6**. SET engine idle speed to specifications.
G6	PUMP FLOW AND RELIEF CHECK		
	• Test the power steering pump for proper flow and relief pressure. • **Is power steering pump operating properly?**	Yes ▶ No ▶	REPLACE power brake booster. SERVICE or REPLACE power steering pump as required. REFER to Section 11-00.

PINPOINT TEST H: BRAKE FLUID LOSS, HYDRO-BOOST SYSTEM

Test Step		Result ▶	Action to Take
H1	BASIC CHECK		
	• Key off. • Press and release brake pedal several times to deplete all hydraulic pressure from the Hydro-Boost power brake booster. • Press and hold the brake pedal with light pressure. • Key on, engine running. • **Does the brake pedal fall slightly and then hold, and is less pressure now required to hold the brake pedal at this position?**	Yes ▶ No ▶	Hydro-Boost power brake booster is OK. GO to **H2**.
H2	BRAKE BYPASS CONDITION CHECK		
	• Press and release the brake pedal several times. • Hold the brake pedal down with medium pressure of 111-156 N (25-35 lb). • **Does the brake pedal fall away?**	Yes ▶ No ▶	GO to **H3**. GO to **H4**.

DIAGNOSIS AND TESTING (Continued)

PINPOINT TEST H: BRAKE FLUID LOSS, HYDRO-BOOST SYSTEM (Continued)

Test Step		Result	Action to Take
H3	EXTERNAL LEAK CHECK		
	• Check for leaks at power steering return line hoses, brake lines, brake master cylinder and hoses. • **Do components check OK?**	Yes ▶	SERVICE or SERVICE the brake master cylinder internal leak as required.
		No ▶	SERVICE or REPLACE as required. REFER to Section 06-06 or Section 06-07C.
H4	HYDRO-BOOST HOSE CONNECTIONS LEAK CHECK		
	• Clean the Hydro-Boost power brake booster, power steering right turn pressure hose, power steering left turn pressure hose and power steering return hose and connections. • Key on, engine running at idle speed. • Check the Hydro-Boost hose connections for leaking. • **Do the hose connections check OK?**	Yes ▶	GO to **H5**.
		No ▶	SERVICE or REPLACE power steering right turn pressure hose, power steering left turn pressure hose and power steering return hose and connections as required.
H5	HYDRO-BOOST LEAK CHECK		
	• Key on, engine running at idle speed. • Apply the brake pedal with approximately 444 N (100 lb) force of pressure and hold. **CAUTION: Do not hold the brake pedal at 444 N (100 lb) force for more than 5 seconds at a time.** • Check the Hydro-Boost power steering right turn pressure hose, power steering left turn pressure hose and power steering return hose for leaks. • **Do the hoses check OK?**	Yes ▶	GO to **H6**.
		No ▶	REPLACE the Hydro-Boost power brake booster.
H6	RESERVE RETENTION CHECK		
	• Key on, engine running at idle speed. • Charge system pressure by holding the steering wheel on the stop, or by pressing down on the brake pedal with approximately 444 N (100 lb force). • Key off. • Wait 8 to 12 minutes. • Depress the brake pedal. • **Is there any power reserve?**	Yes ▶	Hydro-Boost power brake booster is OK.
		No ▶	REPLACE the Hydro-Boost power brake booster.

Licensed Product Ford Motor Company

Component Tests

WARNING: USE OF ANY OTHER THAN THE APPROVED DOT 3 BRAKE FLUID WILL CAUSE PERMANENT DAMAGE TO BRAKE COMPONENTS AND WILL RENDER THE BRAKES INOPERATIVE.

CAUTION: Always check the fluid level in the brake master cylinder reservoir before performing the test procedures.

If the fluid level is not at the MAX line on the brake master cylinder reservoir, add Ford High Performance DOT 3 Brake Fluid C6AZ-19542-AA or equivalent DOT 3 fluid meeting Ford specification ESA-M6C25-A.

If a brake is locked and the vehicle must be moved, open a bleeder screw at the locked wheel to let out enough fluid to relieve the pressure. Close the bleeder screw. This bleeding operation might release the brakes but will not correct the cause of trouble. If this does not relieve the locked wheel condition, service the locked components before proceeding.

Brake Booster Functional Test

Inspect all hoses and connections. All unused vacuum connectors should be capped. Hoses and their connections should be properly secured and in good condition with no holes or collapsed areas.

Brake Booster Operation Check

1. Check hydraulic brake system for leaks or insufficient fluid.
2. With transmission in NEUTRAL, stop engine and apply parking brake control. Apply brake pedal several times to exhaust all vacuum in the system.
3. Apply brake pedal and hold it in the applied position. Start engine. If vacuum system is operating, brake pedal will tend to move downward under constant foot pressure. If no motion is felt, the power brake booster system is not functioning.

DIAGNOSIS AND TESTING (Continued)

Brake Booster

1. Remove vacuum booster hose from power brake booster and check valve connection. Manifold vacuum should be available at the check valve end of the vacuum booster hose with engine at idle speed and transmission in NEUTRAL. If manifold vacuum is available to the power brake booster, connect vacuum booster hose to power brake booster and repeat Steps 2 and 3 above. If no downward movement of brake pedal is felt, replace power brake booster.
2. Operate engine a minimum of 10 seconds at fast idle. Stop engine, and let vehicle stand for 10 minutes. Apply brake pedal with approximately 89 N (20 lb) of force. Brake pedal feel should be the same as that noted with engine operating. If brake pedal feels hard (no power assist), replace check valve and retest. If brake pedal feels spongy, bleed hydraulic system to remove air. Refer to Section 06-06.

Normal Hydro-Boost will produce certain characteristic noises that current technology cannot correct. These noises occur, for the most part, when the brake pedal is manipulated in a manner not associated with the everyday braking habits. The general categories of normal operating noise are hissing noise and clunk, click and chatter noises.

The Hydro-Boost will emit normal hissing noises when above normal pedal efforts are applied. The hiss sounds are particularly noticeable with the vehicle motionless and will increase in intensity as pedal efforts increase and system operating temperatures increase. Loud hissing sounds at or below normal pedal effort (111-156 N [25-35 lb]) warrant investigation and possible correction.

Clunk, chatter or clicking noises will be heard when the brake pedal is released quickly from hard pedal efforts. Due to "quick release for hard application" requirement for the noises, they will most likely be heard with the vehicle motionless or during a fast stop-start condition. Refer to Pinpoint Tests G and H for Hydro-Boost power brake booster diagnosis.

Possible sources of leakage from the Hydro-Boost power brake booster are:

- input seal
- piston seal
- housing seal
- spool plug seal
- accumulator cap seal
- return port fitting seal

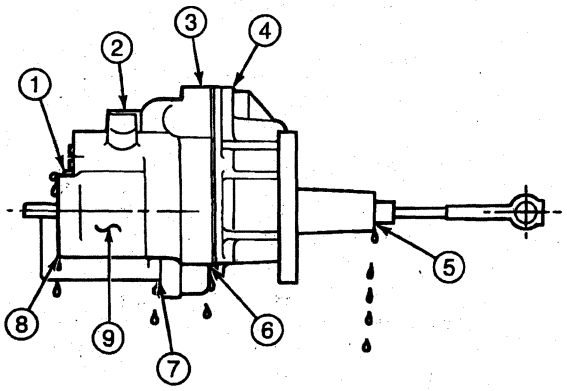

H6268-C

Item	Part Number	Description
1	—	Spool Plug Seal (Part of 2005)
2	—	Return Port to Reservoir (Part of 2005)
3	—	Inlet Port from Power Steering Pump (Part of 2005)
4	—	Outlet Port to Steering Gear (Part of 2005)
5	—	Input Seal (Part of 2005)
6	—	Housing Seal (Part of 2005)
7	—	Accumulator Seal (Part of 2005)
8	—	Piston Seal (Part of 2005)
9	2005	Power Brake Booster

Check Valve

The function of the power brake booster check valve is to allow manifold vacuum to enter the power brake booster and prevent the escape of vacuum in case manifold vacuum is lost during sustained full throttle operation.

To test the functioning of the power brake booster check valve, perform the following:

3. Start and run the engine for at least 10 seconds.
4. Operate the brake pedal to check for power assist.
5. Disconnect the vacuum booster hose from the power brake booster. There should be enough vacuum retained in the power brake booster for at least one more power-assisted brake operation.

Vacuum System Test

To test the vacuum system, refer to Pinpoint Test F in this section.

DIAGNOSIS AND TESTING (Continued)

Brake Master Cylinder

Normal Conditions

The following conditions are considered normal and are not indications that the brake master cylinder is in need of service.

Condition 1: During normal operation of the master cylinder, the fluid level in the brake master cylinder reservoir will rise during brake application and fall during release. The net fluid level after brake application and release will remain unchanged.

Condition 2: A trace of brake fluid will exist on the booster shell below the master cylinder mounting flange. This results from the normal lubricating action of the master cylinder bore and seal.

Condition 3: Fluid level will decrease with pad wear.

Abnormal Conditions

Changes in brake pedal feel or travel are indicators that something could be wrong in the brake system. Refer to the symptom chart in this section for abnormal condition diagnosis.

Bypass Condition Test

For the bypass condition test, refer to Pinpoint Test H in this section.

Non-Pressure Leaks

The only part of the brake system that could have a brake fluid loss that does not appear when the system is under pressure is the brake master cylinder reservoir area. Brake fluid loss could be caused by any of the following:

- a missing or poorly fitted brake master cylinder filler cap
- a punctured or otherwise damaged brake master cylinder reservoir
- a missing or damaged brake master cylinder filler cap gasket
- missing, damaged or poorly fitted sealing grommets between the brake master cylinder and the brake master cylinder reservoir

The brake master cylinder reservoir grommets are not separately serviceable and must be replaced with a new brake master cylinder reservoir.

NOTE: The wet appearance of the outer cover of rubber brake hoses is called sweating and is normal with neoprene rayon braid hose. It is not evidence of a brake fluid leak and will not result in a loss of pressure in the system.

Replace a flexible brake hose if it shows signs of softening, cracking or other damage.

When installing a new brake hose, position the hose to avoid contact with other vehicle parts.

Compensator Port Check

The compensator ports in the brake master cylinder supply additional brake fluid required by the system due to brake pad wear and allow brake fluid returning from the brake lines to the brake master cylinder to enter the brake master cylinder reservoir.

The returning brake fluid will cause a slight turbulence in the brake master cylinder reservoir. If turbulence is seen in the brake master cylinder reservoir upon release of the brake pedal, this is normal and indicates that the compensating ports are not plugged.

Brake Master Cylinder Fluid Control Valve

If there is a brake system concern such as premature rear brake lockup that cannot be attributed to the rear anti-lock brake system (RABS), the cause could be a malfunctioning brake master cylinder fluid control valve (2C161).

Check the brake master cylinder fluid control valve by substituting the suspected bad valve with a known good one. If the condition persists, recheck the RABS. Refer to Section 06-09 for RABS diagnostics.

SERVICE PROCEDURES

Hydraulic Leak Test

For hydraulic leak test procedures on vehicles equipped with vacuum boost system, refer to Pinpoint Test F. For hydraulic leak test procedures on vehicles equipped with Hydro-Boost system, refer to Pinpoint Test H.

Brake, Power — Function Test

The power brake assist can be tested by checking to see if brake application requires less effort with the engine (6007) running. If the effort is the same with or without the engine running, isolate the problem using the diagnostic test procedures in this section. Refer to Pinpoint Tests F, G and H.

Brake System Pressure Test

The pump flow and pressure tests will confirm or rule out the pump as the cause of brake system problems.

Prior to performing the pump flow and pressure test, perform the Hydraulic Leak Test in this section.

If all preliminary items are to specifications, or have been corrected, and the loss of assist still exists, test the brake pump flow and pressure to determine whether the trouble is in the pump, the Hydro-Max booster, the HR-1 valve, the plumbing or the pressure relief valve, according to the following procedure.

Preparation for Hydraulic Pressure/Flow Tests

The power steering analyzer is to be used when the brake system is suspected of erratic operation or insufficient power assist, and the pump does not exhibit sustained failure or internal damage that may contaminate the fluid in the system. Rotunda Truck Medium/Heavy Duty Power Steering Analyzer 014-00230 consists of a pressure gauge, flow meter, shutoff valve, thermometer, hose and adapter attachments.

Official Licensed Product

SERVICE PROCEDURES (Continued)

Possible contamination of the system fluid can cause permanent damage to gauges and instruments incorporated in the analyzer. If there is a possibility of burned fluid or metal particles in the fluid, the brake system should be purged before connecting the power steering analyzer.

Refer to equipment instructions for installation diagrams and torque specifications.

1. To connect the analyzer into the brake system, disconnect the pressure line from the connector at the gear, pump or lines, as indicated in the hookup diagrams.
2. Thread M-16 Adapter D85T-33610-A or equivalent to the connector and insert in gauge pressure line.
3. Connect the analyzer to the adapters and tighten. Be sure the analyzer line at the shutoff valve end is connected to the pump of the vehicle brake system as indicated in hookup diagram.
4. Fully open the shutoff valve, start engine and purge the air from the brake system by applying the brakes several times. Shut off engine and check connections for leaks.
5. Check for proper fluid level at reservoir and add or remove fluid as required. Recheck for air in the system by restarting engine; partially close the shutoff valve and view the pressure gauge. If the gauge needle vibration is excessive, too much air remains in the system. Repeat Step 4 to purge any remaining air from the system.
6. Install thermometer provided with analyzer in the reservoir and connect tachometer to the engine.

Hydraulic Pressure/Flow Test Procedure

1. Check brake system back pressure as follows:
   a. Fully open the analyzer shutoff valve.
   b. Start engine and run at 2,000 rpm.
   c. When fluid temperature reaches 55°C (130°F), record flow and pressure.
      — If flow is below 11.7 lpm (3.1 gpm), check to see if correct pump is installed for the vehicle being tested. If correct pump is installed, continue testing to find problem.
      — If pressure exceeds 172 kPa (25 psi), check lines for kinks or obstructions. If none are found and pressure remains high, continue testing to find problem.
2. Check pump for minimum efficiency flow.
   a. Decrease engine speed to 800 ± 50 rpm.
   b. Slowly close the shutoff valve to build pressure to 8400 kPa (1200 psi).
   c. Record flow with temperature at 55°C (130°F) or above.
   d. If flow is below 5 lpm (1.3 gpm), check if correct pump is installed for vehicle and equipment being tested. Pump may require service or replacement, if flow in Step 1 was also below value indicated.
3. **CAUTION: Do not hold the valve closed for more than five seconds. Failure to follow this caution will result in damage to pump.**

   Check pump for pressure relief valve operation as follows:
   a. Run engine at 800 ± 50 rpm.
   b. Completely close and partially open the shutoff valve three times.
   c. Read pressure when valve is fully closed.
      — If pressure is below 8480 kPa (1230 psi), clean or replace pressure relief valve.
      — If pressure reading exceeds 9307 kPa (1350 psi), clean or replace pressure relief valve.
      — If flow/pressure checks are within specifications, the pump is operating normally and other areas should be investigated.

Brake System Test Procedure

Air Trapped In Brake System

If it is suspected that air is in the brake system, refer to Pinpoint Test C in this section.

Brake Pedal Reserve Check

Where a low brake pedal (2455) or the feel of a bottomed-out condition exists, check for brake pedal reserve.

1. Operate engine (6007) at idle with the transmission (7003) in either PARK or NEUTRAL.
2. Depress brake pedal lightly three to four times.
3. Allow 15 seconds for vacuum to replenish power brake booster (2005).
4. NOTE: Increased resistance can feel like the brake pedal has bottomed out.

   Apply brake pedal until it stops moving downward or an increased resistance to the brake pedal travel occurs.
5. Hold brake pedal in applied position and raise the engine speed to approximately 2000 rpm.
6. NOTE: The additional movement of the brake pedal is the result of the increased engine manifold vacuum, which exerts more force on the power brake booster during engine rundown. This means that additional stroke is available in the brake master cylinder (2140) and the brake system is not bottoming out as a customer may believe.

   Release accelerator pedal and observe that brake pedal moves downward as engine returns to idle speed.

SERVICE PROCEDURES (Continued)

Brake Hose

NOTE: The wet appearance of the outer cover of rubber brake hoses is called sweating and is normal with neoprene rayon braid hose. It is not evidence of a brake fluid leak and will not result in a loss of pressure in the system.

Replace a flexible brake hose if it shows signs of softening, cracking or other damage.

When installing a new brake hose, position the hose to avoid contact with other vehicle parts.

CLEANING AND INSPECTION

Service Precautions

1. Grease or any other foreign material must be kept off lining surfaces and braking surfaces of front disc brake rotor (1125) and external surfaces of hub during service operation. In handling the front disc brake rotor and disc brake caliper (2B120) assemblies, avoid deformation of front disc brake rotor and nicking or scratching of brake linings.
2. **CAUTION: Do not pry on front disc brake caliper piston with a screwdriver or other tools; this will cause chipping, nicks and gouges.**

   If a front disc brake caliper piston is removed for any reason, piston seal must be replaced. Exercise care not to damage front disc brake caliper piston by protecting it from contact with any metal or sharp objects.
3. During removal and installation of a wheel assembly, exercise care not to interfere with and damage front disc brake rotor shield (2K004) or bleeder screw fitting.
4. Before servicing any front end components, make sure vehicle is centered on hoist to avoid bending or damaging front disc brake rotor shield on full right or left wheel turns.
5. Do not attempt to clean or restore oil or grease-soaked rear brake shoes and linings (2200). When contaminated rear brake shoes and linings are found, rear brake shoes and linings must be replaced in complete axle sets and front disc brake rotor and brake drum braking surfaces wiped clean.
6. Disc brake calipers must be installed with bleed screws in upward position for proper bleeding of air from brake system.
7. Always replace brake pad insulators when replacing linings.

Brakes, Disc

Front

1. Inspect the disc brake caliper (2B120) and mounting for loose or damaged parts. Make sure the disc brake caliper anchor plate bolts are tightened to 191-259 N·m (141-190 lb-ft).
2. Check the front brake hose (2078) and front disc brake caliper fitting for leaks or damage.
3. Check the disc brake caliper closely for wet areas that might indicate a leaking seal.
4. Measure front disc brake rotor thickness, parallelism and runout carefully. Refer to Brake Rotor, Disc, in the Adjustments portion of this section.
5. Resurface, recondition or replace the front disc brake rotor (1125). A visual inspection will not determine the required service unless the damage is obvious.
6. Check for brake fluid contamination when inspecting the brake shoes and linings. This can indicate a leaking piston seal assembly. If a seal is leaking, the disc brake caliper must be disassembled and inspected. Refer to Section 06-03.
7. Check for even wear from side to side. If the set of brake shoes and linings on one side of the vehicle is excessively worn, the piston might be seized in the bore. If a seized piston is suspected, the disc brake caliper must be disassembled and inspected. Refer to Section 06-03.

Rear

1. Remove the tire and wheel assemblies.
2. Inspect the rear disc brake calipers for signs of brake fluid leakage which can indicate leaking seals.
3. Clean away any debris that can damage brake system parts.
4. Inspect rear brake shoe and lining (2200) for uneven wear. If any rear brake shoe and lining requires replacement, replace the whole axle set.
5. Inspect rear brake hoses for cracking, leaking, abrasion or other damage. Service or replace as necessary.

Brakes, Drum

NOTE: In order to properly inspect the rear brakes, the brake drum (1126) must be removed. Refer to Section 06-02.

Perform the following checks during drum brake diagnosis. Refer to Section 06-02 for additional service procedures.

1. Inspect the brake shoe and lining material for the following conditions:
   - wear beyond service limits
   - uneven wear

CLEANING AND INSPECTION (Continued)

- cracks
- scoring
- gouges
- contamination

2. Inspect the rear wheel cylinder (2261) for signs of leakage.
3. NOTE: A good spring will make a dull thud when dropped on a concrete floor. A heat-damaged spring that has lost tension will make a distinctive ringing sound when dropped on a concrete floor.

   Check the brake shoe adjusting screw springs (2049) and brake shoe retracting springs (2296) for the following signs:

   - heat damage
   - bends or damage to coils or shank
   - loss of tension
4. Check the brake backing plate shoe support pads for signs of scoring. The support pads must be smooth and have a light coating of lithium grease.
5. Inspect the brake drum for scratches, scoring, bell mouth and out-of-round conditions.

Brake Thickness

Inspect brake shoe and lining thickness and replace as necessary. Replace in full axle sets only.

Lining Thickness	
Inboard	**Outboard**
0.0405 to Discard Thickness	0.0405 to Discard Thickness

Brake Booster

Inspect the power brake booster (2005) for damage, misalignment or loose mounting nuts. Make sure the vacuum supply hose connection is secure. A trace of brake fluid below the brake master cylinder mounting is normal and is caused by the wiping action of the brake master cylinder piston seals.

Hydraulic System

An inspection of the brake hydraulic system begins with a brake fluid level check. If the brake fluid level is below the line in the brake master cylinder reservoir, add the required amount of Ford High Performance DOT 3 Brake Fluid C6AZ-19542-AA or equivalent DOT 3 fluid meeting Ford specification ESA-M6C25-A.

Brake Master Cylinder

When in the brake master cylinder area, check the brake lines and brake master cylinder mounting. The brake lines and retaining nuts must be tight. The brake line fittings must not show any signs of leakage. Tighten the brake lines at the brake master cylinder (2140) to 15-20 N·m (11-15 lb-ft) for the fitting at the rear port and 22-28 N·m (16-21 lb-ft) for the front port.

The following conditions are considered normal and are not indications that the brake master cylinder reservoir is in need of service.

- Low brake fluid level detected without signs of leakage. This condition is caused by displacement of brake fluid from the brake master cylinder reservoir into the front disc brake calipers (2B120) to compensate for normal brake wear. Add brake fluid as needed.
- A momentary or slight squirt of brake fluid from the brake master cylinder reservoir upon application of the brake pedal (2455). This condition is caused by brake fluid displacement through the brake master cylinder reservoir compensating port as the brake master cylinder pistons move forward in the bore when the brakes are applied.
- Slight turbulence in the brake fluid when the brake pedal is released. Turbulence occurs as brake fluid returns to the brake master cylinder after releasing the brakes.
- A trace of brake fluid found on the outside of the power brake booster (2005) below the brake master cylinder mounting flange. This condition results from the lubricating action of the master cylinder wiping seal.

Brake Tubing

Inspect the brake tubes under the vehicle for damage and proper routing. Check the hoses connecting the brake tubes to the disc brake calipers and the rear wheel cylinders (2261) for any signs of damage, cracking or softening. The hose fittings must be tight without signs of leakage.

If signs of leakage are not present but the brake master cylinder is definitely low, evidence of brake fluid leakage may have been washed off by rain or snow because brake fluid is water soluble. To determine if a leak exists, perform the following:

1. Refill the system.
2. Bleed the system.
3. Apply the brakes several times.
4. Examine the system to verify that the brake master cylinder reservoir level is actually dropping.
5. Locate and correct the external leak.

Internal and external leaks are two problems that can affect a brake hydraulic system. The hydraulic brake system will not cause grab, squeal or the brake pedal to pulse (except during ABS operation).

Official Licensed Product
Ford Motor Company

CLEANING AND INSPECTION (Continued)

In most cases the hydraulic system will not cause the brakes to drag. The sources of these problems are found elsewhere in the brake system, but it is always a good policy to first check the entire hydraulic system for leaks before continuing to diagnose any other brake problems.

Parking Brake

- Inspect the parking brake control (2780) and look for loose mounting bolts, damaged or missing parts.
- Operate the parking brake and check for binding or seized components.
- Raise and support the vehicle and remove any debris that can interfere with parking brake operation.
- Check the condition of the parking brake cables. Look for abrasion or cables rubbing on body or frame parts. Service, replace or reroute as necessary.
- Remove the brake drums (1126) and have an assistant operate the parking brake just enough to observe operation. Look for damaged or missing parts.
- Lubricate parking brake parts with Silicone Brake Caliper Grease and Dielectric Compound D7AZ-19A331-A (Motorcraft WA-10) or an equivalent silicone compound meeting Ford specification ESE-M1C171-A.

ADJUSTMENTS

Brake Pedal

On brake master cylinder or dash-mounted power brake booster equipped vehicles, the brake systems are designed to permit a full stroke of the brake master cylinder (2140) when the brake pedal (2455) is fully depressed. A brake pedal clearance adjustment is not required.

For proper brake pedal adjustment on F-Super Duty Motorhome vehicles, refer to Section 06-06.

To release the brakes, fluid must flow back to the master cylinder through a return port when pedal pressure is released. To be sure the piston moves back far enough to expose the return port, free-travel is in to the pedal linkage on standard booster systems. This prevents the piston from becoming trapped in a partially released position. Pedal-free travel is not always perceptible in dash-mounted power brake booster systems, because the operating clearance for the piston is adjusted at the booster push rod, rather than the brake pedal linkage. Refer to Section 06-07A for instructions on dash-mounted booster push rod adjustment.

Brake Load Sensor Proportioning Valve, F-Super Duty Vehicles (Except Motorhome Chassis)

Inspect the vehicle to determine if the rear suspension has been modified. If the rear suspension has been modified, the ride height and spring rate have been altered and the brake load sensor proportioning valve cannot work properly. However, if the suspension has not been modified the brake load sensor proportioning valve may be reset and linkage can be replaced according to the following procedure.

SPECIAL SERVICE TOOL(S) REQUIRED

Description	Tool Number
Height Sensor Proportioning Valve Indexing Tool	T90T-2588-A

1. NOTE: Refer to Section 06-06 for brake load sensor proportioning valve removal and installation procedures.

   Raise the rear of the vehicle with body jacks to attain a clearance of 168 mm (6.6 inch) between the bottom surface of each rear axle bumper (4730) and the rear axle (4001).

ADJUSTMENTS (Continued)

Brake Load Sensor Proportioning Valve, F-Super Duty (Except Motorhome Chassis)

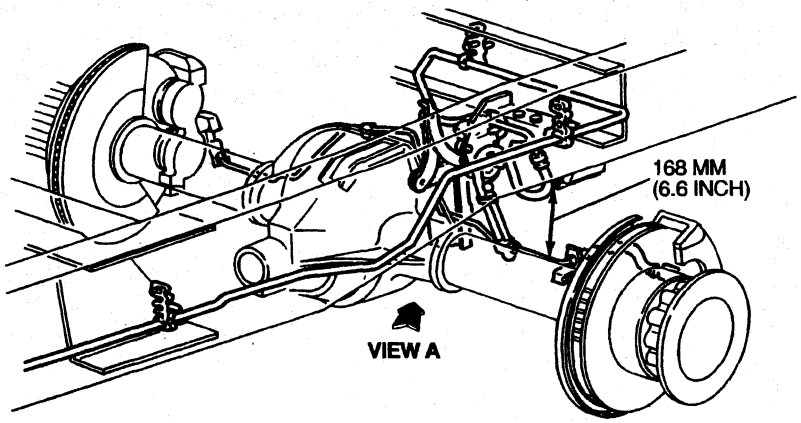

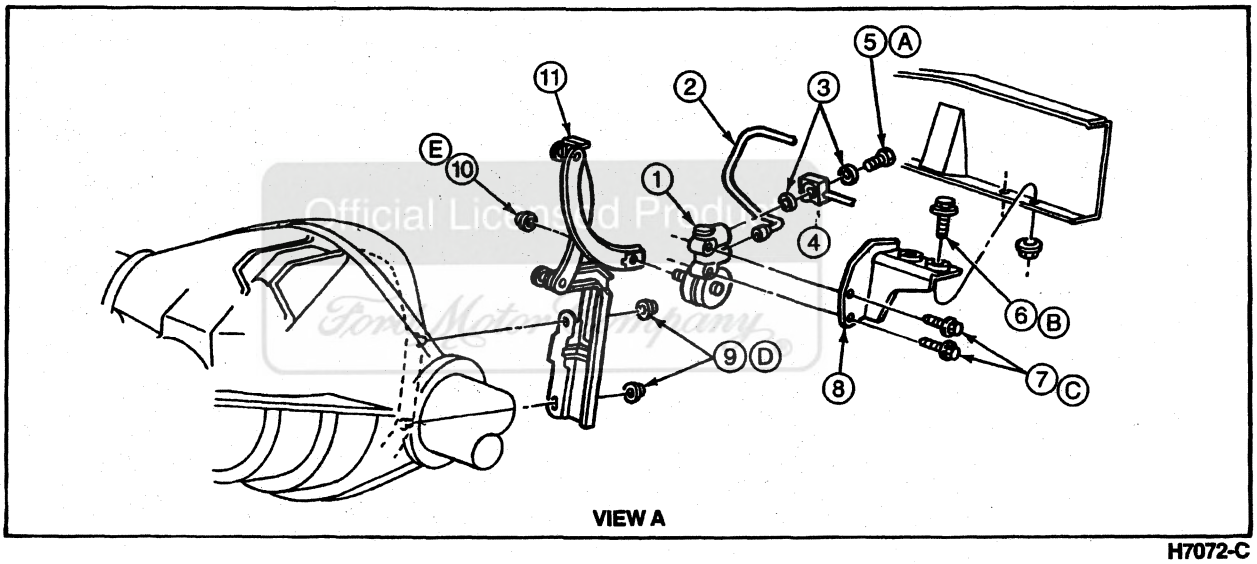

H7072-C

Item	Part Number	Description
1	2B547	Brake Load Sensor Proportioning Valve
2	2265	Brake Tube
3	388949-S	Copper Washer
4	2282	Rear Brake Hose
5	385116-S2	Bolt
6	N605789	Bolt
7	56522	Bolt
8	2B256	Bracket
9	379930	Nut

(Continued)

Item	Part Number	Description
10	379930	Nut
11	2C193	Linkage
A	—	Tighten to 23-34 N·m (17-25 Lb-Ft)
B	—	Tighten to 26-41 N·m (19-30 Lb-Ft)
C	—	Tighten to 30-40 N·m (22-30 Lb-Ft)
D	—	Tighten to 34-46 N·m (25-34 Lb-Ft)
E	—	Tighten to 15-20 N·m (11-15 Lb-Ft)

ADJUSTMENTS (Continued)

2. Remove the nut from the valve shaft and remove the leading arm of the linkage assembly. Save the nut.

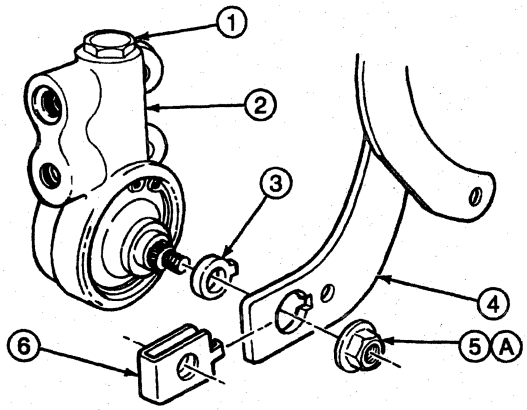

H5074-C

Item	Part Number	Description
1	—	Hex-Head Plug (Part of 2B547)
2	2B547	Brake Load Sensor Proportioning Valve
3	—	Bushing (Part of 2B547)
4	2C193	Linkage Assy
5	379930-S2	Nut
6	—	Clip (Part of 2C193)
A	—	Tighten to 15-20 N·m (11-15 Lb-Ft)

3. Remove the bushing and clip from the leading arm of the linkage assembly.
4. Install the new bushing and clip provided in the Linkage Kit E8TZ-2L193-A or equivalent.
5. Rotate the valve shaft one full turn in either direction. Position the shaft with the flat at the bottom and parallel with the ground.

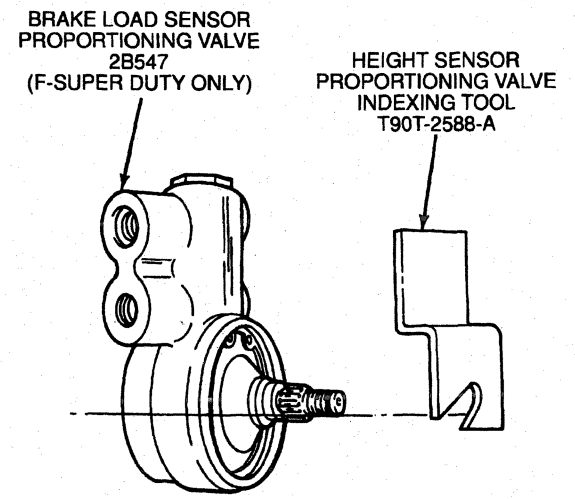

H5075-C

6. Install the Height Sensor Proportioning Valve Indexing Tool T90T-2588-A on the shaft so the flat on the tool aligns with the flat on the valve shaft. Make sure the valve shaft is nested fully in the tool opening and the upper surface of the tool rests on the valve body.
7. Make sure the tool and valve shaft are firmly engaged. Rotate the indexing tool counterclockwise until the edge surface of the tool contacts the brake hose block.

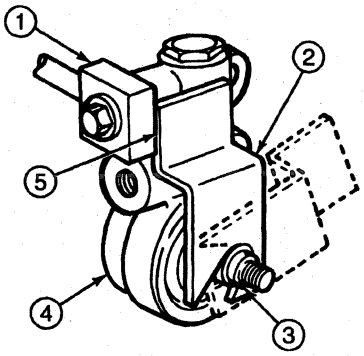

H5076-D

Item	Part Number	Description
1	2282	Rear Brake Hose
2	T90T-2588-A	Height Sensor Proportioning Valve Indexing Tool
3	—	Brake Load Sensor Proportioning Valve Shaft Seated in Tool Slot
4	2B547	Brake Load Sensor Proportioning Valve
5	—	Indexing Tool Seated Against Rear Brake Hose Block

ADJUSTMENTS (Continued)

8. While holding the indexing tool in the position established in Step 6, install the leading arm of the linkage assembly over the splined section of the valve shaft. Use a 1/2-inch deep socket as a driver and tap it with a hammer to fully seat the linkage on the splines.
9. Reinstall the valve shaft nut removed in Step 2. Tighten the nut to 15-20 N·m (11-15 lb-ft).
10. Remove the indexing tool.

Brakes, Front — Disc

The front disc brake assembly is self-adjusting. Refer to Section 06-03.

Brakes, Rear — Disc

Refer to Section 06-04.

Brakes, Rear — Drum

Rear drum brakes are adjusted automatically by alternately driving the vehicle forward and in reverse, and sharply applying the brakes when the vehicle is driven in reverse. Manual brake adjustment is required only when the rear brake shoes and linings (2200) are replaced or the adjusters are not functioning adequately. Refer to Section 06-02.

Hydraulic Brake Fluid Color

Hydraulic brake fluid color must conform with the requirements of Federal Motor Vehicle Safety Standard 116. Under this standard, brake fluids are visually different from other automotive fluids such as transmission, power steering and engine oil.

The color of the brake fluid in a normal brake system in service can vary from its original color for many reasons. Sometimes a brake master cylinder (2140) may show significantly different shades of color of brake fluid in the brake master cylinder reservoir. Some of the reasons for the apparent difference in color in a system are listed below.

- Brake fluid discoloration can occur due to heat or aging.
- Brake fluid discoloration can exist when different brands/shades of brake fluid are used in topping off during normal service.
- Brake fluid discoloration can occur through the dissolving of color dye used on brake master cylinder internal springs in manufacturer's assembly procedure.

NOTE: Brake fluid contaminated with a hydrocarbon/mineral based fluid (power steering or transmission fluid) can be detected by an obvious swelling of the brake master cylinder filler cap gasket. If the swollen gasket condition is present, all brake system rubber parts must be replaced. All brake tubes must be thoroughly flushed with Ford High Performance DOT 3 Brake Fluid C6AZ-19542-AA or equivalent DOT 3 brake fluid meeting Ford specification ESA-M6C25-A before the vehicle goes back into service.

Brake Fluid Level Check

WARNING: BRAKE FLUID CONTAINS POLYGLYCOL ETHERS AND POLYGLYCOLS. AVOID CONTACT WITH EYES. WASH HANDS THOROUGHLY AFTER HANDLING. IF BRAKE FLUID CONTACTS EYES, FLUSH EYES WITH RUNNING WATER FOR FIFTEEN MINUTES. GET MEDICAL ATTENTION IF IRRITATION PERSISTS. IF TAKEN INTERNALLY, DRINK WATER AND INDUCE VOMITING. GET MEDICAL ATTENTION IMMEDIATELY.

Check the brake fluid level in the brake master cylinder reservoir on the brake master cylinder (2140). The brake fluid level should be at or near the MAX mark. If the brake fluid level is low, inspect the brake system and add brake fluid as directed in the following procedure.

Brake System Service

1. **WARNING: USE OF ANY OTHER THAN THE APPROVED DOT 3 BRAKE FLUID WILL CAUSE PERMANENT DAMAGE TO BRAKE COMPONENTS AND WILL RENDER THE BRAKES INOPERATIVE.**

   Clean and remove the brake master cylinder filler cap (2162) from the brake master cylinder reservoir.
2. Fill the brake master cylinder reservoir to the MAX line with Ford High Performance DOT 3 Brake Fluid C6AZ-19542-AA or equivalent DOT 3 fluid meeting Ford specification ESA-M6C25-A.
3. Install the brake master cylinder filler cap on the brake master cylinder reservoir.

Brake Rotor, Disc

Brake pulsation (brake roughness) that is present during brake application is caused either by foreign material buildup or contamination on the disc brake hub and rotor braking surface, or by uneven rotor thickness.

If there is a foreign material buildup or contamination found on the disc brake hub and rotor or brake shoe and lining surfaces, hand sand linings and rotors.

ADJUSTMENTS (Continued)

Uneven disc brake hub and rotor thickness (thickness variation) can be caused by the following:

- disc brake hub and rotor lateral runout in excess of 0.05 mm (0.003 inch) for the front disc brake assembly or 0.20 mm (0.008 inch) for the rear brake assembly when the rotor is mounted on the hub
- disc brake caliper drag
- abrasive action of brake lining

If brake pulsation or roughness is present, attempt stopping vehicle with transmission in the NEUTRAL position. If the pulsation or roughness is gone, the drivetrain should be inspected. If pulsation or roughness remains, inspect brakes.

Front and rear disc brake rotor specifications are listed in the Specifications chart at the end of this section.

Runout

Front

Front disc brake rotor lateral runout is the side-to-side movement or wobble of the front disc brake rotor (1125) as it rotates. Excessive runout may cause vibration, brake pedal pumping, low brake pedal (2455) or brake chatter. Use the following procedure to check front disc brake rotor runout.

1. Tighten the front axle wheel hub retainer (3B477) (front brakes only) to eliminate all end play from the front wheel bearing. Be sure the front disc brake rotor can be turned.
2. Attach Dial Indicator with Bracketry TOOL-4201-C or equivalent to some part of the vehicle suspension so the stylus of the indicator touches the surface of the front disc brake rotor approximately 25.4 mm (1 inch) from outer edge of the front disc brake rotor.
3. Adjust the dial indicator to mid travel. Zero the scale on the dial indicator. Slowly turn the front disc brake rotor one complete turn and note the high and low readings on the dial. The total between the high and low reading must not exceed the specified runout limit.
4. **CAUTION: Be sure to adjust the front axle wheel hub retainer to specifications after the runout check.**

   Refinish or replace the front disc brake rotor as required.

Rear

Check the lateral runout of the rotor by mounting Dial Indicator / Magnetic Base D78P-4201B or equivalent to the rear axle housing so that the indicator contact point rides on the rotor braking surface.

Rotate the rotor / rear hub assembly and observe the dial indicator reading. Maximum lateral runout is 0.20 mm (0.008 inch).

Parallelism

Parallelism is the variation in the thickness of the disc brake rotor. If the two rubbing surfaces of the disc brake rotor are not parallel, the disc brake rotor can cause excessive brake pedal travel, a pulsating brake pedal, or noise.

Two methods can be used to check if the two faces of a disc brake rotor are parallel. A micrometer can be used to measure the disc brake rotor thickness at 12 points approximately 30 degrees apart and 25.4 mm (1 inch) from the outer edge of the disc brake rotor.

The other method is to measure the disc brake rotor on a precision lathe designed for machining disc brake rotors. Attach two dial indicators, one on each side of the disc brake rotor, so that the stylus on each indicator contacts the rubbing surface, directly opposite each other, approximately 25.4 mm (1 inch) from the outer edge of the disc brake rotor.

Zero both indicators and rotate the disc brake rotor while watching both dials. If the total readings of both indicators exceed the specified limit for parallelism, the disc brake rotor must be refinished or replaced.

Refinishing

Front

Do not machine, cut or true up new front disc brake hub and rotors (1102) prior to installation on vehicle. Making a light cut on a new front disc brake hub and rotor can cause excessive runout and result in brake shudder several thousand miles later. It is best to clean oil film off new front disc brake hub and rotor with Metal Brake Parts Cleaner F2ZZ-19579-AA or equivalent and install it on vehicle.

Never use a brake lathe that cuts only one face of the front disc brake hub and rotor at a time. It must be a simultaneous straddle cut. All front disc brake hub and rotor refinishing must adhere to the rule that equal amounts of front disc brake hub and rotor stock are removed from each braking surface each time a front disc brake hub and rotor is refinished.

On-vehicle brake lathes machine the front disc brake hub and rotor while it is on the hub and is turning on the same axis as the hub. This procedure reduces front disc brake hub and rotor lateral runout to near zero by cutting the front disc brake hub and rotor perpendicular to the axis of the hub, therefore cancelling the effect of stacked tolerance of the hub, front disc brake hub and rotor and front wheel spindle (3105). Follow the on-vehicle brake lathe manufacturer's instructions on machining procedures.

A bench-mounted disc brake lathe machines the front disc brake hub and rotor to the axis of the lathe arbor and will not reduce total lateral runout associated with stacked tolerances of the hub, front disc brake hub and rotor and front wheel spindle. Follow manufacturer's instructions on machining procedures.

Licensed Product

ADJUSTMENTS (Continued)

With both types of brake lathes, set cutting tool to just contact the high spots on the front disc brake hub and rotor, then adjust cutting tool to the minimum depth required to clean up the front disc brake hub and rotor face. The total material removed (combination of both sides) must not exceed the minimum discard thickness that is marked on the inside of the front disc brake hub and rotor.

To improve initial brake pedal feel and surface finish on a machined front disc brake hub and rotor, lightly sand rotor surface with 120 grit paper prior to road testing.

Rear

1. If there are surface irregularities, the rear disc brake rotor can be resurfaced by lightly sanding the face with a fine emery cloth using the following steps.
   a. Remove the wheel (1007).
   b. Remove the rear disc brake caliper (2B120). Refer to Section 06-04.
   c. Lightly sand both sides of the rear disc brake rotor. The back side of the rear disc brake rotor can be sanded at the rear wheel disc brake shield (2C028) where the disc brake caliper normally rides. If scratches or scoring exceed 0.22 mm (0.009 inch), the rear disc brake rotor must be resurfaced.
2. NOTE: The rear disc brake rotor must be machined while it is bolted to the rear hub (1109). The rear disc brake rotor and rear hub are mounted as an assembly on the rotor lathe, and then the rear disc brake rotor is machined. Machining the rear disc brake rotor separately and then bolting it back onto the rear hub can cause rear disc brake rotor runout.

   If the rear disc brake rotor has deep scratches or grooves, runout (warped rear disc brake rotor) or incorrect parallelism (thickness variation), it must be resurfaced off the vehicle on a rotor lathe as follows.
   a. Remove the wheel.
   b. Remove the disc brake caliper and support it by a piece of wire. Refer to Section 06-04.
   c. Remove the rotor and rear hub assembly from the vehicle. Refer to Section 06-04.
   d. Resurface the rear disc brake rotor on a rotor lathe. Follow the manufacturer's instructions for the rear disc brake rotor refinishing equipment being used. Minimum thickness for the rear disc brake rotor is 36.3 mm (1.43 inch).

Service Limits

WARNING: NEVER INSTALL A FRONT DISC BRAKE ROTOR THAT HAS BEEN TURNED TO MINIMUM WEAR OR DISCARD THICKNESS.

Measure the thickness of the front disc brake rotor to determine if it is within specifications listed at the end of this section. Front disc brake rotor minimum (discard) thickness is stamped on the front disc brake rotor. Front disc brake rotors have a minimum thickness dimension (minimum wear thickness or discard thickness). This is not the refinishing dimension.

Brake Drum

Refinishing

Minor scores on a brake drum (1126) can be removed with sandpaper. Do not refinish brake drums to remove score marks. A drum surface which is highly polished can cause the brake to lock up. This polished condition should be removed either with sandpaper or by refinishing the drum. A brake drum that is out-of-round sufficiently enough to cause vehicle vibration or noise when braking must be refinished. Remove only enough stock to true-up the brake drum. Brake drum maximum inside diameter is shown on each brake drum. If the maximum inside diameter shown on the brake drum is exceeded either through wear or refinishing, the brake drum must be replaced.

Check the inside diameter of the brake drum with Brake Adjustment Gauge D81L-1103-A or Rotunda Brake Drum Micrometer 104-00046 or equivalent.

After a brake drum is refinished, wipe the refinished surface with a cloth soaked in clean denatured alcohol. If one brake drum is refinished, the opposite brake drum on the same axle must also be refinished to the same diameter.

ADJUSTMENTS (Continued)

Service Limits

Brake drum maximum diameter is molded into the rim of the brake drum. The brake drum can be machined enough to correct scoring but only up to the MAX. DIA. dimension. If, after machining, the brake drum inside braking surface diameter exceeds the specification, it must be discarded.

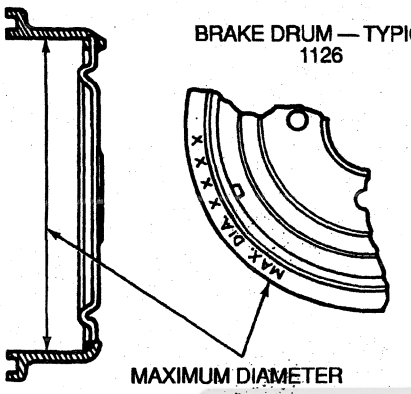

SPECIFICATIONS

BRAKE SYSTEM COMPONENT SPECIFICATIONS — F-250 HEAVY DUTY

Front Disc — Type	Dual-Piston, Floating Caliper
Front Disc — Size	330 mm (12.99 Inch)
Rear Drum — Type	Self-Adjusting
Rear Drum — Size	304.8 x 76.2 mm (12.0 x 3.0 Inch)
Power Assist Unit — Type	Dual-Diaphragm
Power Assist Unit — Effective Diameter	341.9 mm (13.46 Inch)
Anti-Lock System	Rear Wheel
Parking Brake (Rear Brakes)	Foot-Operated, Push On / Push Off Release

BRAKE SYSTEM COMPONENT SPECIFICATIONS — F-350

Front Disc — Type	Dual-Piston, Floating Caliper
Front Disc — Size	330 mm (12.99 Inch)
Rear Drum — Type	Self-Adjusting
Rear Drum — Size (SRW)	304.8 x 76.2 mm (12 x 3.0 Inch)
Rear Drum — Size (DRW)	307.97 x 88.9 mm (12.125 x 3.5 Inch)
Power Assist Unit — Type	Dual-Diaphragm
Power Assist Unit — Effective Diameter	341.9 mm (13.46 Inch)
Anti-Lock System	Rear Wheel
Parking Brake (Rear Brakes)	Foot-Operated, Push On / Push Off Release

BRAKE SYSTEM COMPONENT SPECIFICATIONS — F-SUPER DUTY

Front / Rear Disc — Type	Dual-Piston, Floating Caliper
Front / Rear Disc — Size	325.9 mm (12.83 In.)
Power Assist Unit — Type	Hydro-Boost
Power Assist Unit — Power Piston Diameter	39.6 mm (1.56 In.)
Parking Brake (Rear Brakes)	Foot-Operated, Hand Release[a]

a 4x2 commercial stripped chassis, dual rear wheel is equipped with hand operated, Orschein lever.

LUBRICANT / ADHESIVE / CLEANER SPECIFICATIONS

Description	Part Number	Ford Specification
Silicone Brake Caliper Grease and Dielectric Compound	D7AZ-19A331-A (Motorcraft WA-10)	ESE-M1C171-A
High Performance DOT 3 Brake Fluid	C6AZ-19542-AA	ESA-M6C25-A or DOT 3
Metal Brake Parts Cleaner	F2ZZ-19579-AA	—

TORQUE SPECIFICATIONS

Description	N·m	Lb-Ft
Brake Master Cylinder-to-Brake Tube Fitting (Rear)	15-20	11-15
Brake Master Cylinder-to-Brake Tube Fitting (Front)	22-28	16-21
Front Disc Brake Caliper Mounting Bolts	170-230	126-169
Brake Load Sensor Proportioning Brake Master Cylinder Valve Shaft Nut	15-20	11-15
Rear Brake Hose to Load Sensor Proportioning Valve Bolt	23-34	17-25
Load Sensor Proportioning Valve Bracket to Frame Bolt	26-41	19-30
Load Sensor Proportioning Valve Bracket to Valve Bolt	30-40	22-30
Load Sensor Proportioning Valve Linkage to Axle Nut	34-46	25-34
Front Disc Brake Caliper Anchor Plate Bolts	191-259	141-190

SPECIAL SERVICE TOOLS / EQUIPMENT

SPECIAL SERVICE TOOLS REQUIRED

Tool Number / Description	Illustration
T90T-2588-A Height Sensor Proportioning Valve Indexing Tool	T90T-2588-A

Official Licensed Product
Ford Motor Company

SPECIAL SERVICE TOOLS/EQUIPMENT (Continued)

SPECIAL SERVICE TOOLS DESIRED

Tool Number	Description
D78P-4201-B	Dial Indicator/Magnetic Base
D81L-1103-A	Brake Adjustment Gauge
D85T-33610-A	Adapter
TOOL-4201-C	Dial Indicator with Bracketry

ROTUNDA EQUIPMENT

Model	Description
104-00046	Brake Drum Micrometer
014-00230	Truck Medium/Heavy Duty Power Steering Analyzer
014-R1054	Vacuum Tester
164-R0253	Vacuum/Pressure Tester

Official Licensed Product
Ford Motor Company

SECTION 06-02 Brakes, Rear Drum

SUBJECT	PAGE
VEHICLE APPLICATION	06-02-1
DESCRIPTION AND OPERATION	
Brake Shoe Automatic Adjustment	06-02-1
Brake System, Drum	06-02-1
Hubs and Bearing	06-02-1
DIAGNOSIS AND TESTING	
Brakes, Rear Drum	06-02-2
REMOVAL AND INSTALLATION	
Brake Backing Plate	06-02-7
Brake Drum	06-02-2
Brake Shoes and Linings	06-02-3
Wheel Cylinder	06-02-7
Wheel Hub Bolt	06-02-2
DISASSEMBLY AND ASSEMBLY	
Self Adjuster	06-02-7
Wheel Cylinder	06-02-7
SERVICE PROCEDURES	
Drum Refinishing	06-02-8
CLEANING AND INSPECTION	
Cleaning	06-02-9
Inspection	06-02-9
Adjuster	06-02-9
Brake Backing Plate	06-02-9
Brake Drums	06-02-9
Brake Lining	06-02-9
Rear Wheel Cylinders	06-02-9
Springs	06-02-9
ADJUSTMENTS	
Bleeding Brakes	06-02-11
Brake Shoe and Lining	06-02-10
Drums Installed	06-02-11
Drums Removed	06-02-10
Brake Shoe, Initial Setting	06-02-11
Brake Shoe, Periodic	06-02-11
SPECIFICATIONS	06-02-11
SPECIAL SERVICE TOOLS/EQUIPMENT	06-02-12

Official Licensed Product
Ford Motor Company

VEHICLE APPLICATION

F-250 Heavy Duty and F-350 4x2 and 4x4 Vehicles

DESCRIPTION AND OPERATION

Brake System, Drum

The rear brakes are drum-type with internal shoes that expand against the brake drum (1126) when the brakes are applied. The rear drum brakes are of the single-anchor type, mounted to the same anchor, and actuated by one rear wheel cylinder (2261). The wheel cylinder has two pistons. One piston exerts force against the upper end of the primary shoe; the other against the upper end of the secondary shoe.

Hubs and Bearing

Refer to appropriate axle section in Group 05 in the Powertrain, Drivetrain Manual.

Brake Shoe Automatic Adjustment

The rear brake shoes are automatically adjusted when the vehicle is driven in a reverse direction and the brakes are applied sharply several times. Manual brake adjustment is required only after the brake shoes have been relined or replaced, or when the adjusters are not operating properly.

DIAGNOSIS AND TESTING

Brakes, Rear Drum

Refer to Section 06-00.

REMOVAL AND INSTALLATION

Wheel Hub Bolt

SPECIAL SERVICE TOOL(S) REQUIRED

Description	Tool Number
C-Frame and Clamp Assembly	T74P-3044-A1

Removal

1. Raise and support the vehicle.
2. Remove the wheel and tire assembly.
3. Remove the brake drum (1126) from the axle shaft or lug bolts (1107).

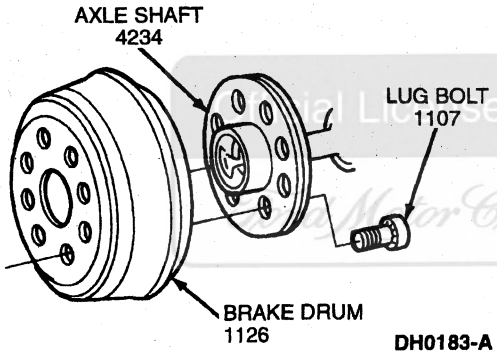

DH0183-A

4. **CAUTION: Never use a hammer to remove the stud. Damage to the hub or bearing can result.**

   Using C-Frame and Clamp Assembly T74P-3044-A1, press the lug bolt from its seat in the rear hub (1109). The lug bolt can also be removed by pressing it out using an appropriate sized socket and C-clamp. Discard the lug bolt.

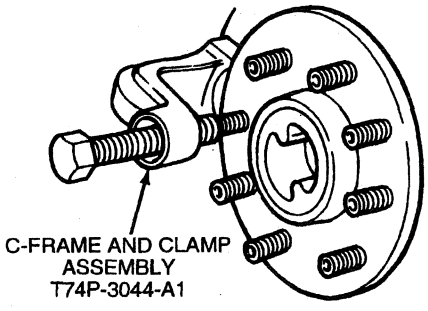

DH0184-A

Installation

1. Insert new wheel hub bolt in hole in axle shaft (4234) or rear hub. Rotate lug bolt slowly, aligning serrations with those made by the original lug bolt.
2. Place four flatwashers over the outside end of the lug bolt and thread the lug nut (1012) with the flat side against the washers.

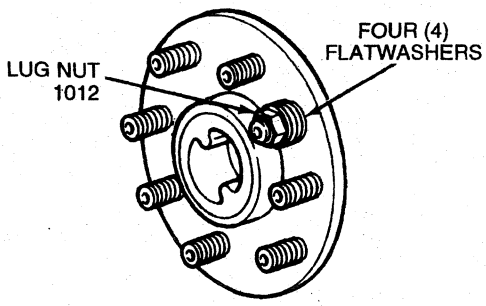

DH0185-A

3. **CAUTION: Do not use air tools; serrations can be stripped from the stud.**

   Tighten the lug nut until the lug bolt head seats against the back side of the shaft or hub.
4. Remove lug nut and washers.
5. Install brake drum and wheel (1007).
6. Lower the vehicle.

Brake Drum

WARNING: DO NOT INHALE DUST FROM BRAKES OR ASSOCIATED COMPONENTS. INHALATION OF DUST CAN BE HAZARDOUS TO YOUR HEALTH AND CAN CAUSE CANCER OR ASBESTOSIS. COMPRESSED AIR OR BRUSHES MUST NOT BE USED TO CLEAN BRAKES, BRAKE DRUMS (1126) OR ASSOCIATED COMPONENTS. A VACUUM CLEANER SUCH AS ROTUNDA BRAKE/CLUTCH/SERVICE VACUUM 164-R3600 OR EQUIVALENT EQUIPPED FOR THIS PURPOSE SHOULD BE CAREFULLY USED TO REMOVE DUST. ADHERENT DUST MUST BE REMOVED WITH A DAMP RAG. DUST MUST BE CONTAINED IN A SEALED AND LABELED BAG FOR DISPOSAL. WEAR AN APPROVED HIGH EFFICIENCY CARTRIDGE OR AIR LINE RESPIRATOR AND USE EXTRA CAUTION TO AVOID BREATHING DUST.

Removal

1. Raise the vehicle so the tire and wheel (1007) are clear of the floor and install safety stands under the axle.
2. Remove the hub cap (if so equipped), tire and wheel.

Ford Motor Company Licensed Product

REMOVAL AND INSTALLATION (Continued)

3. **CAUTION: Use of a drum puller or a torch is not recommended. Drum distortion can result.**

   Remove the spring retaining nuts and discard. Remove the brake drum.

4. If the brake drum is rusted to the axle shaft pilot diameter, use coarse sandpaper to remove the rust buildup, then remove the brake drum.

   If the brake drum will not come off, perform the following:

   a. Insert a narrow screwdriver through the brake adjusting hole in the brake backing plate (2211), and disengage the brake shoe adjusting lever (2A176) from the brake adjuster screw (2041).

   b. While holding the brake shoe adjusting lever away from the brake adjuster screw, loosen the brake adjuster screw with the Brake Adjustment Tool D81L-1103-C or equivalent.

   c. **CAUTION: Do not burr, chip, or damage the notches in the brake adjuster screw or the self-adjusting mechanism will not function properly.**

      Loosen the brake adjuster screw only if the brake drum cannot be removed.

   d. If the brake adjuster screw was loosened, check to be sure the brake shoe adjusting lever is still properly seated in the shoe web.

Retracting Brake Shoes, Rear

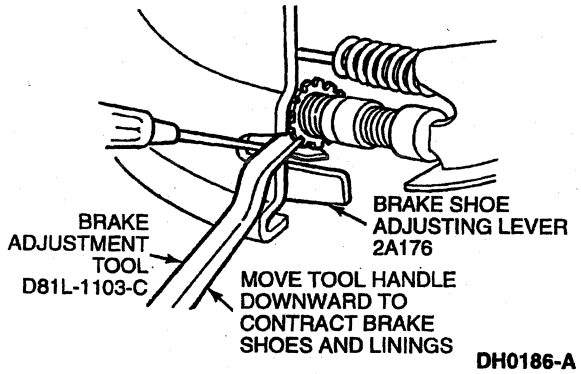

5. Check the surface of the brake drum. If worn, or if brake drum is suspected of having excessive runout, the brake drum should be machined. After machining, check maximum diameter of the brake drum. Brake drum must be replaced if diameter is outside maximum limit. Maximum drum diameter is stamped on the outside of the brake drum.

Installation

1. Remove the protective coating from a new brake drum with Metal Brake Parts Cleaner F3AZ-19579-SA or equivalent.
2. Adjust the brakes. Refer to Adjustments in this section.
3. Install the brake drum onto the axle shaft flange or rear hub (1109).
4. Install the wheel on rear hub studs against the brake drum, and tighten the retaining nuts to specification listed in the Wheel Torque Specifications chart at the end of this section.

Brake Shoes and Linings

Removal

1. Raise the vehicle so the wheels (1007) clear the floor, and install safety stands under the rear axle (4001).
2. Remove the wheel and brake drum (1126). Go to Step 4. If the brake drum does not clear the rear brake shoes and linings (2200), go to Step 3.
3. NOTE: Some brake drums will not come off easily.

   Using a screwdriver, move the brake shoe adjusting lever (2A176) off the brake shoe adjusting screw nut (2047) and, using Brake Adjustment Tool D81L-1103-C or equivalent, loosen brake shoe adjusting screw nut to obtain clearance for brake drum removal.

   Remove the brake drum.

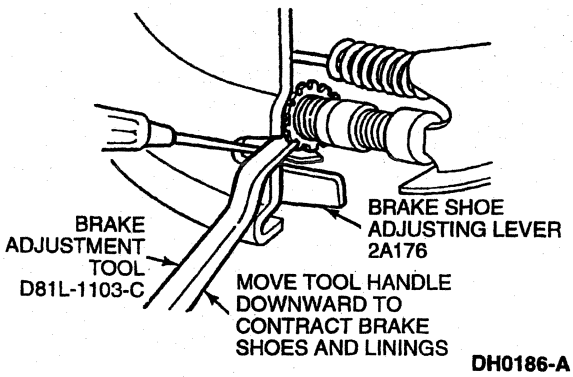

4. NOTE: A small amount of brake fluid is always present and acts as a lubricant for the wheel cylinder piston.

   Inspect:

   - the rear wheel cylinder (2261) for excessive leakage that can contaminate brake system parts, and rebuild as necessary.
   - rear brake shoes and linings for contamination, and replace as necessary.

REMOVAL AND INSTALLATION (Continued)

- rear brake shoes and linings for minimum thickness, and replace as necessary.
- springs for heat discoloration, and replace as necessary.

5. NOTE: Brake drum maximum inside diameter is molded into the face of the brake drum.

   Using Rotunda Brake Drum Micrometer 104-00046 or equivalent, measure the brake drum inside diameter.

   Replace brake drum if maximum inside diameter is exceeded.

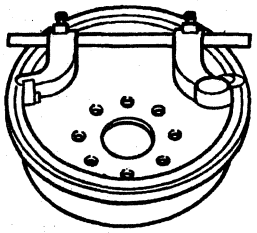

DH0187-A

6. Remove the brake shoe retracting spring (2296).
7. Remove the parking brake lever bolt lock nut, at the back of the brake backing plate (2211), and the parking brake lever bolt.
8. Remove the parking brake rear cable and conduit (2A635) from the parking brake lever (2A637) and remove the parking brake lever.
9. Disconnect the brake shoe adjusting lever cable (2A178) from the brake shoe adjusting lever and remove the brake shoe adjusting lever cable.
10. Remove the cable guide.
11. Remove the adjusting lever return spring and the brake shoe adjusting lever.
12. Remove the brake shoe adjusting screw spring (2049).
13. Remove the brake adjuster screw assembly.

Automatic Adjuster Components (Axle Shaft Shown Removed for Clarity Only)

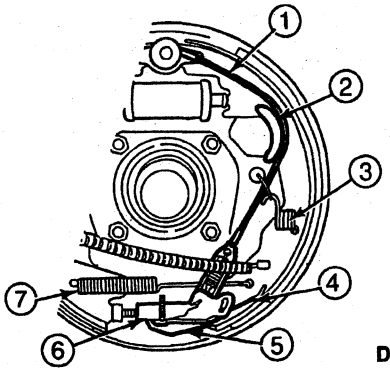

DH0188-A

Item	Part Number	Description
1	2A178	Brake Shoe Adjusting Lever Cable
2	2A179	Cable Guide
3	2068	Brake Shoe Hold-Down Spring
4	2A180	Adjusting Lever Return Spring
5	2A176	Brake Shoe Adjusting Lever
6	2047	Brake Adjuster Screw Assy
7	2049	Brake Shoe Adjusting Screw Spring

14. Remove brake shoe anchor pin guide plate (2028).
15. Remove the brake shoe hold-down springs (2068), the brake shoe hold-down spring pins (2069) and the rear brake shoes and linings.

Installation

1. Lubricate the brake backing plate friction points. Use Silicone Brake Caliper Grease and Dielectric Compound D7AZ-19A331-A (Motorcraft WA-10) or an equivalent silicone compound meeting Ford specification ESE-M1C171-A.
2. Position the rear brake shoes and linings and install the brake shoe hold-down spring pins and the brake shoe hold-down springs.
3. Install the brake shoe anchor pin guide plate.
4. NOTE: To prevent incorrect installation, the socket end of each brake adjuster screw (2041) is stamped R or L.

   Apply Silicone Brake Caliper Grease and Dielectric Compound D7AZ-19A331-A (Motorcraft WA-10) or an equivalent silicone compound meeting Ford specification ESE-M1C171-A and assemble the brake adjuster screw assembly.
5. Position the brake adjuster screw assembly.
6. Install the brake shoe adjusting screw spring.
7. Position the brake shoe adjusting lever cable.

REMOVAL AND INSTALLATION (Continued)

8. Install the cable guide.
9. Position the adjusting lever return spring and the brake shoe adjusting lever and hook the brake shoe adjusting lever cable to the brake shoe adjusting lever.

Automatic Adjuster Components (Axle Shaft Shown Removed for Clarity Only)

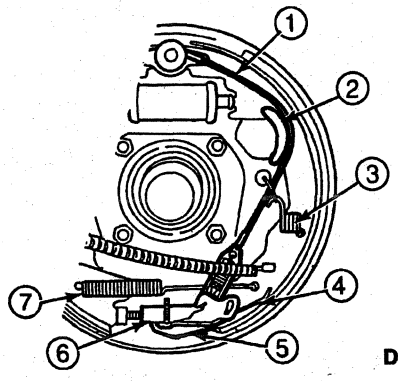

DH0188-A

Item	Part Number	Description
1	2A178	Brake Shoe Adjusting Lever Cable
2	2A179	Cable Guide
3	2068	Brake Shoe Hold-Down Spring
4	2A180	Adjusting Lever Return Spring
5	2A176	Brake Shoe Adjusting Lever
6	2047	Brake Adjuster Screw Assy
7	2049	Brake Shoe Adjusting Screw Spring

10. Test the operation of the automatic self-adjuster.
    a. Pull the brake shoe adjusting lever cable and check that the brake shoe adjusting lever rotates the brake shoe adjuster assembly.
    b. Release the brake shoe adjusting lever cable and check that the brake shoe adjusting lever advances to the next notch on the brake shoe adjusting screw nut.
11. Install the parking brake lever.
    a. Attach the parking brake rear cable and conduit to the parking brake lever and position the parking brake lever.
    b. Install the parking brake lever bolt and, at the back of the brake backing plate, the parking brake lever bolt lock nut.
12. Install the brake shoe retracting spring.
13. Adjust the brakes. Refer to Brake Shoe and Lining in the Adjustments portion of this section.
14. NOTE: The brake drum spring nut is not necessary for installation.
    Install the brake drum.
15. Install the tire and wheel assembly.

Self-Adjusting Brake Assemblies

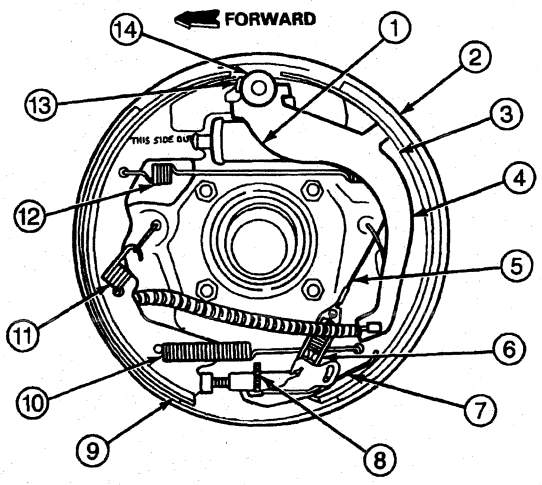

REAR BRAKE (LEFT SIDE)

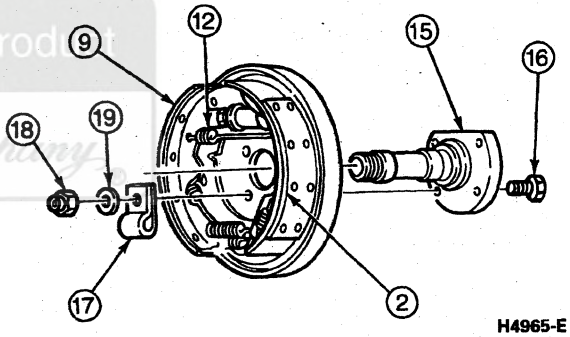

H4965-E

Item	Part Number	Description
1	2261	Rear Wheel Cylinder
2	2200	Rear Brake Shoe and Lining, Secondary
3	2A179	Cable Guide
4	2A637	Parking Brake Lever
5	2A178	Brake Shoe Adjusting Lever Cable
6	—	Over-Travel Spring (Part of 2A178)
7	2A176	Brake Shoe Adjusting Lever
8	2047	Brake Shoe Adjusting Screw Nut
9	2200	Rear Brake Shoe and Lining, Primary
10	2049	Brake Shoe Adjusting Screw Spring
11	2068	Brake Shoe Hold-Down Spring
12	2296	Brake Shoe Retracting Spring

(Continued)

REMOVAL AND INSTALLATION (Continued)

Item	Part Number	Description
13	2028	Brake Shoe Anchor Pin Guide Plate
14	2027	Parking Brake Lever Bolt
15	4001	Rear Axle
16	2248	Bolt

(Continued)

Item	Part Number	Description
17	384568-S100	Retainer Clamp (DRW Vehicles Use Retaining Bracket)
18	34449-S312	Nut
19	351453-S8	Washer

Rear Web Ledge Single Anchor Brake, Disassembled

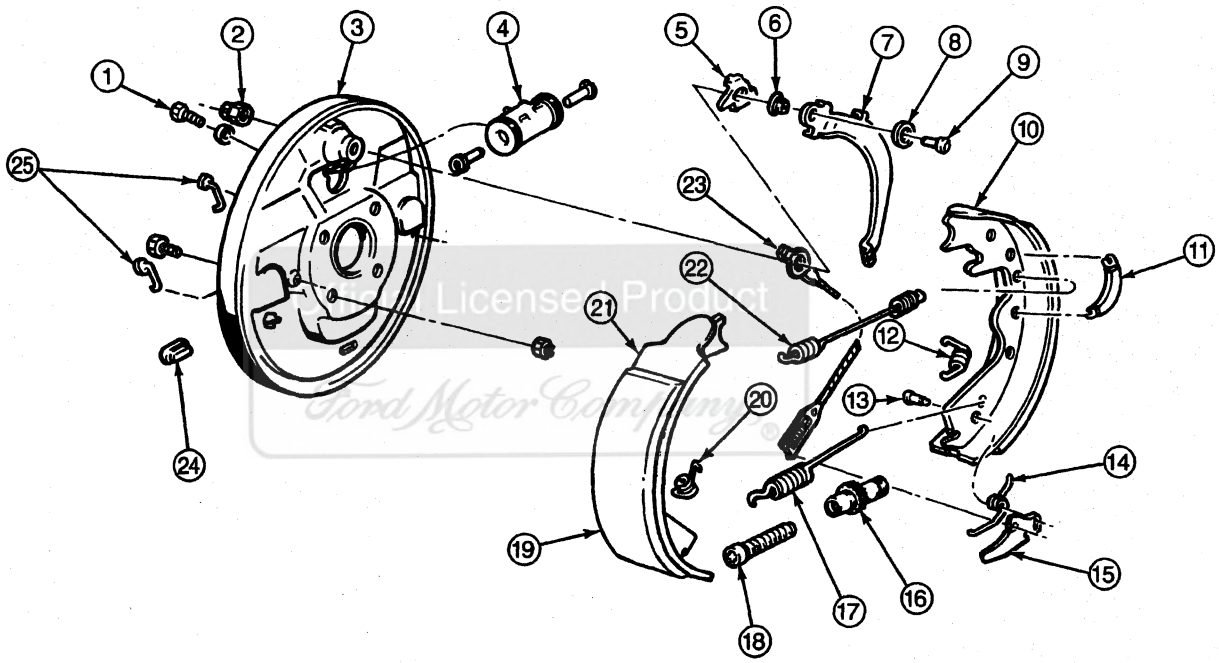

Licensed Product
Ford Motor Company

H1430-L

Item	Part Number	Description
1	20310-S	Rear Wheel Cylinder Retaining Bolt (2 Req'd)
2	55690-S7	Lock Nut
3	2211	Brake Backing Plate
4	2262	Rear Wheel Cylinder
5	2A642	Primary Brake Shoe Parking Brake Lever Link
6	2A601	Parking Brake Link Spring
7	2A637	Rear Parking Brake Lever
8	2106	Parking Brake Lever Pin Retainer
9	2027	Parking Brake Lever Bolt
10	2200	Rear Brake Shoe and Lining, Secondary
11	2A179	Cable Guide

(Continued)

Item	Part Number	Description
12	2068	Brake Shoe Hold-Down Spring
13	2108	Adjusting Lever Pin
14	2A180	Adjusting Lever Return Spring
15	2A176	Brake Shoe Adjusting Lever
16	2047	Brake Shoe Adjusting Screw Nut
17	2049	Brake Shoe Adjusting Screw Spring
18	2041	Brake Adjuster Screw
19	—	Primary Shoe Lining (Part of 2200)
20	2068	Brake Shoe Hold-Down Spring

(Continued)

REMOVAL AND INSTALLATION (Continued)

Item	Part Number	Description
21	2200	Rear Brake Shoe and Lining, Primary
22	2296	Brake Shoe Retracting Spring

(Continued)

Item	Part Number	Description
23	2A178	Brake Shoe Adjusting Lever Cable
24	2092	Brake Adjusting Hole Cover
25	2069	Brake Shoe Hold-Down Spring Pin

Wheel Cylinder

Removal

1. Raise vehicle on hoist and position suitable safety stands under vehicle.
2. Remove wheel (1007).
3. Remove the brake drum (1126) and rear brake shoes and linings (2200). Remove the wheel cylinder brake shoe links (2042).
4. Disconnect the rear brake tube (2267) from the rear wheel cylinder (2261).
5. Remove the wheel cylinder retaining bolts and lockwashers, and then remove the rear wheel cylinder from the brake backing plate (2211).

Installation

1. Place the rear wheel cylinder on the brake backing plate and install the retaining bolts and lockwashers.
2. Connect the rear brake tube to the rear wheel cylinder.
3. Install the rear brake shoes and linings and the wheel cylinder brake shoe links.
4. Install the brake drum and the wheel.
5. Adjust the brakes as described in this section.
6. Bleed the system. Refer to Section 06-06.
7. Check brake operation before moving the vehicle.

Brake Backing Plate

Removal

1. Remove axle and rear hub assembly. Refer to Section 05-02A in the Powertrain, Drivetrain Manual.
2. Remove the rear brake shoes and linings (2200) and rear wheel cylinder (2261).
3. Disconnect the parking brake lever (2A637) from the cable.
4. Remove the brake backing plate (2211).

Installation

1. Position the brake backing plate on the retaining bolts in the axle housing flange.
2. Install the rear wheel cylinder and rear brake shoes and linings. Connect the parking brake cable to the parking brake lever.
3. Connect the rear brake tube (2267) to the rear wheel cylinder, and bleed air from the system. Refer to Section 06-06.
4. Install rear hub, brake drum and axle shaft. Refer to Section 05-02A in the Powertrain, Drivetrain Manual.

DISASSEMBLY AND ASSEMBLY

Self Adjuster

1. Remove and disassemble brake adjuster screw (2041).
2. Apply Silicone Brake Caliper Grease and Dielectric Compound D7AZ-19A331-A (Motorcraft WA-10) or equivalent meeting Ford Specification ESE-M1C171-A to the threads and the socket end of the brake adjuster screw. Turn the brake adjuster screw into the brake shoe adjusting screw nut (2047) to the end of the threads and then loosen it one half turn.
3. Place the adjusting socket on the brake adjuster screw, and install the assembly between the ends of the rear brake shoe and lining (2200) with the brake adjuster screw nearest the primary rear brake shoe and lining.

Wheel Cylinder

Disassembly

1. Remove the rubber boots from the ends of the brake cylinder.
2. Remove the pistons, cups, and wheel cylinder piston cup spring (2204) from the rear wheel cylinder (2261).
3. Remove the wheel cylinder bleeder screw (2208) from the rear wheel cylinder.

DISASSEMBLY AND ASSEMBLY (Continued)

Double Servo Rear Brake Wheel Cylinder

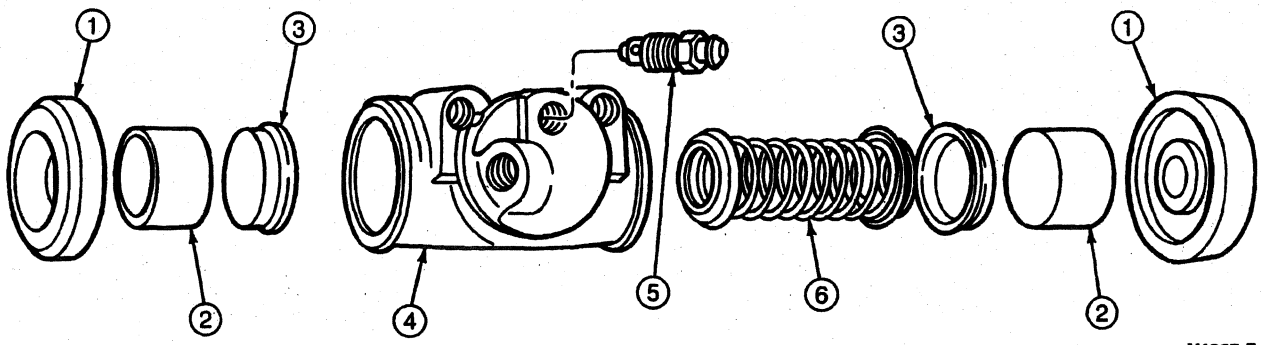

H1385-E

Item	Part Number	Description
1	—	Boot (Part of 2261 [RH], 2262 [LH])
2	—	Piston (Part of 2261 [RH], 2262 [LH])
3	—	Cup (Part of 2261 [RH], 2262 [LH])

(Continued)

Item	Part Number	Description
4	—	Wheel Cylinder Body (Part of 2261 [RH], 2262 [LH])
5	—	Bleeder (Part of 2261 [RH], 2262 [LH])
6	—	Spring (Part of 2261 [RH], 2262 [LH])

Official Licensed Product
Ford Motor Company

Assembly

1. Coat all brake cylinder parts with clean Ford High Performance DOT 3 Brake Fluid C6AZ-19542-AA or equivalent DOT 3 fluid meeting Ford specification ESA-M6C25-A.
2. Install the wheel cylinder bleeder screw in the rear wheel cylinder.
3. Place the wheel cylinder piston cup spring, cups, and pistons in the rear wheel cylinder.
4. NOTE: When using a brake cylinder repair kit follow the instructions in the kit and use all of the parts provided.

   Install a boot and wheel cylinder brake shoe link (2042) over each end of the rear wheel cylinder. Clamp the pistons against the ends of the rear wheel cylinder.

SERVICE PROCEDURES

Drum Refinishing

Minor scores on a brake drum (1126) can be removed with sandpaper. Do not refinish brake drums to remove score marks. A drum surface that is highly polished can cause the brake to lock up. This polished condition should be removed either with sandpaper or by refinishing the drum.

A brake drum that is out of round enough to cause vehicle vibration or noise when braking should be refinished. Remove only enough stock to true-up the brake drum.

Brake drum maximum inside diameter is shown on each brake drum. If the maximum inside diameter shown on the brake drum is exceeded either through wear or refinishing, the brake drum must be replaced.

Check the inside diameter of the brake drum with Brake Adjustment Gauge D81L-1103-A or Rotunda Brake Drum Micrometer 104-00046 or equivalent.

After a brake drum is refinished, wipe the refinished surface with a cloth soaked in clean denatured alcohol. If one brake drum is refinished, the opposite brake drum on the same axle must be refinished to the same diameter.

CLEANING AND INSPECTION

Cleaning

WARNING: DO NOT INHALE DUST FROM BRAKES OR ASSOCIATED COMPONENTS. INHALATION OF DUST CAN BE HAZARDOUS TO YOUR HEALTH AND CAN CAUSE CANCER OR ASBESTOSIS. COMPRESSED AIR OR BRUSHES MUST NOT BE USED TO CLEAN BRAKES, BRAKE DRUMS (1126) OR ASSOCIATED COMPONENTS. A VACUUM CLEANER SUCH AS ROTUNDA BRAKE/CLUTCH/SERVICE VACUUM 164-R3600 OR EQUIVALENT EQUIPPED FOR THIS PURPOSE SHOULD BE CAREFULLY USED TO REMOVE DUST. ADHERENT DUST MUST BE REMOVED WITH A DAMP RAG. DUST MUST BE CONTAINED IN A SEALED AND LABELED BAG FOR DISPOSAL. WEAR AN APPROVED HIGH EFFICIENCY CARTRIDGE OR AIR LINE RESPIRATOR AND USE EXTRA CAUTION TO AVOID BREATHING DUST.

Inspection

Rear Wheel Cylinders

Wheel cylinders should not be disassembled unless they are leaking. Carefully pull lower edges of wheel cylinder boots away from cylinders to see if the interior of the cylinder is wet with brake fluid. Excessive fluid at this point indicates leakage past piston cups and a need for wheel cylinder overhaul.

NOTE: A slight amount of fluid is nearly always present and acts as a lubricant for the piston. It is not necessary to remove the brake cylinder from the backing plate to disassemble, inspect, hone and overhaul the cylinder. Removal is necessary only if the cylinder is damaged or scored beyond service.

Brake Drums

Minor scores on a brake drum (1126) can be removed with sandpaper. Do not refinish brake drums to remove score marks. A drum surface that is highly polished can cause the brake to lock up. This polished condition should be removed either with sandpaper or by refinishing the drum.

A brake drum that is out of round enough to cause vehicle vibration or noise when braking should be refinished. Remove only enough stock to true-up the brake drum.

Brake drum maximum inside diameter is shown on each brake drum. If the maximum inside diameter shown on the brake drum is exceeded either through wear or refinishing, the brake drum must be replaced.

Check the inside diameter of the brake drum with Brake Adjustment Gauge D81L-1103-A or Rotunda Brake Drum Micrometer 104-00046 or equivalent.

After a brake drum is refinished, wipe the refinished surface with a cloth soaked in clean denatured alcohol. If one brake drum is refinished, the opposite brake drum on the same axle must also be refinished to the same diameter.

Adjuster

Test the operation of the automatic self-adjuster.

1. Pull the brake shoe adjusting lever cable (2A178) and check that the brake shoe adjusting lever (2A176) rotates the brake shoe adjuster assembly.
2. Release the brake shoe adjusting lever cable and check that the brake shoe adjusting lever advances to the next notch on the brake shoe adjusting screw nut (2047).

If pulling the brake shoe adjusting lever cable does not produce the action described, or if lever action is sluggish instead of positive and sharp, check the position of the brake shoe adjusting lever on the adjusting screw toothed wheel. The brake shoe adjusting lever should contact the adjusting wheel one tooth below the centerline of the adjusting screw. If the contact point is above this centerline, the brake shoe adjusting lever will not lock on the teeth in the adjusting screw wheel, and the screw will not be turned as the brake shoe adjusting lever is actuated by the brake shoe adjusting lever cable.

Brake Lining

CAUTION: Failure to replace worn linings will result in a scored drum.

NOTE: When linings are replaced on one side, they must also be replaced on the wheel on the opposite side of the vehicle.

Brake linings must be replaced if contaminated with brake fluid, grease or oil, or if linings are worn to within 0.8 mm (1/32 inch) of a rivet head or 1.5 mm (1/16 inch) of the shoe on bonded linings.

NOTE: Whenever rear brake linings are removed, the parking brake cable tension should be checked.

Springs

Check condition of brake shoes, brake shoe retracting spring (2296), brake shoe hold-down springs (2068) and drum for signs of overheating. If shoes have a slight blue coloring indicating overheating, brake shoe retracting spring and brake shoe hold-down springs must be replaced. Overheated springs lose their tension and can cause new lining to drag and wear prematurely if not replaced.

Brake Backing Plate

Clean the ledge pads on the brake backing plate (2211). Sand lightly to bare metal.

Apply Silicone Brake Caliper Grease and Dielectric Compound D7AZ-19A331-A (Motorcraft WA-10) or equivalent meeting Ford Specification ESE-M1C171-A at the points where the rear brake shoe and lining (2200) touches the brake backing plate.

ADJUSTMENTS

Brake Shoe and Lining

WARNING: DO NOT INHALE DUST FROM BRAKES OR ASSOCIATED COMPONENTS. INHALATION OF DUST CAN BE HAZARDOUS TO YOUR HEALTH AND CAN CAUSE CANCER OR ASBESTOSIS. COMPRESSED AIR OR BRUSHES MUST NOT BE USED TO CLEAN BRAKES, BRAKE DRUMS (1126) AND ASSOCIATED COMPONENTS. A VACUUM CLEANER SUCH AS ROTUNDA BRAKE/CLUTCH/VACUUM 164-R3600 OR EQUIVALENT EQUIPPED FOR THIS PURPOSE SHOULD BE CAREFULLY USED TO REMOVE DUST. ADHERENT DUST MUST BE REMOVED WITH A DAMP RAG. DUST MUST BE CONTAINED IN A SEALED AND LABELED BAG FOR DISPOSAL. WEAR AN APPROVED HIGH EFFICIENCY CARTRIDGE OR AIR LINE RESPIRATOR AND USE EXTRA CAUTION TO AVOID BREATHING DUST.

After adjusting the rear brake shoes and linings (2200), check the brake shoe adjusting lever cables (2A178) for proper adjustment. Make sure the parking brake cable equalizer (2A602) operates freely. Refer to Section 06-05 for additional information.

Drums Removed

1. With brake drums removed, use Rotunda Brake/Clutch/Service Vacuum 164-R3600 or equivalent to remove any dust present on the brake assembly.
2. Carefully remove the brake shoe retracting springs (2296). Using sandpaper, clean the shoe-to-backing plate contact points while holding the rear brake shoe and lining away from the brake backing plate (2211).
3. Check brake backing plate for damage. If any damage is found, it must be replaced. Refer to Brake Backing Plate in the Removal and Installation portion of this section. If no damage is found, apply a small amount (0.80 mm [1/32 inch] thick) of Silicone Brake Caliper Grease and Dielectric Compound D7AZ-19A331-A (Motorcraft WA-10) or equivalent meeting Ford Specification ESE-M1C171-A to the ledges where the rear brake shoes and linings touch the brake backing plate. Be careful not to get the lubricant on the linings. Also lubricate the adjusting cable eye and the anchor pin area.
4. Reinstall brake shoe retracting springs.
5. Use Rotunda Brake Shoe Setting Gauge 104-00063 or equivalent to adjust the brake linings to the inside diameter of the drum braking surface.

Measuring Brake Drum

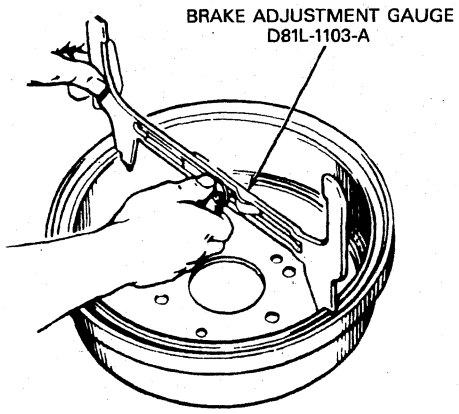

H1411-J

6. Reverse the tool and adjust the rear brake shoes and linings until they touch the gauge. The gauge contact points on the rear brake shoes and linings must be parallel to the vehicle with the centerline through the center of the axle.

Measuring Rear Brake Shoe and Lining

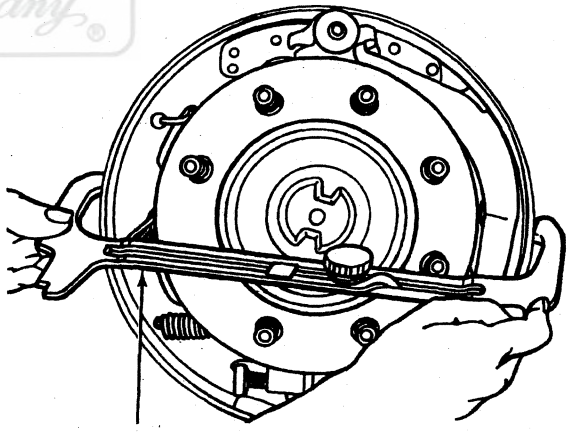

DH0189-A

7. Hold the brake shoe adjusting lever (2A176) out of engagement while rotating the adjusting screw (part of brake adjuster screw (2041)) to prevent burring the screw slots. Make sure the adjusting screw rotates freely.
8. If necessary, remove brake shoe adjusting lever from the brake assembly. Disassemble and clean the brake shoe adjusting lever. Lubricate the adjusting screw threads with a thin, uniform coating of Silicone Brake Caliper Grease and Dielectric Compound D7AZ-19A331-A (Motorcraft WA-10) or equivalent meeting Ford Specification ESE-M1C171-A.

Official Licensed Product
Ford Motor Company

ADJUSTMENTS (Continued)

9. Install the brake drums.
10. Install the wheels (1007) on the hubs or axle shaft flanges against the brake drums and tighten the wheel mounting nuts to specification listed in the Wheel Torque Specifications chart at the end of this section.
11. Complete the adjustment by applying the brakes sharply several times while driving the vehicle in reverse.
12. After adjusting the rear brake shoes and linings, check brake operation by making several stops while driving forward.

Drums Installed

1. Raise the vehicle until the tires clear the floor. Install safety stands under the axle.
2. Remove the brake adjusting hole cover (2092) at the bottom of the brake backing plate, and turn the brake adjuster screw (inside the hole) to expand the rear brake shoes and linings until they drag against the brake drum as shown.

Expanding Brake Shoes

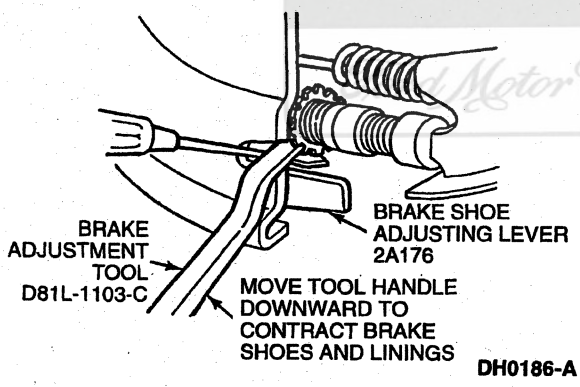

3. When the rear brake shoes and linings are against the brake drum, loosen the brake adjuster screw so the brake drum rotates freely without drag. If the brake drum does not rotate freely, remove the wheel and brake drum.
4. Using Rotunda Brake / Clutch / Service Vacuum 164-R3600 or equivalent, vacuum out any dust and dirt from the linings.
5. Remove brake shoe hold-down springs (2068).
6. Using sandpaper, remove any rust from the points where the rear brake shoes and linings touch the brake backing plate while holding rear brake shoes and linings away from brake backing plate.
7. Apply a light coating of Silicone Brake Caliper Grease and Dielectric Compound D7AZ-19A331-A (Motorcraft WA-10) or equivalent meeting Ford Specification ESE-M1C171-A to the contact areas of the brake backing plate. Do not get the lubricant on the linings.
8. Install brake shoe hold-down springs. Install the wheel and brake drum, and adjust the rear brake shoes and linings.
9. Install the brake adjusting hole cover on the brake backing plate.
10. Check and adjust the other brake assembly.
11. **WARNING: PERFORM THE ROAD TEST ONLY WHEN THE BRAKES WILL APPLY AND THE VEHICLE CAN BE STOPPED SAFELY.**

    Apply the brakes. If the brake pedal (2455) travels more than half-way to the floor, there is too much clearance between the rear brake shoes and linings and the brake drums. Repeat Steps 2 and 3 above.
12. When all rear brake shoes and linings have been adjusted properly, lower the vehicle and road test to check brake operation.

Brake Shoe, Initial Setting

Refer to Brake Shoe and Linings in the Adjustments portion of the section for brake shoe initial setting procedure.

Brake Shoe, Periodic

Rear drum brakes are adjusted automatically by driving the vehicle in reverse and sharply applying the brakes. Manual brake adjustment is required only when the rear brake shoes and linings are replaced or the adjusters are not functioning adequately.

Bleeding Brakes

Refer to Section 06-06.

SPECIFICATIONS

LUBRICANT/ADHESIVE/CLEANER SPECIFICATIONS

Description	Part Number	Ford Specification
Metal Brake Parts Cleaner	F3AZ-19579-SA	—
Silicone Brake Caliper Grease and Dielectric Compound	D7AZ-19A331-A (Motorcraft WA-10)	ESE-M1C171-A
High Performance DOT 3 Brake Fluid	C6AZ-19542-AA	ESA-M6C25-A and DOT 3A

SPECIFICATIONS (Continued)

BRAKE SPECIFICATIONS

Description	F-250	F-350/DRW[a]
Axle Usage — Front	4200 4600	4200 4600
Axle Usage — Rear	5400 6250	6340/7400/ 7800/8250
Type	DSSA	DSSA
Size (Inches)	12x3.0	12-1/8x3.5
Cylinder Diameter (Inches)[b]	1.0625	1.1875
Lining Thickness (Inches) — Primary	0.204	0.220
Lining Thickness (Inches) — Secondary	0.267	0.283
Lining Length (Inches) — Primary	11.40	11.57
Lining Length (Inches) — Secondary	12.86	13.05
Area per Brake (Sq. Inches) — Primary	38.46	40.49
Area per Brake (Sq. Inches) — Secondary	38.46	45.67
Total Area per Brake (Sq. Inches)	72.55	86.17
Total Area per Axle (Sq. Inches)	145.1	172.34
Swept Area per Axle (Sq. Inches)	226.20	266.64

a F-Super Duty use disc brakes in rear.
b Maximum allowable hone 0.003.

Brake Drum

Brake drums (1126) must be replaced if inside diameter is outside maximum limit. Maximum drum diameter is stamped on the outside of the brake drum.

WHEEL TORQUE SPECIFICATIONS

Description	N·m	Lb-Ft
8-Lug Wheel — 9/16-18	170-230	126-170

NOTE: Torque specifications are for clean, dry, dirt- and paint-free bolt and nut threads. Never use oil or grease on studs or nuts.

SPECIAL SERVICE TOOLS/EQUIPMENT

SPECIAL SERVICE TOOLS REQUIRED

Tool Number/ Description	Illustration
T74P-3044-A1 C-Frame and Clamp Assembly	 T74P-3044-A1

SPECIAL SERVICE TOOLS DESIRED

Tool Number	Description
D81L-1103-A	Brake Adjustment Gauge
D81L-1103-C	Brake Adjustment Tool

ROTUNDA EQUIPMENT

Model	Description
104-00046	Brake Drum Micrometer
104-00063	Brake Shoe Setting Gauge
164-R3600	Brake/Clutch/Service Vacuum

Official Licensed Product
Ford Motor Company

SECTION 06-03 Brakes, Front Disc

SUBJECT	PAGE
VEHICLE APPLICATION	06-03-1
DESCRIPTION AND OPERATION	
Brake Shoe and Linings	06-03-4
Brake System, Disc	06-03-1
Caliper, Heavy-Duty Pin Slider, F-250 Heavy Duty and F-350	06-03-4
Rotor	06-03-4
Rotor Shield	06-03-4
Wheel Hubs and Bearings	06-03-4
DIAGNOSIS AND TESTING	
Brakes, Front Disc	06-03-4
REMOVAL AND INSTALLATION	
Brake Shoe and Lining, Dual Piston	06-03-6
Front Disc Brake Caliper	06-03-5
Front Disc Brake Hub and Rotor	06-03-6
REMOVAL AND INSTALLATION (Cont'd.)	
Rotor Shield	06-03-7
Service Precautions	06-03-4
DISASSEMBLY AND ASSEMBLY	
Caliper, Dual Piston	06-03-7
SERVICE PROCEDURES	
Rotor Refinishing	06-03-8
CLEANING AND INSPECTION	
Brake Shoes and Linings	06-03-9
Caliper	06-03-8
Rotor	06-03-9
ADJUSTMENTS	
Hydraulic System Bleeding	06-03-9
SPECIFICATIONS	06-03-9
SPECIAL SERVICE TOOLS/EQUIPMENT	06-03-10

VEHICLE APPLICATION

F-250 Heavy Duty and F-350 4x2 and 4x4, and F-Super Duty Vehicles

Official Licensed Product
Ford Motor Company

DESCRIPTION AND OPERATION

Brake System, Disc

The front disc brake caliper is a dual pin sliding, dual piston type. The system has a dual brake master cylinder and front disc brake hub and rotor.

Disc Brake System, F-Super Duty Chassis Cab and Motorhome Chassis

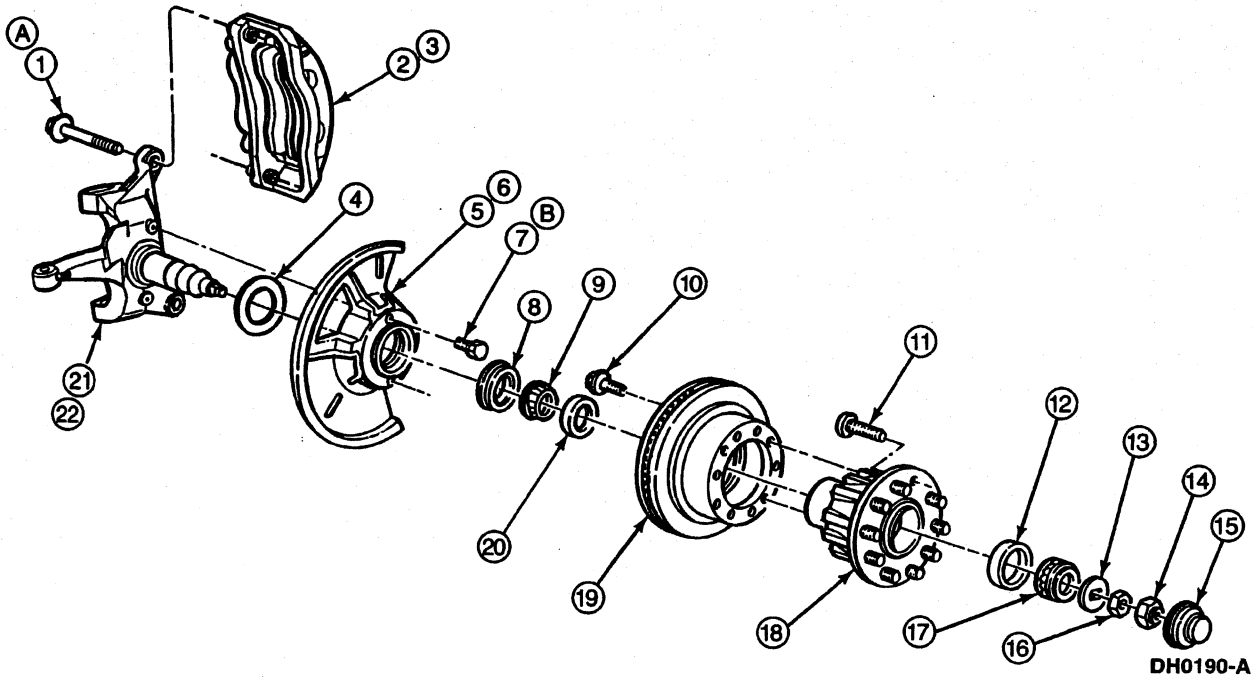

DH0190-A

DESCRIPTION AND OPERATION (Continued)

Item	Part Number	Description
1	807794-S60	Anchor Bracket Bolt, M16-2.0 x 50
2	2B120	Disc Brake Caliper (RH)
3	2B121	Front Disc Brake Caliper (LH)
4	2B160	Front Brake Splash Shield Gasket
5	2K004	Front Disc Brake Rotor Shield (RH)
6	2K005	Front Disc Brake Rotor Shield (LH)
7	N611171-S2	Screw
8	1190	Wheel Hub Grease Seal
9	4221	Front Wheel Inner Bearing Cone and Roller Assy
10	43090-S2	Screw
11	1107	Wheel Lug Nut Stud

(Continued)

Item	Part Number	Description
12	4222	Bearing Cup
13	1195	Front Wheel Outer Bearing Retainer Washer
14	374536-S	Nut Retainer
15	1131	Hub Grease Cap
16	374504-S	Spindle Nut
17	1216	Front Wheel Bearing
18	1104	Wheel Hub
19	1125	Front Disc Brake Rotor
20	4222	Bearing Cup
21	3105	Front Wheel Spindle (RH)
22	3106	Front Wheel Spindle (LH)
A	—	Tighten to 191-259 N·m (141-190 Lb-Ft)
B	—	Tighten to 7-16 N·m (62-141 Lb-In)

Official Licensed Product
Ford Motor Company

Disc Brake, F-250 Heavy Duty and F-350 4x2

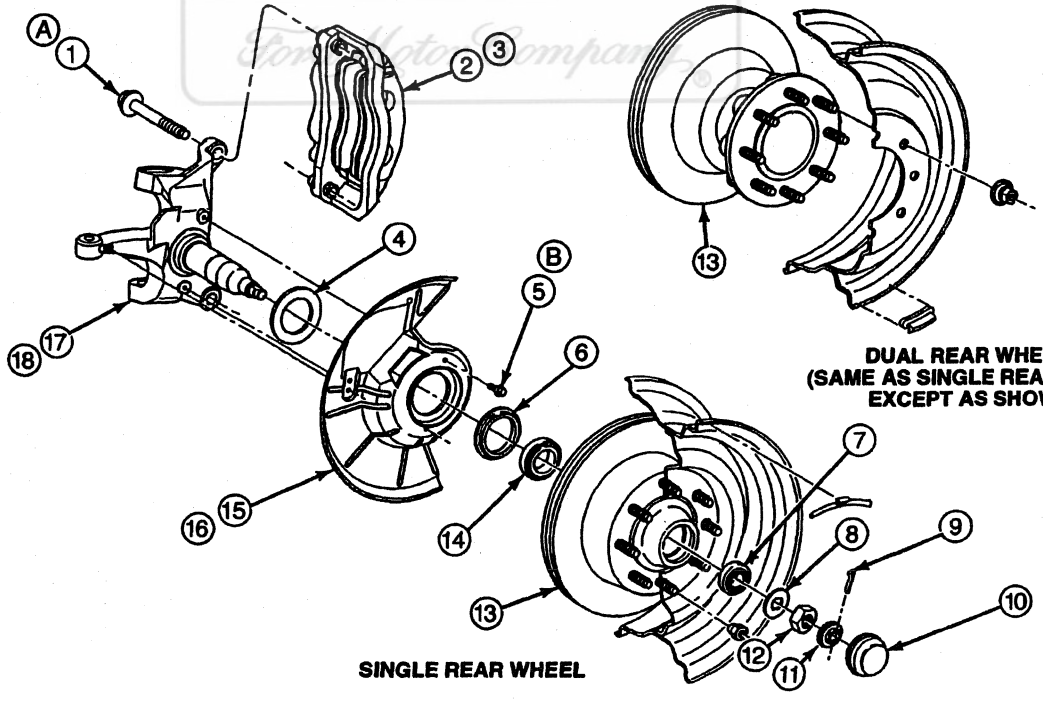

Item	Part Number	Description
1	N807794-S60	Anchor Bracket Bolt, M16-2.0 x 50
2	2B120	Disc Brake Caliper (RH)

(Continued)

Item	Part Number	Description
3	2B121	Front Disc Brake Caliper (LH)
4	2B160	Front Brake Splash Shield Gasket

(Continued)

DESCRIPTION AND OPERATION (Continued)

Item	Part Number	Description
5	N611171-S2	Screw, M6-1.0 x 10
6	1190	Wheel Hub Grease Seal
7	1216	Front Wheel Bearing
8	1195	Front Wheel Outer Bearing Retainer Washer
9	N642569-S36	Cotter Pin
10	1131	Hub Grease Cap
11	390622-S	Nut Retainer
12	374504-S100	Spindle Nut, 3/4-16
13	1102	Front Disc Brake Hub and Rotor
14	4221	Front Wheel Inner Bearing Cone and Roller Assy

(Continued)

Item	Part Number	Description
15	2K004	Front Disc Brake Rotor Shield (RH)
16	2K005	Front Disc Brake Rotor Shield (LH)
17	3105	Front Wheel Spindle Assy (RH)
18	3106	Front Wheel Spindle Assy (LH)
A	—	Tighten to 191-259 N·m (141-190 Lb-Ft)
B	—	Tighten to 9-13 N·m (80-115 Lb-In)

Official Licensed Product
Ford Motor Company

DESCRIPTION AND OPERATION (Continued)

Disc Brake System, F-250 Heavy Duty and F-350 4x4

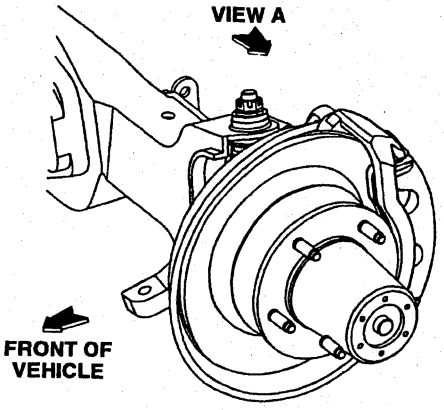

F-250 AND F-350 (F-250 SHOWN)

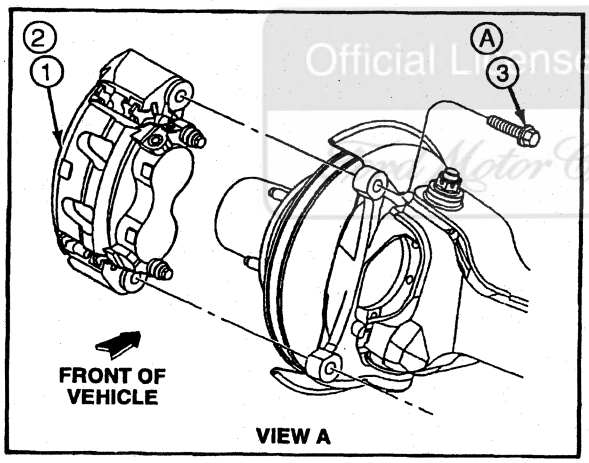

H10367-A

Item	Part Number	Description
1	2B120	Disc Brake Caliper (RH)
2	2B121	Front Disc Brake Caliper (LH)
3	N807794-S60	Bolt, M16-2.0 x 53
A	—	Tighten to 191-259 N·m (141-190 Lb-Ft)

Rotor

For F-250 Heavy Duty and F-350 4x2 vehicles, the front disc brake hub and rotor (1102) is an integrally cast assembly. The F-250 Heavy Duty and F-350 4x4 vehicles and F-Super Duty vehicles utilize separate wheel hubs (1104) and front disc brake rotors (1125), which are bolted together.

Wheel Hubs and Bearings

Refer to Section 04-01A or Section 04-01B.

Rotor Shield

A front disc brake rotor shield, bolted to the front wheel spindle, protects the bearings and inboard surface of the front disc brake hub and rotor from road splash. The wheel protects the outboard surface of the front disc brake hub and rotor and disc brake caliper.

Caliper, Heavy-Duty Pin Slider, F-250 Heavy Duty and F-350

The disc brake caliper is of the pin slider design, with two caliper pistons (2196) on the same side of the front disc brake hub and rotor. The unit consists of a disc brake caliper (2B120), which slides on two pins. The disc brake caliper assembly is bolted to an anchor bracket which is bolted to the front wheel spindle (3105).

The caliper contains the two caliper pistons. The caliper piston and caliper bores are protected by boot seals fitted to a groove in the caliper piston and a groove in the caliper housing. The anchor bracket mounting positions the disc brake caliper rearward over the front disc brake hub and rotor (1102).

Brake Shoe and Linings

The ends of the brake shoes and linings (2001) are contained within the spindle. The spindle abutments on each end provide a low drag surface for the pads to slide against. The brake caliper mounts over the top of the pads.

DIAGNOSIS AND TESTING

Brakes, Front Disc

Refer to Section 06-00.

REMOVAL AND INSTALLATION

Service Precautions

WARNING: BRAKE FLUID CONTAINS POLYGLYCOL ETHERS AND POLYGLYCOLS. AVOID CONTACT WITH EYES. WASH HANDS THOROUGHLY AFTER HANDLING. IF BRAKE FLUID CONTACTS EYES, FLUSH EYES WITH RUNNING WATER FOR 15 MINUTES. GET MEDICAL ATTENTION IF IRRITATION PERSISTS. IF TAKEN INTERNALLY, DRINK WATER AND INDUCE VOMITING. GET MEDICAL ATTENTION IMMEDIATELY.

Official Licensed Product Ford Motor Company

REMOVAL AND INSTALLATION (Continued)

Front Disc Brake Caliper

Removal

1. To avoid fluid overflow when the caliper pistons (2196) are pressed into the caliper bores, siphon or dip part of the brake fluid out of the brake master cylinder reservoir (2K478). Discard the removed fluid.
2. NOTE: When raising the vehicle make sure the hoist lift points do not rest on the caliper pins.

   Raise the vehicle on a hoist and install safety stands. Remove the wheel (1007) and tire.
3. NOTE: Do not use a screwdriver or similar tool to pry the caliper piston away from the front disc brake hub and rotor (1102).

   Place an appropriate size C-clamp on the disc brake caliper with end of clamp frame against caliper housing and end of clamp screw against outer shoe. Tighten the clamp to bottom the caliper pistons in the caliper bores. Remove the C-clamp.

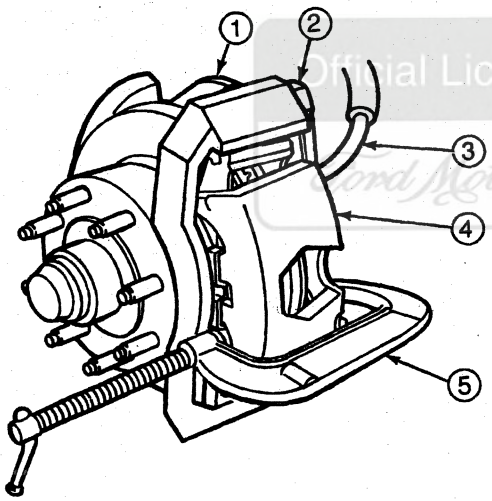

H8191-D

Item	Part Number	Description
1	2B292	Anchor Bracket
2	N807794-S60	Anchor Bolt, M16 x 2.0 x 50 (2 Req'd)
3	2078	Front Brake Hose
4	2B121	Disc Brake Caliper
5	—	C-Clamp

4. Remove both caliper slide pins. Examine the slide pins and caliper pin insulators to make sure that they are not damaged. Replace if necessary.

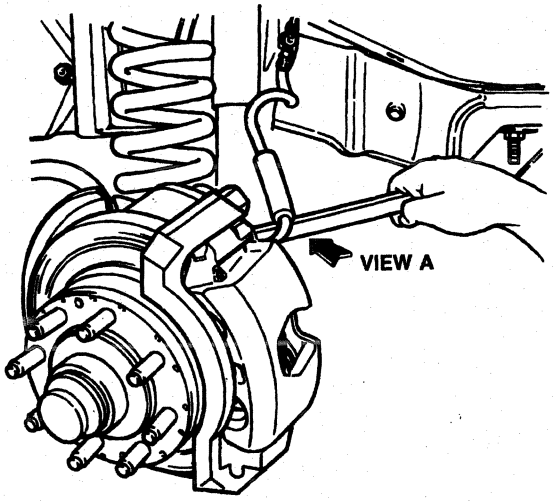

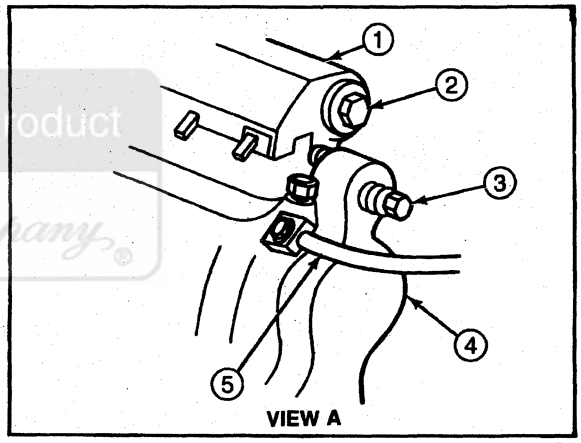

H8192-B

Item	Part Number	Description
1	2B292	Anchor Bracket
2	N807794-S60	Anchor Bolt, M16 x 2.0 x 50 (2 Req'd)
3	—	Caliper Pin (Part of 2B120)
4	2B120	Disc Brake Caliper
5	2078	Front Brake Hose

5. **CAUTION: Do not let the disc brake caliper (2B120) hang by the front brake hose (2078). The front brake hose could become stretched or twisted, which can cause the front brake hose to leak and rupture, resulting in failure.**

   Remove the disc brake caliper.

Official Licensed Product Ford Motor Company

REMOVAL AND INSTALLATION (Continued)

6. If the disc brake caliper is to be removed for service or replacement, disconnect the front brake hose from the disc brake caliper. Plug the end of the front brake hose to prevent fluid loss and the entry of air into the system. If the disc brake caliper is not to be removed, wire it up to the frame (5005) of the vehicle to avoid damage to the front brake hose.
7. Inspect disc brake caliper. Refer to Cleaning and Inspection in this section.

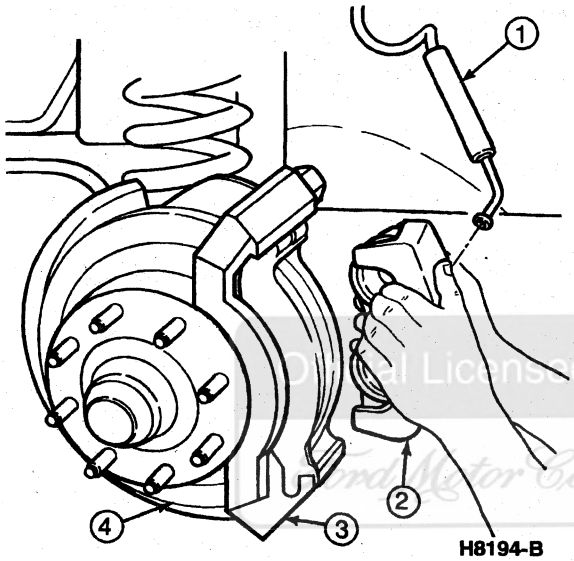

H8194-B

Item	Part Number	Description
1	2078	Front Brake Hose
2	2B120	Disc Brake Caliper
3	2B292	Anchor Bracket
4	1102	Front Disc Brake Hub and Rotor

Installation

1. Install caliper slide pins through disc brake caliper and front wheel spindle (3105). Tighten bolts to 22-40 N·m (16-30 lb-ft).
2. If front brake hose was removed, replace both washers (each side of inlet block). Connect the front brake hose. Tighten inlet block bolt to 30-40 N·m (22-30 lb-ft). Bleed the system as described in Section 06-06.

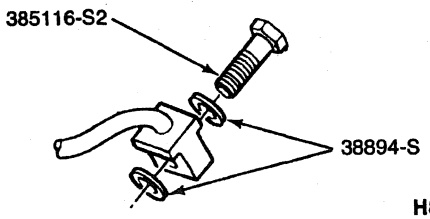

H8295-B

3. Install wheel and tire assembly. Remove the safety stands and lower the vehicle.
4. If the brakes were not bled and disc brake caliper was not removed, check the fluid level in the brake master cylinder reservoir and fill if required.
5. Pump the brakes several times to make sure of a firm brake pedal (2455).
6. Operate the vehicle to check brake operation.

Brake Shoe and Lining, Dual Piston

CAUTION: Always replace all brake shoes and linings (2001) on an axle. Never service only one wheel (1007).

Replace brake shoes and linings when the lining is worn to a minimum thickness of 0.8 mm (1/32 inch) above the brake pad backing plate.

Removal

1. Remove disc brake caliper (2B120).
2. Remove the outer and inner brake shoes and linings.
3. Inspect disc brake caliper. Refer to Cleaning and Inspection in this section.

Installation

1. Install new inner and outer brake shoes and linings.
2. Install disc brake caliper.

Front Disc Brake Hub and Rotor

Removal

1. NOTE: When raising the vehicle, make sure the hoist lift points do not rest on the caliper pins.

   Raise the front of the vehicle and install safety stands.
2. Remove the wheel (1007) and tire assembly.
3. Remove both anchor bracket bolts. Examine both bolts for damage.
4. Remove the disc brake caliper and anchor bracket assembly from the front disc brake hub and rotor (1102) and suspend it out of the way with wire.
5. Remove the hub grease cap (1131), cotter pin, and nut retainer.

Digital Licensed Product Ford Motor Company

REMOVAL AND INSTALLATION (Continued)

6. **CAUTION: With the spindle nut removed, the front disc brake hub and rotor can slide off the front wheel spindle (3105).**

   NOTE: On F-Super Duty, the front disc brake rotor (1125) can be separated from the wheel hub (1104). Refer to the illustration in this section.

   Remove the spindle nut, front wheel outer bearing retainer washer (1195), the outer front wheel bearing (1216) and the front disc brake hub and rotor.
7. Check the condition of the front disc brake hub and rotor. Refer to Section 06-00.
8. Remove the wheel hub grease seal and the inner bearing cone and roller (1201). Discard the seal.

Installation

1. If installing a new front disc brake hub and rotor, remove the protective coating or any dirt or grease deposits with degreaser. On F-Super Duty vehicles, the machine screw threads must be coated with a suitable adhesive before attaching the front disc brake rotor to the wheel hub. Tighten screws to 100-120 N·m (74-89 lb-ft).
2. Thoroughly clean the bearing cone and rollers. Inspect for damage or wear. Refer to Section 04-00 for front wheel bearing adjustment. Replace if necessary.
3. Pack the front wheel bearing and bearing cone and roller with a lithium-base grease such as Premium Long-Life Grease XG-1-C or -K or equivalent meeting Ford specification ESA-M1C75-B.
4. Install the inner bearing cone and roller. Refer to Section 04-01A for 4x2 or Section 05-03C for 4x4 procedures.
5. Install the front disc brake hub and rotor on the front wheel spindle.
6. Install the outer front wheel bearing, front wheel outer bearing retainer washer and spindle nut.
7. Adjust bearing end play. Refer to Section 04-01A.
8. Install the disc brake caliper and anchor bracket assembly by installing two anchor bracket bolts. Tighten both bolts to 119-259 N·m (141-190 lb-ft).
9. Install the wheel and tire assembly. Tighten the lug nuts (1012) to the proper torque. Refer to Specifications at the end of this section.
10. Lower the vehicle. Check brakes for proper operation.

Rotor Shield

Removal

1. Remove front disc brake hub and rotor (1102). Refer to Front Disc Brake Hub and Rotor in the Removal and Installation portion of this section.
2. Remove three screws attaching front disc brake rotor shield (2K004) to front wheel spindle (3105).

Installation

1. Follow removal procedure in reverse order.
2. Tighten screws to 9-13 N·m (80-115 lb-in) for all except F-Super Duty. On F-Super Duty, tighten screws to 7-16 N·m (62-141 lb-in).

DISASSEMBLY AND ASSEMBLY

Caliper, Dual Piston

Disassembly

1. Disconnect the front brake hose (2078) and plug the end to prevent brake fluid leakage. Remove the disc brake caliper (2B120) as described in this section.
2. Remove the brake shoes and linings (2001) and disc brake pad anti-rattle clip.
3. Drain the fluid from the disc brake caliper.
4. Secure the disc brake caliper in a vise.
5. Place a block of wood between the caliper bridge and the caliper pistons (2196) and apply low-pressure air to the fluid port in the disc brake caliper with an air nozzle equipped with Rubber Tipped Air Gun D93L-7000-A or equivalent to remove the caliper pistons. The caliper pistons will be forced out to the wood block.

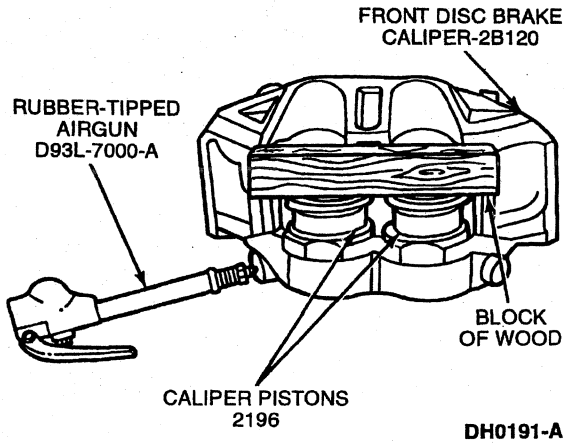

6. Remove the wood block and remove the caliper pistons.
7. Remove and discard the piston seals and boots.

DISASSEMBLY AND ASSEMBLY (Continued)

8. NOTE: Do not hone the caliper bores. Piston assemblies are not available for honed caliper bores.

   If the disc brake caliper is leaking, replace the piston assemblies. If the caliper bores are excessively scored or corroded, replace the disc brake caliper.

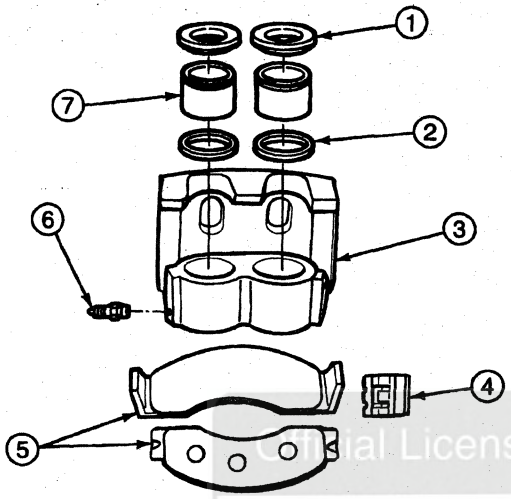

H6275-B

Item	Part Number	Description
1	—	Piston Boot (Part of 2B120)
2	—	Piston Seal (Part of 2B120)
3	2B120	Disc Brake Caliper
4	2B164	Disc Brake Pad Anti-Rattle Clip
5	2001	Brake Shoes and Linings
6	—	Bleeder Screw (Part of 2B120)
7	2196	Caliper Piston

Assembly

1. **CAUTION: Never reuse piston seals and dust boots. Install a new set each time the disc brake caliper is assembled.**

   Lubricate new piston seals with Ford High Performance DOT 3 Brake Fluid C6AZ-19542-AA or equivalent DOT 3 fluid meeting Ford specification ESA-M6C25-A and install into caliper bore seal grooves.
2. Apply a film of clean brake fluid to the caliper bores.
3. Lubricate the retaining lips of the dust boots with clean brake fluid and install into the boot retaining grooves in the caliper bores.
4. Apply a film of clean brake fluid to the caliper pistons.
5. Insert the caliper pistons into the dust boots and start them into the caliper bores by hand until they are beyond the piston seals. Be careful not to damage or dislodge the piston seal.
6. Place a wood block over one caliper piston and press the caliper piston into the cylinder being careful not to cock the caliper piston in the cylinder. Install the second caliper piston in the same manner. Seat boots correctly.
7. Install the brake shoes and linings and disc brake pad anti-rattle clip in the disc brake caliper. Place the disc brake caliper on the front wheel spindle (3105) and install the caliper pins.
8. Install the front brake hose with new copper washers and tighten to specification listed at the end of this section.
9. **CAUTION: Do not move the vehicle until a firm brake pedal (2455) is obtained.**

   Bleed the brake system. Refer to Section 06-06.

SERVICE PROCEDURES

Rotor Refinishing

Refer to the Adjustments portion of Section 06-00.

CLEANING AND INSPECTION

Caliper

NOTE: The disc brake caliper (2B120) should be inspected any time it is removed from the vehicle and during brake shoe and lining replacement.

1. NOTE: When raising the vehicle, make sure the hoist lift points do not rest on the caliper pins.

   Raise vehicle on hoist.
2. Remove the wheel and tire from the front disc brake hub and rotor (1102).
3. Visually check the disc brake caliper.
   a. If the disc brake caliper housing is leaking, it should be replaced.
   b. If a caliper piston (2196) is leaking, the disc brake caliper must be disassembled and new caliper piston installed.
   c. If a caliper piston is seized in the caliper bore, a new disc brake caliper housing is required.
4. **CAUTION: Do not pry on plastic caliper piston with a screwdriver or other tools; this will cause chipping.**

   If a disc brake caliper piston is removed for any reason, the piston seal must be replaced. Exercise care not to damage plastic caliper piston by protecting it from contact with any metal or sharp objects.

Ford Motor Company Confidential Licensed Printing

CLEANING AND INSPECTION (Continued)

5. Clean all metal parts with isopropyl alcohol. Then, clean out and dry the grooves and passageways with compressed air. Make sure that caliper bore and component parts are thoroughly clean and dry prior to assembly.
6. Check the caliper bore and caliper piston for excessive scoring or corrosion.
7. Inspect the caliper pin insulators and replace if damaged.

Brake Shoes and Linings

1. Inspect brake shoes and linings (2001) for wear. If the lining is worn to within 0.8 mm (1/32 inch) of the brake pad backing plate, replace all four brake shoes and linings (complete axle set) on front wheels as required.
2. Do not attempt to clean or restore any oil- or grease-soaked brake shoes and linings. When contaminated brake shoes and linings are found, they must be replaced in complete axle sets.

Rotor

Grease or any other foreign material must be kept off the brake shoe and lining surfaces of the rotor and external surfaces of the front disc brake hub and rotor (1102) during service operations. In handling the front disc brake hub and rotor and disc brake caliper (2B120), avoid deformation of the front disc brake hub and rotor and nicking or scratching of brake shoes and linings (2001).

Official Licensed Product
Ford Motor Company

ADJUSTMENTS

Hydraulic System Bleeding

Refer to Section 06-06.

SPECIFICATIONS

ROTOR DIMENSIONS

Vehicle	Minimum Rotor Thickness (Discard Thickness)		Rotor Thickness Maximum Variation		Brake Surface Lateral Runout (Maximum)		Rotor Surface Finish	
	mm	Inch	mm	Inch	mm	Inch	mm	Micro-Inches
F-250 Heavy Duty and F-350 4x2 SRW (Integral)	28.0	1.10	0.013	0.0005	0.08	0.003	0.4-2.0	15-80
F-350 4x2 DRW (2-Piece)	28.0	1.10	0.025	0.0010	0.25	0.010	0.4-2.0	15-80
F-250 Heavy Duty and F-350 4x4 SRW	28.5	1.12	0.025	0.0010	0.13	0.005	0.4-2.0	15-80
F-350 4x4 DRW	28.5	1.12	0.025	0.0010	0.13	0.005	0.4-2.0	15-80
F-Super Duty Chassis Cab and Motorhome Chassis DRW	36.3	1.43	0.025	0.0010	0.20	0.008	0.4-2.0	15-80

SPECIFICATIONS (Continued)

CAUTION: Never reuse brake fluid that has been drained from the hydraulic system or has been allowed to stand in an open container for an extended period of time.

LUBRICANT/ADHESIVE/CLEANER SPECIFICATIONS

Description	Part Number	Ford Specification
Premium Long-Life Grease	XG-1-C or -K	ESA-M1C75-B
High Performance DOT 3 Brake Fluid	C6AZ-19542-AA	ESA-M6C25-A and DOT 3

WHEEL TORQUE SPECIFICATIONS

Vehicle	Wheel	Bolt Size	Torque	
			N·m	Lb-Ft
F-250 Heavy Duty and F-350	8-Lug Wheel	9/16-18	190	140
F-Super Duty and F-Super Duty Motorhome Chassis Vehicles	10-Lug Wheel	9/16-18	190	140

NOTE: Torque specifications are for clean, dirt- and paint-free, dry bolt and nut threads. Never use oil or grease on studs or nuts.

TORQUE SPECIFICATIONS

Description	N·m	Lb-Ft	Lb-In
F-250 Heavy Duty and F-350 Disc Brake Rotor Shield Screws	9-13	—	80-115
F-Super Duty Disc Brake Rotor Shield Screws	7-16	—	62-141
F-Super Duty Front Disc Brake Rotor to Wheel Hub Torx® Screws	100-120	74-89	—

(Continued)

TORQUE SPECIFICATIONS (Cont'd)

Description	N·m	Lb-Ft	Lb-In
Anchor Bracket Bolts	191-259	141-190	—
Caliper Pins	22-40	16-30	—
Front Brake Hose Inlet Block Bolt	30-40	22-30	—

SPECIAL SERVICE TOOLS/EQUIPMENT

SPECIAL SERVICE TOOLS DESIRED

Tool Number	Description
D93L-7000-A	Rubber-Tipped Air Gun

SECTION 06-04 Brakes, Rear Disc

SUBJECT	PAGE
VEHICLE APPLICATION	06-04-1
DESCRIPTION AND OPERATION	
Anti-Rattle Clip	06-04-2
Brake Shoe and Lining	06-04-2
Brakes, Rear Disc	06-04-1
Caliper	06-04-1
Hubs and Bearings	06-04-2
Rotor	06-04-1
Support Bracket	06-04-2
DIAGNOSIS AND TESTING	
Brakes, Rear Disc	06-04-2
REMOVAL AND INSTALLATION	
Brake Shoe and Lining	06-04-3
Caliper	06-04-2
Rotor	06-04-4

SUBJECT	PAGE
REMOVAL AND INSTALLATION (Cont'd.)	
Service Precautions	06-04-2
Shield	06-04-6
Support Bracket	06-04-6
DISASSEMBLY AND ASSEMBLY	
Caliper	06-04-7
SERVICE PROCEDURES	
Rotor Refinishing	06-04-8
CLEANING AND INSPECTION	
Brake Shoe and Lining	06-04-8
Caliper	06-04-8
Rotor	06-04-8
SPECIFICATIONS	06-04-8
SPECIAL SERVICE TOOLS/EQUIPMENT	06-04-9

VEHICLE APPLICATION

F-Super Duty

Official Licensed Product
Ford Motor Company

DESCRIPTION AND OPERATION

Brakes, Rear Disc

The F-Super Duty vehicle is equipped with rear disc brakes as standard equipment. The rear disc brakes operate in the same manner as front disc brakes. Hydraulic pressure from the brake master cylinder (2140) acts on the caliper pistons (2196) to squeeze the rear brake shoes and linings (2001) against the rotors, which are bolted to the hub.

Rotor

The rotor used in the F-Super Duty rear disc brake system is a rib-vented, cast iron design. The rotor is 328 mm (12.9 in.) in diameter and is bolted to the rear hub. The compression action on the rotor by the disc brake caliper (2B120) and the brake shoe and lining (2001) provides braking power at the rear axle (4001).

Caliper

The disc brake caliper (2B120) is a pin rail slider type. The disc brake caliper has two hydraulic caliper pistons (2196), each with a diameter of 60 mm (2.36 in.). The rear disc brake caliper operates in the same manner as the front disc brake caliper with hydraulic pressure from the brake master cylinder (2140).

Because the F-Super Duty vehicle is equipped with a transmission-mounted parking brake system, the rear disc brake caliper does not have a built-in parking brake mechanism or adjuster.

DESCRIPTION AND OPERATION (Continued)

Brake Shoe and Lining

The brake shoes and linings (2001) are of a design and composition meant to withstand the extreme heat caused by the friction of braking action. The brake shoe and lining material is bonded to steel backing plates which are fitted into the disc brake caliper (2B120). The brake shoes and linings in the rear disc brake system are pressed against the inboard and outboard sides of the rotor by the rear disc brake caliper. This compression action on the rotor provides the braking power in the rear brake system.

Anti-Rattle Clip

An anti-rattle clip is fixed to each pad of the brake shoe and lining (2001) to prevent movement of the brake shoe and lining when not under braking pressure. Stopping the non-braking movement of the brake shoes and linings prevents a rattling noise and undue wear of the brake shoe and lining seat in the disc brake caliper (2B120).

Support Bracket

The support bracket is bolted to the rear axle housing flange and provides a mount for the disc brake caliper (2B120). The support bracket is machined to accept the caliper pin, which retains the disc brake caliper in the caliper support bracket and allows the disc brake caliper to move to compensate for brake shoe and lining wear.

Hubs and Bearings

For description and operation of the rear wheel hubs and wheel bearings, refer to Section 05-02D.

DIAGNOSIS AND TESTING

Brakes, Rear Disc

Refer to Section 06-00.

REMOVAL AND INSTALLATION

Service Precautions

Observe the following precautions when servicing the rear disc brake system:

- When removing a disc brake caliper (2B120), never allow the disc brake caliper to hang from the rear brake hose. Provide a suitable support.
- Replace brake shoes and linings (2001) when they reach a thickness of 0.8 mm (1/32 in.).
- Always replace all brake shoes and linings on an axle. Never service only one side.
- Do not allow grease, oil or other contaminants to contact the brake lining material.
- When removing brake parts, make sure to avoid damage to the bleeder screw and rear wheel disc brake shield (2C028).
- During installation, make sure that all parts are correctly aligned.

Caliper

Removal

1. Remove sufficient brake fluid from the brake master cylinder reservoir (2K478) to allow for pressing the caliper pistons (2196) into the bore. Discard the brake fluid.
2. Raise and support the vehicle.
3. Remove the wheel (1007).

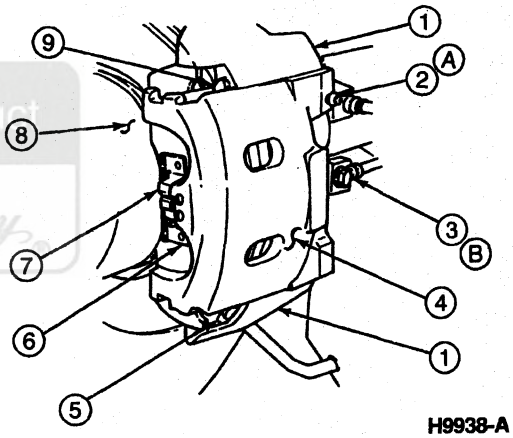

H9938-A

Item	Part Number	Description
1	2B292	Disc Brake Caliper Support Bracket
2	2208	Bleeder Screw
3	385116-S2	Rear Brake Hose-to-Caliper Flow Bolt
4	2B120	Disc Brake Caliper
5	2C150	Caliper Locking Pin, Lower
6	2001	Brake Shoe and Lining, Outboard
7	—	Anti-Rattle Clip (Part of 2001)
8	1109	Rear Hub and Rotor Assy
9	2C150	Caliper Locking Pin, Upper
A	—	Tighten to 7-9 N·m (62-79 Lb-In)
B	—	Tighten to 30-39 N·m (22-29 Lb-Ft)

Official Licensed Product Company

REMOVAL AND INSTALLATION (Continued)

4. Position an appropriate C-clamp on the disc brake caliper (2B120), with the clamp frame on the disc brake caliper and the clamp screw on the outboard brake shoe and lining backing plate.
5. Compress the C-clamp to drive the caliper pistons into the caliper bore only enough to give removal clearance. Remove the C-clamp.
6. Remove the rear brake hose-to-caliper flow bolt and discard the copper washers.
7. Plug the rear brake hose to prevent brake fluid loss and air entry.
8. Using Hydraulic Caliper Pin Remover D89T-2196-A or equivalent, drive out the upper and lower caliper locking pins.
9. Remove the disc brake caliper from the vehicle.

Installation

1. If necessary, install the brake shoe and lining (2001) and anti-rattle clip.
2. Position the disc brake caliper in the support bracket.
3. Lubricate the caliper locking pins with Silicone Brake Caliper Grease and Dielectric Compound D7AZ-19A331-A (Motorcraft WA-10) or equivalent meeting Ford specification ESE-M1C171-A.
4. Drive the caliper locking pins into the caliper / support bracket assembly until the tabs at each end of the pins snap into place.
5. Using new copper washers, attach the rear brake hose to the disc brake caliper. Tighten the rear brake hose-to-caliper flow bolt to 30-39 N·m (22-29 lb-ft).
6. Replace the wheel and tire assembly. Tighten the lug nuts (1012) to 190 N·m (140 lb-ft).
7. Lower the vehicle.
8. NOTE: Check the brake fluid level in the brake master cylinder reservoir and maintain sufficient level to prevent air entry into the system.

   Pump the brake pedal (2455) several times to drive the caliper pistons into contact with the brake shoe and lining.
9. Fill the brake master cylinder reservoir with Ford High Performance DOT 3 Brake Fluid C6AZ-19542-AA or equivalent DOT 3 fluid meeting Ford specification ESA-M6C25-A.
10. Bleed the brake system and test the brakes for proper operation. Refer to Section 06-06.

Brake Shoe and Lining

Removal

1. Remove sufficient brake fluid from the brake master cylinder reservoir (2K478) to allow for compressing the caliper pistons (2196) into the disc brake caliper bore.
2. Raise and support the vehicle.
3. Remove the tire and wheel assembly.
4. Position an appropriate C-clamp on the disc brake caliper (2B120), with the clamp frame on the caliper and the clamp screw on the outboard brake shoe and lining backing plate.
5. Compress the C-clamp to drive the caliper pistons into the caliper bore only enough to provide removal clearance. Remove the C-clamp.
6. Using Hydraulic Caliper Pin Remover D89T-2196-A or equivalent, drive out the upper and lower caliper locking pins.
7. **CAUTION: Do not allow the disc brake caliper to hang from the rear brake hose.**

   Tilt out and remove the disc brake caliper from the support bracket. Support the disc brake caliper with a wire or equivalent.
8. Remove the brake shoes and linings (2001) from the disc brake caliper support bracket.

Installation

1. **WARNING: CONTAMINATED BRAKE SHOES AND LININGS CAN SEVERELY AFFECT BRAKING EFFICIENCY. DO NOT INSTALL BRAKE SHOES AND LININGS CONTAMINATED BY GREASE, OIL OR BRAKE FLUID. DO NOT ATTEMPT TO CLEAN CONTAMINATED BRAKE SHOES AND LININGS.**

   Position the brake shoes and linings and anti-rattle clips in the disc brake caliper support bracket.
2. Position the disc brake caliper into the disc brake caliper support bracket.
3. Lubricate the caliper locking pins with Ford Silicone Dielectric Compound D7AZ-19A331-A (Motorcraft WA-10) or equivalent meeting Ford specification ESE-M1C171-A.
4. Drive the caliper locking pins into the caliper / support bracket assembly.
5. Replace the tire and wheel assembly. Tighten the lug nuts (1012) to 190 N·m (140 lb-ft).
6. Lower the vehicle.
7. NOTE: Check and maintain the brake fluid at sufficient level to prevent air from entering the system.

   Operate the brake pedal (2455) several times to bring the caliper pistons into contact with the brake shoe and lining.
8. Fill the brake master cylinder reservoir with Ford High Performance DOT 3 Brake Fluid C6AZ-19542-AA or equivalent DOT 3 fluid meeting Ford specification ESA-M6C25-A.
9. Test the brake system for proper operation.

REMOVAL AND INSTALLATION (Continued)

Rotor

SPECIAL SERVICE TOOL(S) REQUIRED

Description	Tool Number
Hub Locknut Wrench	T88T-4252-A

Removal

1. Remove the disc brake caliper (2B120). Refer to Caliper in the Removal and Installation portion of this section.
2. Remove the axle shaft (4234). Refer to the Disassembly and Assembly portion of Section 05-02C in the Powertrain, Drivetrain Manual.

Rear Disc Brake Assembly

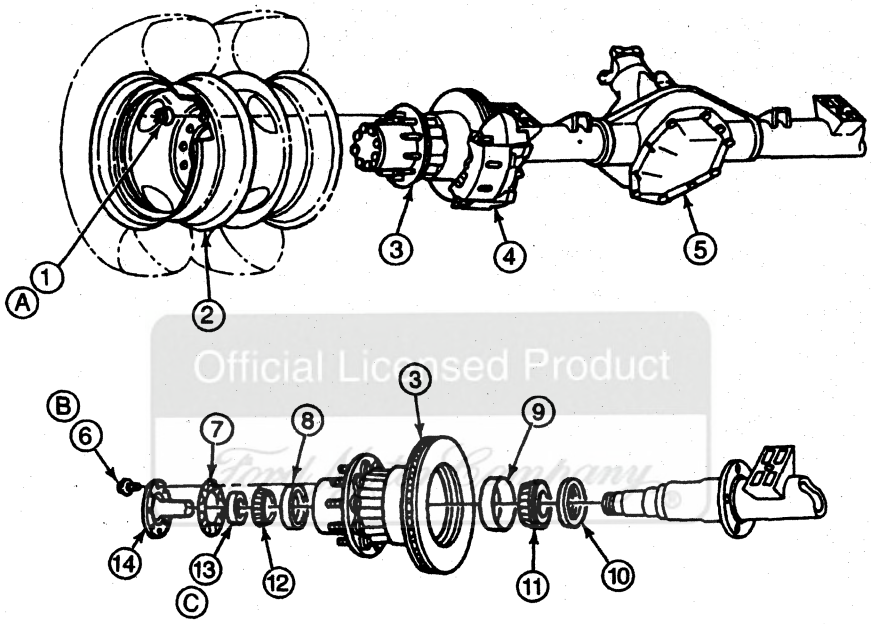

Official Licensed Product

F5648-E

Item	Part Number	Description
1	1012	Lug Nut
2	1007	Wheel
3	1109	Rear Hub and Rotor Assy
4	2B120	Disc Brake Caliper
5	4001	Dana Full-Floating Axle — Model 80
6	4A140	Axle Shaft-to-Rear Hub Bolt
7	1001	Rear Wheel Gasket
8	1239	Outer Bearing Cup
9	1243	Inner Bearing Cup
10	1175	Inner Hub Seal
11	1244	Rear Wheel Bearing Inner Cone and Roller

(Continued)

Item	Part Number	Description
12	1240	Rear Wheel Bearing Outer Cone and Roller
13	1A124	Hub Nut
14	4234	Axle Shaft
A	—	Tighten to 190 N·m (140 Lb-Ft)
B	—	Tighten to 113-153 N·m (84-112 Lb-Ft)
C	—	Tighten to 88-102 N·m (65-75 Lb-Ft). Back Off 90 Degrees and Retighten to 20-27 N·m (15-20 Lb-Ft) While Rotating Rear Hub and Rotor Assy.

REMOVAL AND INSTALLATION (Continued)

3. NOTE: Press in on the tool to disengage the nut ratchet.

   Remove the wheel bearing hub nut using Hub Locknut Wrench T88T-4252-A, so that the drive tangs engage the four slots of the hub nut.

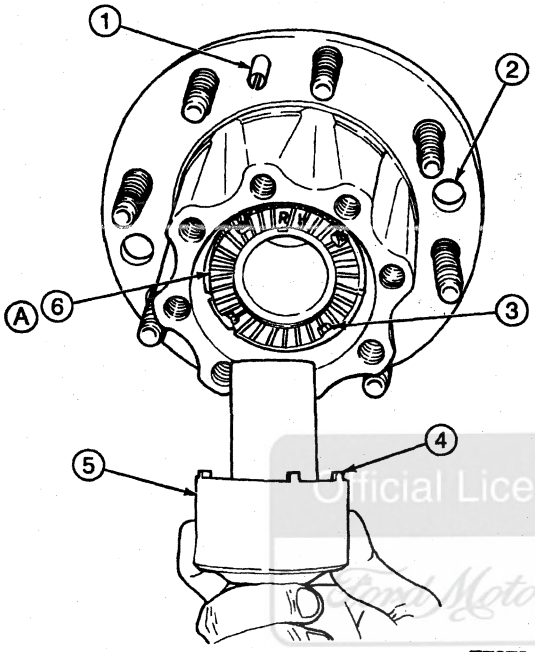

E7670-D

Item	Part Number	Description
1	—	Valve Stem Alignment Pin (Dual Rear Wheel Only) (Part of 1109)
2	—	Wheel Pin Locating Hole (Part of 1109)
3	—	Slot (Part of 1A124)
4	—	Drive Tang (Part of T88T-4252-A)
5	T88T-4252-A	Hub Locknut Wrench
6	1A124	Hub Nut
A	—	Tighten to 88-102 N·m (65-75 Lb-Ft) while rotating hub. After tightening, ratchet back 90 degrees, then tighten to 20-27 N·m (15-20 Lb-Ft). The maximum torque to rotate the hub is 2-3 N·m (18-27 Lb-In). Wheel end play is 0.

4. Remove the outer rear wheel bearing cone and roller.
5. Protect the rear axle spindle threads with cardboard tubing, tape or equivalent.
6. Remove the rear hub and rotor assembly using care not to damage the rear axle spindle threads.
7. With the rotor facing upward, secure the rear hub and rotor assembly in a vise with protective jaw caps.
8. Remove the ten rotor-to-rear hub bolts and remove the rotor from the rear hub (1109).

Installation

1. Position the rotor on the rear hub.
2. Install the ten rotor-to-rear hub bolts. Tighten to 113-153 N·m (84-112 lb-ft).
3. Protect the rear axle spindle threads with cardboard tubing or tape.
4. Carefully position the rear hub and rotor assembly on the rear axle spindle. Remove the thread protection.
5. Install the outer wheel bearing cone and roller and start the bearing hub nut making sure the hub nut tab is properly located in the keyway prior to thread engagement.

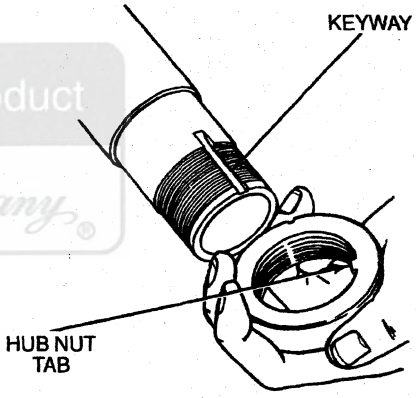

E9811-A

6. NOTE: This procedure is intended to prevent side-to-side end play of the hub and rotor assembly. To verify that there is no side-to-side end play, use a dial indicator magnetically mounted to the spindle end with the indicator on the outboard surface of the hub.

   Position the Hub Locknut Wrench T88T-4252-A so that the drive tangs of the tool engage the four slots of the nut. Apply inward pressure to the socket to separate the ratcheting components of the nut, tighten to 88-102 N·m (65-75 lb-ft). Back off 90 degrees, then retighten to 20-27 N·m (15-20 lb-ft). Rotate hub occasionally while tightening to seat the bearings.
7. Prior to installation of the axle shaft, clean and remove any debris in the hub bolt holes.
8. Inspect axle shaft for:
   - cracked material around the holes.
   - oversized holes.

   Replace axle shaft if any of these conditions exist.

Official Licensed Product Ford Motor Company

REMOVAL AND INSTALLATION (Continued)

9. Install the axle shaft and rear wheel gasket (1001).
10. **CAUTION: Do not tighten the axle shaft-to-rear hub bolts until the lug nuts (1012) are tightened to specification.**

    Using new axle shaft-to-rear hub bolts, coat the bolt threads with a suitable thread adhesive and install the bolts only until they seat.
11. Install the disc brake caliper. Refer to Caliper in the Removal and Installation portion of this section.
12. Install the wheels (1007).
13. Remove safety stands and lower the vehicle to the floor.
14. Tighten the lug nuts to 190 N·m (140 lb-ft).
15. Tighten the axle shaft-to-rear hub bolts to 113-153 N·m (84-112 lb-ft).

Support Bracket

Removal

1. Remove the rotor. Refer to Rotor in the Removal and Installation portion of this section.
2. Remove the three disc brake caliper support bracket-to-rear axle flange bolts and nuts.

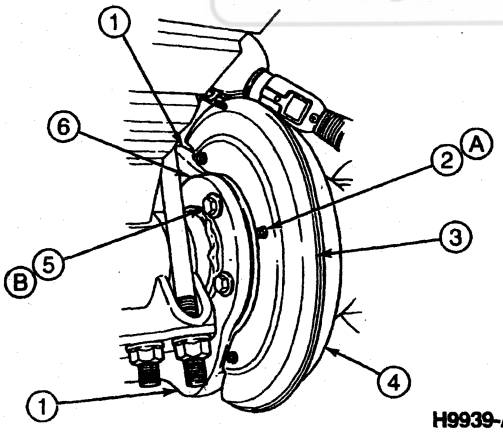

H9939-A

Item	Part Number	Description
1	2B292	Disc Brake Caliper Support Bracket
2	42499	Rotor Shield Bolt (3 Req'd)
3	2C028	Rear Wheel Disc Brake Shield
4	1102	Rotor
5	N605831-S2	Bolt, Disc Brake Caliper Support Bracket-to-Rear Axle Flange (3 Req'd)

(Continued)

Item	Part Number	Description
6	—	Rear Axle Flange (Part of 4001)
A	—	Tighten to 7-9 N·m (62-79 Lb-In)
B	—	Tighten to 100-135 N·m (74-100 Lb-Ft)

3. Remove the disc brake caliper support bracket from the vehicle.

Installation

1. Follow removal procedure in reverse order.
2. Tighten the disc brake caliper support bracket-to-rear axle flange nuts to 100-135 N·m (74-100 lb-ft).

Shield

Removal

1. Remove the three rotor shield bolts
2. Remove the rear wheel disc brake shield (2C028).

Installation

1. Follow removal procedure in reverse order.
2. Tighten the rotor shield bolts to 7-9 N·m (62-79 lb-in).

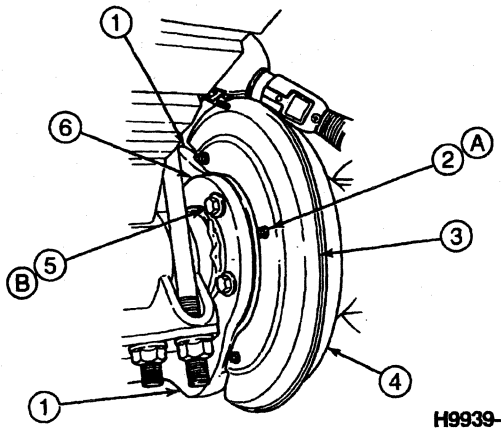

H9939-A

Item	Part Number	Description
1	2B292	Disc Brake Caliper Support Bracket
2	42499	Bolt, Rear Wheel Disc Brake Shield (3 Req'd)
3	2C028	Rear Wheel Disc Brake Shield
4	1102	Rotor

(Continued)

Licensed Product Ford Motor Company

REMOVAL AND INSTALLATION (Continued)

Item	Part Number	Description
5	N605831-S2	Bolt, Disc Brake Caliper Support Bracket-to-Rear Axle Flange (3 Req'd)
6	—	Rear Axle Flange (Part of 4001)
A	—	Tighten to 7-9 N·m (62-79 Lb-In)
B	—	Tighten to 100-135 N·m (74-100 Lb-Ft)

DISASSEMBLY AND ASSEMBLY

Caliper

Disassembly

1. Remove the disc brake caliper (2B120) from the vehicle. Refer to Caliper in the Removal and Installation portion of this section.

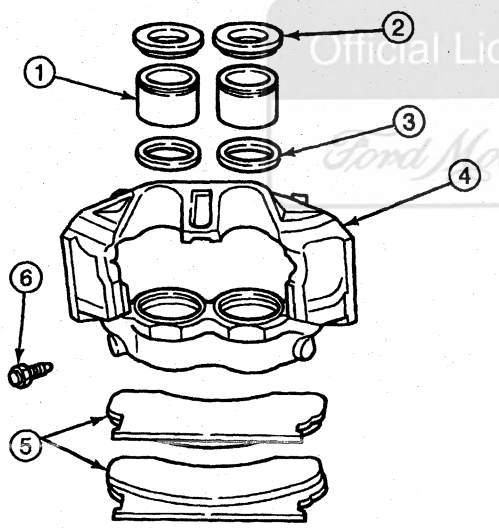

H5824-C

Item	Part Number	Description
1	2196	Caliper Piston
2	—	Piston Boot (Part of 2B120)
3	—	Piston Seal (Part of 2B120)
4	2B120	Disc Brake Caliper
5	2001	Brake Shoes and Linings
6	—	Bleeder Screw (Part of 2B120)

2. Open the bleeder screw and drain any remaining brake fluid from the disc brake caliper. After draining the fluid, close the bleeder screw.
3. Position a block of wood between the disc brake caliper and the caliper pistons (2196).
4. **WARNING: DO NOT USE AN EXCESSIVE AMOUNT OF AIR PRESSURE TO REMOVE THE CALIPER PISTONS. EXCESSIVE PRESSURE CAN FORCE THE CALIPER PISTONS OUT OF THE DISC BRAKE CALIPER BORE WITH ENOUGH FORCE TO CAUSE PERSONAL INJURY. NEVER ATTEMPT TO CATCH THE CALIPER PISTONS BY HAND AS THEY COME OUT OF THE DISC BRAKE CALIPER BORE.**

   NOTE: Apply only enough air pressure to ease the caliper pistons out of the disc brake caliper.

   Using Rubber-Tipped Air Gun D93L-7000-A or equivalent, apply air pressure to remove the caliper pistons.

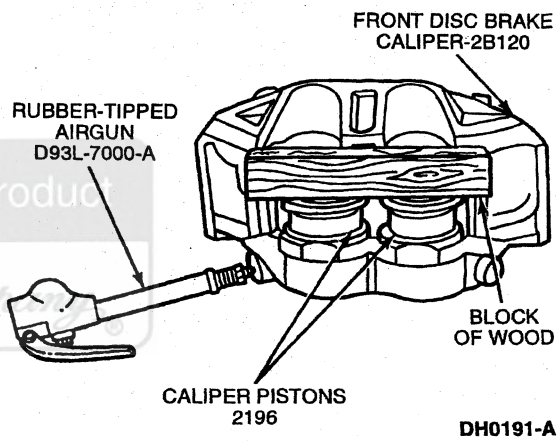

DH0191-A

5. Remove the caliper pistons.
6. Remove and discard the dust seal.
7. **CAUTION: Use a plastic or wooden pick to remove the piston seal. Do not use a metal tool. A metal tool can scratch or nick the piston seal groove and result in a possible piston seal leak.**

   Use a pick to remove the piston seal from the piston bore. Discard the piston seal.

Assembly

SPECIAL SERVICE TOOL(S) REQUIRED

Description	Tool Number
Piston Dust Seal Replacer	T92P-2588-AH
Driver Handle	T80T-4000-W

1. Inspect the disc brake caliper and caliper pistons for cracks or other damage. Replace as necessary.

Official Licensed Product Ford Motor Company

DISASSEMBLY AND ASSEMBLY (Continued)

2. **CAUTION: Do not hone disc brake caliper bores. Replacement caliper pistons and seals are not available for honed caliper bores.**

   Lubricate the caliper bore and a new piston seal with Ford High Performance DOT 3 Brake Fluid C6AZ-19542-AA or equivalent DOT 3 fluid meeting Ford specification ESA-M6C25-A.
3. Install the new piston seal in the caliper bore.
4. Install a new dust boot on one caliper piston.
5. **CAUTION: Use care not to scratch or damage the caliper piston when installing it into the caliper bore.**

   Using care not to dislodge or distort the piston seal, install the caliper piston into the caliper bore.
6. Use Piston Dust Seal Replacer T92P-2588-AH and Driver Handle T80T-4000-W to seat the new dust boot into the disc brake caliper.
7. Repeat Steps 2, 3, 4, 5 and 6 for the other caliper piston.
8. Install the disc brake caliper in the vehicle. Refer to Caliper in the Removal and Installation portion of this section.
9. Bleed the brake system. Refer to Section 06-06.
10. Test the brakes for proper operation.

SERVICE PROCEDURES

Rotor Refinishing

Refer to the Adjustments portion of Section 06-00.

CLEANING AND INSPECTION

Caliper

Remove any accumulated debris, oil, grease or dirt from the disc brake caliper (2B120). Clean all metal parts with isopropyl alcohol. Then, clean out and dry the grooves and passageways with compressed air. Make sure that caliper bore and component parts are thoroughly clean and dry prior to assembly. Avoid contamination of the brake shoes and linings (2001).

CAUTION: Do not hone the caliper bore. Replacement caliper pistons (2196) and seals are not available for caliper bores that have been honed.

Before assembly of the disc brake caliper, make the following inspections:

- Inspect the caliper pistons for cracks, wear or other damage. Replace as necessary.
- Inspect the caliper bore for scoring, corrosion or other damage. Replace as necessary.
- Inspect the disc brake caliper for cracks or other damage. Replace as necessary.

Rotor

Clean the rotor of any dirt, oil, grease or other contaminants. The rotor braking surface can be lightly sanded to remove minor scratches or surface rust.

Inspect the rotor for cracks, heat damage and minimum thickness. Check the rotor parallelism and lateral runout. Discard and replace any rotor that cannot meet specifications.

Brake Shoe and Lining

WARNING: CONTAMINATED BRAKE SHOES AND LININGS (2001) CAN SEVERELY AFFECT BRAKING EFFICIENCY. DO NOT INSTALL BRAKE SHOES AND LININGS CONTAMINATED BY GREASE, OIL OR BRAKE FLUID. DO NOT ATTEMPT TO CLEAN CONTAMINATED BRAKE SHOES AND LININGS.

Clean brake shoes and linings of any dirt or other foreign matter. Inspect for grease, oil, brake fluid or other contamination. Do not install brake shoes and linings with contaminated lining material. Check for loose bonding and damage.

When brake shoes and linings are replaced on one side, they must be replaced in full axle sets only. Do not replace one wheel side only.

Replace brake shoes and linings if lining thickness is 0.8 mm (1/32 in.) or less.

Official Licensed Product
Ford Motor Company

SPECIFICATIONS

BRAKE DIMENSIONS

Kelsey-Hayes H.D. Two-Piston Caliper F-Super Duty	
Description	**Specification**
Maximum Axle Capacity Usage — Front	CC = 5000 Lb SC = 6000 Lb
Maximum Axle Capacity Usage — Rear	11000 Lb
Caliper Part Number (RH)	E8TA-AB
Caliper Part Number (LH)	E8TA-AB
Outer Diameter of Rotor Braking Surface	328 mm (12.90 In.)
Inner Diameter of Rotor Braking Surface	205 mm (8.07 In.) Outer Surface 202 mm (7.95 In.) Inner Surface
Swept Area per Front Brake	961568 mm (149.50 In.)
Lining Width — Inboard	58.0 mm (2.28 In.)
Lining Width — Outboard	58.0 mm (2.28 In.)
Lining Area per Brake — Inboard	10580 mm (16.4 In.)
Lining Area per Brake — Outboard	10580 mm (16.4 In.)

(Continued)

SPECIFICATIONS (Continued)

BRAKE DIMENSIONS (Cont'd)

Kelsey-Hayes H.D. Two-Piston Caliper F-Super Duty	
Description	**Specification**
Lining Thickness — Inboard	13.7 mm (0.541 In.) to Discard Thickness
Lining Thickness — Outboard	13.7 mm (0.541 In.) to Discard Thickness
Minimum Lining Thickness Before Discard	0.762 mm (0.030 In.)

(Continued)

BRAKE DIMENSIONS (Cont'd)

Kelsey-Hayes H.D. Two-Piston Caliper F-Super Duty	
Description	**Specification**
Rotor Width	38.05 mm (1.50 In.)
Rotor Type	Vented
Caliper Type	Pin Rail
No. of Piston(s) per Brake	Two
Caliper Piston Diameter	60.00 mm (2.36 In.)
Effective Radius	134.29 mm (5.29 In.)

ROTOR SERVICE DIMENSIONS

Minimum Rotor Thickness (Discard Thickness)		Rotor Thickness Maximum Variation		Brake Surface Lateral Runout (Maximum)		Rotor Surface Finish	
mm	**Inch**	**mm**	**Inch**	**mm**	**Inch**	**mm**	**Micro-Inches**
36.3	1.43	0.025	0.0010	0.20	0.008	0.38-2.0	15-80

LUBRICANT/ADHESIVE/CLEANER SPECIFICATIONS

Description	Part Number	Ford Specification
Ford High Performance DOT 3 Brake Fluid	C6AZ-19542-AA	ESA-M6C25-A and DOT 3
Silicone Brake Caliper Grease and Dielectric Compound	D7AZ-19A331-A (Motorcraft WA-10)	ESE-M1C171-A

TORQUE SPECIFICATIONS

Description	N·m	Lb-Ft	Lb-In
Hub Nut (to Seat Bearings)	88-102	65-75	—
Back Off the Lock Nut 90 Degrees, Retighten (Refer to Procedure)	20-27	15-20	—
Axle Shaft-to-Rear Hub Bolts	113-153	84-112	—
Rotor-to-Rear Hub Bolts	113-153	84-112	—
Disc Brake Caliper Support Bracket-to-Rear Axle Flange Nuts	100-135	74-100	—
Rotor Shield Bolts	7-9	—	62-79
Rear Brake Hose-to-Caliper Flow Bolt	30-39	22-29	—
Bleeder Screw	7-9	—	62-79
Lug Nut	190	140	—

NOTE: Torque specifications are for clean, dirt- and paint-free, dry bolt and nut threads. Never use oil or grease on studs or nuts.

SPECIAL SERVICE TOOLS/EQUIPMENT

SPECIAL SERVICE TOOLS REQUIRED

Tool Number/ Description	Illustration
T80T-4000-W Driver Handle	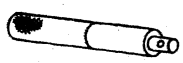 T80T-4000-W
T88T-4252-A Hub Locknut Wrench	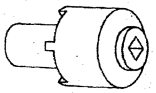 T88T-4252-A
T92P-2588-AH Piston Dust Seal Replacer	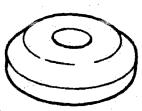 T92P-2588-AH

SPECIAL SERVICE TOOLS DESIRED

Tool Number	Description
D93L-7000-A	Rubber-Tipped Air Gun
D89T-2196-A	Hydraulic Caliper Pin Remover

Official Licensed Product

SECTION 06-05 Brake System, Parking

SUBJECT	PAGE
VEHICLE APPLICATION	06-05-1
DESCRIPTION AND OPERATION	
Brake Warning System	06-05-7
Control Assemblies	06-05-1
Parking Brake, Cable-Actuated Rear Wheel	06-05-1
Parking Brake, Cable-Actuated, Transmission-Mounted	06-05-4
DIAGNOSIS AND TESTING	
Parking Brake	06-05-7
Inspection and Verification	06-05-7
Pinpoint Tests	06-05-8
Symptom Chart	06-05-7
REMOVAL AND INSTALLATION	
Brake Shoe and Lining, Rear	06-05-15
Brake, Parking, Transmission-Mounted, F-Super Duty	06-05-15
Cable and Conduit, Front	06-05-11
Cable and Conduit, Intermediate	06-05-11
Cable and Conduit, Rear	06-05-14
Control, Parking Brake, F-250 Heavy Duty and F-350	06-05-9
Control, Parking Brake, F-Super Duty	06-05-9
Indicator Bulb, Brake System Warning	06-05-16
Signal Switch and Bracket, Parking Brake	06-05-16
CLEANING AND INSPECTION	
Brakes, Rear	06-05-17
Parking Brakes	06-05-16
Signal Switch and Bracket, Parking Brake	06-05-16
ADJUSTMENTS	
Cable Tension, Release	06-05-17
Parking Brake, Cable-Actuated Rear Wheel, F-250 Heavy Duty and F-350	06-05-17
Parking Brake, Cable-Actuated, Transmission-Mounted, F-Super Duty	06-05-17
Field Adjustment, Foot-Actuated Lever	06-05-17
SPECIFICATIONS	06-05-18
SPECIAL SERVICE TOOLS/EQUIPMENT	06-05-18

Official Licensed Product
Ford Motor Company

VEHICLE APPLICATION

F-250 Heavy Duty, F-350, F-Super Duty Chassis Cab and Motorhome Chassis Vehicles

DESCRIPTION AND OPERATION

Control Assemblies

Parking Brake, Cable-Actuated Rear Wheel

On F-250 Heavy Duty and F-350, each rear wheel brake assembly contains a cable-actuated parking brake assembly. A release handle is built into the parking brake control (2780).

DESCRIPTION AND OPERATION (Continued)

Brake Assembly, F-250 Heavy Duty and F-350

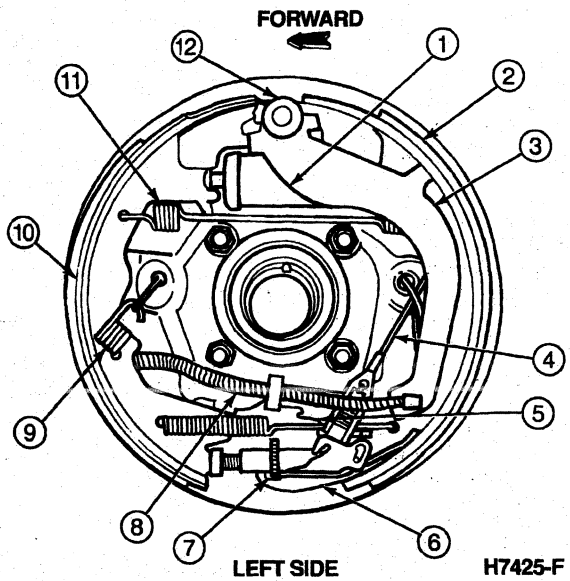

Item	Part Number	Description
1	2261	Rear Wheel Cylinder
2	2200	Rear Brake Shoe and Lining

(Continued)

Item	Part Number	Description
3	2A719	Brake Shoe Adjusting Lever Cable Guide (Shows Location Only)
4	2A178	Brake Shoe Adjusting Lever Cable
5	2049	Brake Shoe Adjusting Screw Spring
6	2A176	Brake Shoe Adjusting Lever
7	2041	Brake Adjuster Screw
8	2A635	Parking Brake Rear Cable and Conduit, Left
9	2068	Brake Shoe Hold-Down Spring
10	2200	Rear Brake Shoe and Lining
11	2035	Brake Shoe Retracting Spring
12	2A642	Primary Brake Shoe Parking Brake Lever Link

Official Licensed Product
Ford Motor Company

DESCRIPTION AND OPERATION (Continued)

Parking Brake System, F-250 Heavy Duty and F-350

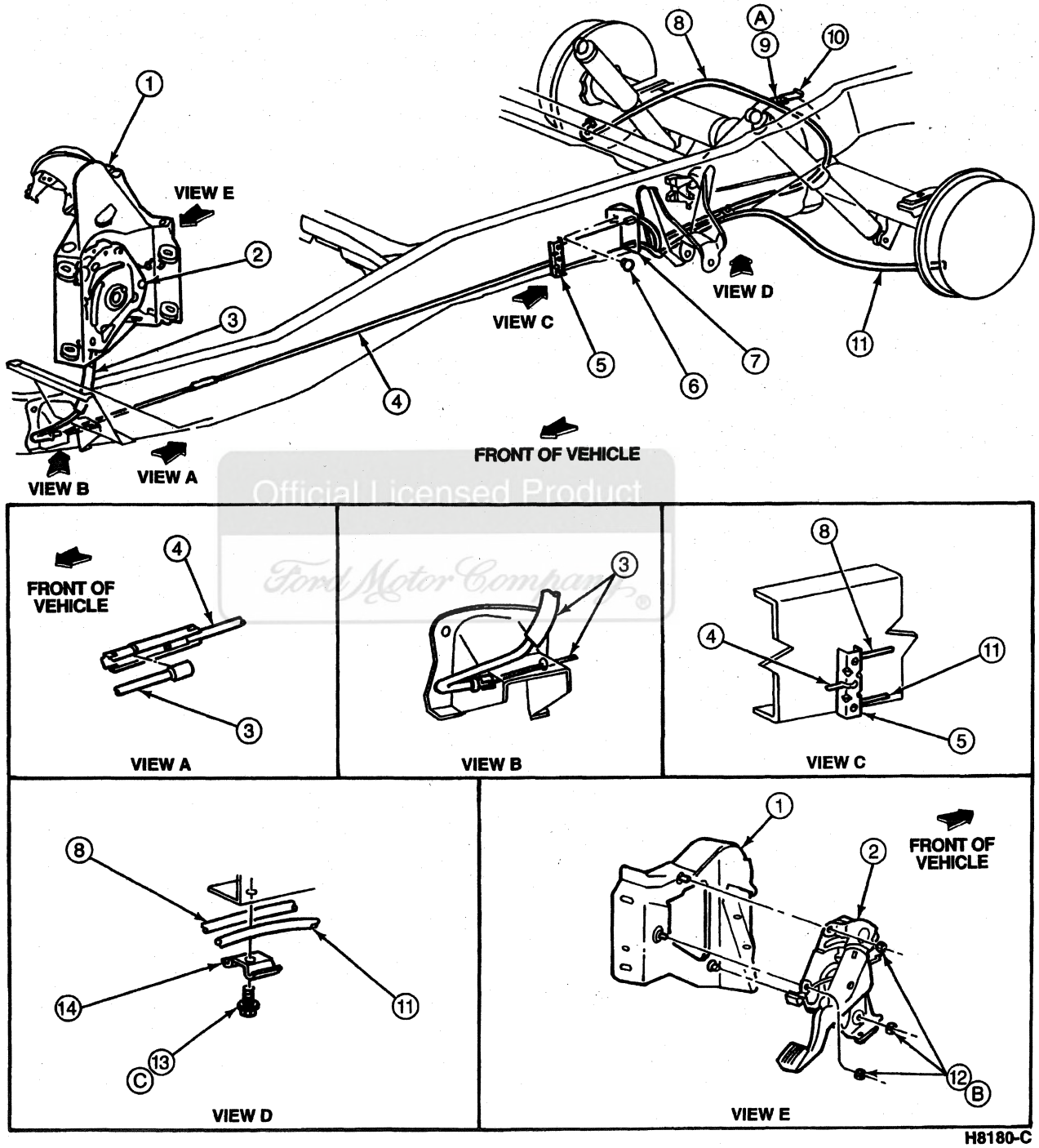

Official Licensed Product
Ford Motor Company

Item	Part Number	Description
1	3B139	Steering Column Support Bracket
2	2780	Parking Brake Control

(Continued)

Item	Part Number	Description
3	2853	Front Parking Brake Cable and Conduit
4	2A793	Cable, Intermediate

(Continued)

DESCRIPTION AND OPERATION (Continued)

Item	Part Number	Description
5	2A602	Parking Brake Cable Equalizer
6	N647097-S	Rivet
7	2530	Parking Brake Cable Bracket
8	2A635	Parking Brake Rear Cable and Conduit, Right
9	57632-S2	Screw and Washer, Cable Clip-to-Differential
10	N807947-S100	Clip
11	2A635	Parking Brake Rear Cable and Conduit, Left

(Continued)

Item	Part Number	Description
12	N620481-S2	Nut, Parking Brake Control-to-Steering Column Support
13	40949-S2	Screw, Cable Clip-to-Frame
14	N800962-S32	Clip, 10 x 10
A	—	Tighten to 17-23 N·m (13-17 Lb-Ft)
B	—	Tighten to 17-23 N·m (13-17 Lb-Ft)
C	—	Tighten to 24-30 N·m (18-22 Lb-Ft)

Parking Brake, Cable-Actuated, Transmission-Mounted

A transmission-mounted manually operated parking brake is used on F-Super Duty vehicles.

The parking brake is mounted to the transmission extension housing and incorporates a case assembly and a cable-actuated 9x3-inch Bendix brake assembly.

Parking Brake Assembly, F-Super Duty

Official Licensed Product
Ford Motor Company

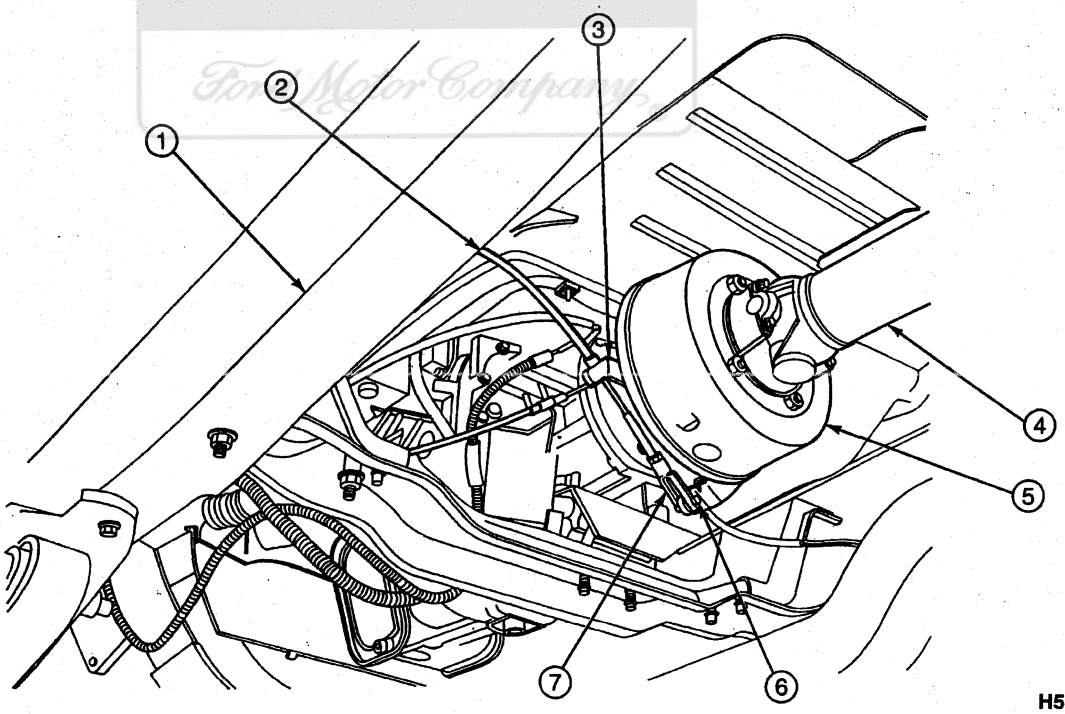

H5982-C

Item	Part Number	Description
1	5005	Frame
2	2853	Front Parking Brake Cable and Conduit

(Continued)

Item	Part Number	Description
3	—	Front Parking Brake Cable and Conduit Mounting Bracket (Part of 2598)
4	4602	Driveshaft

(Continued)

DESCRIPTION AND OPERATION (Continued)

Item	Part Number	Description
5	—	Parking Brake Drum (Part of 2598)

(Continued)

Item	Part Number	Description
6	76007-S8	Clevis Pin
7	—	Clevis (Part of 2853)

The case assembly consists of opposed-mounted roller bearings, companion flange and mainshaft assembly installed in a one-piece aluminum parking brake assembly case. On F-Super Duty Motorhome vehicles only, the electronic speedometer transducer is driven by the speedometer drive gear, splined to the mainshaft in the parking brake assembly. The case assembly has its own lubrication supply, separate from the transmission (7003). The parking brake is applied and released by a parking brake control.

Parking Brake Assembly, F-Super Duty Chassis Cab

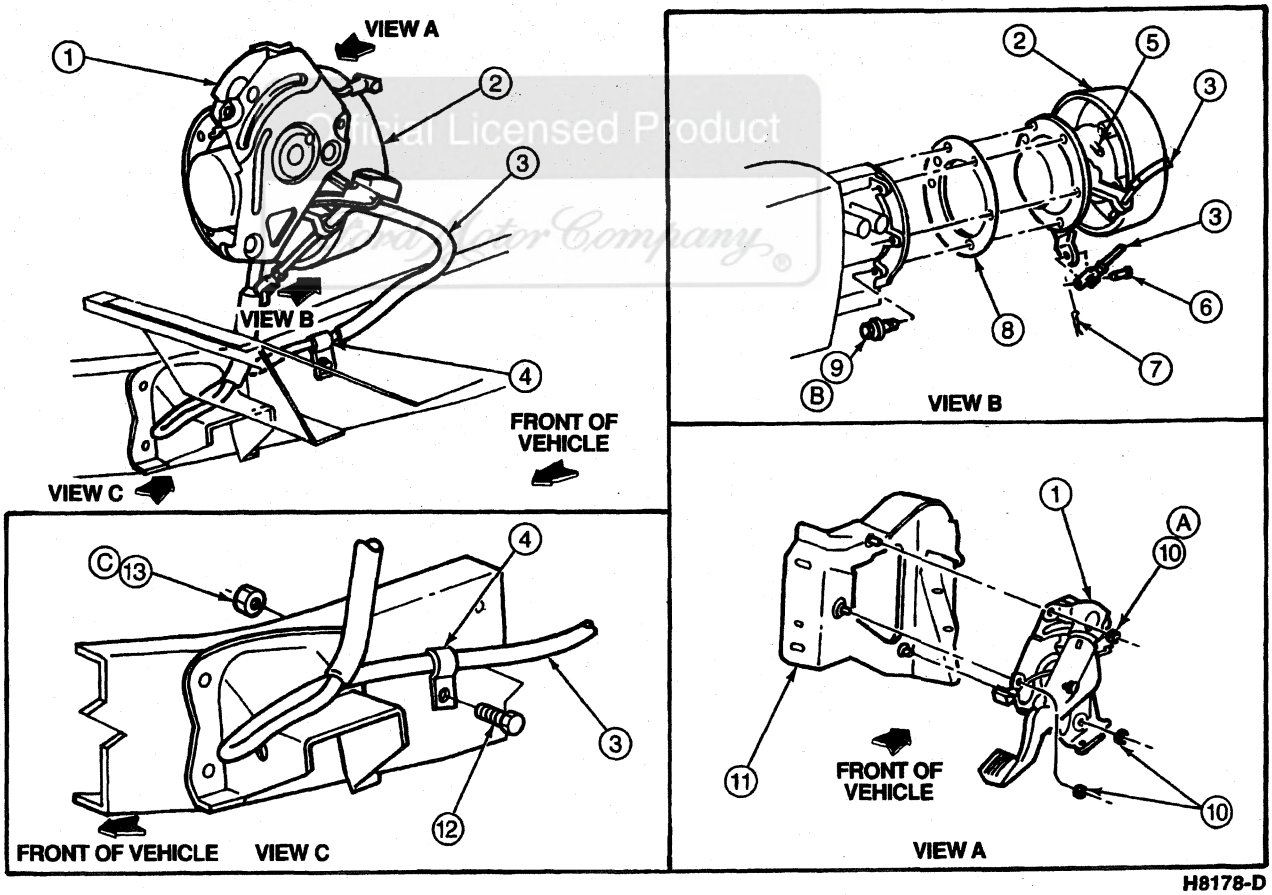

Item	Part Number	Description
1	2780	Parking Brake Control
2	2598	Parking Brake Assy, Transmission Mounted

(Continued)

Item	Part Number	Description
3	2853	Front Parking Brake Cable and Conduit
4	2595	Front Parking Brake Cable and Conduit Clamp

(Continued)

DESCRIPTION AND OPERATION (Continued)

Item	Part Number	Description
5	—	Fill Port (Part of 2598)
6	76007-S8	Clevis Pin
7	352358-S2	Self-Locking Pin
8	7086	Extension Housing Gasket
9	N605804-S100	Extension Housing-to-Parking Brake Assy Bolt
10	N620481-S2	Parking Brake Control-to-Steering Column Support Bracket Nut
11	3B139	Steering Column Support Bracket

(Continued)

Item	Part Number	Description
12	N606690-S36	Front Parking Brake Cable and Conduit Clamp Bolt
13	N6Z0481-S2	Front Parking Brake Cable and Conduit Clamp Nut
A	—	Tighten to 17-23 N·m (13-27 Lb-Ft)
B	—	Tighten to 34-57 N·m (25-42 Lb-Ft)
C	—	Tighten to 22-28 N·m (16-21 Lb-Ft)

Parking Brake Assembly, F-Super Duty Motorhome Chassis

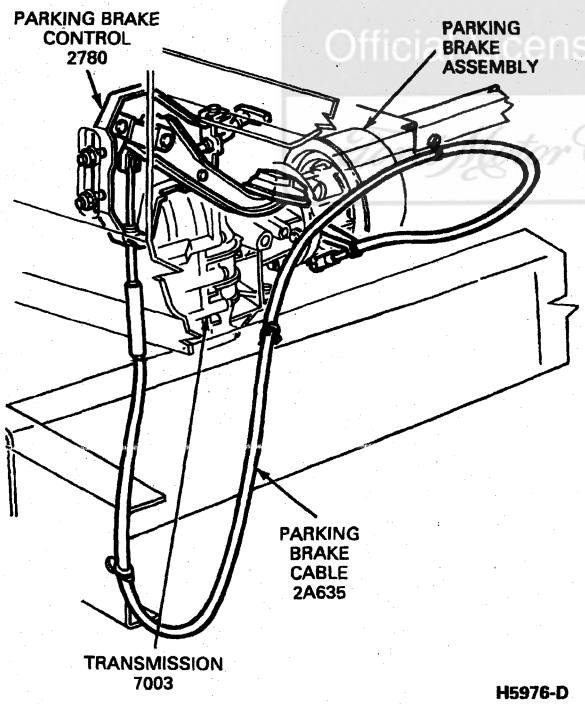

H5976-D

The front parking brake cable and conduit (2853) is attached to an intermediate cable connector, which is linked to the parking brake cable equalizer (2A602). Both the RH parking brake rear cable and conduit (2A635) and the LH parking brake rear cable and conduit are coupled to the parking brake cable equalizer and their respective rear brake assemblies.

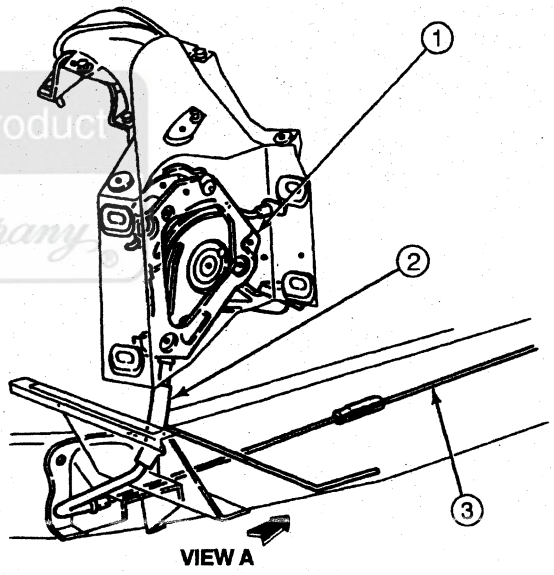

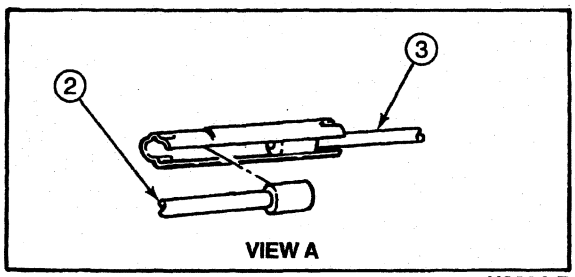

H9934-B

Item	Part Number	Description
1	2780	Parking Brake Control
2	2853	Front Parking Brake Cable and Conduit
3	2A293	Intermediate Cable

DESCRIPTION AND OPERATION (Continued)

Brake Warning System

If the parking brake control (2780) is not fully released, the parking brake signal switch and bracket will cause the brake warning light to illuminate. The parking brake signal switch and bracket is mounted on the parking brake control.

DIAGNOSIS AND TESTING

Parking Brake

Refer to Section 06-00 for diagnosis of F-250 Heavy Duty and F-350.

Inspection and Verification

Prior to servicing the parking brake, check the parking signal switch and bracket connector to verify that all connections are secure.

Symptom Chart

PARKING BRAKE SYSTEM

Condition	Possible Source	Action
• Squeals or Groans	• Glazed linings. • Misaligning of parts. • Dirt in brake drum.	• REMOVE glaze from linings using a file or emery cloth. • CORRECT misalignment by TIGHTENING any loose brake or drum mounting bolts. • REMOVE brake drum and CLEAN out lining dust and dirt.
• Scraping Noise	• Worn out parking brake shoe and lining. • Bent or misaligned parking brake shoe and lining.	• CHECK for lining worn down to rivets — REPLACE shoes if necessary. • CHECK for misaligned shoe, rubbing against brake drum. REPLACE parking brake shoes if necessary.
• Clicks	• Excessive clearance. • Eccentric or wobbling brake drum. • Excessive linkage friction.	• ADJUST cable clevis. • INSPECT drum runout. Also CHECK for worn or loose input or output bearings on mainshaft. CHECK drum mounting bolts for tightness. • CHECK linkage pivot points for rust, binding, or lack of lubrication.
• Grabbing	• Contaminated brake shoe and lining.	• REPLACE brake shoes and linings. CLEAN contamination from brake and brake drum. CORRECT the source of contamination.
• Parking Brake Will Not Apply	• Excessive clearance prevents complete brake application. • Contaminated linings. • Excessive linkage friction. • Worn out linings.	• ADJUST brake lining cable to take up slack in brake linkage. • SERVICE source of contamination. INSTALL new linings. • CHECK for linkage binding, and misalignment. LUBRICATE all pivot points. • REPLACE brake shoes and linings. CHECK backing plate for scoring and REPLACE if necessary. • GO to Pinpoint Test A.

Official Licensed Product
Ford Motor Company

DIAGNOSIS AND TESTING (Continued)

PARKING BRAKE SYSTEM (Continued)

Condition	Possible Source	Action
• Parking Brake Will Not Release	• Brake drag.	• ADJUST parking brake cables or service binding condition. INSPECT for broken or missing springs.
	• Rough brake drum surface.	• SMOOTH brake drum with emery paper, or REPLACE if brake drum is badly scored. **CAUTION: Brake drum to be replaced if inside diameter exceeds specification molded into the face.**
		• GO to Pinpoint Test B.

Pinpoint Tests

PINPOINT TEST A: PARKING BRAKE WILL NOT APPLY

Test Step		Result ▶	Action to Take
A1	CHECK PARKING BRAKE CONTROL		
	• Operate the parking brake control. • **Does parking brake control operate smoothly?**	Yes ▶ No ▶	GO to **A2**. SERVICE binding condition in parking brake control and RETEST system.
A2	CHECK PARKING BRAKE CABLES		
	• Raise and support vehicle. • Inspect for broken or binding parking brake cables. • **Is there a parking brake cable concern?**	Yes ▶ No ▶	SERVICE parking brake cables as required. RETEST system. GO to **A3**.
A3	CHECK PARKING BRAKE COMPONENTS		
	• Raise and support the vehicle. • On all except F-Super Duty, remove brake drums. • Operate the parking brake control and observe the parking brake components. • **Do the parking brake components operate?**	Yes ▶ No ▶	ADJUST the parking brake as described in this section. RETEST system. SERVICE worn or damaged parts. RETEST the system. For F-Super Duty, REMOVE the parking brake assembly and SERVICE as necessary.

PINPOINT TEST B: PARKING BRAKE WILL NOT RELEASE

Test Step		Result ▶	Action to Take
B1	CHECK PARKING BRAKE CABLE		
	• Release parking brake control. • On F-Super Duty, if the vehicle can't be moved, raise and support the vehicle. • Release parking brake cable tension. • On all but F-Super Duty, remove brake drum and disconnect parking brake rear cable and conduit. • **Does the parking brake release?**	Yes ▶ No ▶	GO to **B2**. For F-Super Duty, REMOVE the parking brake assembly and SERVICE as necessary. For all other vehicles, SERVICE the worn or damaged rear brake component. RETEST the system.
B2	PARKING BRAKE CONTROL CHECK		
	• Release the parking brake control. • **Does the parking brake control release?**	Yes ▶ No ▶	INSPECT parking brake cable for binding. SERVICE as necessary. RETEST system. SERVICE the worn or damaged parking brake control. RETEST the system.

Official Licensed Product Ford Motor Company

REMOVAL AND INSTALLATION

Control, Parking Brake, F-Super Duty

Removal

1. Disconnect the battery ground cable (14301).
2. Raise and support the vehicle.
3. Remove the clevis pin at the transmission-mounted parking brake.
4. Lower the vehicle and remove the LH cowl side trim panel (02344).
5. Disconnect the parking brake signal switch and bracket connector.
6. Remove the nuts holding the parking brake control (2780) to the steering column support bracket (3B139).
7. Disconnect the front cable barrel end from the parking brake control.
8. Disconnect the front parking brake cable and conduit (2853) from the control assembly housing by inserting a 1/2-inch 12-point box end wrench over the conduit, snap fitting to compress the retaining fingers. Back out the snap fitting.

Installation

1. Route the cable end fitting over the cable shoe. Snap the conduit fitting into the parking brake control. Insert the barrel end into the hole in the track.
2. Position the parking brake control to the steering column support bracket and install the three retaining nuts. Tighten to 17-23 N·m (13-17 lb-ft).
3. Raise and support the vehicle.
4. From under the vehicle, install the front parking brake cable and conduit to the transmission-mounted parking brake by inserting the clevis pin.
5. Lower the vehicle and connect the parking brake signal switch and bracket connector.
6. Install the cowl side trim panel.
7. NOTE: When the battery (10655) has been disconnected and reconnected, some abnormal drive symptoms may occur while the powertrain control module (PCM)(12A650) relearns its adaptive strategy. The vehicle may need to be driven 16 km (10 miles) or more to relearn the strategy.

   Connect the battery ground cable.
8. Check the tension on the system and adjust, if required, as described under Adjustments in this section.

Control, Parking Brake, F-250 Heavy Duty and F-350

Removal

1. Disconnect the battery ground cable (14301).
2. Remove the cowl side trim panel (02344).
3. Disconnect the parking brake signal switch and bracket connector at the parking brake control (2780).
4. Relieve tension on the parking brake system by having an assistant pull directly rearward on the intermediate cable until all front parking brake cable and conduit (2853) is unwound from the parking brake control. Be careful not to damage the coating on the parking brake cable.
5. Insert a 4-mm (0.156-inch) drill bit or equivalent size pin into the hole provided in the parking brake control.

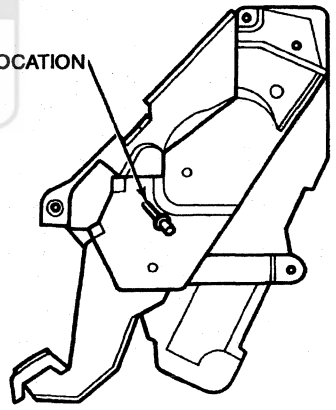

H10361-A

6. Remove the three nuts holding the parking brake control to the steering column support bracket (3B139). Pull the parking brake control away from the steering column support bracket.
7. Raise and support the vehicle.

REMOVAL AND INSTALLATION (Continued)

8. Disconnect the front parking brake cable and conduit from the cable connector.

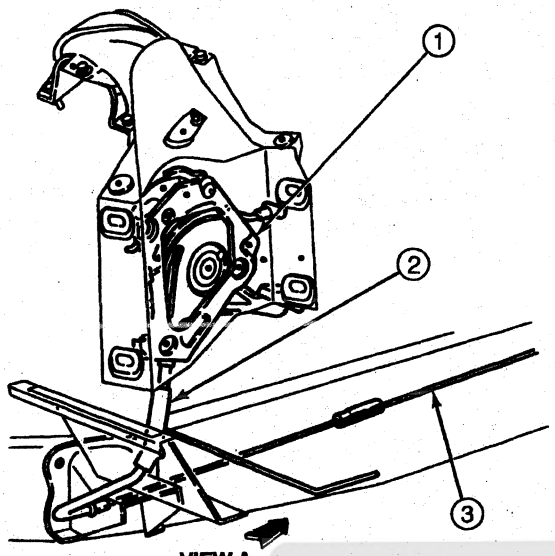

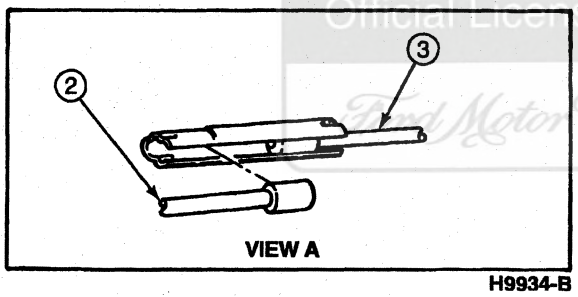

H9934-B

Item	Part Number	Description
1	2780	Parking Brake Control
2	2853	Front Parking Brake Cable and Conduit
3	2A793	Intermediate Cable

9. Remove the parking brake control and front cable from the vehicle.
10. Disconnect the barrel end of the front parking brake cable and conduit from the parking brake control.
11. Disconnect the cable conduit from the parking brake control by inserting a 1/2-inch 12-point box end wrench over the conduit snap fitting to compress the retaining fingers. Back out the snap fitting.

Installation

1. Route the cable end fitting over the cable shoe. Snap the conduit fitting into the parking brake control. Insert the barrel end into the hole in the track.
2. Position the parking brake control to the steering column support bracket and install the three retaining nuts. Tighten to 17-23 N·m (13-17 lb-ft).

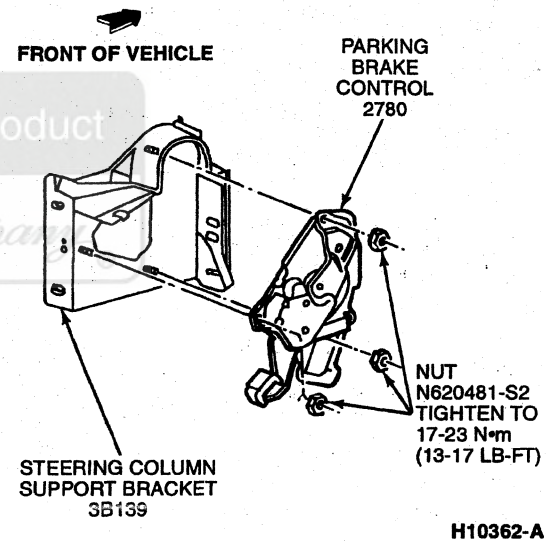

H10362-A

3. Raise and support the vehicle.

Official Licensed Product
Ford Motor Company

REMOVAL AND INSTALLATION (Continued)

4. Connect the front parking brake cable and conduit to the cable connector.

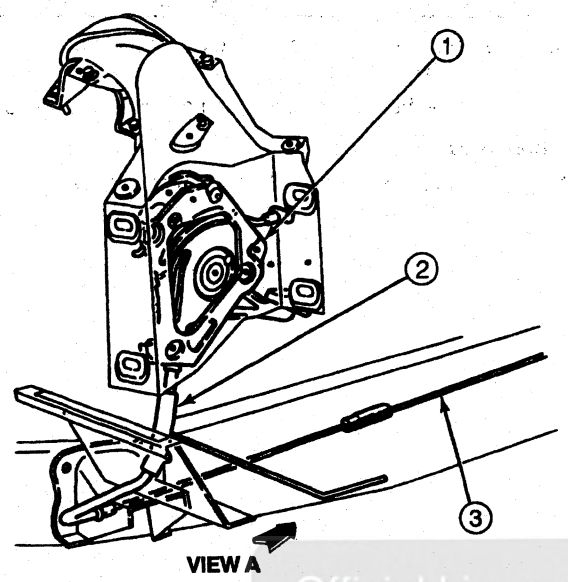

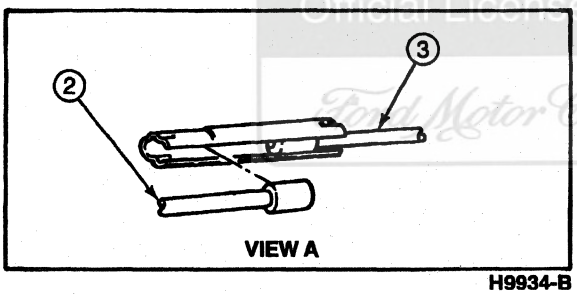

H9934-B

Item	Part Number	Description
1	2780	Parking Brake Control
2	2853	Front Parking Brake Cable and Conduit
3	2A793	Intermediate Cable

5. Lower the vehicle and connect the parking brake signal switch and bracket connector.
6. Carefully remove the drill bit from the parking brake control.
7. Operate the parking brake several times. Rotate both rear wheels (1007) to be sure that the parking brakes are not dragging.
8. Install the cowl side panel (02038).
9. NOTE: When the battery (10655) has been disconnected and reconnected, some abnormal drive symptoms may occur while the powertrain control module (PCM)(12A650) relearns its adaptive strategy. The vehicle may need to be driven 16 km (10 miles) or more to relearn the strategy.

   Connect the battery ground cable.

Cable and Conduit, Front

Removal

1. Remove the parking brake control (2780) and disconnect the front parking brake cable and conduit (2853) as described in this section.
2. Remove the front parking brake cable and conduit from the vehicle.

Installation

1. Position the front parking brake cable and conduit in the vehicle, routing it through the floorpan.
2. Install the parking brake control as described in this section.

Cable and Conduit, Intermediate

Removal

1. Remove the LH cowl side panel (02038).
2. To gain the needed slack, have an assistant pull the intermediate cable toward the rear of the vehicle.
3. While the assistant holds the intermediate cable, insert a 4-mm (0.156-in.) pin into the hole provided in the parking brake control (2780).

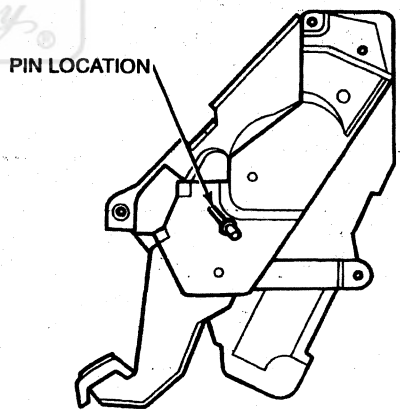

H10361-A

Official Licensed Product
Ford Motor Company

REMOVAL AND INSTALLATION (Continued)

4. Disconnect the intermediate cable from the cable connector.

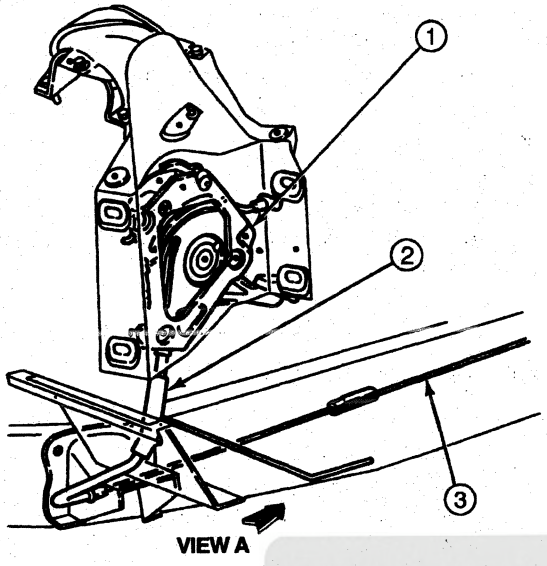

VIEW A

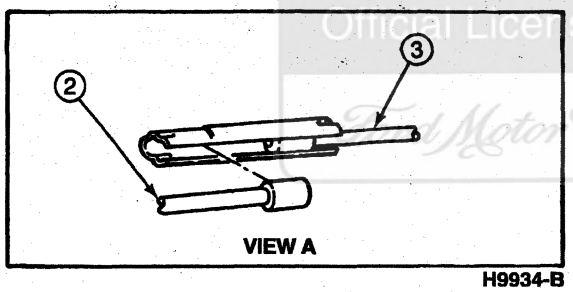

VIEW A

H9934-B

Item	Part Number	Description
1	2780	Parking Brake Control
2	2853	Front Parking Brake Cable and Conduit

(Continued)

Item	Part Number	Description
3	2A793	Intermediate Cable

5. Disconnect the intermediate cable from the parking brake cable equalizer.
6. Remove the intermediate cable from the vehicle.

Installation

1. Follow removal procedure in reverse order.

Official Licensed Product
Ford Motor Company

REMOVAL AND INSTALLATION (Continued)

Parking Brake Cables

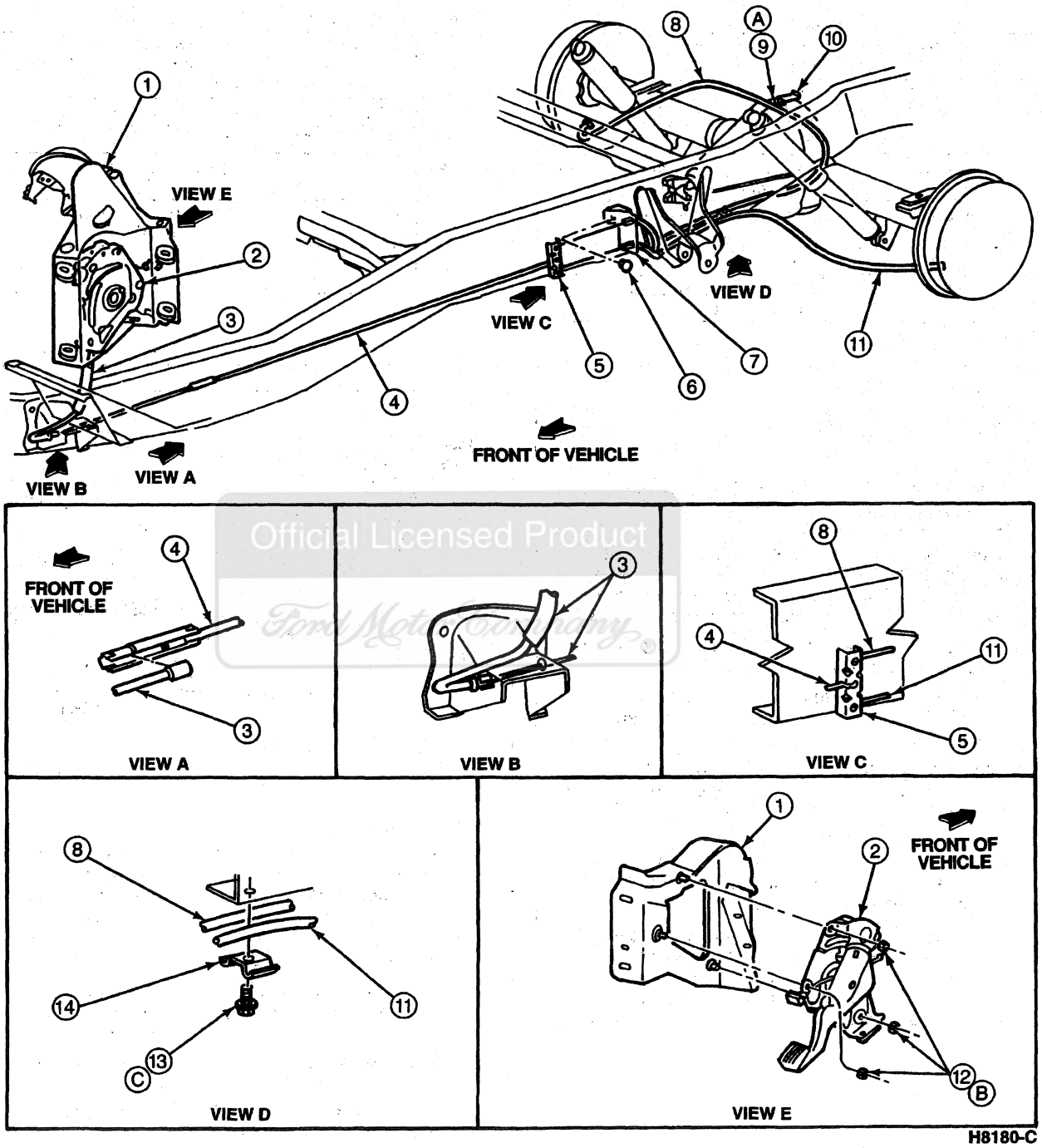

Item	Part Number	Description
1	3B139	Steering Column Support Bracket
2	2780	Parking Brake Control

(Continued)

Item	Part Number	Description
3	2853	Front Parking Brake Cable and Conduit
4	2A793	Cable, Intermediate

(Continued)

REMOVAL AND INSTALLATION (Continued)

Item	Part Number	Description
5	2A602	Parking Brake Cable Equalizer
6	N647097-S	Rivet
7	2530	Parking Brake Cable Bracket
8	2A635	Parking Brake Rear Cable and Conduit, Right
9	57632-S2	Screw and Washer, Cable Clip-to-Differential
10	N804729-S100	Clip
11	2A635	Parking Brake Rear Cable and Conduit, Left

(Continued)

Item	Part Number	Description
12	N620481-S2	Nut, Parking Brake Control-to-Steering Column Support
13	40949-S2	Screw, Cable Clip-to-Frame
14	N800962-S32	Clip, 10 x 10
A	—	Tighten to 17-23 N·m (13-17 Lb-Ft)
B	—	Tighten to 17-23 N·m (13-17 Lb-Ft)
C	—	Tighten to 24-30 N·m (18-22 Lb-Ft)

Cable and Conduit, Rear

Removal

1. Relieve tension on the system by having an assistant pull directly rearward on the intermediate or front parking brake cable and conduit (2853). Using care not to damage the coating on the parking brake cable strand, insert a 4-mm (0.156-inch) drill bit or equivalent into the hole provided in the parking brake control (2780).
2. Raise the vehicle and remove the hub cap, wheel (1007) and brake drum (1126).
3. Disconnect the parking brake rear cable and conduit (2A635) from the parking brake cable equalizer (2A602).
4. Compress the prongs that retain the parking brake rear cable and conduit shield to the parking brake cable bracket (2530) by using a 1/2-inch 12-point box end wrench.
5. With the spring tension released, lift the parking brake rear cable and conduit out of the slot in the parking brake lever (2A637).
6. Working on the wheel side, compress the prongs on the cable retainer so they can pass through the hole in the brake backing plate (2211). Draw the rear parking brake cable retainer and the parking brake rear cable and conduit out of the hole.

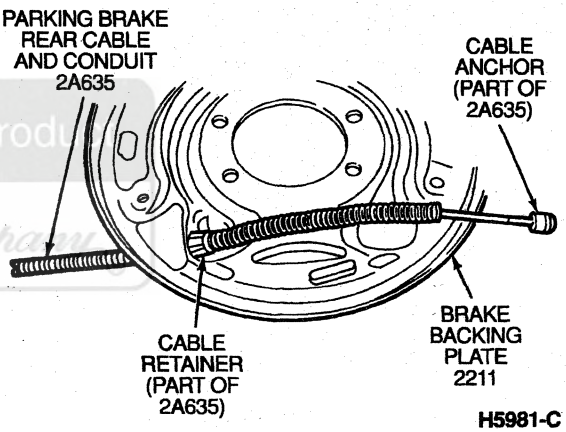

H5981-C

Installation

1. Push the parking brake rear cable and conduit and the rear parking brake cable retainer through the brake backing plate and through the routing clip (if present) until the end of the parking brake rear cable and conduit can be inserted through the slot in the parking brake lever.
2. Insert the front end of the parking brake rear cable and conduit through the parking brake cable bracket until the prongs expand.
3. Install the brake drum, wheel and hub cap, and adjust the brakes. Refer to Section 06-02.
4. Remove the pin inserted in the parking brake control to take up cable slack.
5. Operate the parking brake control three times to verify the parking brake system is functioning properly.

REMOVAL AND INSTALLATION (Continued)

Brake Shoe and Lining, Rear

NOTE: Before servicing the rear brakes, refer to Cable Tension, Release, in the Adjustments portion of this section.

For removal and installation of brake shoes and linings (2001), refer to Section 06-02.

Brake, Parking, Transmission-Mounted, F-Super Duty

Removal

1. Place the transmission (7003) in gear and release the parking brake control (2780). The front parking brake cable and conduit (2853) must be in the fully released position.
2. Raise and support the vehicle.
3. Disconnect and remove the speedometer cable from the left-hand side of the parking brake assembly.
4. Apply a penetrating oil such as Penetrating Lubricant E8AZ-195A501-B or equivalent to the adjusting clevis, jam nut and the threaded end of the front parking brake cable and conduit.
5. Loosen the jam nut and remove the locking pin from the clevis pin.
6. Remove clevis pin and clevis from the parking brake assembly.
7. Remove front parking brake cable and conduit from the bracket on the transmission case (7005).
8. Remove the bolts attaching the driveshaft (4602) to the parking brake assembly output flange.
9. Disconnect the driveshaft and position it out of the way. Wire driveshaft up to the frame (5005).
10. Remove the six hex-head bolts attaching the parking brake assembly to the transmission extension housing.
11. **CAUTION: Keep the vent breather pointing up to prevent oil leakage onto parking brake shoes during storage and handling.**

    Remove the complete parking brake assembly from the transmission.

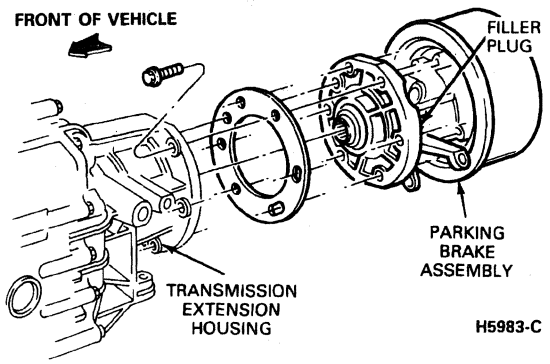

Installation

If a new parking brake assembly is ordered through Ford Parts and Service Division, a container of Motorcraft MERCON® ATF XT-2-QDX or MERCON® equivalent is also provided as part of the kit. This fluid is to be used to fill the parking brake assembly once the assembly is installed onto the transmission.

1. Using two guide bolts or drift pins, attach the parking brake assembly to the transmission splined output shaft (7060) and transmission extension housing.
2. **CAUTION: Do not reuse old bolts.**

   Install six new hex-head bolts (part number N605804-S100) to attach parking brake assembly to the transmission extension housing. Tighten the bolts to 34-57 N·m (25-42 lb-ft).
3. With the parking brake assembly installed, fill the parking brake assembly with Motorcraft MERCON® ATF XT-2-QDX or MERCON® equivalent to the bottom of the filler hole. Install and tighten the filler plug to 35-40 N·m (26-29 lb-ft).
4. Attach the driveshaft to the parking brake assembly output flange and tighten the bolts to 35-54 N·m (26-40 lb-ft).
5. Install the front parking brake cable and conduit into the mounting bracket, and snap into position.

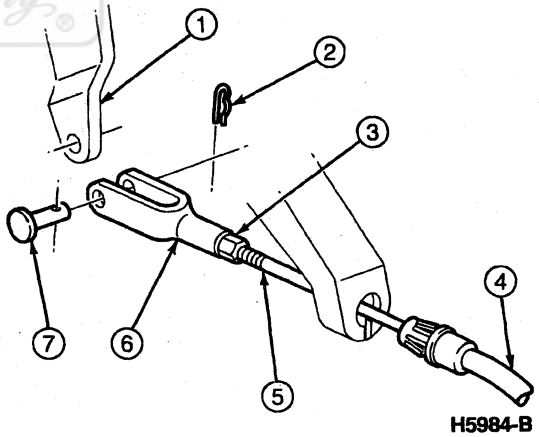

Item	Part Number	Description
1	—	Actuating Arm (Part of 2598)
2	352358-S2	Self-Locking Pin
3	—	Jam Nut (Part of 2598)
4	2853	Front Parking Brake Cable and Conduit
5	—	Threaded End (Part of 2853)
6	—	Clevis (Part of 2853)
7	76007-S8	Clevis Pin

REMOVAL AND INSTALLATION (Continued)

6. Screw the jam nut and adjusting clevis onto the threaded end of the front parking brake cable and conduit.

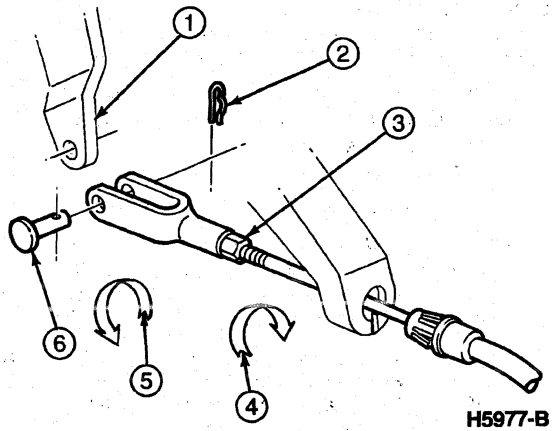

H5977-B

Item	Part Number	Description
1	—	Actuating Arm (Part of 2598) in Applied Position
2	352358-S2	Self-Locking Pin
3	—	Jam Nut (Part of 2853) Loosened
4	—	Cable Lengthening Direction
5	—	Cable Shortening Direction
6	76007-S8	Clevis Pin

7. Hold parking brake actuating lever in the applied position. Turn adjusting clevis onto cable in a clockwise direction.
8. Insert clevis pin through actuating lever and adjusting clevis, while holding cable tight.
9. Remove the clevis pin. Rotate the clevis 10 full turns in the counterclockwise (loosening) direction to lengthen the cable about 12 mm (0.5 inch).
10. Install clevis pin and locking pin.
11. Install speedometer cable.
12. Lower vehicle.

Signal Switch and Bracket, Parking Brake

The parking brake signal switch and bracket is an integral part of the parking brake control (2780) and is not separately serviceable.

Indicator Bulb, Brake System Warning

Refer to Section 13-01.

CLEANING AND INSPECTION

Parking Brakes

WARNING: DO NOT INHALE DUST FROM BRAKES OR ASSOCIATED COMPONENTS. INHALATION OF DUST CAN BE HAZARDOUS TO YOUR HEALTH AND CAN CAUSE CANCER OR ASBESTOSIS. COMPRESSED AIR OR BRUSHES MUST NOT BE USED TO CLEAN BRAKES, BRAKE DRUMS (1126) AND ASSOCIATED COMPONENTS. A VACUUM CLEANER SUCH AS ROTUNDA BRAKE/CLUTCH/SERVICE VACUUM 164-R3600 OR EQUIVALENT EQUIPPED FOR THIS PURPOSE SHOULD BE CAREFULLY USED TO REMOVE DUST. ADHERENT DUST MUST BE REMOVED WITH A DAMP RAG. DUST MUST BE CONTAINED IN A SEALED AND LABELED BAG FOR DISPOSAL. WEAR AN APPROVED HIGH-EFFICIENCY CARTRIDGE OR AIR LINE RESPIRATOR AND USE EXTRA CAUTION TO AVOID BREATHING THIS DUST.

Use denatured alcohol to clean component parts. Allow the parts to completely air dry. Apply Ford High Performance DOT 3 Brake Fluid C6AZ-19542-AA or equivalent DOT 3 fluid meeting Ford specification ESA-M6C25-A to the rear wheel cylinder internal parts before assembly.

WARNING: BRAKE FLUID CONTAINS POLYGLYCOL ETHERS AND POLYGLYCOLS. AVOID CONTACT WITH EYES. WASH HANDS THOROUGHLY AFTER HANDLING. IF BRAKE FLUID CONTACTS EYES, FLUSH EYES WITH RUNNING WATER FOR 15 MINUTES. GET MEDICAL ATTENTION IF IRRITATION PERSISTS. IF TAKEN INTERNALLY, DRINK WATER AND INDUCE VOMITING. GET MEDICAL ATTENTION IMMEDIATELY.

CAUTION: Do not use denatured alcohol for flushing the system or cleaning assemblies where alcohol could be trapped and subsequently contaminate the brake fluid. Contaminated fluid can cause eventual failure of rubber components in the system.

Signal Switch and Bracket, Parking Brake

1. Inspect the parking brake control (2780) and remove any debris that may interfere with the operation of the parking brake control or the parking brake signal switch and bracket.
2. Remove and replace the parking brake signal switch and bracket connector several times to improve contact.
3. Apply the parking brake and turn the key to ON. The brake warning indicator should illuminate.
4. Release the parking brake control and the brake warning indicator should go out.

CLEANING AND INSPECTION (Continued)

Brakes, Rear

1. On vehicles with rear wheel parking brakes, remove the brake drums (1126).
2. Inspect the brake drums and remove any dirt or other contaminants.
3. Inspect the brake drums for scoring, cracks or other damage. Turn the brake drums or replace as necessary.
4. Inspect the rear brake components and check for missing, damaged or misaligned parts. Repair or replace as necessary.
5. Inspect the rear wheel cylinders (2261) and check for leaking brake fluid. Determine the source of any leaks and repair or replace components as necessary.
6. Inspect the rear wheel cylinder dust boots for bulges, which may indicate contaminated brake fluid. Repair or replace components as necessary.
7. Check for rust around the rear wheel cylinder dust boots, which may indicate water leaking into the rear wheel cylinders. Repair or replace components as necessary.
8. Inspect the rear brake shoes and linings (2200) for contamination or damage. Replace as necessary.
9. Observing cautions and warnings, remove any dirt, debris or other contaminants found in the rear brake system.

ADJUSTMENTS

Parking Brake, Cable-Actuated Rear Wheel, F-250 Heavy Duty and F-350

The parking brake systems are self-adjusting and require no adjustment.

Cable Tension, Release

1. Raise and support the vehicle enough to gain access to the front parking brake cable and conduit (2853) or the intermediate cable.
2. Remove the cowl side trim panel (02344).
3. Have an assistant pull and hold the front parking brake cable and conduit or the intermediate cable rearward.
4. Insert a 4-mm (0.156-inch) drill bit or equivalent pin into the hole provided in the parking brake control (2780).

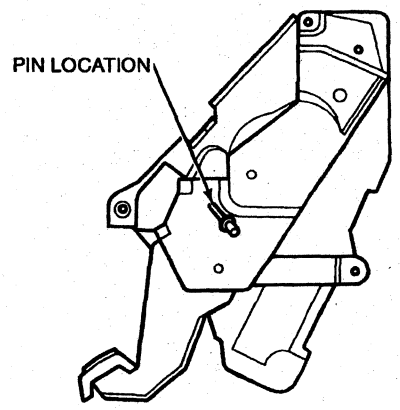

Parking Brake, Cable-Actuated, Transmission-Mounted, F-Super Duty

Field Adjustment, Foot-Actuated Lever

Use this adjustment to correct excessive parking brake control travel.

1. Place the transmission (7003) in neutral and release the parking brake.
2. Raise and support the vehicle.
3. NOTE: Apply a lubricant such as Ford Penetrating Lubricant E8AZ-19A501-B or equivalent to the jam nut, threaded rod and the clevis to ease adjustment.

   Loosen the jam nut several turns.

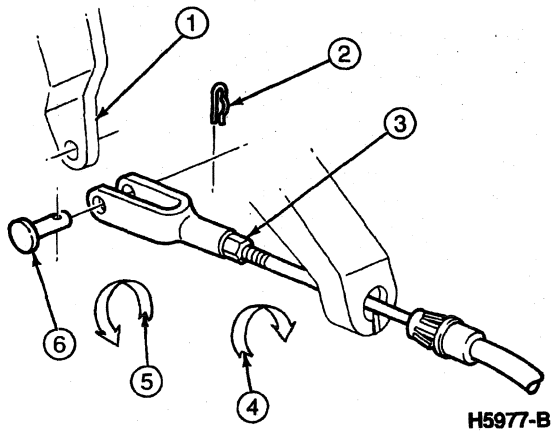

Item	Part Number	Description
1	—	Actuating Lever (Part of 2598) in Applied Position
2	352358-S2	Self-Locking Pin

(Continued)

ADJUSTMENTS (Continued)

Item	Part Number	Description
3	—	Jam Nut (Part of 2853) Loosened
4	—	Cable Lengthening Direction
5	—	Cable Shortening Direction
6	76007-S8	Clevis Pin

4. Remove the self-locking pin and the clevis pin from the adjusting clevis.
5. Hold actuating lever in applied position.
6. Screw clevis onto threaded end of the front parking brake cable and conduit (2853) until actuating lever hole and clevis holes line up.
7. Lengthen the front parking brake cable and conduit approximately 13 mm (0.5 inch).
8. Position clevis over actuating lever. Install clevis pin and self-locking pin.
9. Rotate driveshaft (4602) to make sure parking brake shoes are not dragging against parking brake drum.
10. Tighten the jam nut to 19-27 N·m (14-20 lb-ft).
11. Lower the vehicle.
12. Test the parking brake operation.

SPECIFICATIONS

LUBRICANT/ADHESIVE/CLEANER SPECIFICATIONS

Description	Part Number	Ford Specification
Penetrating Lubricant	E8AZ-195A501-B	—
Motorcraft MERCON® ATF	XT-2-QDX	MERCON®
Silicone Brake Caliper Grease and Dielectric Compound	D7AZ-19A331-A (Motorcraft WA-10)	ESE-M1C171-A

TORQUE SPECIFICATIONS

Description	N·m	Lb-Ft
Nuts, Control Assembly Mounting	17-23	13-17
Screw, Clip-to-Frame	24-30	18-22
Screw, Cable Retainer at Axle Housing	17-23	13-17
TRANSMISSION MOUNTED PARKING BRAKE		
Parking Brake Case to Transmission Bolts	34-57	25-42
Driveshaft to Output Flange	35-54	26-40
Filler Plug	35-40	26-29
Jam Nut	19-27	14-20
Cable and Conduit to Frame Clamp Bolt	22-28	16-21

SPECIAL SERVICE TOOLS/EQUIPMENT

ROTUNDA EQUIPMENT

Model	Description
164-R3600	Brake/Clutch/Service Vacuum

Official Licensed Product
Ford Motor Company

SECTION 06-06 Brake System, Hydraulic

SUBJECT	PAGE
VEHICLE APPLICATION	06-06-1
DESCRIPTION AND OPERATION	
Brake Load Sensor Proportioning Valve	06-06-9
Brake Master Cylinder	06-06-5
Brakes, Front	06-06-8
Brakes, Rear	06-06-7
Dual Hydraulic Brake System	06-06-8
Brake Master Cylinder Reservoir with Brake Master Cylinder Fluid Level Sensor	06-06-8
Brake System	06-06-1
Brake System, Anti-Lock, Rear	06-06-11
Fluid Control Valve, Brake Master Cylinder	06-06-8
Stoplight Switch	06-06-8
DIAGNOSIS AND TESTING	
Brake System	06-06-11
REMOVAL AND INSTALLATION	
Brake Hose, Front	06-06-19
Brake Line Replacement	06-06-19
Brake Load Sensor Proportioning Valve, F-Super Duty Chassis Cab	06-06-17
Brake Master Cylinder Fluid Level Sensor	06-06-17
Brake Master Cylinder Reservoir	06-06-16
Brake Master Cylinder, F-250 Heavy Duty and F-350	06-06-15
Brake Pedal and Bracket, All Except F-Super Duty Motorhome	06-06-11
Removal	06-06-11

SUBJECT	PAGE
REMOVAL AND INSTALLATION (Cont'd.)	
Brake Pedal and Bracket, F-Super Duty Motorhome	06-06-13
Fluid Control Valve, Brake Master Cylinder	06-06-19
Stoplight Switch	06-06-19
DISASSEMBLY AND ASSEMBLY	
Brake Master Cylinder	06-06-19
SERVICE PROCEDURES	
Hydraulic System Bleeding	06-06-20
Anti-Lock Brake System Bleeding	06-06-23
Brake Master Cylinder Bleeding, Bench	06-06-20
Brake Master Cylinder Bleeding, On-Vehicle	06-06-21
Manual Bleeding	06-06-22
Pressure Bleeding	06-06-23
CLEANING AND INSPECTION	
Brake Lines and Hose	06-06-24
Brake Fluid Leakage	06-06-24
Brake Master Cylinder	06-06-24
ADJUSTMENTS	
Brake Booster to Master Cylinder Push Rod	06-06-26
Brake Load Sensor Proportioning Valve	06-06-26
Brake Pedal Linkage, F-Super Duty Motorhome Chassis	06-06-25
SPECIFICATIONS	06-06-28
SPECIAL SERVICE TOOLS/EQUIPMENT	06-06-29

VEHICLE APPLICATION

F-250 Heavy Duty, F-350 and F-Super Duty

DESCRIPTION AND OPERATION

Brake System

WARNING: BRAKE FLUID CONTAINS POLYGLYCOL ETHERS AND POLYGLYCOLS. AVOID CONTACT WITH EYES. WASH HANDS THOROUGHLY AFTER HANDLING. IF BRAKE FLUID CONTACTS EYES, FLUSH EYES WITH RUNNING WATER FOR 15 MINUTES. GET MEDICAL ATTENTION IF IRRITATION PERSISTS. IF TAKEN INTERNALLY, DRINK WATER AND INDUCE VOMITING. GET MEDICAL ATTENTION IMMEDIATELY.

In a modern braking system, the driver of the vehicle provides force by pushing down on the brake pedal (2455). In power brake systems, this force is increased by a vacuum or hydraulic power brake booster (2005) and is applied to the brake master cylinder (2140). The force applied to the brake master cylinder pistons transmits pressure through the brake lines to each brake piston, resulting in braking action at each wheel (1007).

The system consists of the following:

- power brake booster
- brake master cylinder
- brake pressure control valves
- brake tubes and hoses
- anti-lock brake system (ABS) components

The dual brake system is split front and rear with the front wheel brakes comprising one circuit and the rear wheel brakes, the other circuit.

DESCRIPTION AND OPERATION (Continued)

Brake System, F-250 Heavy Duty and F-350, Typical

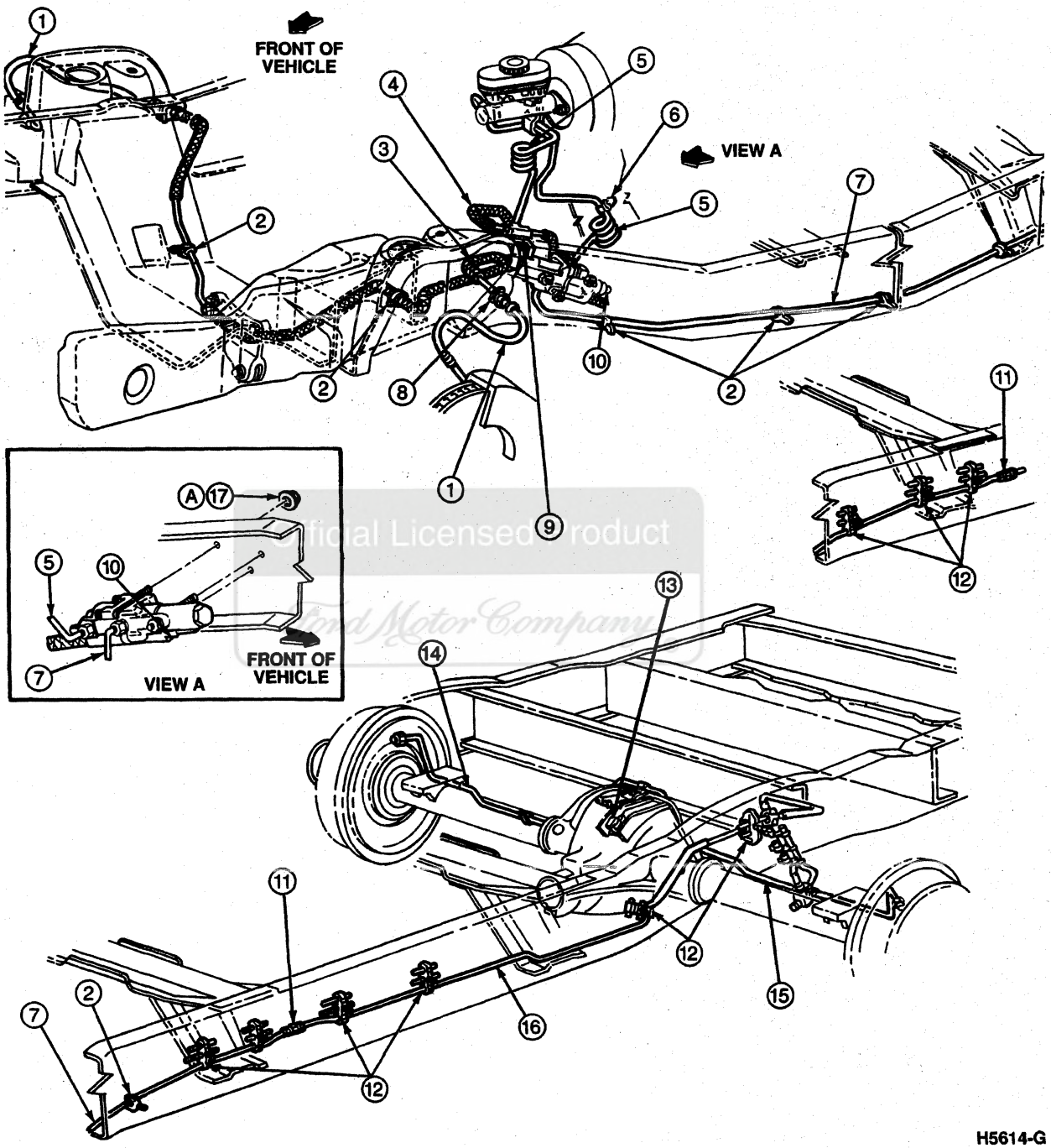

H5614-G

Item	Part Number	Description
1	2078	Front Brake Hose
2	N802768	Single Clip
3	2264	Front Brake Tube (RH)

(Continued)

Item	Part Number	Description
4	2263	Front Brake Tube (LH)
5	2264	Front Brake Tube
6	N804645	Clip
7	2078	Brake Tube

(Continued)

DESCRIPTION AND OPERATION (Continued)

Item	Part Number	Description
8	2814	Brake Hose Clip
9	2C267	Tee Assy
10	2B373	Anti-Lock Brake Control Module
11	383057	Union
12	N802770	Triple Clip
13	2C190	Rear Brake Anti-Lock Sensor

(Continued)

Item	Part Number	Description
14	2267	Rear Brake Tube (RH)
15	2267	Rear Brake Tube (LH)
16	2265	Tube
17	N620398-S36	Anti-Lock Brake Control Module-to-Frame
A	—	Tighten to 17-23 N·m (13-17 Lb-Ft)

The ability of a brake system to stop the vehicle is dependent on the available traction.

Assuming there is traction, a brake system has to deal with other critical requirements. There must be a balance of the brake forces applied from side to side. If this were not the case, several things might happen. The vehicle might pull to one side or the wheels on one side might lock up prematurely, which could result in a skid.

Another important requirement is having the front and rear brake forces balanced. This allows all four wheels to use available traction and stop the vehicle in the shortest distance. Lightly loaded wheels may lose traction with less braking force than heavily loaded wheels.

For example, the black truck in the following illustration is carrying its maximum-rated load in the truck bed. For maximum brake performance, it needs more brake force directed to the rear, because the weight distribution gives the rear more traction. The white truck is empty in the rear and carrying a snow plow on the front. For maximum brake performance, it needs less braking power in the rear and more in the front. That is one of the reasons manufacturers provide gross axle weight ratings as well as gross vehicle weight ratings on each truck. There are limits to the loading and weight distribution that the truck is designed to accommodate. Exceeding these limits can adversely affect the brake performance.

Balanced Brakes

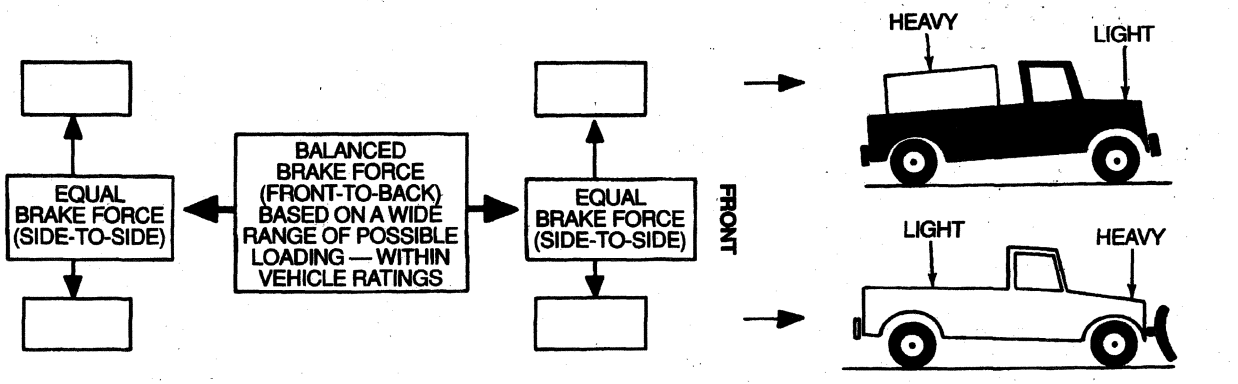

H9780-A

Besides making sure that the maximum brake force is directed where it is needed to provide shorter stopping distances, brake balance also makes sure that the wear on brake pads and linings will be reasonably equal under normal operating conditions. This makes the required brake system maintenance more predictable.

DESCRIPTION AND OPERATION (Continued)

Brake Fluid

The general principles of hydraulics apply to any fluid in a closed system. But this does not mean that just any fluid can be used in a braking system. The fluid used in Ford vehicles, Ford High Performance DOT 3 Brake Fluid C6AZ-19542-AA, is specially engineered to meet the unique requirements of the hydraulic braking system.

- It does not corrode the metal parts of the brake system or attack the rubber parts.
- It is free-flowing, even at very low temperatures.
- Its freezing point is well below the coldest temperatures at which the vehicle can be driven.
- Its boiling point when new is at least 288°C (550°F), well above normal operating temperatures (not all DOT 3 brake fluids meet this high standard).
- It lubricates pistons and cups so they last longer.

Use only brake fluid that meets or exceeds Ford specification ESA-M6C25-A.

Brake Fluid Boiling Point

One of the key aspects of brake fluid quality is the temperature at which it boils. A comparison of the boiling points for DOT 3 (in general), Ford DOT 3 and DOT 5 brake fluids is shown. If brake fluid boils in the brake system, it forms vapor that reduces the ability of the brake system to develop hydraulic line pressure. If brake fluid boils, the system acts just like a system with air in the lines, except that it reverts to normal operation when the brakes cool and the vapor condenses.

BRAKE FLUID BOILING POINTS AND MINIMUM FEDERAL SAFETY STANDARDS

	°F		°C	
	Dry	Wet	Dry	Wet
DOT 3	401°	284°	205°	140°
DOT 5	500°	356°	260°	180°
Ford DOT 3	550° (Exceeds Requirements)		288° (Exceeds Requirements)	

NOTE: A newly opened can exceeds all minimum requirements.

Brake fluid absorbs moisture from the air and must be stored in the original container with the cap fastened securely. If not, its moisture content will increase and the boiling point will drop. Moisture also will be absorbed while the fluid is in the brake system, but a properly capped and sealed brake master cylinder reservoir will limit the rate at which this occurs.

DOT Differences

DOT 3 is the standard brake fluid in the U.S. for cars and light trucks. It is colorless. Ford High Performance DOT 3 Brake Fluid far exceeds minimum federal standards when new. This advantage continues with ordinary use and proper maintenance of the brake system. Any DOT 3 fluid will absorb moisture rapidly if its container is left open during storage or if damaged brake master cylinder reservoir seals allow large amounts of moisture to enter the brake system.

WARNING: DO NOT USE DOT 5 BRAKE FLUID IN A SYSTEM DESIGNED FOR DOT 3 BRAKE FLUID.

CAUTION: There have been reports of damage to seals resulting when DOT 5 is mixed with or substituted for DOT 3 in a system designed for DOT 3.

DOT 5 is a silicone-based fluid. It is purple in color. DOT 5 has good wet and dry boiling points. However, it is more compressible than DOT 3 and has been reported to give a "soft" pedal feel in operation. DOT 5 does not readily mix with DOT 3.

Moisture entering a system with DOT 5 does not combine with the fluid as it does with DOT 3. A good comparison is gasoline with and without a moisture controlling additive. DOT 3 is like gasoline with an additive: the moisture blends with the fluid. DOT 5 behaves like gasoline without an additive. The moisture doesn't fully blend with the fluid. When enough moisture is present, pockets (or puddles) of water form. These pockets or puddles migrate to low points in the system, such as rear wheel cylinders (2261) and disc brake calipers (2B120). At high enough temperatures, this water will boil. At very low temperatures, it will freeze and form ice.

In summary, the drawbacks of DOT 5 are that it doesn't mix well with DOT 3 and it doesn't fully blend with water that may enter the system. As a result, it may require changing more frequently.

Ford High Performance DOT 3 Brake Fluid is the best brake fluid for all Ford vehicles built for the North American market (and many competitive vehicles as well). It is the only brake fluid approved for Ford warranty service.

Keeping Brake Fluid Cool

Along with being kept as dry as possible, the fluid in a vehicle's braking system must also be protected from excessive heat. Since braking generates heat, even the best of fluids may develop vapor pockets if the driver rides the brakes or the brakes drag due to poor maintenance.

When descending long, steep grades, drivers should downshift the transmission to assist in controlling vehicle speed and to reduce the load on the brake system. Overloading a vehicle or towing a trailer with inadequate trailer brakes may also cause excessive heat buildup.

Heat buildup in the engine compartment can adversely affect the braking system due to the following:

- a poorly-tuned engine
- cooling system inefficiency

DESCRIPTION AND OPERATION (Continued)

- a modified exhaust system
- modifications that increase engine output (such as a turbocharger)
- airflow restrictions
- exceeding gross vehicle weight ratings (GVWR) or gross combination weight ratings (GCWR)

Heat buildup can also result when brake components and brake lines are too close to hot engine and exhaust components. If it is suspected that the brake fluid in a system is vaporizing, check for possible external heat sources. If the vehicle has been modified, certain areas or components may have to be shielded from these external heat sources.

Brake Master Cylinder

The brake master cylinder (2140) is a dual-piston type. When the brake pedal (2455) is depressed, pressure is applied by mechanical linkage to the primary and secondary pistons in the brake master cylinder. The brake master cylinder pistons, in turn, apply hydraulic pressure to the front and rear brake systems.

Brake Master Cylinder, Cutaway View

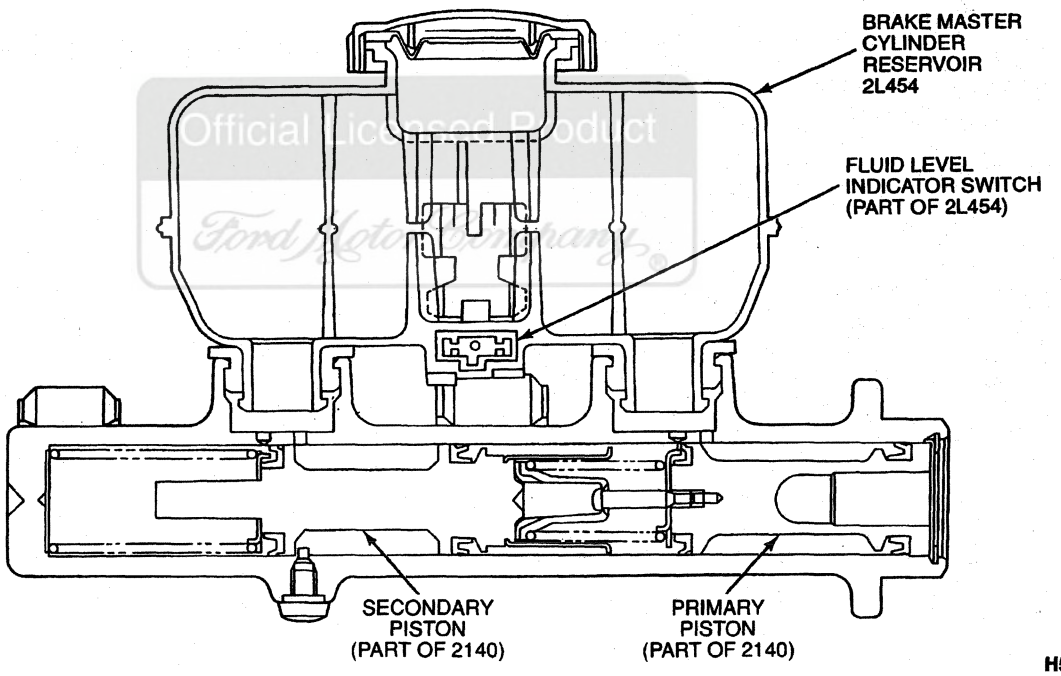

Official Licensed Product
Ford Motor Company

DESCRIPTION AND OPERATION (Continued)

Brake Master Cylinder Operation, F-250 Heavy Duty and F-350

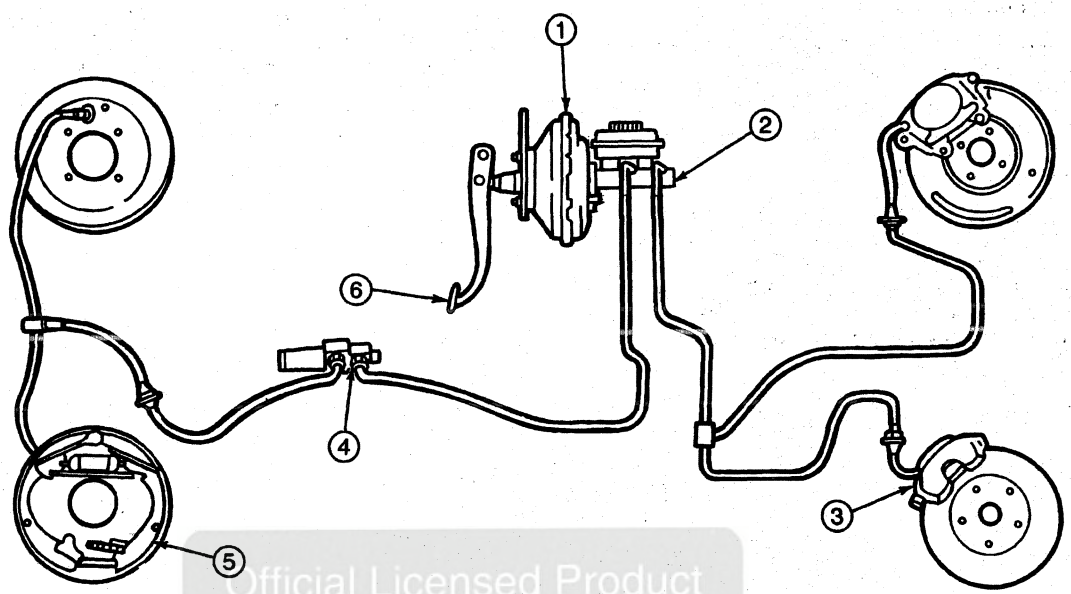

H4880-E

Official Licensed Product
Ford Motor Company

Item	Part Number	Description
1	2005	Power Brake Booster
2	2140	Brake Master Cylinder
3	2B120	Disc Brake Caliper

(Continued)

Item	Part Number	Description
4	2B373	Anti-Lock Brake Control Module
5	2200	Rear Brake Shoe and Lining
6	2455	Brake Pedal

On all vehicles except F-Super Duty, the brake master cylinder is assisted by a power brake booster (2005). On F-Super Duty, a Bendix Hydro-Boost is used. Information about the vacuum booster is in Section 06-07A. Information on the Bendix Hydro-Boost is in Section 06-07C.

DESCRIPTION AND OPERATION (Continued)

Brake Master Cylinder Operation, F-Super Duty Chassis Cab

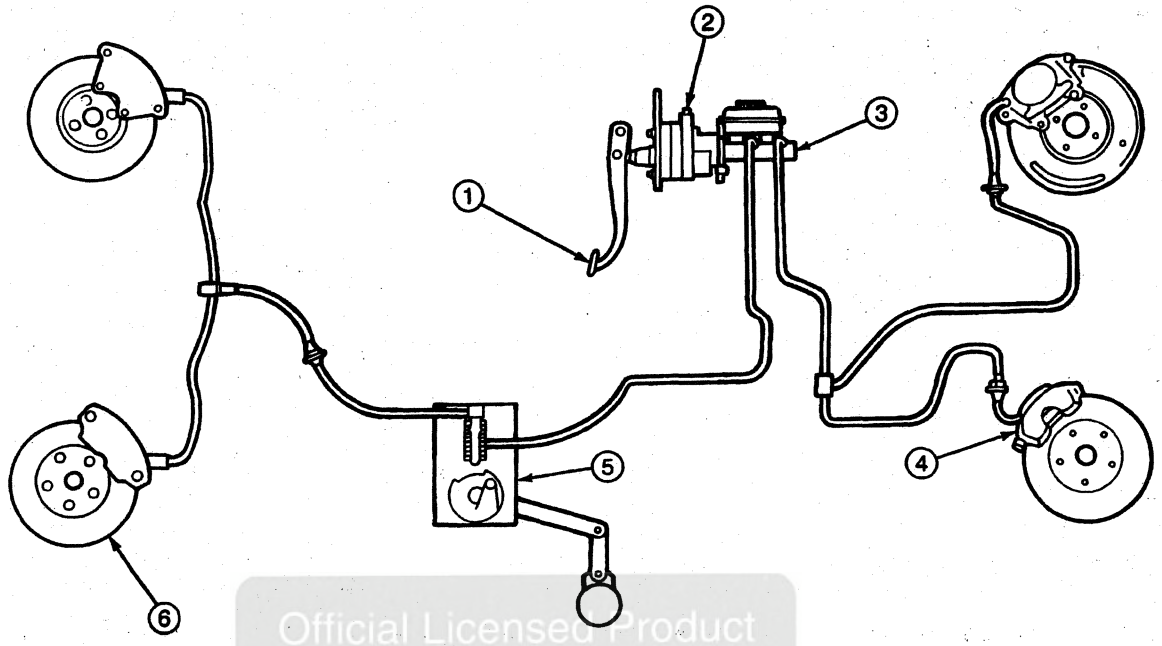

H6272-D

Official Licensed Product
Ford Motor Company

Item	Part Number	Description
1	2455	Brake Pedal
2	2005	Power Brake Booster
3	2140	Brake Master Cylinder
4	2B120	Disc Brake Caliper

Item	Part Number	Description
5	2B547	Brake Load Sensor Proportioning Valve
6	1102	Disc Brake Hub and Rotor, Rear

(Continued)

Brakes, Rear

The rear drum brake system includes the following components:

- brake drums (1126)
- brake shoe retracting springs (2035)
- brake shoe hold-down springs (2068)
- brake shoe hold-down spring pins (2069)
- leading and trailing brake shoe and lining (2001)
- rear wheel cylinders (2261)
- LH rear brake backing plate (2212) and RH brake backing plate (2211)

The rear drum brakes are a standard system with rear wheel cylinders mounted at the top of the rear brake backing plates.

The rear brake system is a more complex system. Trucks are designed to carry a wider range of loads under more severe driving conditions than passenger cars. As explained earlier, the heavier the load in the rear, the more braking force can be applied.

It is also true that trucks often run with light or no loads. Whatever the loading, truck rear brakes have to provide sufficient braking force without causing the rear wheels to lock up prematurely.

The rear disc brake system includes the following components:

- brake shoes and linings
- rear disc brake calipers (F-Super Duty only)
- rear disc brake rotors (F-Super Duty only)
- rear brake hoses

The F-Super Duty disc brake is of the rail slider caliper design, with two caliper pistons on the same side of the disc brake rotor. The unit consists of a rear disc brake caliper that slides on two rails.

The caliper contains the two caliper pistons. The caliper pistons and caliper bores are protected by boot seals fitted to a groove in the caliper piston and a groove in the rear disc brake caliper housing.

DESCRIPTION AND OPERATION (Continued)

Brakes, Front

The front disc caliper used on F-250 Heavy Duty and F-350 vehicles is a dual pin sliding disc brake caliper, dual piston type. The system has a dual brake master cylinder and front disc brake hub and rotor.

The front disc caliper used on F-Super Duty vehicles is a rail slider disc brake caliper, dual piston type. The system uses a dual brake master cylinder and a Hydro-Boost brake booster.

Dual Hydraulic Brake System

To protect against total brake failure caused by worn or damaged parts, the dual hydraulic brake system is split into front and rear subsystems. The front brakes are served by one brake master cylinder piston and outlet port, and the rear brakes are served by the other brake master cylinder piston and outlet port.

Stoplight Switch

Refer to Section 17-01.

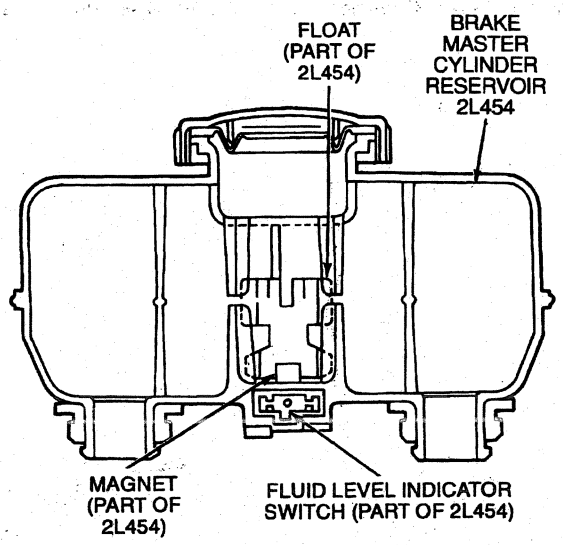

Brake Master Cylinder Reservoir with Brake Master Cylinder Fluid Level Sensor

The brake master cylinder sensor is an integral part of the brake master cylinder reservoir. It is serviced as a part of the brake master cylinder reservoir. It consists of a float containing a magnet and a reed switch mounted in the bottom of the brake master cylinder reservoir. When the fluid in the brake master cylinder reservoir gets to a predetermined level, the floating magnet actuates the reed switch, causing the warning lamp to light. Loss of fluid from either the primary (front) or secondary (rear) system will cause this system to actuate.

If the brake master cylinder sensor is inoperative, the brake master cylinder reservoir must be replaced.

Fluid Control Valve, Brake Master Cylinder

The brake master cylinder fluid control valve (2C161) regulates the hydraulic pressure in the rear brake system. It is located on the brake master cylinder (2140) and is screwed into the rearmost outlet port. When the brake pedal (2455) is applied, the full brake fluid pressure passes through the brake master cylinder fluid control valve to the rear brake system until the valve's split point is reached. Above its split point, the brake master cylinder fluid control valve begins to reduce the hydraulic pressure to the rear brakes, creating a balanced braking condition between the front and rear wheels (1007) to minimize rear wheel lockup during hard braking.

Official Licensed Product

DESCRIPTION AND OPERATION (Continued)

In case of front brake system malfunction, the brake master cylinder fluid control valve has a bypass feature that allows full hydraulic pressure to the rear brake system.

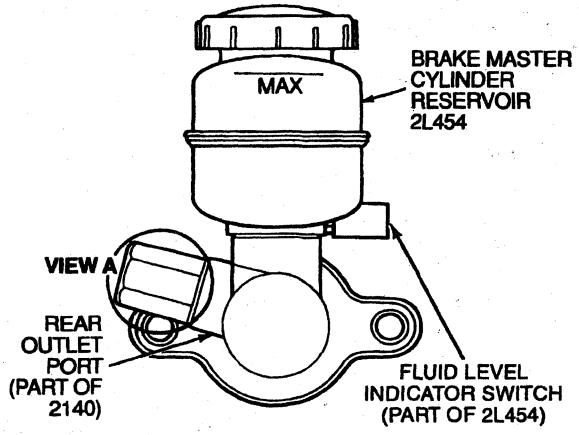

BRAKE MASTER CYLINDER WITH INTEGRAL BRAKE MASTER CYLINDER FLUID CONTROL VALVE FRONT VIEW

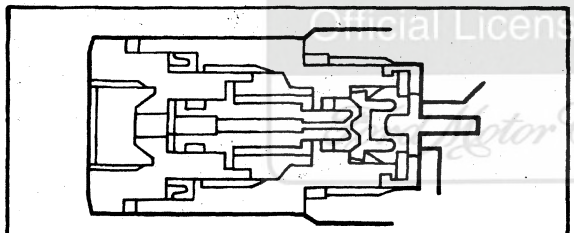

INTEGRAL BRAKE MASTER CYLINDER FLUID CONTROL (PROPORTIONING) VALVE WITH BY-PASS FEATURE VIEW IN CIRCLE A

H5609-F

Official Licensed Product Motor Company

Brake Load Sensor Proportioning Valve

The brake load sensor proportioning valve (2B547) is used on F-Super Duty vehicles only. The brake load sensor proportioning valve regulates rear brake hydraulic pressure when the vehicle is in the lightly loaded condition and allows full braking pressure to the rear disk brake calipers when the vehicle is carrying a full load.

DESCRIPTION AND OPERATION (Continued)

Brake Load Sensor Proportioning Valve, F-Super Duty Chassis Cab

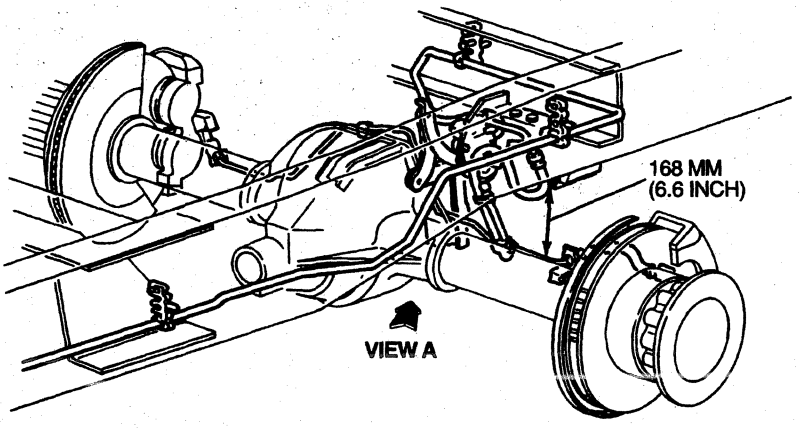

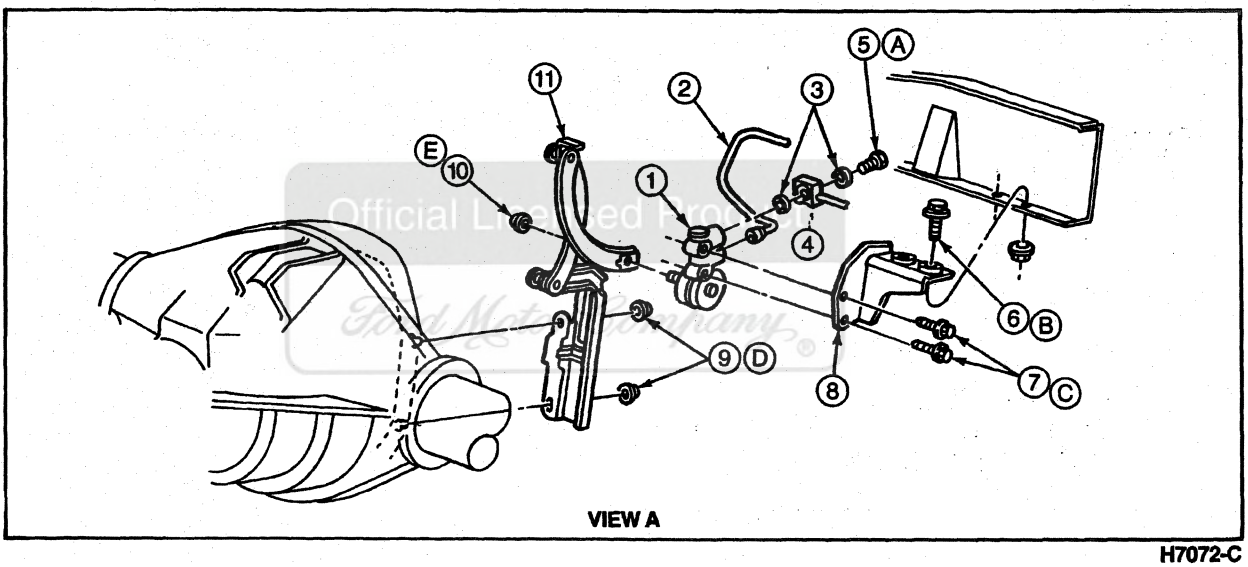

H7072-C

Item	Part Number	Description
1	2B547	Brake Load Sensor Proportioning Valve
2	2265	Brake Tube
3	388949-S	Copper Washer
4	2282	Rear Brake Hose
5	385116-S2	Bolt
6	N605789	Bolt
7	56522	Bolt
8	2B256	Bracket
9	379930	Nut

(Continued)

Item	Part Number	Description
10	379930	Nut
11	2C193	Linkage
A	—	Tighten to 23-34 N·m (17-25 Lb-Ft)
B	—	Tighten to 26-41 N·m (19-30 Lb-Ft)
C	—	Tighten to 30-40 N·m (22-30 Lb-Ft)
D	—	Tighten to 34-46 N·m (25-34 Lb-Ft)
E	—	Tighten to 15-20 N·m (11-15 Lb-Ft)

DESCRIPTION AND OPERATION (Continued)

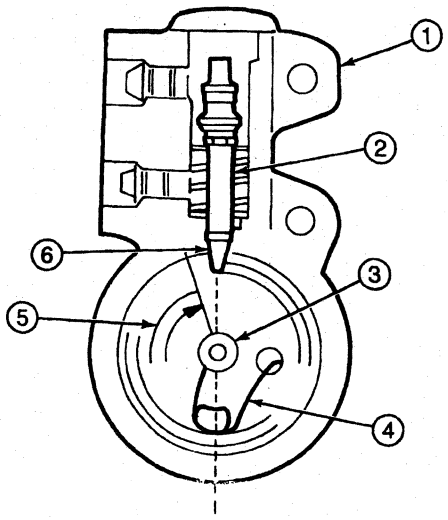

H4881-B

Item	Part Number	Description
1	2B547	Brake Load Sensor Proportioning Valve
2	—	Plunger (Part of 2B547)
3	—	Shaft (Part of 2B547)
4	—	Torsional Clutch Spring (Part of 2B547)
5	—	Digital Cam (Part of 2B547)
6	—	Stainless Steel Pin (Part of 2B547)

Official Licensed Product

Brake System, Anti-Lock, Rear

Refer to Section 06-09.

DIAGNOSIS AND TESTING

Brake System

Refer to Section 06-00.

REMOVAL AND INSTALLATION

Brake Pedal and Bracket, All Except F-Super Duty Motorhome

Removal

1. Disconnect the wires from the stoplight switch (13480) located below instrument panel (04320).
2. Remove the pin and spacer connecting the brake pedal (2455), stoplight switch and master cylinder push rod together.
3. Remove stoplight switch, master cylinder push rod and brake master cylinder push rod spacer (2B129) from pin on brake pedal. If vehicle is equipped with speed control, leave speed control bracket in place.
4. On vehicles equipped with manual transmissions (7003), disconnect the clutch pedal retracting spring.
   a. Remove the nut on the clutch rod lever.
   b. Remove the lever, washer spring, and brake and clutch pedal bushing (2461).
   c. Push the clutch pedal (7519) to the side enough for the brake pedal to come off the clutch and brake pedal pivot shaft (7506).
   d. Take off the brake and clutch pedal bushings.
5. NOTE: Some vehicles might have an E-clip type retainer instead of a hair pin clip type retainer.
   On vehicles equipped with automatic transmissions, remove one spring retainer and brake and clutch pedal bushing from the clutch and brake pedal pivot shaft. From the other end, pull out the shaft and remove the brake pedal. Remove the bushings and washer spring from the brake pedal.
6. Remove the stoplight switch from the bracket on the brake pedal.
7. Remove the brake pedal pad (2454), if required.

REMOVAL AND INSTALLATION (Continued)

Brake Pedal Installation, F-250 Heavy Duty, F-350

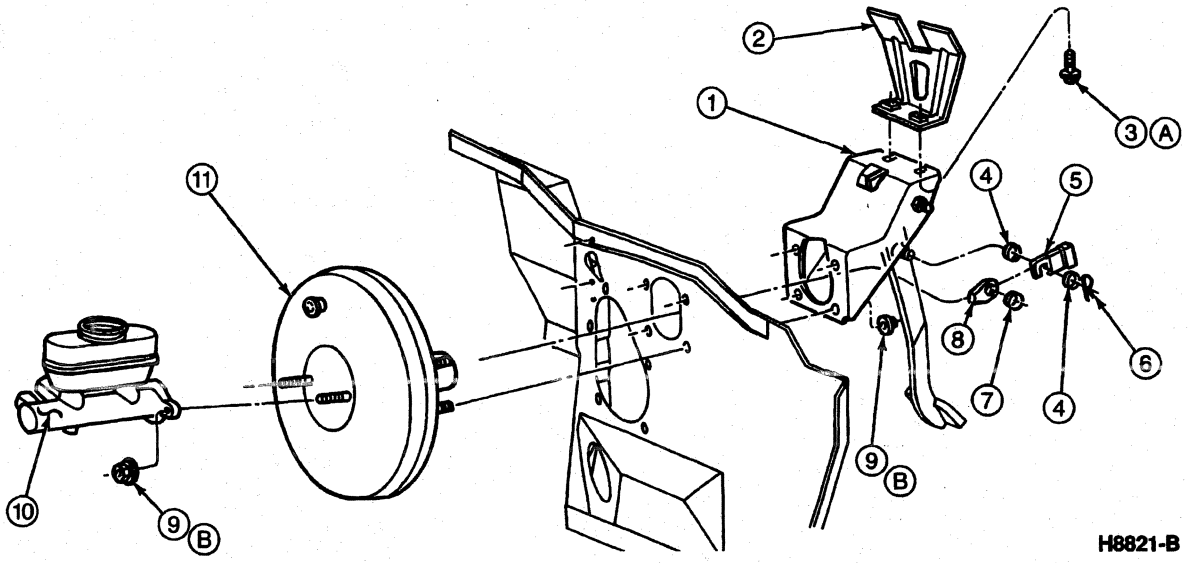

Item	Part Number	Description
1	2450	Brake Pedal and Bracket Assy
2	—	Y-Brace (Part of 2450)
3	N606687-S2	Screw and Washer
4	2B129	Brake Master Cylinder Push Rod Spacer
5	13480	Stoplight Switch
6	380699-S100	Self-Locking Pin
7	2474	Brake Master Cylinder Push Rod Bushing

Item	Part Number	Description
8	—	Brake Pedal Push Rod (Part of 2005)
9	382802-S2	Nut
10	2140	Brake Master Cylinder
11	2005	Power Brake Booster
A	—	Tighten to 20-27 N·m (15-20 Lb-Ft)
B	—	Tighten to 18-34 N·m (13-25 Lb-Ft)

(Continued)

Installation

1. Install the brake pedal pad on the brake pedal, if required.
2. Install the stoplight switch on the brake pedal.
3. Place brake master cylinder push rod bushing (2474) and washer spring in position on the brake pedal.
4. For manual transmission, perform the following:
   a. Position the brake pedal in the bracket.
   b. Slide the clutch pedal so the clutch and brake pedal pivot shaft goes through the hub of the brake pedal.
   c. Install the brake and clutch pedal bushing, clutch rod and lever onto the clutch and brake pedal pivot shaft.
   d. Position the nut holding the clutch lever to clutch and brake pedal pivot shaft and tighten.
   e. Connect the clutch pedal retracting spring.
5. For automatic transmission, perform the following:
   a. Position the brake pedal in the bracket.
   b. Slide the clutch and brake pedal pivot shaft through the bracket and hub on the brake pedal.
   c. Install brake and clutch pedal bushing and spring retainers on the clutch and brake pedal pivot shaft.
6. Place the brake and clutch pedal bushing, brake master cylinder push rod spacer, stoplight switch and brake master cylinder push rod onto the pin on the brake pedal. Install the brake master cylinder push rod spacer and cotter pin.
7. Connect wires to stoplight switch. Check unit for correct operation.

REMOVAL AND INSTALLATION (Continued)

Brake Pedal and Bracket, F-Super Duty Motorhome

Removal

1. Working inside the vehicle below the instrument panel (04320), disconnect the wires from the stoplight switch (13480). Remove the locking pin and washer. Remove the clevis pin connecting the bell crank rod to the brake pedal (2455).
2. Remove the nut and bolt holding the brake pedal to the brake pedal bracket.
3. Remove the brake pedal.
4. Remove the stoplight switch from the brake pedal.
5. Remove the speed control switch.
6. Remove the brake and clutch pedal bushings (2461) and brake master cylinder push rod spacer (2B129) from the panel.
7. Remove the brake pedal pad (2454), if required.

Installation

1. Install the brake pedal pad on the brake pedal, if required.
2. Install the stoplight switch on the brake pedal pin.
3. Install the speed control switch.
4. Install brake master cylinder push rod spacer on brake pedal.
5. Place brake and clutch pedal bushings inside brake pedal bracket and hold in place.
6. Position brake pedal and assembled parts up into the support bracket.
7. Push long bolt through the bracket and brake pedal. Install nut and tighten to 50-67 N·m (37-49 lb-ft).
8. Install the pin, brake master cylinder push rod spacer and self-locking pin to connect the brake pedal to the bellcrank rod.
9. Attach brake pedal to bellcrank rod as follows:
   a. Attach clevis, clevis pin and self-locking pin to brake pedal.
   b. Hold brake pedal against rubber stop.
   c. Make sure jam nut is loose.
   d. Insert brake rod into clevis until lower hole lines up with pin on bellcrank.
   e. Slide brake rod and bushing onto pin of bellcrank and assemble washer and self-locking pin.
   f. Tighten jam nut to 50-67 N·m (37-49 lb-ft).
10. Connect wires to stoplight switch. Check unit for correct operation.

Ford Motor Company

REMOVAL AND INSTALLATION (Continued)

Brake Pedal Installation, F-Super Duty Motorhome Chassis

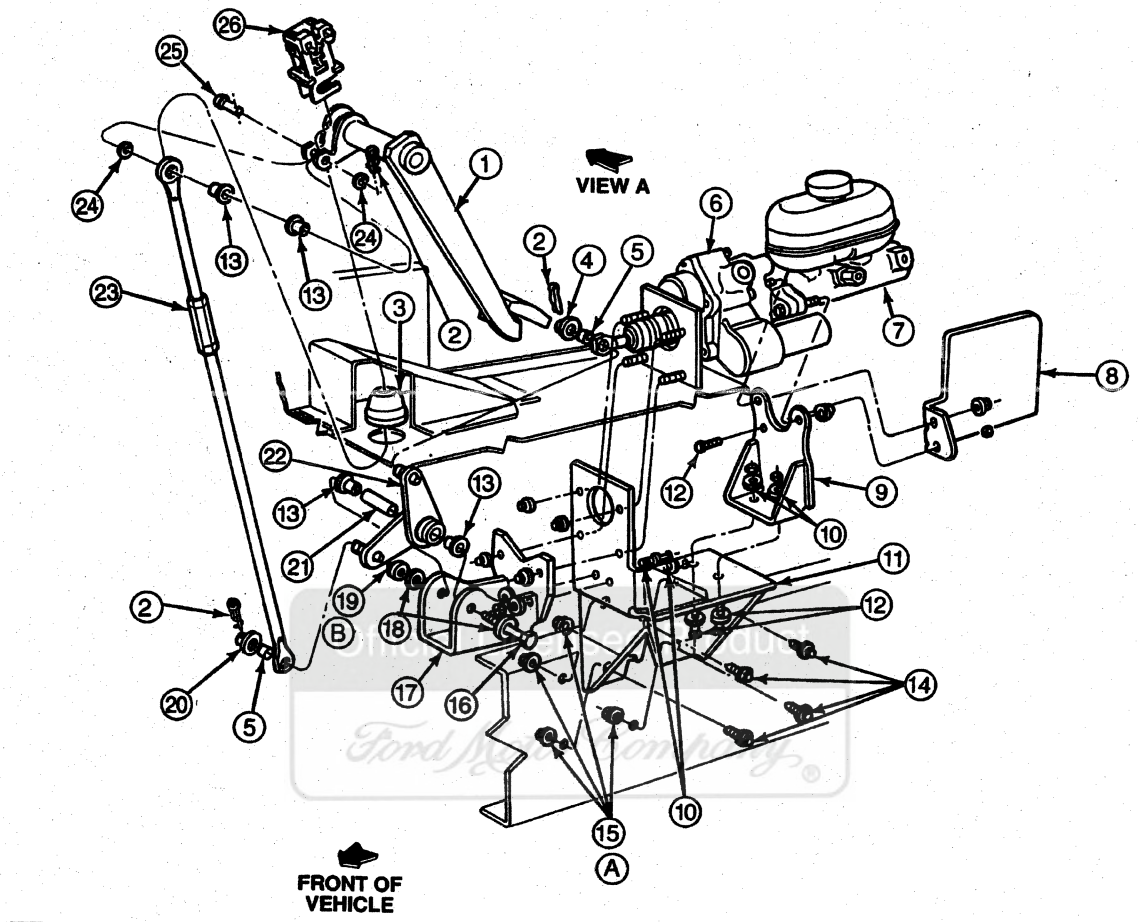

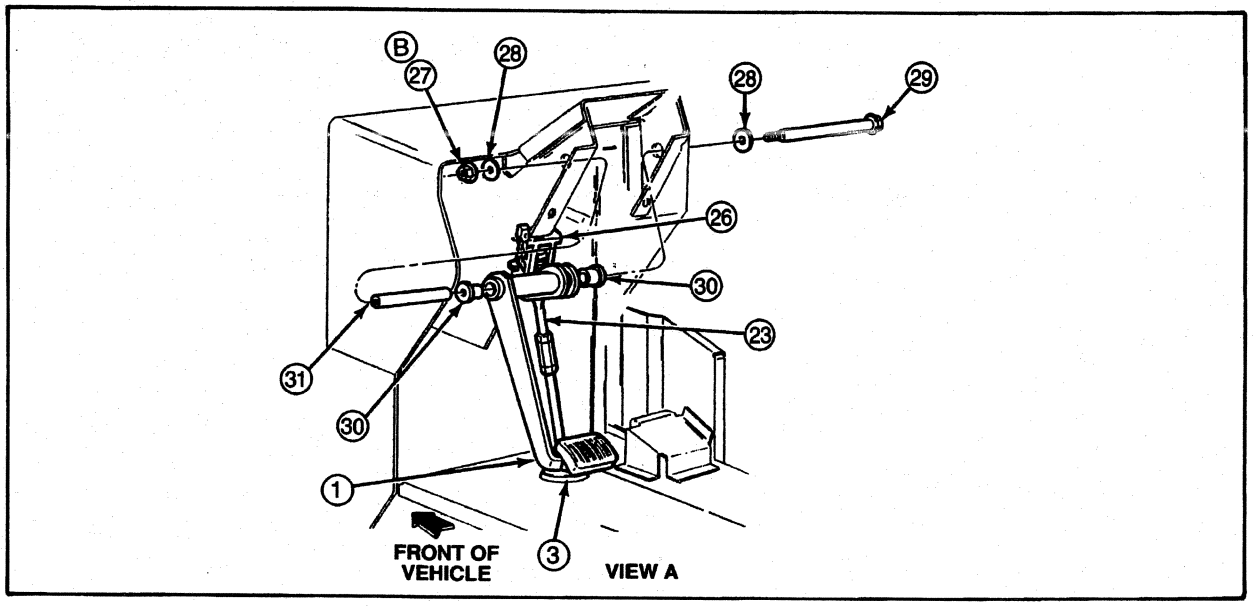

H5064-D

REMOVAL AND INSTALLATION (Continued)

Item	Part Number	Description
1	2455	Brake Pedal
2	380699	Self-Locking Pin
3	2N060	Boot
4	44880-S2	Washer
5	2474	Brake Master Cylinder Push Rod Bushing
6	2005	Power Brake Booster
7	2140	Brake Master Cylinder
8	2C022	Heat Shield
9	2031	Booster Front Mounting
10	N630088	Washer
11	2A248	Master Cylinder and Booster Bracket Holder
12	N601790	Bolt
13	2474	Brake Master Cylinder Push Rod Bushing
14	N802114-S2	Bolt
15	N800937-S2	Nut
16	389564-S190	Bolt
17	2B353	Bellcrank Bracket

(Continued)

Item	Part Number	Description
18	44878-S2	Washer
19	382400-S2	Nut
20	44880-S2	Washer
21	2B362	Bellcrank Spacer
22	2B327	Bellcrank
23	2A525	Bellcrank Rod
24	2B129	Brake Master Cylinder Push Rod Spacer
25	2462	Brake Pedal Pin
26	13480	Stoplight Switch
27	382400-S2	Nut
28	44878-S2	Washer
29	389863-S2	Bolt
30	2461	Brake and Clutch Pedal Bushing
31	7506	Clutch and Brake Pedal Pivot Shaft
A	—	Tighten to 88-104 N·m (65-77 Lb-Ft)
B	—	Tighten to 50-67 N·m (37-49 Lb-Ft)

Official Licensed Product Ford Motor Company

Brake Master Cylinder, F-250 Heavy Duty and F-350

WARNING: BRAKE FLUID CONTAINS POLYGLYCOL ETHERS AND POLYGLYCOLS. AVOID CONTACT WITH EYES. WASH HANDS THOROUGHLY AFTER HANDLING. IF BRAKE FLUID CONTACTS EYES, FLUSH EYES WITH RUNNING WATER FOR 15 MINUTES. GET MEDICAL ATTENTION IF IRRITATION PERSISTS. IF TAKEN INTERNALLY, DRINK WATER AND INDUCE VOMITING. GET MEDICAL ATTENTION IMMEDIATELY.

CAUTION: F-Super Duty vehicles are equipped with a hydraulic brake booster. Refer to Section 06-07C for hydraulic brake booster removal and installation procedures.

Removal

1. Disconnect the battery ground cable (14301).
2. With the engine turned off, push the brake pedal (2455) down to expel vacuum from the power brake booster (2005).
3. Disconnect fluid level indicator switch connector from the brake master cylinder (2140).
4. Disconnect the front brake tube (2264) and brake master cylinder connector tube from the brake master cylinder.
5. Remove the nuts retaining power brake booster to brake master cylinder. Remove the brake master cylinder from the power brake booster.

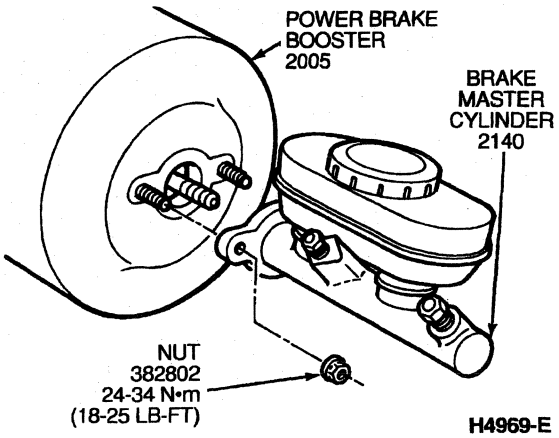

Installation

1. Before installing the brake master cylinder, check the distance from the outer end of the booster assembly push rod, to the front face of the power brake booster.

REMOVAL AND INSTALLATION (Continued)

2. Using a shop fabricated gauge, adjust the power brake booster push rod so that the end is 24.89-25.27 mm (0.980-0.995 inch) from the face of the power brake booster.

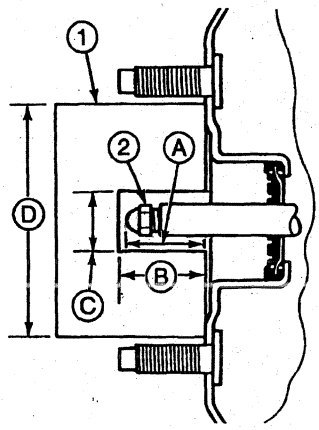

H1330-N

Item	Part Number	Description
1	—	Shop Fabricated Gauge
2	—	Adjustment Screw (Part of 2005)
A	—	24.89-25.27 mm (0.980-0.995 Inch)
B	—	25.27 mm (0.995 Inch)
C	—	19.05 mm (0.75 Inch)
D	—	74.61 mm (2.94 Inch)

3. Position the brake master cylinder assembly over the booster push rod and onto the two studs on the power brake booster.
4. Install the retaining nuts and tighten to 24-34 N·m (18-25 lb-ft).
5. Loosely connect the brake master cylinder outlet rear tube (2B253) and brake master cylinder connector tube (2A040) to the brake master cylinder.
6. Tighten the front master cylinder brake tube fitting to 22-28 N·m (16-21 lb-ft) and the rear master cylinder brake tube fitting to 15-20 N·m (11-15 lb-ft).
7. Connect fluid level indicator switch.
8. NOTE: When the battery (10655) has been disconnected and reconnected, some abnormal drive symptoms may occur while the powertrain control module (PCM)(12A650) relearns its adaptive strategy. The vehicle may need to be driven 16 km (10 miles) or more to relearn the strategy.

   Connect the battery ground cable.
9. Bleed the brake master cylinder. Refer to Service Procedures in this section.

Brake Master Cylinder Reservoir

Removal

WARNING: BRAKE FLUID CONTAINS POLYGLYCOL ETHERS AND POLYGLYCOLS. AVOID CONTACT WITH EYES. WASH HANDS THOROUGHLY AFTER HANDLING. IF BRAKE FLUID CONTACTS EYES, FLUSH EYES WITH RUNNING WATER FOR 15 MINUTES. GET MEDICAL ATTENTION IF IRRITATION PERSISTS. IF TAKEN INTERNALLY, DRINK WATER AND INDUCE VOMITING. GET MEDICAL ATTENTION IMMEDIATELY.

1. Disconnect the battery ground cable (14301).
2. Disconnect the brake warning lamp indicator wire from the plastic reservoir fluid level indicator socket. Using a suitable suction device, drain the brake fluid from the brake master cylinder (2140).

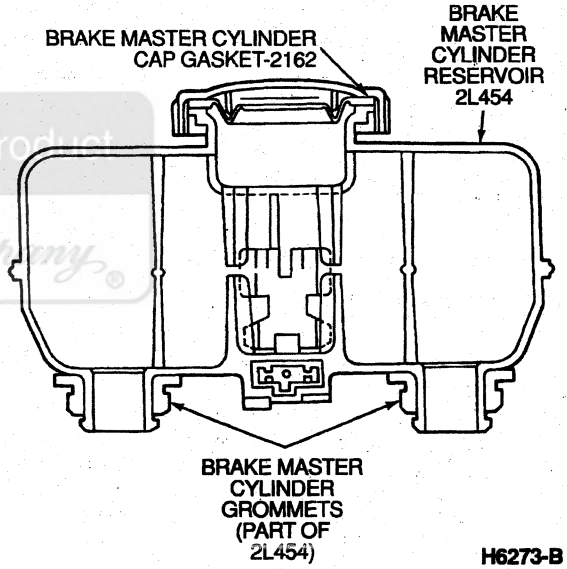

H6273-B

3. Using a large screwdriver, pry between the brake master cylinder reservoir and the brake master cylinder and remove the brake master cylinder reservoir.

Installation

1. NOTE: Whenever replacing the brake master cylinder reservoir, replace the grommets.

   Lubricate the two grommets included in Service Kit 2K478 with Ford High Performance DOT 3 Brake Fluid C6AZ-19542-AA or equivalent DOT 3 brake fluid meeting Ford specification ESA-M6C25-A. Insert the grommets into the brake master cylinder.
2. Press the brake master cylinder reservoir into the grommets with the fluid level indicator socket facing outboard. The brake master cylinder reservoir should snap in place.
3. Connect the brake warning lamp indicator wire to the fluid level indicator socket.

Licensed Product Motor Company

REMOVAL AND INSTALLATION (Continued)

4. NOTE: When the battery (10655) has been disconnected and reconnected, some abnormal drive symptoms may occur while the powertrain control module (PCM)(12A650) relearns its adaptive strategy. The vehicle may need to be driven 16 km (10 miles) or more to relearn the strategy.

   Connect the battery ground cable.

5. Fill the brake master cylinder reservoir with Ford High Performance DOT 3 Brake Fluid C6AZ-19542-AA or equivalent DOT 3 fluid meeting Ford specification ESA-M6C25-A. Bleed the system. Refer to Service Procedures in this section.
6. After bleeding, fill brake master cylinder reservoir to 3.17 mm (1/8 inch) from the top with Ford High Performance DOT 3 Brake Fluid C6AZ-19542-AA or equivalent DOT 3 fluid meeting Ford specification ESA-M6C25-A.

Brake Master Cylinder Fluid Level Sensor

The brake master cylinder sensor is part of the brake master cylinder reservoir and is not separately serviceable.

Brake Load Sensor Proportioning Valve, F-Super Duty Chassis Cab

CAUTION: If the linkage is disconnected from the brake load sensor proportioning valve (2B547), the proper indexing will be lost and a new brake load sensor proportioning valve must be installed. The new brake load sensor proportioning valve will have the shaft preset and secured internally. If the valve shaft of the valve turns freely, do not use. Do not service or disassemble the brake load sensor proportioning valve. It must be replaced as a complete assembly. If the linkage is damaged or broken and requires replacement, a new brake load sensor proportioning valve must also be installed.

NOTE: If necessary, when servicing rear suspension components, fuel tank (9002), etc., remove the two nuts attaching the sensing valve linkage to the rear axle cover plate. This will eliminate the need to replace the brake load sensor proportioning valve.

NOTE: Any change to the vehicle rear suspension which alters curb ride height or spring deflection rate (increased capacity rear springs (5560), addition of spacers, etc.) may change the function of the brake load sensor proportioning valve and alter the system braking performance.

Removal

1. With the rear wheels (1007) on the ground, lift the frame (5005) to obtain a 168-mm (6.6-inch) clearance between the bottom edge of the rear axle bumper (4730) and the top of the rear axle housing (4010) (both sides). The suspension is now in the correct position for installing the pre-indexed brake load sensor proportioning valve.

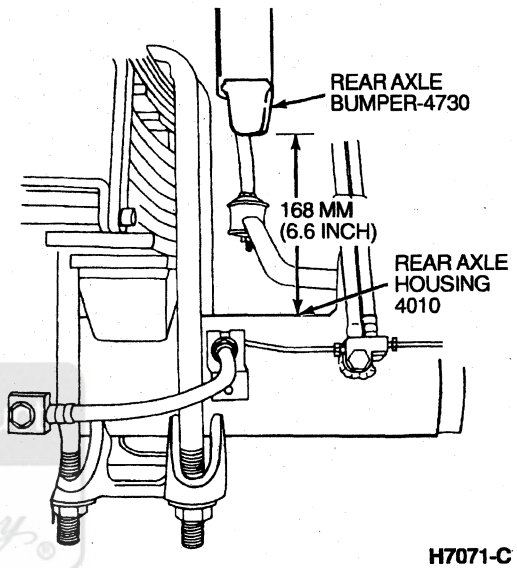

2. Remove the nut holding the linkage arm to the brake load sensor proportioning valve and disconnect the linkage arm.
3. Remove the flow bolt holding the rear brake hose (2282) to the brake load sensor proportioning valve.
4. Disconnect the brake tube from the brake load sensor proportioning valve.
5. Remove the two bolts securing the brake load sensor proportioning valve to mounting bracket, remove the brake load sensor proportioning valve.

Installation

1. Place the new brake load sensor proportioning valve on its mounting bracket. Install the two mounting bolts and tighten to 30-40 N·m (22-30 lb-ft).
2. Install the rear brake hose using new copper washers. Tighten the flow bolt to 23-34 N·m (17-25 lb-ft).
3. Install the brake tube to the lower port on the brake load sensor proportioning valve and tighten securely.
4. Position the linkage arm on the brake load sensor proportioning valve and tighten the retaining nut to 15-20 N·m (11-15 lb-ft).
5. Bleed the brakes. Refer to Service Procedures in this section. Check for proper brake operation.

Official Licensed Product Ford Motor Company

REMOVAL AND INSTALLATION (Continued)

Brake Load Sensor Proportioning Valve, F-Super Duty Chassis Cab

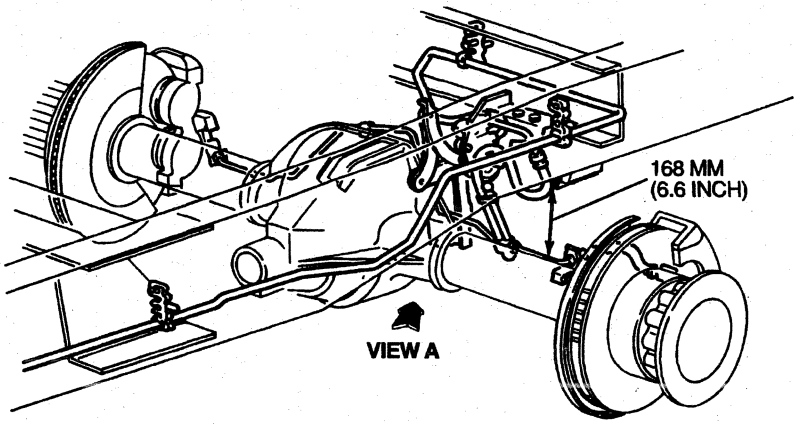

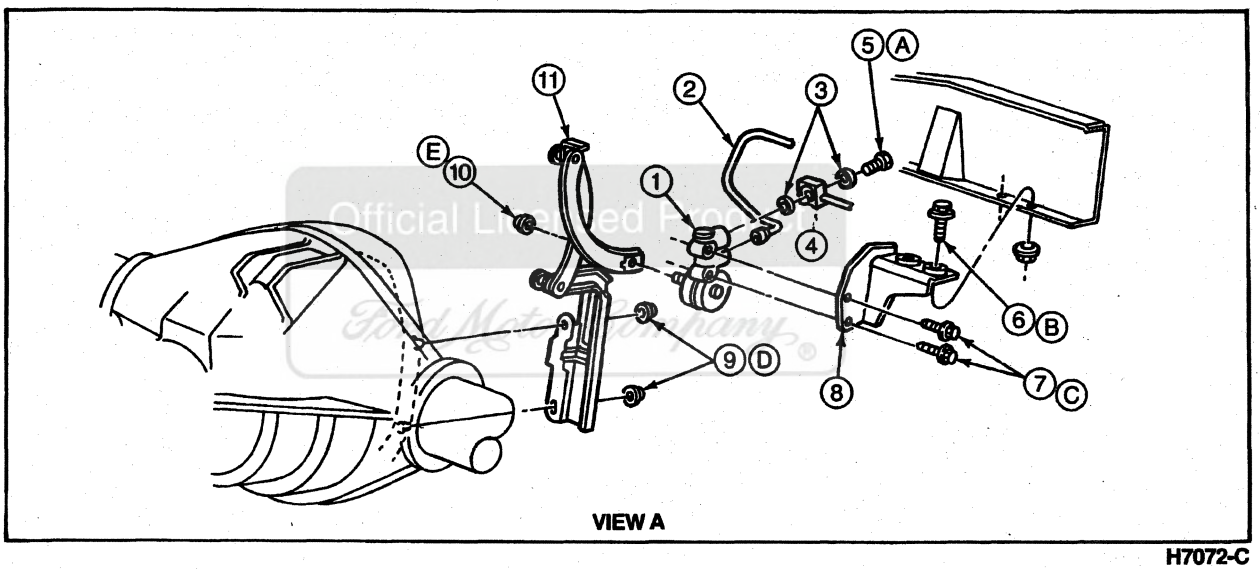

H7072-C

Item	Part Number	Description
1	2B547	Brake Load Sensor Proportioning Valve
2	2265	Brake Tube
3	388949-S	Copper Washer
4	2282	Rear Brake Hose
5	385116-S2	Bolt
6	N605789	Bolt
7	56522	Bolt
8	2B256	Bracket
9	379930	Nut

(Continued)

Item	Part Number	Description
10	379930	Nut
11	2C193	Linkage
A	—	Tighten to 23-34 N·m (17-25 Lb-Ft)
B	—	Tighten to 26-40 N·m (19-30 Lb-Ft)
C	—	Tighten to 30-40 N·m (22-30 Lb-Ft)
D	—	Tighten to 34-46 N·m (25-34 Lb-Ft)
E	—	Tighten to 15-20 N·m (11-15 Lb-Ft)

REMOVAL AND INSTALLATION (Continued)

Fluid Control Valve, Brake Master Cylinder

Removal

1. Disconnect the brake tube from the outlet port at the rear of the brake master cylinder (2140).
2. Unscrew the brake master cylinder fluid control valve and remove it from the brake master cylinder.

Installation

1. Follow removal procedure in reverse order.
2. Tighten the brake tube-to-brake master cylinder fitting to 15-20 N·m (11-15 lb-ft).

Stoplight Switch

Refer to Section 17-01.

Brake Hose, Front

Removal

1. Raise and support the vehicle.
2. At the frame mounting point of the LH front brake hose (2078), disconnect the two front brake tube fittings.
3. At the frame mounting point, remove the front brake hose mounting clip.
4. At the disc brake caliper (2B120), remove the front disc brake caliper flow bolt. Discard the copper washers.
5. Remove the front brake hose bolt securing the front brake hose to the disc brake caliper.
6. Remove the front brake hose from the vehicle.

Installation

1. Follow removal procedure in reverse order.
2. Use new copper washers and tighten the front disc brake caliper flow bolt to 30-40 N·m (22-30 lb-ft).
3. Tighten the front brake hose bolt to 3-5 N·m (27-44 lb-in).
4. Tighten the two front brake tube fittings to 15-20 N·m (11-15 lb-ft).

Brake Line Replacement

Refer to Hydraulic Line Repair in the Service Procedures portion of this section.

DISASSEMBLY AND ASSEMBLY

Brake Master Cylinder

WARNING: BRAKE FLUID CONTAINS POLYGLYCOL ETHERS AND POLYGLYCOLS. AVOID CONTACT WITH EYES. WASH HANDS THOROUGHLY AFTER HANDLING. IF BRAKE FLUID CONTACTS EYES, FLUSH EYES WITH RUNNING WATER FOR 15 MINUTES. GET MEDICAL ATTENTION IF IRRITATION PERSISTS. IF TAKEN INTERNALLY, DRINK WATER AND INDUCE VOMITING. GET MEDICAL ATTENTION IMMEDIATELY.

Disassembly

1. Remove the brake master cylinder (2140) from the vehicle.
2. Clean the outside of the brake master cylinder. Remove the brake master cylinder filler cap (2162) and gasket. Drain and discard any brake fluid that remains in the brake master cylinder.
3. If so equipped, remove the brake master cylinder fluid control valve from the brake master cylinder.
4. Remove stop-bolt from the bottom of the brake master cylinder.

Brake Master Cylinder

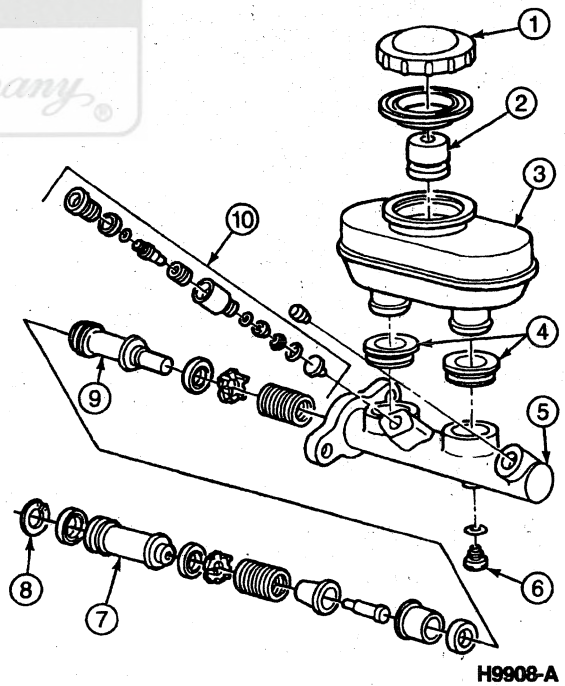

H9908-A

Item	Part Number	Description
1	2162	Brake Master Cylinder Filler Cap
2	—	Float (Part of 2L454)
3	2L454	Brake Master Cylinder Reservoir

(Continued)

DISASSEMBLY AND ASSEMBLY (Continued)

Item	Part Number	Description
4	—	Brake Master Cylinder Grommets (Part of 2L454)
5	2140	Brake Master Cylinder
6	—	Stop Bolt (Part of 2140)
7	—	Primary Piston (Part of 2004)
8	—	Snap Ring (Part of 2004)
9	—	Secondary Piston (Part of 2004)
10	2C161	Brake Master Cylinder Fluid Control Valve

5. Depress the primary piston and remove snap ring from retaining groove at the rear of the brake master cylinder bore.

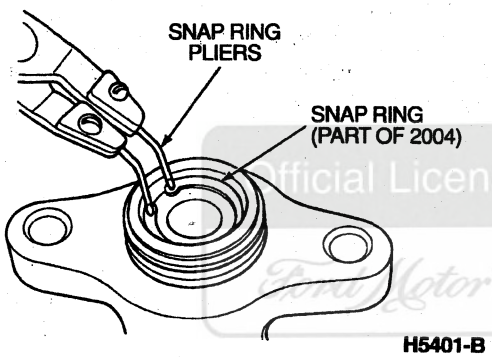

6. Remove primary piston assembly from the brake master cylinder bore. Discard assembly.
7. Remove the secondary piston assembly by directing compressed air into the outlet port at the blind end of the bore while plugging the other outlet port. Discard assembly.
8. Inspect the brake master cylinder bore for signs of etching, pitting, scoring or other damage.
   a. If bore is damaged, discard and replace with new brake master cylinder. Do not attempt to hone bore.
   b. If bore is not damaged, rebuild brake master cylinder using the proper repair kit and the procedure below.

Assembly

1. Clean the brake master cylinder body with clean isopropyl alcohol to remove any contamination.
2. Dip the repair kit piston assemblies in clean Ford High Performance DOT 3 Brake Fluid C6AZ-19542-AA or equivalent DOT 3 fluid meeting Ford specification ESA-M6C25-A to lubricate seals.
3. Carefully insert the complete secondary piston assembly in the brake master cylinder bore.
4. Carefully insert the primary piston assembly in the brake master cylinder bore.
5. Depress the primary piston and install the snap ring in the groove in the brake master cylinder bore.
6. Install the stop bolt into the bottom of the brake master cylinder.
7. If so equipped, install the brake master cylinder fluid control valve into the brake master cylinder.
8. Install the brake master cylinder filler cap on the brake master cylinder reservoir.
9. Install the brake master cylinder on vehicle.
10. Bleed the brakes. Refer to Service Procedures in this section. Check for proper brake operation.

SERVICE PROCEDURES

Hydraulic System Bleeding

WARNING: BRAKE FLUID CONTAINS POLYGLYCOL ETHERS AND POLYGLYCOLS. AVOID CONTACT WITH EYES. WASH HANDS THOROUGHLY AFTER HANDLING. IF BRAKE FLUID CONTACTS EYES, FLUSH EYES WITH RUNNING WATER FOR 15 MINUTES. GET MEDICAL ATTENTION IF IRRITATION PERSISTS. IF TAKEN INTERNALLY, DRINK WATER AND INDUCE VOMITING. GET MEDICAL ATTENTION IMMEDIATELY.

NOTE: When any part of the hydraulic system has been disconnected for service or replacement, air may get into the lines and cause spongy brake pedal action. This requires the bleeding of the hydraulic system after it has been properly connected so all air is expelled from the brake cylinders and lines. The hydraulic system can be bled manually or with pressure bleeding equipment Rotunda Brake Bleeder 104-00064 or equivalent.

Ford High Performance DOT 3 Brake Fluid C6AZ-19542-AA or equivalent DOT 3 fluid meeting Ford specification ESA-M6C25-A must be used in the brake system.

Never use brake fluid that has been drained from the hydraulic system or that has been standing in an open container for an extended period of time.

Brake Master Cylinder Bleeding, Bench

WARNING: BRAKE FLUID CONTAINS POLYGLYCOL ETHERS AND POLYGLYCOLS. AVOID CONTACT WITH EYES. WASH HANDS THOROUGHLY AFTER HANDLING. IF BRAKE FLUID CONTACTS EYES, FLUSH EYES WITH RUNNING WATER FOR 15 MINUTES. GET MEDICAL ATTENTION IF IRRITATION PERSISTS. IF TAKEN INTERNALLY, DRINK WATER AND INDUCE VOMITING. GET MEDICAL ATTENTION IMMEDIATELY.

1. Support the brake master cylinder body in a vise, and fill both fluid brake master cylinder reservoirs with Ford High Performance DOT 3 Brake Fluid C6AZ-19542-AA or equivalent DOT 3 fluid meeting Ford specification ESA-M6C25-A.

SERVICE PROCEDURES (Continued)

2. Install plugs in the front and rear brake outlet ports. Bleed the front brake system first.
3. Loosen the plug in the front brake outlet port. Depress the primary piston slowly to force the air out of the brake master cylinder (2140).
4. Tighten plug while piston is depressed or air will enter the brake master cylinder.
5. Repeat this procedure until air ceases to exit at the outlet port.
6. Repeat Steps 3, 4 and 5, for the rear brake outlet port with the front brake outlet plugged.
7. Tighten the plugs and try to depress the piston. The piston will not depress if all air bubbles are out of the brake system.
8. Install the brake master cylinder filler cap (2162).
9. Install the brake master cylinder in the vehicle and perform Pressure Bleeding procedure in this section.

Brake Master Cylinder Bleeding, On-Vehicle

When a brake master cylinder has been installed, or the brake system emptied or partially emptied, fluid may not flow from the wheel cylinder bleeder screws during normal bleeding. It may be necessary to prime the brake master cylinder using the following procedure.

1. Use a tubing wrench to remove the front brake tube (2264) and the brake master cylinder outlet rear tube from the brake master cylinder.
2. Install short brake tubes in the brake master cylinder and position them so that they curve into the brake master cylinder reservoir, and the ends of the tubes are submerged in brake fluid.
3. Fill the brake master cylinder reservoir with new Ford High Performance DOT 3 Brake Fluid C6AZ-19542-AA or equivalent DOT 3 fluid meeting Ford specification ESA-M6C25-A.
4. **CAUTION: Brake fluid is harmful to painted and plastic surfaces. If brake fluid is spilled onto a painted or plastic surface, immediately wash it with water.**

   Have an assistant pump the brakes until clear, bubble-free fluid flows from both brake tubes.
5. Remove the short brake tubes and reinstall the front brake tube and brake master cylinder outlet rear tube (2B253) on the brake master cylinder.
6. Bleed each brake tube at the brake master cylinder using the following procedure:
   a. Have an assistant pump the brake pedal (2455) 10 times and then hold firm pressure on the brake pedal.
   b. Loosen the rearmost brake tube fittings with a tubing wrench until a stream of brake fluid comes out. Have an assistant maintain pressure on the brake pedal until the brake tube fitting is tightened again.
   c. Repeat this operation until clear, bubble-free fluid comes out from around the tube fitting.

      Refill the brake master cylinder reservoir as necessary.
   d. Repeat this bleeding operation at the front brake tube fittings.

System Gravity Bleeding

If any of the brake tubes, disc brake calipers (2B120), or rear wheel cylinders (2261) have been removed, it may be helpful to prime the system by gravity bleeding. This should be done after the brake master cylinder is primed and bled.

1. Fill the brake master cylinder with new Ford High Performance Brake Fluid C6AZ-19542-AA or equivalent DOT 3 fluid meeting Ford specification ESA-M6C25-A.
2. Loosen both of the wheel cylinder bleeder screws (2208) and leave them open until clear brake fluid flows. Be sure to check the brake master cylinder reservoir (2K478) fluid level often and do not let it run dry.
3. Tighten the wheel cylinder bleeder screws to 7-9 N·m (62-80 lb-in).
4. One at a time, loosen the caliper bleeder screws. Leave the bleeder screws open until clear fluid flows. Check the fluid level often in the brake master cylinder reservoir and do not let it run dry.
5. Tighten the caliper bleeder screws to 17-23 N·m (13-17 lb-ft).
6. After the brake system has been primed, bleed the brake system at each wheel (1007).

Ford Motor Company Licensed Product

SERVICE PROCEDURES (Continued)

Manual Bleeding

Dual Brake System Hydraulic Brake Master Cylinder

WARNING: BRAKE FLUID CONTAINS POLYGLYCOL ETHERS AND POLYGLYCOLS. AVOID CONTACT WITH EYES. WASH HANDS THOROUGHLY AFTER HANDLING. IF BRAKE FLUID CONTACTS EYES, FLUSH WITH RUNNING WATER FOR 15 MINUTES. GET MEDICAL ATTENTION IF IRRITATION PERSISTS. IF TAKEN INTERNALLY, DRINK WATER AND INDUCE VOMITING. GET MEDICAL ATTENTION IMMEDIATELY.

CAUTION: DO NOT allow the brake master cylinder reservoir to run dry during the bleeding operation. Keep the brake master cylinder reservoir filled with the specified brake fluid. Never reuse the brake fluid that has been drained from the hydraulic system.

NOTE: Bleed the primary and secondary hydraulic brake systems separately.

- Bleed one brake cylinder at a time.
- On F-250 Heavy Duty and F-350 vehicles, start the bleeding at the RH rear wheel cylinder and then at the LH rear wheel cylinder. After completing, proceed to the bleeder valve on the anti-lock brake control module (2B373). Then proceed to bleed the front brakes, starting with the right front brake, and finish bleeding on the left front brake.
- On F-Super Duty vehicles, start the bleeding at the right rear brake, then the left rear brake. After completing, proceed to bleed the right front brake and then the left front brake.
- Keep the brake master cylinder reservoir filled with the specified Ford High Performance DOT 3 Brake Fluid C6AZ-19542-AA or equivalent DOT 3 fluid meeting Ford specification ESA-M6C25-A. Never use brake fluid that has been drained from the system.

If there is reason to believe air has entered the brake master cylinder, bleed as follows:

1. On the brake master cylinder reservoir, loosen the master cylinder-to-hydraulic line fittings.
2. Wrap a shop cloth around the tubing below the fitting to absorb escaping brake fluid.
3. Push the brake pedal down slowly to the floor of the cab. This will force air trapped in the brake master cylinder to escape at the fitting.
4. Hold the brake pedal down and tighten the fitting. Release the brake pedal. Do not release the brake pedal until the fitting is tightened or air will re-enter the brake master cylinder.
5. Repeat this procedure until air ceases to escape at the fitting.
6. Place a box wrench on the RH wheel cylinder bleeder screw. Attach a rubber drain tube to the wheel cylinder bleeder screw making sure the end of the tube fits snugly around the wheel cylinder bleeder screw.
7. Submerge the free end of the tube in a container partially filled with clean brake fluid. Loosen the wheel cylinder bleeder screw approximately three-quarters of a turn.
8. Slowly push the brake pedal all the way down. Close the wheel cylinder bleeder screw, and return the brake pedal to the fully-released position. Repeat this operation until air bubbles no longer appear at the submerged end of the bleeder tube.
9. When the fluid is completely free of air bubbles, close the wheel cylinder bleeder screw and remove the bleeder tube.
10. Repeat this procedure at the LH rear wheel cylinder. Refill the brake master cylinder reservoir as needed.
11. **CAUTION: Do not reuse brake fluid that has been bled from the system.**

    Place a box wrench on the bleeder fitting on the anti-lock brake control module. Attach a rubber drain tube to the bleeder fitting making sure the end of the tube fits snugly around the bleeder fitting.
12. Submerge the free end of the tube in a container partially filled with clean brake fluid. Loosen the bleeder fitting approximately three-quarters of a turn.

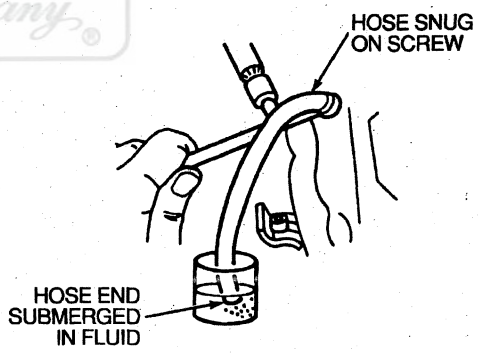

REAR WHEEL CYLINDER BLEEDING

H9909-A

13. Slowly press the brake pedal all the way down. Close the bleeder fitting, and return the brake pedal to the fully released position. Repeat this operation until air bubbles no longer appear at the submerged end of the bleeder tube.
14. When the fluid is completely free of air bubbles, close the bleeder fitting and remove the bleeder tube.
15. Bleed the front brakes starting with the right front brake and then the left front brake as described in Steps 6-10 of this procedure.
16. When the bleeding operation is complete, fill the brake master cylinder reservoir to the maximum level line.

SERVICE PROCEDURES (Continued)

Pressure Bleeding

WARNING: BRAKE FLUID CONTAINS POLYGLYCOL ETHERS AND POLYGLYCOLS. AVOID CONTACT WITH EYES. WASH HANDS THOROUGHLY AFTER HANDLING. IF BRAKE FLUID CONTACTS EYES, FLUSH WITH RUNNING WATER FOR 15 MINUTES. GET MEDICAL ATTENTION IF IRRITATION PERSISTS. IF TAKEN INTERNALLY, DRINK WATER AND INDUCE VOMITING. GET MEDICAL ATTENTION IMMEDIATELY.

NOTE: Bleed the longest lines first. Be sure the bleeder tank contains enough specified brake fluid, Ford High Performance DOT 3 Brake Fluid C6AZ-19542-AA or equivalent DOT 3 fluid meeting Ford specification ESA-M6C25-A to complete the bleeding operation. Charge the tank with approximately 69-206 kPa (10-30 psi) of air pressure. Never exceed 345 kPa (50 psi) of pressure. Never re-use brake fluid that has been drained from the hydraulic system.

1. Clean all dirt from the brake master cylinder filler cap.
2. Remove brake master cylinder filler cap and fill the brake master cylinder reservoir with the specified brake fluid.
3. NOTE: Master cylinder pressure bleeder adapter tools are available from various manufacturers of pressure bleeding equipment. Follow the instructions of the manufacturer when installing the adapter.

   Install pressure bleeder adapter Rotunda Brake Bleeder 104-00064 or equivalent to the brake master cylinder reservoir, and attach bleeder tank hose to fitting on adapter.
4. Place a 3/8-inch box wrench on RH wheel cylinder bleeder screw. Attach a bleeder tube snugly around wheel cylinder bleeder screw.
5. Open valve on bleeder tank to admit pressurized brake fluid to the brake master cylinder reservoir.
6. Submerge free end of tube in a partially filled container with clean brake fluid and loosen wheel cylinder bleeder screw.

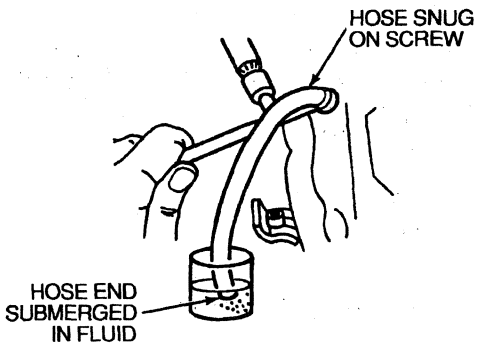

REAR WHEEL CYLINDER BLEEDING

H9909-A

7. When air bubbles no longer appear in the fluid at the submerged end of the bleeder tube, close the wheel cylinder bleeder screw and remove tube.
8. Continue bleeding rest of the system going in order from the LH rear wheel cylinder (2262), then proceed to the front RH disc brake caliper, ending with front LH front disc brake caliper (2B121).
9. When the bleeding operation is completed, close bleeder tank valve and remove the tank hose from adapter fitting.
10. Remove the pressure bleeder adapter tool.
11. Fill brake master cylinder reservoir to MAX fill level line indicated on reservoir.
12. Install brake master cylinder filler cap.

Anti-Lock Brake System Bleeding

SPECIAL SERVICE TOOL(S) REQUIRED

Description	Tool Number
Anti-Lock Brake Adapter (Bleeder Box)	T90P-50-ALA
Anti-Lock Brake Adapter (Jumper Cable)	T93T-50-ALA

1. **CAUTION: Perform this procedure only if the hydraulic control unit (HCU) has been replaced. Follow conventional bleed procedures if the HCU is not being replaced.**

   Perform Pressure Bleeding procedure in this section.
2. Connect Anti-Lock Brake Adapter T90P-50-ALA (bleeder box) and Anti-Lock Brake Adapter T93T-50-ALA (jumper cable).
3. Press down on the brake pedal and depress the VALVES button on the bleeder box (brake pedal will fall).
4. Release the VALVES button and release the brake pedal.
5. Repeat Steps 3 and 4 once more.
6. Depress the MOTOR START button and let the pump motor run for one minute.

Official Licensed Product

SERVICE PROCEDURES (Continued)

7. Perform Pressure Bleeding procedure in this section.

ANTI-LOCK BRAKE ADAPTER CONTROLS

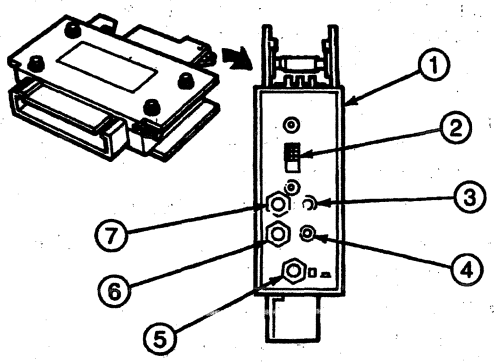

H8693-B

Item	Part Number	Description
1	T90P-50-ALA	Anti-Lock Brake Adapter (Part of T90P-50-ALA)
2	—	Bleed/Harness Selector (Part of T90P-50-ALA)
3	—	Green MOTOR ON Lamp (Part of T90P-50-ALA)
4	—	Red MOTOR OFF Lamp (Part of T90P-50-ALA)
5	—	Valve Button (Part of T90P-50-ALA)
6	—	Abort Button (Part of T90P-50-ALA)
7	—	Motor Start Button (Part of T90P-50-ALA)

CLEANING AND INSPECTION

Brake Master Cylinder

Check the brake tubes and brake master cylinder (2140) mounting. The brake tubes and brake tube nuts must be tight without any signs of leakage. Tighten the brake tube nuts (2133) at the brake master cylinder to 22-28 N·m (16-21 lb-ft).

The following conditions are considered normal and are not indications that the brake master cylinder is in need of service:

- Low brake fluid level detected without signs of leakage. This condition is caused by displacement of brake fluid from the brake master cylinder reservoir into the disc brake calipers (2B120) or the rear wheel cylinders (2261) to compensate for normal brake wear. Add brake fluid as needed.
- A momentary or slight squirt of brake fluid from the brake master cylinder reservoir upon application of the brake pedal (2455). This condition is caused by brake fluid displacement through the brake master cylinder reservoir compensating port as the brake master cylinder pistons move forward in the bore when the brakes are applied.
- Slight turbulence in the brake master cylinder reservoir fluid when the brake pedal is released. Turbulence occurs as brake fluid returns to the brake master cylinder after releasing the brakes.
- A trace of brake fluid found on the outside of the power brake booster (2005) below the brake master cylinder mounting flange. This condition results from the lubricating action of the brake master cylinder wiping seal.

Brake Lines and Hose

Inspect the brake tubes and hoses under the vehicle for damage and proper routing. Check the brake hoses routed to the disc brake calipers (2B120) or to the rear wheel cylinders (2261) for any signs of damage. The tube and hose fittings must be tight without signs of leakage.

Brake Fluid Leakage

The wet appearance of the outer cover of rubber brake hoses is called "sweating." This is a normal condition for neoprene rayon braid hose. The sweating condition is not evidence of a brake fluid leak and will not result in a loss of pressure in the system.

Replace a flexible brake hose if it shows signs of softening, cracking or other damage.

When installing a new brake hose, position the hose to avoid contact with other vehicle parts.

If signs of leakage are not present but the brake fluid level is low, it is possible that evidence of brake fluid leakage may have been washed off by rain or snow because brake fluid is water soluble. To determine if a leak exists, proceed as follows:

a. Fill the system.
b. Bleed the system.
c. Apply the brakes several times.
d. Examine the system to verify that the brake fluid level is actually dropping.
e. Locate and correct the external leak.

Ford Motor Company Licensed Product

CLEANING AND INSPECTION (Continued)

Internal and external leaks are two problems that can affect a brake hydraulic system. The hydraulic brake system will not cause the vehicle to do any of the following:

- vibrate
- pull
- grab
- squeal
- allow the brake pedal (2455) to pulse

In most cases the hydraulic system will not cause the brakes to drag. The sources of these problems are found elsewhere in the brake system, but it is a good policy to first check the entire hydraulic system for leaks before continuing to diagnose any other brake problems.

ADJUSTMENTS

Brake Pedal Linkage, F-Super Duty Motorhome Chassis

1. Attach brake rod, brake pedal pin and self locking pin to brake pedal (2455).
2. Hold brake pedal against rubber stop.
3. Make sure jam nut is loose.
4. Turn brake rod into clevis until lower hole lines up with pin on bellcrank.
5. Slide brake rod and bushing onto pin of bellcrank and attach washer and self locking pin.
6. Tighten jam nut to 50-67 N·m (37-49 lb-ft).

Brake Pedal

Official Licensed Product
Ford Motor Company

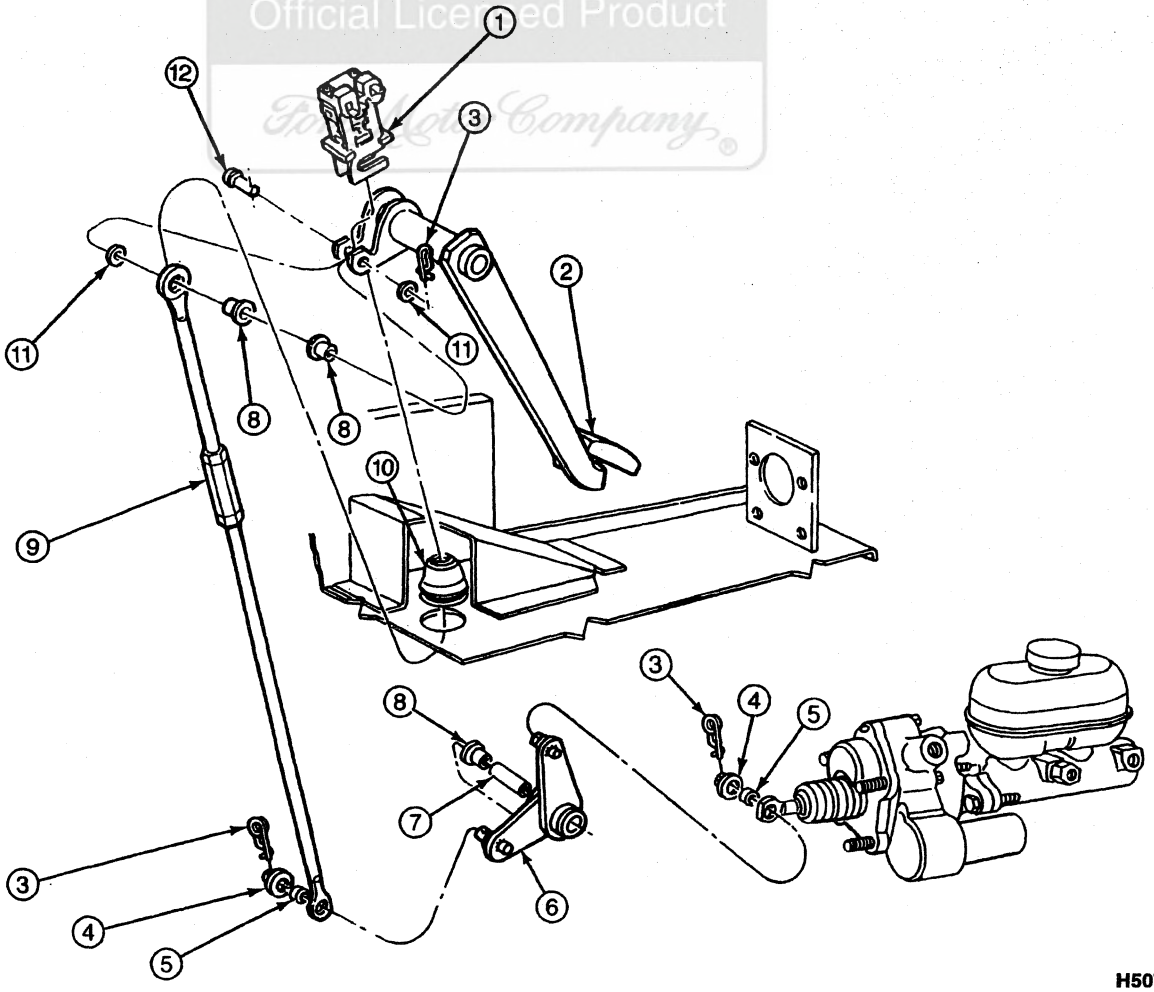

ADJUSTMENTS (Continued)

Item	Part Number	Description
1	13480	Stoplight Switch
2	2455	Brake Pedal
3	380699-S100	Self-Locking Pin
4	44880-S2	Flatwasher, 9/16-Inch
5	2474	Brake Master Cylinder Push Rod Bushing
6	2B327	Bellcrank

(Continued)

Item	Part Number	Description
7	2B362	Bellcrank Spacer
8	2474	Brake Master Cylinder Push Rod Bushing
9	2A525	Brake Rod
10	2N060	Brake Rod Seal Boot
11	2B129	Brake Master Cylinder Push Rod Spacer
12	2462	Brake Pedal Pin

Brake Booster to Master Cylinder Push Rod

For adjustment of the power brake booster to brake master cylinder push rod, refer to Brake Master Cylinder, F-250 Heavy Duty and F-350, in the Removal and Installation portion of this section.

Brake Load Sensor Proportioning Valve

Inspect the vehicle to determine if the rear suspension has been modified. Refer to Section 04-02. If the rear suspension has been modified, the ride height and spring rate have been altered and the brake load sensor proportioning valve cannot work properly.

Unmodified Suspension

If there is a customer concern regarding premature front disc brake pad wear that cannot be attributed to other causes, replace the brake load sensor proportioning valve (2B547) and linkage. Refer to the procedure in this section.

Modified Suspension

If a brake load sensor proportioning valve is present and there is a customer concern regarding premature front disc brake pad wear that cannot be attributed to other causes, perform the following procedure:

1. Raise and support the vehicle.
2. Remove the brake load sensor proportioning valve shaft nut and disconnect the linkage from the shaft.

Ford Motor Company Licensed Product

ADJUSTMENTS (Continued)

Brake Load Sensor Proportioning Valve and Linkage

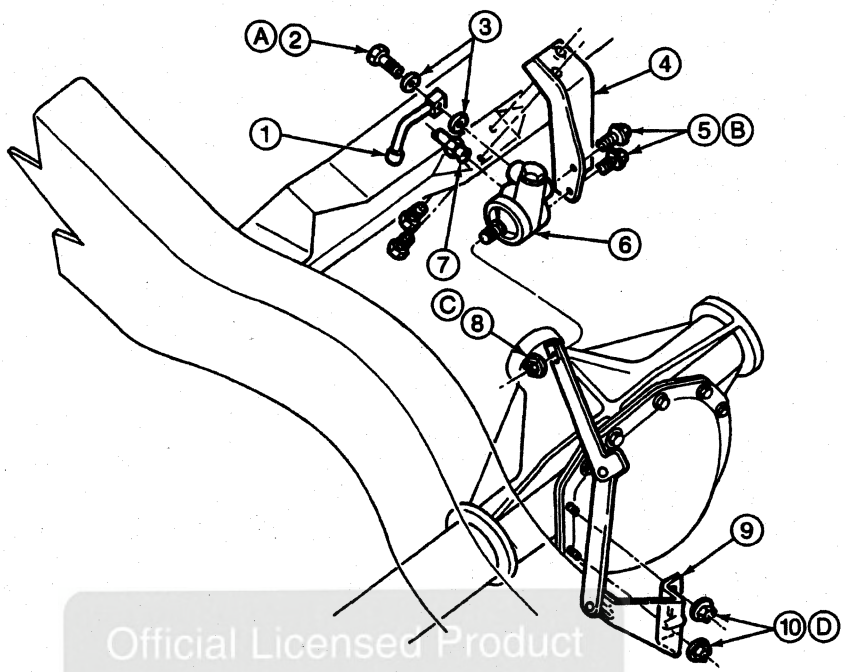

H9910-A

Official Licensed Product
Ford Motor Company

Item	Part Number	Description
1	2282	Rear Brake Hose
2	385116-S2	Flow Bolt
3	388949-S	Copper Washers
4	2B526	Brake Load Sensor Proportioning Valve Bracket
5	56522-S100	Brake Load Sensor Proportioning Valve Bolts
6	2B547	Brake Load Sensor Proportioning Valve
7	2265	Brake Line (from Master Cylinder)
8	379930-S2	Brake Load Sensor Proportioning Valve Nut

Item	Part Number	Description
9	2C193	Valve Linkage
10	379930-S2	Valve Linkage-to-Differential Housing Nuts
A	—	Tighten to 23-34 N·m (17-25 Lb-Ft)
B	—	Tighten to 30-40 N·m (22-30 Lb-Ft)
C	—	Tighten to 15-20 N·m (11-15 Lb-Ft)
D	—	Tighten to 34-46 N·m (25-34 Lb-Ft)

(Continued)

3. Remove the two valve linkage-to-differential housing nuts and the valve linkage.
4. Return the linkage to the customer.

5. Install the valve linkage-to-differential housing nuts and tighten to 34-46 N·m (25-34 lb-ft).

ADJUSTMENTS (Continued)

6. Rotate the brake load sensor proportioning valve shaft one full turn in either direction and position the shaft so that the flat is horizontal and facing down.

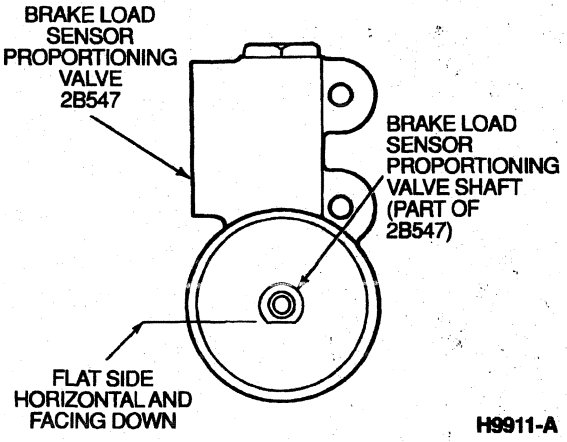

H9911-A

7. Rotate the brake load sensor proportioning valve shaft counterclockwise 90 degrees so that the flat is vertical.

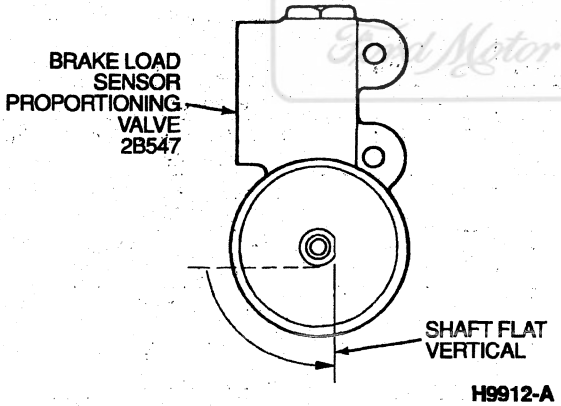

H9912-A

8. Install the brake load sensor proportioning valve shaft positioner so that the flat on the shaft is still vertical and the positioner is fully seated on the valve body.

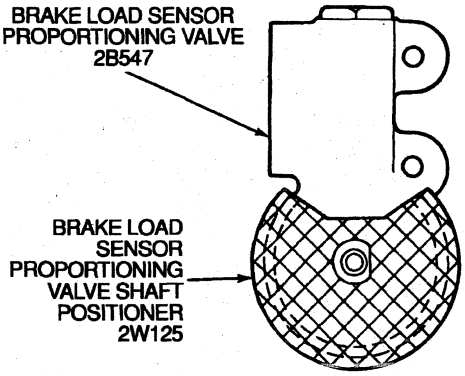

H9913-A

9. Install the brake load sensor proportioning valve shaft nut and tighten to 15-20 N·m (11-15 lb-ft).
10. Install an "Authorized Modification" decal on the brake booster listing the modification as follows: HSPV REAR BRAKE OPERATION MODIFIED.
11. Obtain an Authorized Modifications Decal and list the date, dealer number, and a summary of the alterations performed. Apply the decal near the Vehicle Emission Control Information Decal and cover it with a clear plastic decal shield.

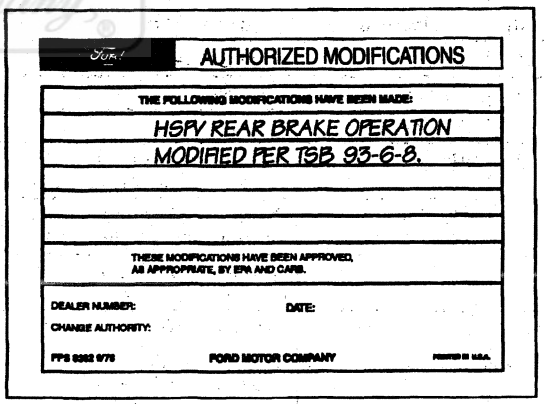

H9914-A

SPECIFICATIONS

LUBRICANT/ADHESIVE/CLEANER SPECIFICATIONS

Description	Part Number	Ford Specification
High Performance DOT 3 Brake Fluid	C6AZ-19542-AA	ESA-M6C25-A and DOT 3

Official Licensed Product Ford Motor Company

SPECIFICATIONS (Continued)

TORQUE SPECIFICATIONS

Description	N·m	Lb-Ft	Lb-In
Master Cylinder-to-Vacuum Booster Nut (all Except F-Super Duty with Hydro-Boost)	18-34	13-25	—
Vacuum Booster-to-Firewall and Pedal Support Nut (all Except F-Super Duty with Hydro-Boost)	18-34	13-25	—
Master Cylinder to Hydro-Boost — F-Super Duty	22-30	16-22	—
Hydro-Boost to Mounting Brackets — F-Super Duty	22-30	16-22	—
Master Cylinder to Power Brake Booster Nut	24-34	18-25	—
Brake Rod Jam Nut	50-67	37-49	—
Brake Tube Clip Nut	30-40	22-30	—
Screw, Pedal and Bracket Assembly-to-Y-Brace	20-27	15-20	—
Nut, Bellcrank Pivot Bolt, F-Super Duty Commercial Chassis	47-67	35-49	—
Nut, Bracket-to-Dash Panel, F-Super Duty Commercial Chassis	20-27	15-20	—
Nut, Booster Mounting Bracket-to-Frame, F-Super Duty Motorhome Chassis	88-104	65-77	—
Pedal Shaft Nut, F-Super Duty Motorhome Chassis	50-67	37-49	—
Nut, Bellcrank Pivot Bolt, F-Super Duty Motorhome Chassis	50-67	37-49	—
Front Disc Brake Caliper Flow Bolt	30-40	22-30	—
Front Brake Hose Bolt	3-5	—	27-44
Brake Tube-to-Master Cylinder Fitting (Rear)	15-20	11-15	—
Brake Tube-to-Master Cylinder Fitting (Front)	22-28	16-21	—
Height Sensing Proportioning Valve Mounting Bolts	30-40	22-30	—
Height Sensing Proportioning Valve Bracket to Frame Bolt	26-40	19-30	—

(Continued)

TORQUE SPECIFICATIONS (Cont'd)

Description	N·m	Lb-Ft	Lb-In
Brake Load Sensor Proportioning Valve Linkage-to-Differential Housing Nuts	34-46	25-34	—
Brake Load Sensor Proportioning Valve Shaft Nut	11-14	8-10	—
Flow Bolt, Height Sensing Proportioning Valve	23-34	17-25	—
Nut, Height Sensing Proportioning Valve Linkage Arm	15-20	11-15	—
Wheel Cylinder Bleeder Screws	7-9	—	62-80
Caliper Bleeder Screws	17-23	13-17	—
Anti-Lock Brake Control Module-to-Frame Nut	17-23	13-17	—

SPECIAL SERVICE TOOLS/EQUIPMENT

SPECIAL SERVICE TOOLS REQUIRED

Tool Number/ Description	Illustration
T90P-50-ALA Anti-Lock Brake Adapter (Bleeder Box)	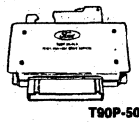 T90P-50-ALA
T93T-50-ALA Anti-Lock Brake Adapter (Jumper Cable)	T93T-50-ALA

ROTUNDA EQUIPMENT

Model	Description
104-00064	Brake Bleeder

Official Licensed Product Ford Motor Company

SECTION 06-07A Brake, Power, Vacuum, Single and Tandem Diaphragm

SUBJECT	PAGE
VEHICLE APPLICATION	06-07A-1
DESCRIPTION AND OPERATION	
Brake Booster, Power	06-07A-1
DIAGNOSIS AND TESTING	
Brake System, Power	06-07A-4
REMOVAL AND INSTALLATION	
Brake Booster Check Valve, Power	06-07A-6
Brake Booster, Power	06-07A-4
DISASSEMBLY AND ASSEMBLY	
Brake Booster Check Valve, Power	06-07A-6
CLEANING AND INSPECTION	
Brake Booster, Power	06-07A-6
Vacuum/Brake Booster Hose and Power Brake Booster Check Valve	06-07A-6
ADJUSTMENTS	
Power Brake Booster-to-Brake Master Cylinder Push Rod	06-07A-6
SPECIFICATIONS	06-07A-7

VEHICLE APPLICATION

F-250 Heavy Duty and F-350

DESCRIPTION AND OPERATION

Brake Booster, Power

This section provides service information for the power brake boosters (2005) (single and tandem) using engine manifold vacuum. Information for the vacuum pump brake system is given in Section 06-07B and for the hydro-boost system in Section 06-07C.

A vacuum-type power brake booster is a partially sealed container. The interior is divided by a diaphragm into two separate chambers, A and B. The brake pedal-to-power brake booster push rod enters on one side, and the brake master cylinder push rod exits on the other. The diaphragm is shown by the curved line in the center. Notice that the brake master cylinder push rod is attached to the center of the diaphragm.

There are three valves that control the vacuum in the power brake booster. The power brake booster check valve opens to allow the intake manifold vacuum to evacuate the power brake booster. When it closes, it holds the vacuum in the chambers.

The equalizer valve links the two chambers. When it is open, the vacuum in the chambers can equalize. When it closes, the chambers are separated.

The vacuum bleed valve functions to reduce the amount of vacuum in chamber B when boost is required.

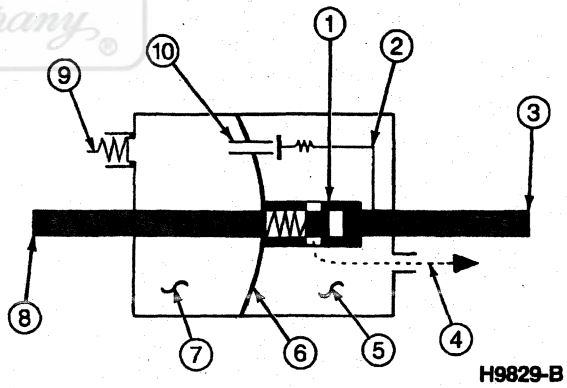

H9829-B

Item	Part Number	Description
1	—	Vacuum Bleed Valve (Part of 2005), Closed
2	—	Equalizer Valve Linkage (Part of 2005)
3	—	Brake Pedal-to-Power Brake Booster Push Rod (Part of 2005)
4	—	Vent to Atmosphere (Part of 2005)
5	—	Vacuum Chamber B (Part of 2005)
6	—	Diaphragm (Part of 2005)
7	—	Vacuum Chamber A (Part of 2005)

(Continued)

DESCRIPTION AND OPERATION (Continued)

Item	Part Number	Description
8	—	Power Brake Booster-to-Brake Master Cylinder Push Rod (Part of 2005)
9	2365	Power Brake Booster Check Valve
10	—	Equalizer Valve (Part of 2005), Open

Brakes Activated

As the brake pedal-to-power brake booster push rod moves forward, its motion closes the equalizer valve. This isolates chambers A and B, but they are still under vacuum.

As the brake pedal-to-power brake booster push rod moves ahead farther, a port in the brake pedal-to-power brake booster push rod begins to line up with ports in the sleeve. This vents chamber B to the outside and reduces the amount of vacuum in chamber B.

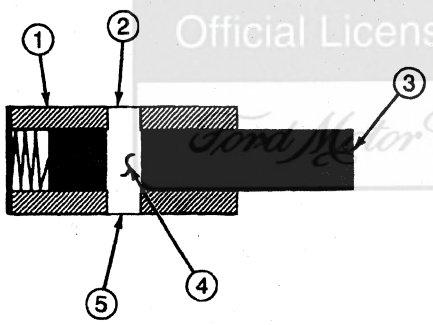

H9830-B

Item	Part Number	Description
1	—	Sleeve (Part of 2005)
2	—	Sleeve Port (Part of 2005), Open
3	—	Brake Pedal-to-Power Brake Booster Push Rod (Part of 2005)
4	—	Brake Pedal Push Rod Port (Part of 2005), Open
5	—	Sleeve Port (Part of 2005), Open

With more vacuum in chamber A and less in chamber B, the diaphragm is forced forward in the direction of the brake master cylinder (2140). This force acts on the brake master cylinder push rod, providing a boost.

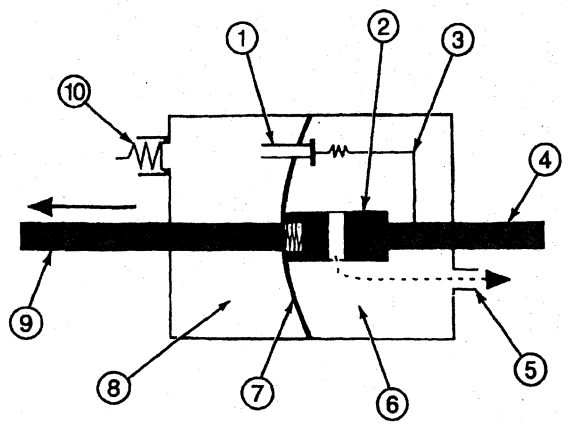

H9831-B

Item	Part Number	Description
1	—	Equalizer Valve (Part of 2005), Closed
2	—	Vacuum Bleed Valve (Part of 2005), Open
3	—	Equalizer Valve Linkage (Part of 2005)
4	—	Brake Pedal-to-Power Brake Booster Push Rod (Part of 2005)
5	—	Vent to Atmosphere (Part of 2005)
6	—	Vacuum Chamber B (Part of 2005), Less Vacuum
7	—	Diaphragm (Part of 2005), Deflected by Pressure Differential
8	—	Vacuum Chamber A (Part of 2005)
9	—	Power Brake Booster-to-Brake Master Cylinder Push Rod (Part of 2005)
10	2365	Power Brake Booster Check Valve

The vacuum bleed valve is not just an open / close valve. A spring is shown at the forward end of the brake pedal-to-power brake booster push rod to indicate an important point.

Depending on how hard the driver pushes on the brake pedal (2455), the brake pedal-to-power brake booster push rod and the sleeve slide back and forth in relation to each other as they move forward. This opens and closes the vent in such a way that only the required amount of vacuum is drawn down.

Braking hard bleeds off more vacuum, producing more boost. Brake lightly, and less boost results. Once the level of boost corresponds to the applied brake pedal force, the vacuum bleed valve closes and holds that level of vacuum.

Official Licensed Product Ford Motor Company

DESCRIPTION AND OPERATION (Continued)

Step-Through

If enough force is applied to the brake pedal-to-power brake booster push rod, the rod moves forward enough to come in direct contact with the power brake booster-to-brake master cylinder push rod where it connects to the diaphragm. At this point, all available boost has been provided and force is directly applied to the power brake booster-to-brake master cylinder push rod mechanically. This point is called "step-through," and only occurs with low vacuum or excessive power brake booster-to-brake master cylinder pedal force.

Brakes Released

When the brake pedal is released, the brake pedal-to-power brake booster push rod retracts. As it retracts, the equalizer valve opens and equalizes the vacuum in both chambers. This brake pedal-to-power brake booster push rod slides with the sleeve and remains in the closed position. If vacuum is available at the power brake booster check valve, the power brake booster recharges itself, ready for the next application of the brakes.

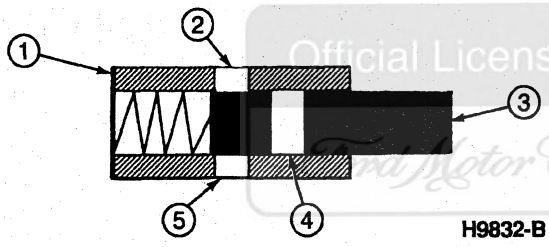

H9832-B

Item	Part Number	Description
1	—	Sleeve (Part of 2005)
2	—	Sleeve Port (Part of 2005), Closed
3	—	Brake Pedal-to-Power Brake Booster Push Rod (Part of 2005)
4	—	Brake Pedal Push Rod Port (Part of 2005), Closed
5	—	Sleeve Port (Part of 2005), Closed

On vehicles with gasoline engines (6007) and vacuum type power brake boosters, the boost will renew itself quickly. When the boost is needed again, it will be fully there. However, if something happens to prevent the vacuum from developing, boost will decrease with each application, until the remaining vacuum is used up.

Tandem Boosters

On some larger vehicles using vacuum-boosted brakes, additional boost force is supplied by tandem type power brake boosters. Tandem type power brake boosters have two sets of vacuum chambers instead of one. This substantially increases the diaphragm surface area, which in turn increases the boost. Otherwise, tandem type power brake boosters work the same as a single chamber type power brake booster.

For the same brake pedal force, more hydraulic line pressure is created with a tandem type power brake booster. This results in longer brake pedal travel, causing the brakes to feel springier. This is normal. Springy should not be confused with spongy.

On diesel applications, tandem vacuum brakes may experience greater brake pedal drop than single type power brake boosters as the vacuum pump (2A451) rebuilds vacuum in the chamber following brake applications. This is a normal characteristic.

A vacuum pump provides power to the power brake booster on diesel engines, which have no manifold vacuum. Refer to Section 06-07B for vacuum pump system procedures.

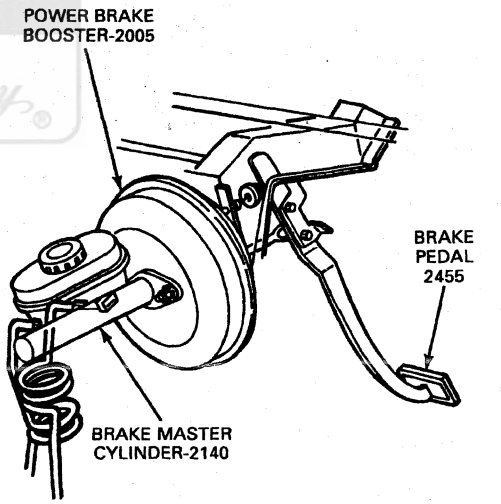

H4974-B

Vacuum Boosters, Diesel-Powered Vehicles

Diesel powered vehicles require a pump to develop the vacuum for the booster, since there is no intake manifold vacuum. The capacity of these pumps is small compared to the displacement of a gasoline engine. As a result, a diesel vacuum pump takes longer to recover after brake application. Repeated applications of the brakes may limit the boost and change the feel of the brake pedal.

Official Licensed Product Ford Motor Company

DESCRIPTION AND OPERATION (Continued)

For example, after braking to a hard stop, the vacuum in a diesel booster may be significantly reduced. If the driver continues to apply the brakes at the stop, the vacuum will start to build again and the pedal will sink as the increasing boost moves the diaphragm forward. This does not mean there is a fluid leak or a malfunction in the system. Always check the vacuum supply on a diesel before suspecting other defects when the complaint is pedal drop.

DIAGNOSIS AND TESTING

Brake System, Power

Refer to Section 06-00.

REMOVAL AND INSTALLATION

Brake Booster, Power

CAUTION: Make sure the power brake booster rubber reaction disc is installed properly. If the power brake booster-to-brake master cylinder push rod is removed or accidentally pulled out, it can dislodge the power brake booster rubber reaction disc from its seat in the power brake booster (2005). Symptoms of a dislodged power brake booster rubber reaction disc are excessive brake pedal travel and extreme power brake sensitivity. If the power brake booster-to-brake master cylinder push rod is removed, remove the power brake booster front seal and look into the power brake booster to where the power brake booster-to-brake master cylinder push rod seats. The power brake booster reaction disc is black rubber. If the power brake booster rubber reaction disc is dislodged, a silver colored valve plunger will be exposed. If the power brake booster rubber reaction disc cannot be located, installed and aligned, then the power brake booster unit must be replaced.

Official Licensed Product
Ford Motor Company

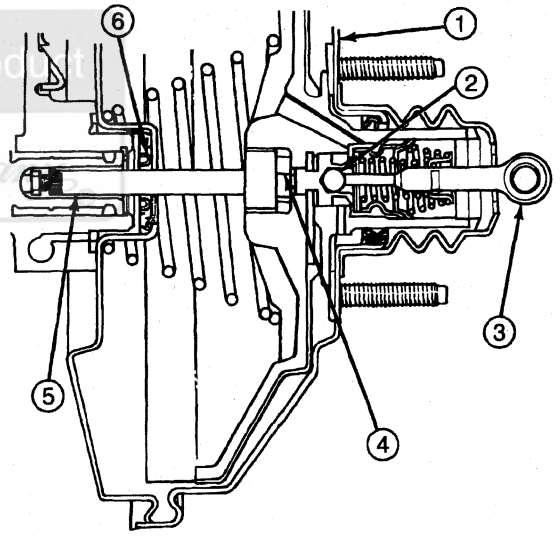

H2511-D

Item	Part Number	Description
1	2005	Power Brake Booster
2	—	Valve Plunger (Part of 2005)
3	—	Brake Pedal-to-Power Brake Booster Push Rod (Part of 2005)
4	—	Power Brake Booster Rubber Reaction Disc (in Position) (Part of 2005)
5	—	Power Brake Booster-to-Brake Master Cylinder Push Rod (Part of 2005)
6	—	Power Brake Booster Front Seal (Part of 2005)

REMOVAL AND INSTALLATION (Continued)

Removal

1. Disconnect the battery ground cable (14301).
2. Support the power brake booster from the underside with a prop.
3. Loosen the clamp that secures the vacuum booster hose to the power brake booster check valve, and remove the vacuum booster hose. Remove the power brake booster check valve.
4. Remove the wraparound clip (securing brake lines) from power brake booster inboard stud.
5. Remove the brake master cylinder-to-power brake booster retaining nuts.
6. Pull the brake master cylinder (2140) off the power brake booster and leave it supported by the prop, far enough away to allow removal of the power brake booster.
7. From inside the cab, remove the self-locking pin and slide the stoplight switch (13480), brake master cylinder push rod spacers (2B129) and brake master cylinder push rod bushing (2474) off the brake pedal pin.
8. From inside the cab, remove the nuts retaining the power brake booster to the dash. Remove the power brake booster from the engine compartment.

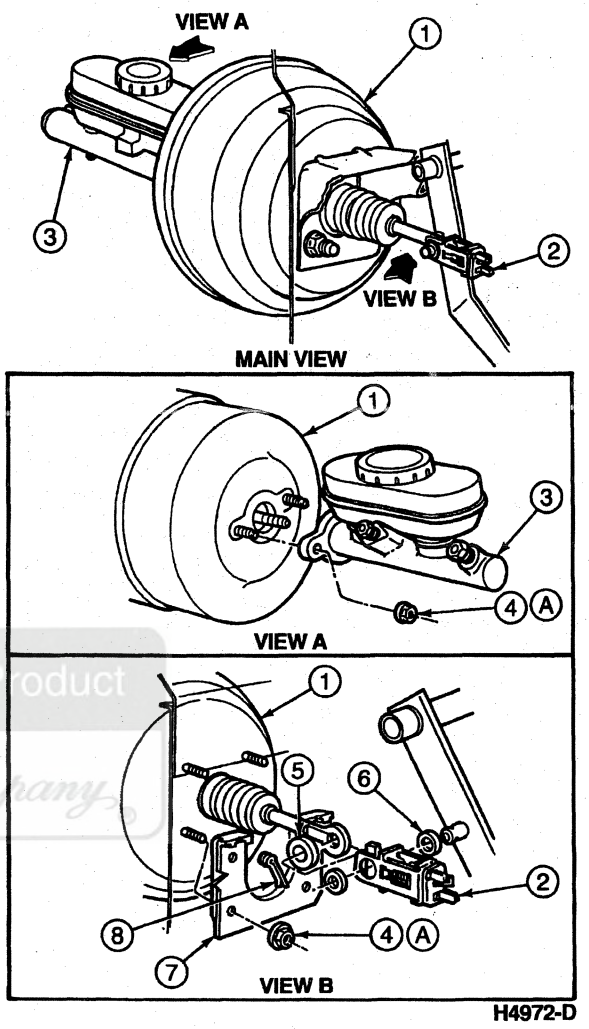

H4972-D

Item	Part Number	Description
1	2005	Power Brake Booster
2	13480	Stoplight Switch
3	2140	Brake Master Cylinder
4	382802-S2	Nut
5	2474	Brake Master Cylinder Push Rod Bushing
6	2B129	Brake Master Cylinder Push Rod Spacer
7	2467	Brake Pedal Bracket
8	380699-S100	Self-Locking Pin
A	—	Tighten to 20-28 N·m (15-21 Lb-Ft)

Official Licensed Product
Ford Motor Company

REMOVAL AND INSTALLATION (Continued)

Installation

1. NOTE: Make sure the brake pedal-to-power brake booster push rod is positioned on the correct side of the brake pedal (2455) to install onto the brake pedal pin prior to tightening the power brake booster to the dash.

   Mount the power brake booster on the engine side of the dash panel by sliding the brake pedal bracket mounting studs and brake pedal-to-power brake booster push rod in through the holes in the dash.
2. Install the brake pedal bracket-to-dash panel retaining nuts from inside the cab. Tighten nuts to 20-28 N·m (15-21 lb-ft).
3. Position the brake master cylinder on the power brake booster. Install the retaining nuts and remove the prop from underneath the brake master cylinder. Tighten nuts to 20-28 N·m (15-21 lb-ft).
4. Install the wraparound clip on the booster inboard stud.
5. Install the power brake booster check valve. Connect the vacuum booster hose to the power brake booster check valve and secure with the clamp. Make sure the vacuum booster hose is routed so as to avoid abrasion, damage or pinching.
6. Install the brake master cylinder push rod spacers and position the stoplight switch on the end of the brake pedal-to-power brake booster push rod from inside the cab. Then install the stoplight switch and brake pedal-to-power brake booster push rod on the brake pedal pin, along with brake master cylinder push rod bushings on each side, and secure with the self-locking pin.
7. Connect the stoplamp switch wiring.
8. NOTE: When the battery (10655) has been disconnected and reconnected, some abnormal drive symptoms may occur while the powertrain control module (PCM)(12A650) relearns its adaptive strategy. The vehicle may need to be driven 16 km (10 miles) or more to relearn the strategy.

   Reconnect battery ground cable.
9. Start the engine (6007) and check brake operation before moving the vehicle.

Brake Booster Check Valve, Power

The power brake booster (2005) is serviced as an assembly. The power brake booster check valve is not separately serviceable.

DISASSEMBLY AND ASSEMBLY

Brake Booster Check Valve, Power

No internal parts of the power brake booster (2005) are separately serviceable. If the power brake booster is found to be worn or damaged, it must be replaced as an assembly, including the power brake booster check valve.

CLEANING AND INSPECTION

Brake Booster, Power

1. Remove any debris from the power brake booster (2005).
2. Clean the power brake booster with an approved cleaner such as Multi-Purpose Cleaner Concentrate B8A-19523-AA or equivalent meeting Ford specification ESR-M14P4-A. Inspect the power brake booster for damage and loose mounting.
3. Repair or replace the power brake booster as necessary and tighten any loose mounting nuts to specification.

Vacuum/Brake Booster Hose and Power Brake Booster Check Valve

1. Clean the vacuum booster hose with an approved cleaner such as Multi-Purpose Cleaner Concentrate B8A-19523-AA or equivalent meeting Ford specification ESR-M14P4-A.
2. Inspect the vacuum booster hose and power brake booster check valve for damage and loose mounting.
3. Replace the vacuum booster hose as necessary. If necessary, the power brake booster check valve must be replaced as part of the power brake booster assembly.
4. Tighten loose hose clamps securely.

ADJUSTMENTS

Power Brake Booster-to-Brake Master Cylinder Push Rod

The power brake booster-to-brake master cylinder push rod has an adjustment screw to maintain the correct relationship between the power brake booster control valve plunger and the brake master cylinder piston.

If the power brake booster-to-brake master cylinder push rod is too long, it will prevent the brake master cylinder piston from completely releasing hydraulic pressure, causing the brakes to drag.

ADJUSTMENTS (Continued)

If the power brake booster-to-brake master cylinder push rod plunger is too short, it will cause excessive brake pedal travel and an undesirable clunk in the power brake booster area. Remove the brake master cylinder (2140) for access to the power brake booster-to-brake master cylinder push rod.

1. Fabricate a gauge as illustrated and place it against the brake master cylinder mounting surface of the power brake booster (2005).
2. Adjust the power brake booster-to-brake master cylinder push rod screw by turning it until the end just touches the inner edge of the slot in the gauge.

Power Brake Booster-to-Brake Master Cylinder Push Rod Gauge Dimensions and Adjustment

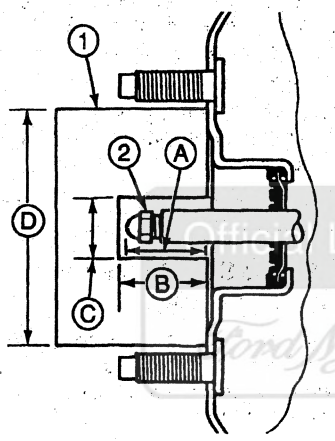

H1330-N

Item	Part Number	Description
1	—	Shop-Fabricated Gauge
2	—	Adjustment Screw (Part of 2005)
A	—	24.89-25.27 mm (0.980-0.995 In.)
B	—	25.27 mm (0.995 In.)
C	—	19 mm (0.75 In.)
D	—	76 mm (3 In.)

(Continued)

SPECIFICATIONS

POWER BRAKE BOOSTER APPLICATION

Booster Identification	F-250 Heavy Duty and F-350
Part Number	2005
Type	Dual Diaphragm
Make	Bendix
O/S Diameter mm (In.)	277 (10.92)
Effective Diameter mm (In.)	342 (13.46)

LUBRICANT/ADHESIVE/CLEANER SPECIFICATIONS

Description	Part Number	Ford Specification
Multi-Purpose Cleaner Concentrate	B8A-19523-AA	ESR-M14P4-A

TORQUE SPECIFICATIONS

Description	N·m	Lb-Ft
Brake Master Cylinder-to-Power Brake Booster Nuts	20-28	15-21
Brake Pedal Bracket-to-Power Brake Booster Nut	20-28	15-21
Brake Pedal-to-Brake Pedal Reinforcement Bolt	20-28	15-21

Official Licensed Product Ford Motor Company

SECTION 06-07B Brake, Power, Vacuum Pump, 7.3L Diesel Engine

SUBJECT	PAGE
VEHICLE APPLICATION	06-07B-1
DESCRIPTION AND OPERATION	
Brake, Power, Vacuum Pump, 7.3L Diesel	06-07B-1
DIAGNOSIS AND TESTING	
Brake, Power, Vacuum Pump, 7.3L Diesel	06-07B-1
REMOVAL AND INSTALLATION	
Switch, Low Vacuum Indicator	06-07B-1
Vacuum Pump	06-07B-3
ADJUSTMENTS	
Belt Adjustment	06-07B-4
SPECIFICATIONS	06-07B-4
SPECIAL SERVICE TOOLS/EQUIPMENT	06-07B-4

VEHICLE APPLICATION

F-250 Heavy Duty, F-350 and F-Super Duty

DESCRIPTION AND OPERATION

Brake, Power, Vacuum Pump, 7.3L Diesel

On diesel engine-equipped vehicles, vacuum is supplied from a vacuum pump (2A451). The vacuum pump is driven by a drive belt (8620).

7.3L diesel-equipped vehicles use a low vacuum indicator switch.

The low vacuum indicator switch is located on the left side of the engine compartment near the vacuum pump. The low vacuum indicator switch will turn on the brake warning lamp when a low vacuum situation occurs.

Ford Motor Company Licensed Product

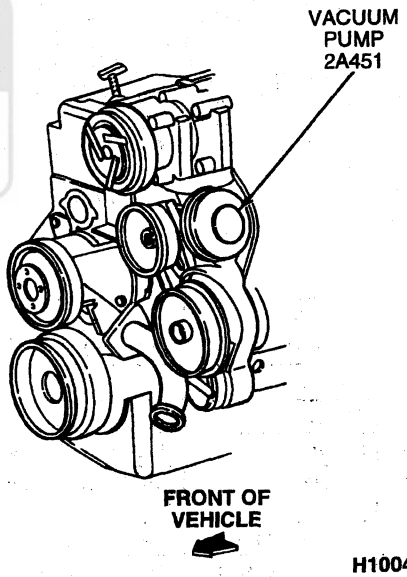

DIAGNOSIS AND TESTING

Brake, Power, Vacuum Pump, 7.3L Diesel

Refer to Section 06-00.

REMOVAL AND INSTALLATION

Switch, Low Vacuum Indicator

Removal

1. Disconnect the battery ground cable (14301).
2. Disconnect the electrical connector from the low vacuum indicator switch.

REMOVAL AND INSTALLATION (Continued)

Low Vacuum Indicator Switch

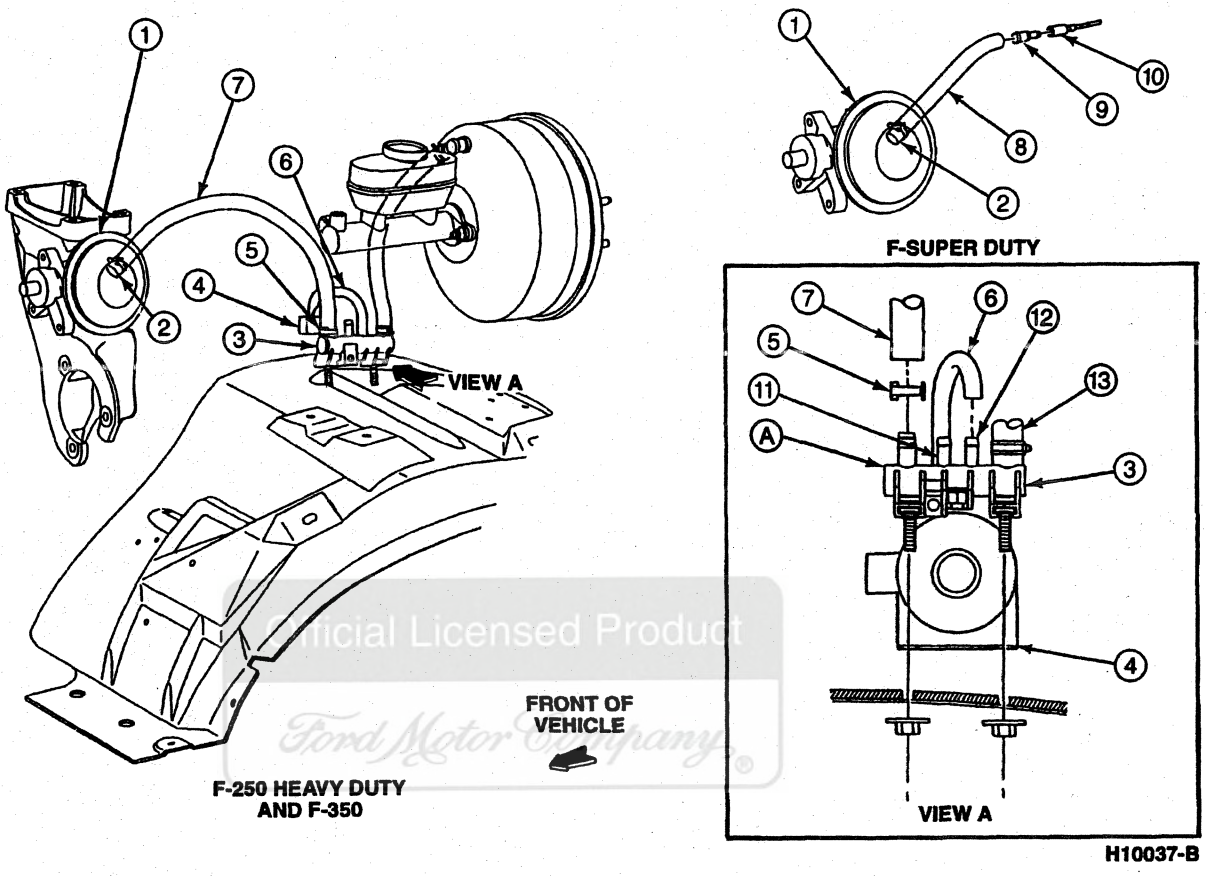

Official Licensed Product
Ford Motor Company

Item	Part Number	Description
1	2A451	Vacuum Pump
2	382984-S100	Clamp
3	9C490	Vacuum Outlet Manifold
4	12A182	Low Vacuum Indicator Switch
5	382984-S100	Clamp
6	381377-S080A	Vacuum Tube
7	381298-SX11A	Vacuum Pump-to-Vacuum Outlet Manifold Hose
8	381298-SX16A	Vacuum Pump-to-Vacuum Outlet Manifold Hose

(Continued)

Item	Part Number	Description
9	9K319	Evaporative Emission Hose Connector
10	19C827	Vacuum Hose Harness
11	—	Climate Control Line Port (Part of 9C490)
12	—	Low Vacuum Indicator Switch Port (Part of 9C490)
13	—	To Power Brake Booster
A	—	White End Points Towards Front of Vehicle

3. Disconnect the low vacuum indicator switch-to-vacuum outlet manifold assembly hose.

4. Remove the two low vacuum indicator switch nuts and the switch.

REMOVAL AND INSTALLATION (Continued)

Installation

1. NOTE: When the battery (10655) has been disconnected and reconnected, some abnormal drive symptoms may occur while the powertrain control module (PCM)(12A650) relearns its adaptive strategy. The vehicle may need to be driven 16 km (10 miles) or more to relearn the strategy.

   Follow removal procedures in reverse order.
2. Tighten the low vacuum indicator switch manifold nuts to 5.2-7.2 N·m (46-63 lb-in).

Vacuum Pump

SPECIAL SERVICE TOOL(S) REQUIRED

Description	Tool Number
Fan Clutch Nut Wrench	T83T-6312-B
Fan Clutch Pulley Holder	T94T-6312-AH
Steering Pump Pulley Remover	T69L-10300-B
Steering Pump Pulley Replacer	T65P-3A733-C

Removal

1. Remove drive belt (8620).
2. Partially drain engine coolant.
3. Remove upper radiator hose clamps and upper radiator hose (8260).
4. Disconnect coolant reservoir hose at radiator and support.
5. Remove fan blade (8600) and fan clutch (8A616) using Fan Clutch Nut Wrench T83T-6312-B and Fan Clutch Pulley Holder T94T-6312-AH. Set fan blade and fan clutch in fan shroud (8146).

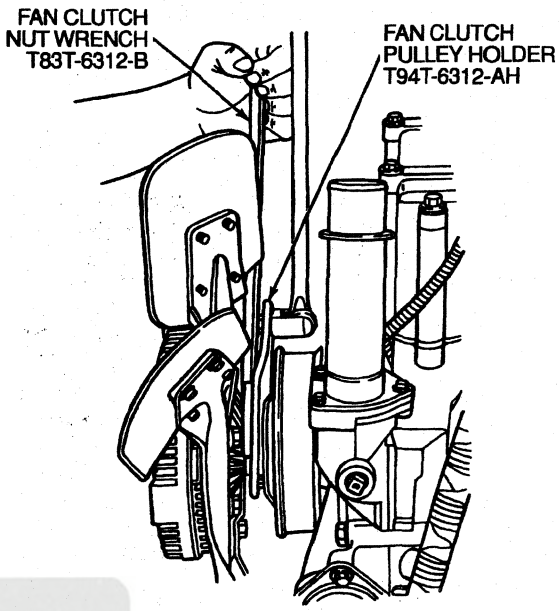

A23072-A

6. Remove two fan shroud screws.
7. Remove fan shroud, fan blade and fan clutch.
8. Remove vacuum pump pulley using Steering Pump Pulley Remover T69L-10300-B.
9. Remove vacuum pump bolts.
10. Disconnect vacuum pump hose and remove vacuum pump (2A451).

Installation

1. Connect vacuum pump hose and install vacuum pump.
2. Install vacuum bolts. Tighten bolts to 23-32 N·m (17-23 lb-ft).
3. Install vacuum pump pulley using Steering Pump Pulley Replacer T65P-3A733-C.
4. Position the fan shroud, fan blade and fan clutch.
5. Install fan shroud screws.
6. Install fan blade and fan clutch using Fan Clutch Nut Wrench T83T-6312-B and Fan Clutch Pulley Holder T94T-6312-AH.
7. Connect coolant reservoir hose at radiator and support.
8. Install upper radiator hose and hose clamps.
9. Refill engine coolant.
10. Install drive belt.

Official Licensed Product

REMOVAL AND INSTALLATION (Continued)

Vacuum Pump and Bracket

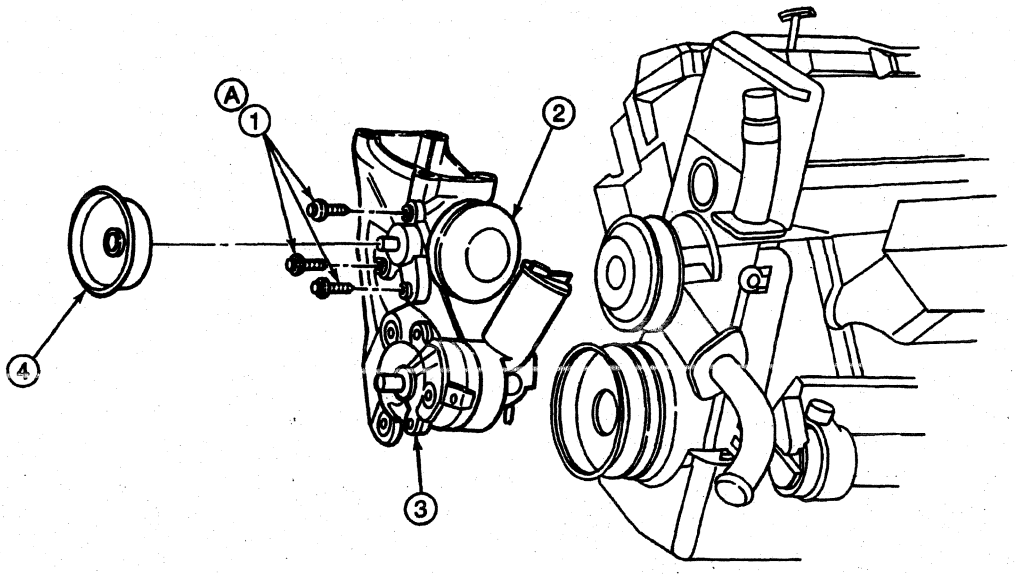

L9876-A

Item	Part Number	Description
1	N605790-S2	Bolt, Vacuum Pump-to-Bracket
2	2A451	Vacuum Pump
3	3A674	Power Steering Pump
4	26487	Vacuum Pump Pulley
A	—	Tighten to 23-32 N·m (17-23 Lb-Ft)

(Continued)

Official Licensed Product Ford Motor Company

ADJUSTMENTS

Belt Adjustment

The drive belt tensioner (6B209) has no provision for adjustment and will be damaged if forced to travel beyond its operating range.

SPECIFICATIONS

VACUUM PUMP BELT SPECIFICATIONS

Engine	Tensioning Method	Belt Tension
7.3L Diesel	Automatic	378 N (85 Lb) Minimum

TORQUE SPECIFICATIONS

Description	N·m	Lb-Ft	Lb-In
Low Vacuum Indicator Switch Nuts	5.2-7.2	—	46-63
Vacuum Pump-to-Bracket Bolts	23-32	17-23	—

SPECIAL SERVICE TOOLS/EQUIPMENT

SPECIAL SERVICE TOOLS REQUIRED

Tool Number/ Description	Illustration
T65P-3A733-C Steering Pump Pulley Replacer	T65P-3A733-C
T69L-10300-B Steering Pump Pulley Remover	T69L-10300-B
T83T-6312-B Fan Clutch Nut Wrench	T83T-6312-B
T94T-6312-AH Fan Clutch Pulley Holder	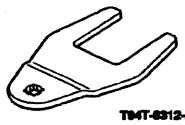 T94T-6312-AH

SECTION 06-07C Brake, Power, Hydro-Boost Booster

SUBJECT	PAGE
VEHICLE APPLICATION	06-07C-1
DESCRIPTION AND OPERATION	
Brake, Power, Hydro-Boost Booster	06-07C-1
Reserve System	06-07C-4
DIAGNOSIS AND TESTING	
Brake, Power, Hydro-Boost Booster	06-07C-6
REMOVAL AND INSTALLATION	
Hydro-Boost Booster	06-07C-7
REMOVAL AND INSTALLATION (Cont'd.)	
Steering and Hydro-Boost Plumbing	06-07C-10
ADJUSTMENTS	
Brake Pedal Rod, Motorhome	06-07C-12
Hydro-Boost Unit, Bleeding	06-07C-12
SPECIFICATIONS	06-07C-13

VEHICLE APPLICATION

F-Super Duty Chassis Cab and Motorhome Chassis

DESCRIPTION AND OPERATION

Brake, Power, Hydro-Boost Booster

The Bendix Hydro-Boost brake booster is hydraulically operated by the power steering pump (3A674). The power steering pump provides fluid pressure to operate both the power brake booster (2005) and the power steering gear (3504).

A Hydro-Boost reserve system (accumulator) stores sufficient fluid under pressure to provide at least two power-assisted brake applications in the event the power steering pump fluid flow is interrupted.

The brakes can also be applied manually if the reserve system is depleted.

Model identification is stamped into the power brake booster housing near the power steering right turn pressure hose (3A717).

With the Hydro-Boost at rest (engine (6007) on, brakes released), power steering fluid flows from the inlet port, across the land 3 and through the outlet port to the steering gear. In this position, steering pressure created by the steering gear and power steering pump is isolated from the boost cavity by the spool valve. Lands 2 and 4 block this steering pressure which prevents activation of the unit.

Any leakage goes directly back to the power steering oil reservoir (3A697).

Fluid Pressure Flow

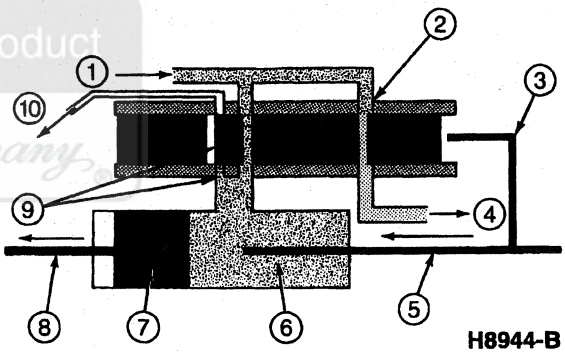

H8944-B

Item	Part Number	Description
1	—	Fluid Under Pressure from Power Steering Pump
2	—	Brake Booster Valve (Part of 2B560)
3	—	Ratio Lever (Part of 2B560)
4	—	Fluid Under Pressure to Power Steering Gear
5	—	Brake Pedal Push Rod (Part of 2B560)
6	—	Booster Cylinder (Part of 2B560)
7	—	Booster Piston (Part of 2B560)
8	—	Master Cylinder Push Rod (Part of 2B560)
9	—	Bleed Valve (Part of 2B560)
10	—	Outlet Port (Part of 2B560) to Power Steering Pump Reservoir

DESCRIPTION AND OPERATION (Continued)

Hydro-Boost Booster and Spool Valve, Unit at Rest

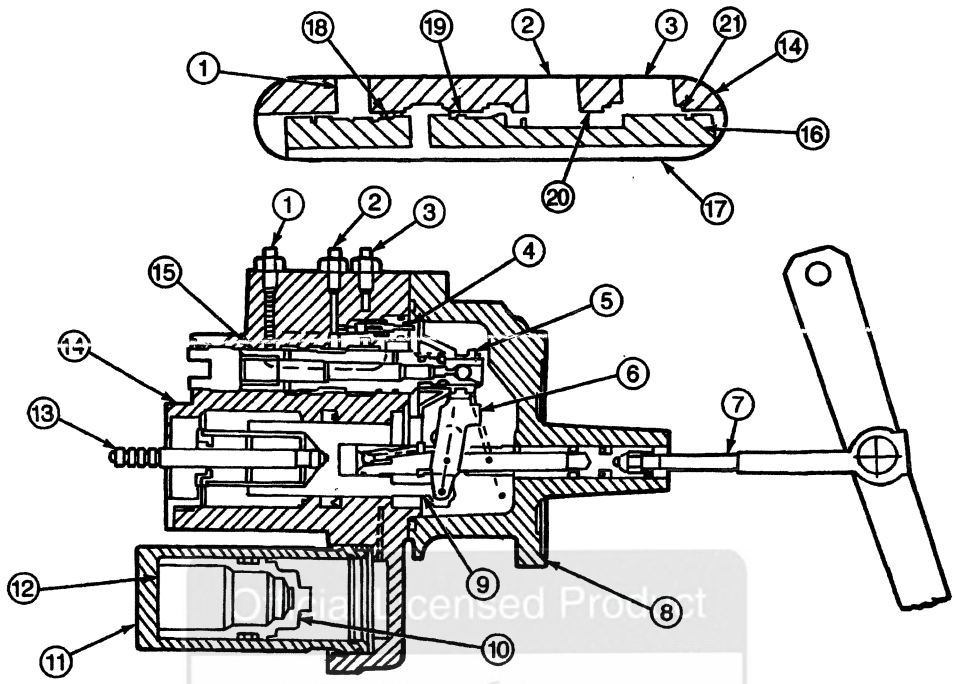

H6261-D

Item	Part Number	Description
1	—	Outlet Port (Part of 2005) to Power Steering Oil Reservoir
2	—	Inlet Port from Power Steering Pump (Part of 2005)
3	—	Outlet Port to Steering Gear (Part of 2005)
4	—	Accumulator Valve (Part of 2005)
5	—	Secondary Valve (Part of 2005)
6	—	Ratio Lever (Part of 2005)
7	—	Brake Pedal Push Rod (Part of 2005)
8	—	Housing Cover (Part of 2005)
9	—	Power Piston (Part of 2005)

(Continued)

Item	Part Number	Description
10	—	Accumulator Piston (Part of 2005)
11	—	Accumulator Cap (Part of 2005)
12	—	Nitrogen Gas
13	—	Brake Master Cylinder Push Rod (Part of 2005)
14	2005	Power Brake Booster
15	—	Primary Valve (Part of 2005)
16	—	Spool (Part of 2005)
17	—	Boost Cavity (Part of 2005)
18	—	Land 1
19	—	Land 2
20	—	Land 3
21	—	Land 4

During normal power operation, the brake pedal (2455) is applied as shown in the following illustration by brake pedal push rod travel A. The movement of the ratio lever operates the spool valve, creating hydraulic pressure due to the restriction at land 3. Fluid traverses land 2 and flows through the center of the spool valve into the boost cavity. This pressure acts on the power piston to generate the power assist and against the reaction rod to provide power assist in relation to the effort level applied to the brake pedal.

If, while braking, fluid pressure is required for steering, power steering pump pressure will rise and the spool valve will shift in an open direction, allowing more fluid to flow to the steering gear. Even under extremes of braking, the fluid flow to the steering gear is fully sufficient for steering the vehicle.

DESCRIPTION AND OPERATION (Continued)

The enlarged view of the spool valve shows the relationship of the valve lands during normal power operation. Land 1 is closed, blocking the oil flow to the power steering oil reservoir. Land 3 meters the flow of oil from the power steering pump to the steering gear and generates the hydraulic pressure that is metered across land 2 to provide assist to the brakes.

Hydro-Boost Booster and Spool Valve, Booster Generating Pressure

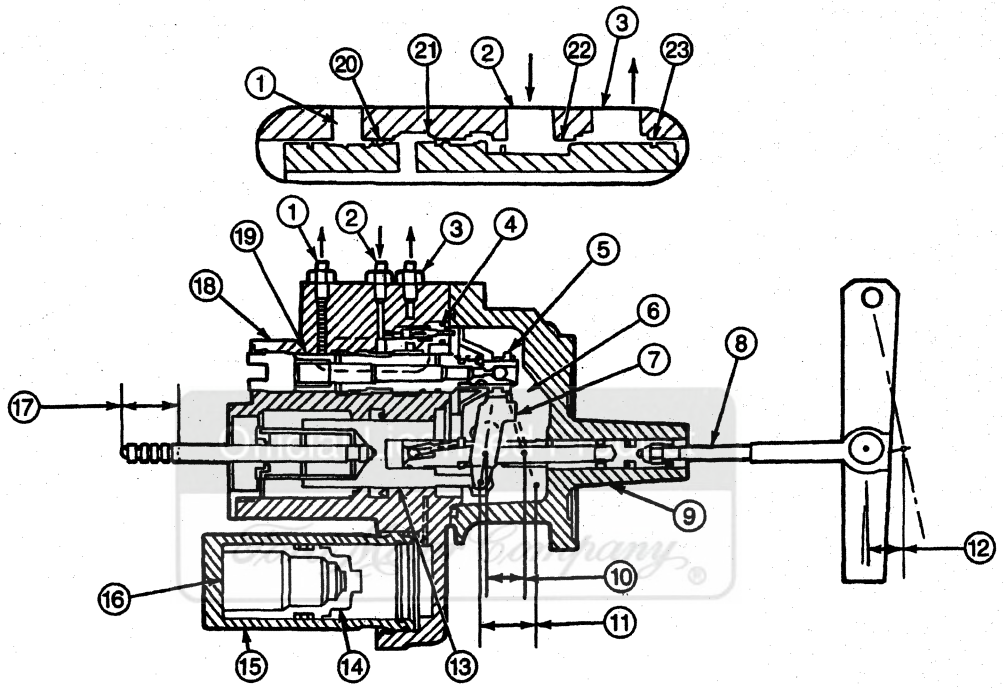

H6262-C

Item	Part Number	Description
1	—	Outlet Port (Part of 2005) to Power Steering Oil Reservoir
2	—	Inlet Port (Part of 2005) to Power Steering Pump (Part of 2005)
3	—	Outlet Port (Part of 2005) to Steering Gear (Part of 2005)
4	—	Accumulator Valve (Part of 2005)
5	—	Secondary Valve (Part of 2005)
6	—	Boost Cavity (Part of 2005)
7	—	Ratio Lever (Part of 2005)
8	—	Brake Pedal Push Rod (Part of 2005)
9	—	Housing Cover (Part of 2005)
10	—	Travel A

(Continued)

Item	Part Number	Description
11	—	Travel B
12	—	Brake Pedal Push Rod Travel A (Part of 2005)
13	—	Power Piston (Part of 2005)
14	—	Accumulator Piston (Part of 2005)
15	—	Accumulator Cover (Part of 2005)
16	—	Nitrogen Gas
17	—	Brake Master Cylinder Push Rod Travel B
18	2005	Power Brake Booster
19	—	Primary Valve (Part of 2005)
20	—	Land 1
21	—	Land 2
22	—	Land 3
23	—	Land 4

DESCRIPTION AND OPERATION (Continued)

The following illustration shows the same operation, except pressure is generated by the steering gear and is also being used for braking. During this mode of operation, the spool valve travel is slightly less than in the first case.

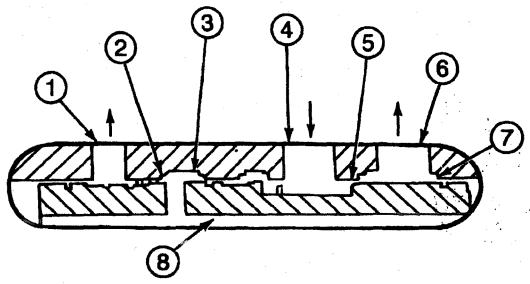

STEERING GEAR GENERATING PRESSURE

H6263-B

Item	Part Number	Description
1	—	Outlet Port (Part of 2005) to Power Steering Oil Reservoir
2	—	Land 1 (Part of 2005)
3	—	Land 2 (Part of 2005)
4	—	Inlet Port (Part of 2005) from Power Steering Pump
5	—	Land 3 (Part of 2005)
6	—	Outlet Port (Part of 2005) to Steering Gear
7	—	Land 4 (Part of 2005)
8	—	Boost Cavity (Part of 2005)

Reserve System

The reserve braking system consists of a charging valve, an accumulator valve and a compressed gas accumulator. The system is open to the pressure port of the power brake booster (2005).

The accumulator is charged by the pump pressure during normal steering or braking operation through an accumulator charging valve that communicates with the inlet port from the power steering pump (3A674).

The accumulator charging valve has an orifice and a check valve. Fluid from the power steering pump passes around the check valve into the accumulator if the power steering pump pressure exceeds the pressure in the accumulator. The charging rate is controlled by the orifice to minimize its effect on fluid flow to the steering gear (3504). The check valve prevents reverse flow when the accumulator pressure is greater than power steering pump pressure.

The accumulator charging valve is a small poppet-type valve held closed by the pressure stored in the accumulator. An actuator on the spool valve sleeve opens the accumulator charging valve when a stop is required and no power steering pump pressure is available. This allows pressure stored in the accumulator to assist the brake effort.

Fluid pressure can also enter the accumulator from the boost chamber through the accumulator charging valve. This condition occurs whenever boost chamber pressure momentarily exceeds accumulator pressure.

A pressure relief valve vents the accumulator to the inlet port from the power steering pump whenever pressure in the accumulator exceeds approximately 9,652 kPa (1,400 psi).

DESCRIPTION AND OPERATION (Continued)

Hydro-Boost Booster, Reserve Operation

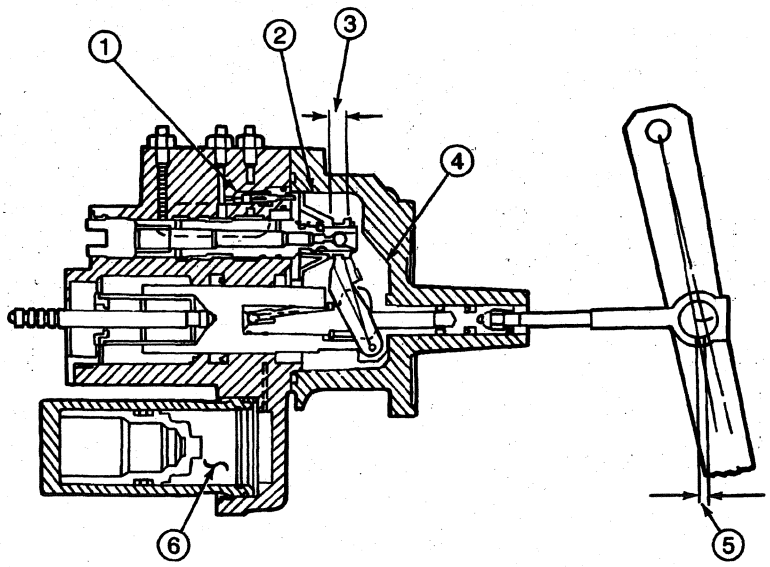

H6264-C

Item	Part Number	Description
1	—	Accumulator Charging Valve (Part of 2005)
2	—	Accumulator Charging Valve Contacted
3	—	Lever Travel
4	—	Boost Cavity (Part of 2005)
5	—	Brake Pedal Push Rod Travel
6	—	Accumulator Piston (Part of 2005)

(Continued)

When reserve power is depleted (manual operation), pressure on the brake pedal (2455) will cause the input bracket to separate from a shoulder on the brake pedal push rod, compressing the input spring and allowing a change of ratio between brake pedal and brake master cylinder push rods. This ratio increase will cause the brake pedal to travel further and increases the mechanical force applied to the brake master cylinder (2140).

DESCRIPTION AND OPERATION (Continued)

Hydro-Boost Booster, Manual Operation

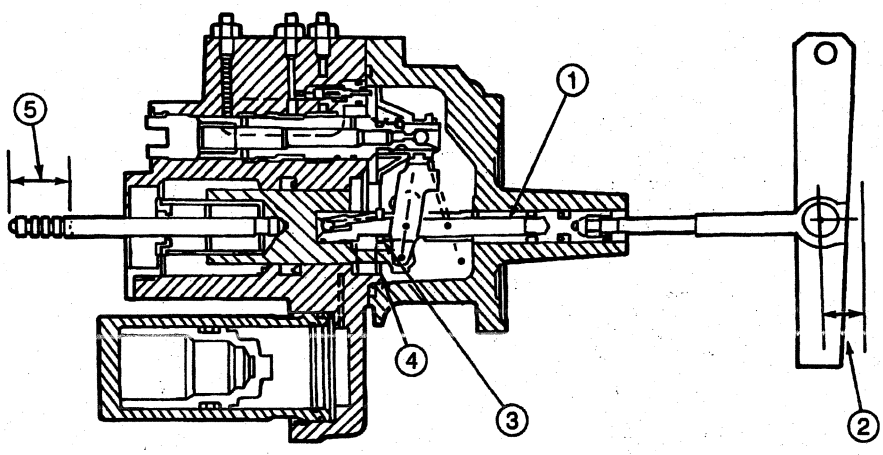

H6265-C

Item	Part Number	Description
1	—	Input Rod Spring (Part of 2005)
2	—	Input Rod Travel
3	—	Input Bracket (Part of 2005)
4	—	Separation Between Input Bracket and Input Rod Shoulder
5	—	Brake Master Cylinder Push Rod Travel

(Continued)

DIAGNOSIS AND TESTING

Brake, Power, Hydro-Boost Booster

Refer to Section 06-00.

REMOVAL AND INSTALLATION

Hydro-Boost Booster

WARNING: THE POWER BRAKE BOOSTER (2005) SHOULD NOT BE CARRIED BY THE ACCUMULATOR, NOR SHOULD IT EVER BE DROPPED ON THE ACCUMULATOR. CHECK THE SNAP RING ON THE ACCUMULATOR FOR PROPER SEATING BEFORE THE POWER BRAKE BOOSTER IS USED. THE ACCUMULATOR CONTAINS HIGH-PRESSURE NITROGEN GAS AND CAN BE DANGEROUS IF MISHANDLED.

WARNING: IF THE ACCUMULATOR IS TO BE DISPOSED OF, IT MUST NOT BE EXPOSED TO EXCESSIVE HEAT, FIRE OR INCINERATION. BEFORE DISCARDING THE ACCUMULATOR, DRILL A 1.6-MM (1/16-INCH) DIAMETER HOLE IN THE END OF THE ACCUMULATOR CAN TO RELIEVE THE GAS PRESSURE. ALWAYS WEAR SAFETY GLASSES WHEN PERFORMING THIS OPERATION.

Removal

1. **CAUTION: Do not activate the power brake booster with the brake master cylinder (2140) removed.**

   With the engine (6007) off, depress the brake pedal (2455) several times to discharge the accumulator.
2. Remove the brake master cylinder from the Hydro-Boost power brake booster. Support the brake master cylinder and position out of the way.
3. Disconnect power steering right turn pressure hose (3A717), power steering left turn pressure hose (3A714) and power steering return line hose (3A005) from the power brake booster.
4. Disconnect the brake pedal push rod from the brake pedal.
5. Remove the power brake booster nuts, and remove the power brake booster from the vehicle.

Installation

1. Install the power brake booster in the vehicle and tighten the power brake booster nuts to 21-28 N·m (16-21 lb-ft).
2. Connect the brake pedal push rod to the brake pedal.
3. Position the brake master cylinder on the power brake booster and tighten the brake master cylinder-to-power brake booster nuts to 21-28 N·m (16-21 lb-ft).
4. Connect the power steering right turn pressure hose, power steering left turn pressure hose and power steering return line hose to the Hydro-Boost power brake booster. Refill the system and bleed as required.

Ford Licensed Product

REMOVAL AND INSTALLATION (Continued)

Hydro-Boost Booster, F-Super Duty Chassis Cab

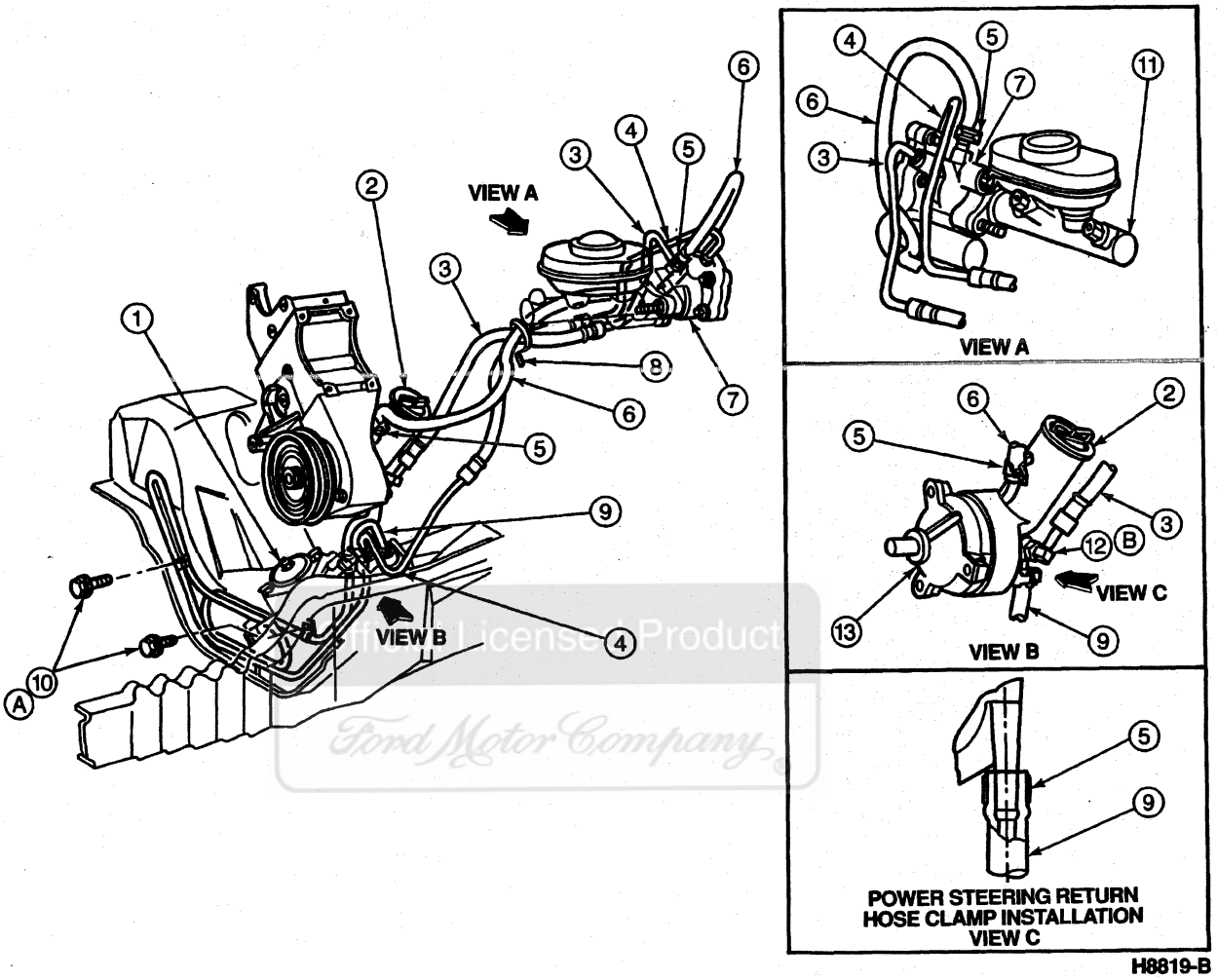

Item	Part Number	Description
1	3504	Steering Gear
2	3A697	Power Steering Oil Reservoir
3	3A717	Power Steering Right Turn Pressure Hose
4	3A714	Power Steering Left Turn Pressure Hose
5	2344	Power Steering Return Line Clamp
6	3A005	Power Steering Return Line Hose
7	2005	Power Brake Booster
8	95873-S	Bundling Strap

(Continued)

Item	Part Number	Description
9	3A713	Power Steering Return Hose (Steering Gear-to-Pump)
10	40949-S2	Screw, Power Steering Line Clamp
11	2140	Brake Master Cylinder
12	—	Power Steering Right Turn Pressure Hose Fitting (Part of 3A717)
13	3A674	Power Steering Pump
A	—	Tighten to 15-20 N·m (11-15 Lb-Ft)
B	—	Tighten to 30-40 N·m (22-30 Lb-Ft)

Ford Motor Company

REMOVAL AND INSTALLATION (Continued)

Hydro-Boost Booster, F-Super Duty Motorhome Chassis

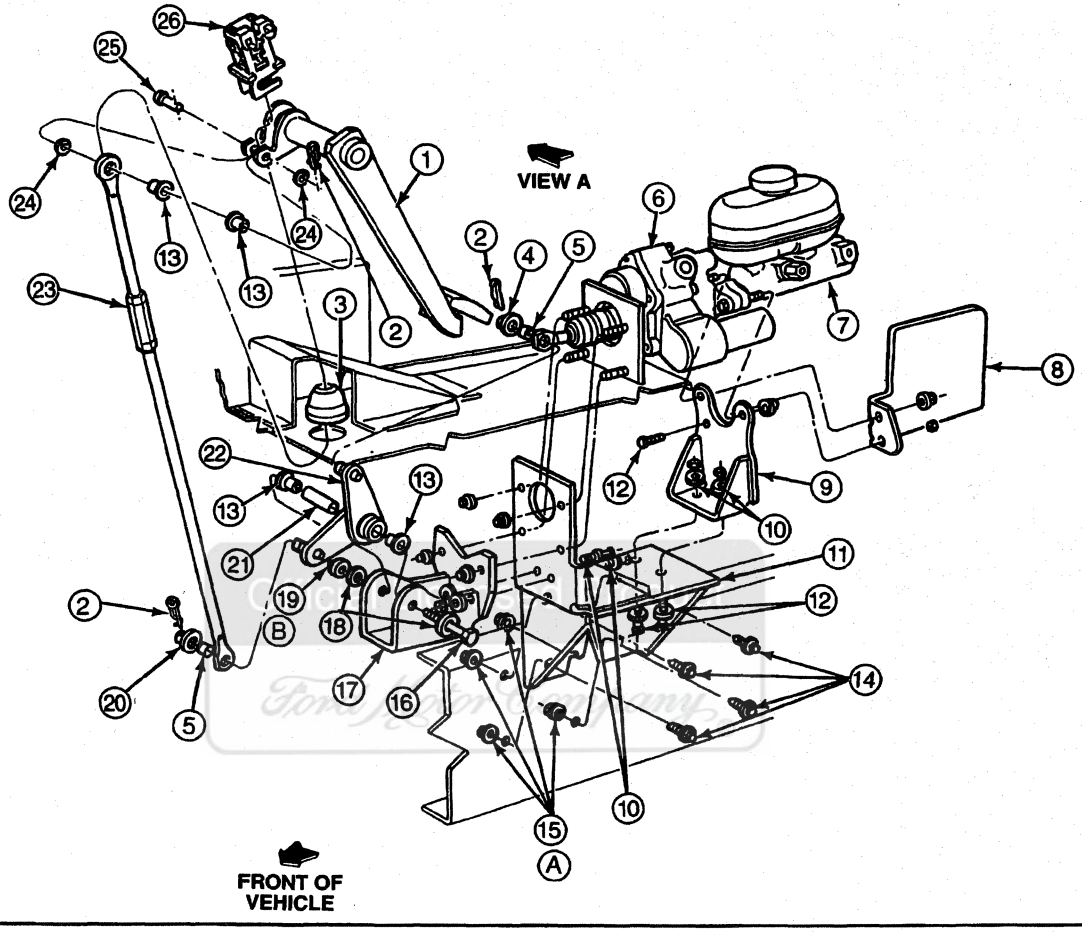

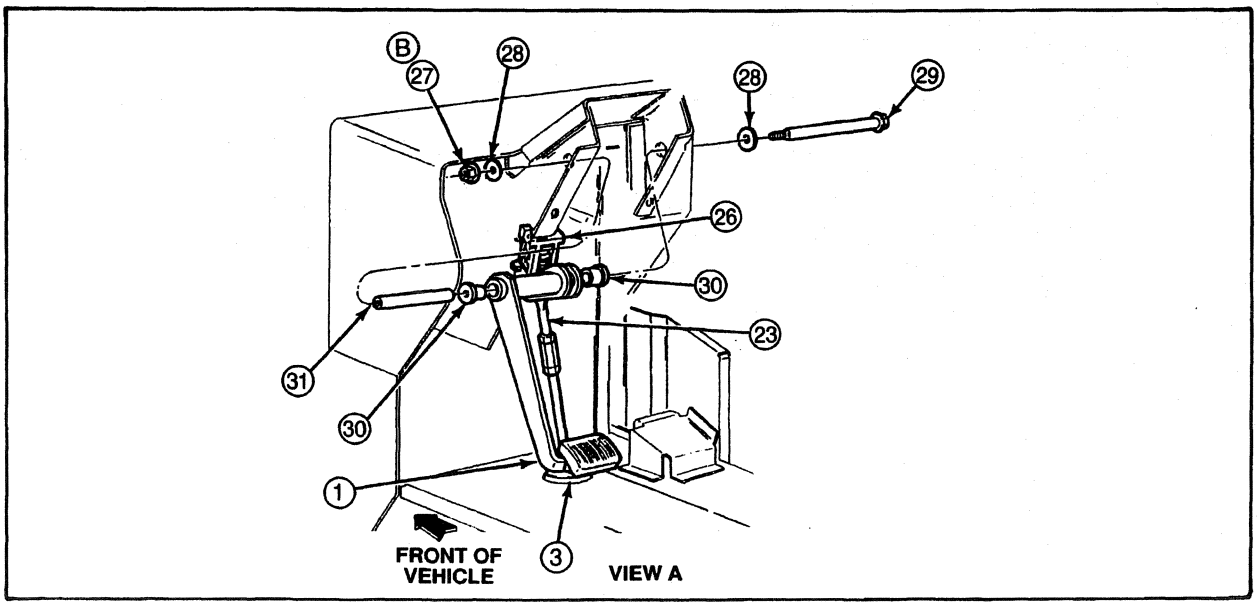

H5064-D

REMOVAL AND INSTALLATION (Continued)

Item	Part Number	Description
1	2455	Brake Pedal
2	380699	Self-Locking Pin
3	2N060	Boot
4	44880-S2	Washer
5	2474	Brake Master Cylinder Push Rod Bushing
6	2005	Power Brake Booster
7	2140	Brake Master Cylinder
8	2C022	Heat Shield
9	2031	Booster Front Mounting Bracket
10	N630088	Washer
11	2A248	Master Cylinder and Booster Bracket Holder
12	N601790	Bolt
13	2474	Brake Master Cylinder Push Rod Bushing
14	N802114-S2	Bolt
15	N800937-S2	Nut
16	389564-S190	Bolt
17	2B353	Bellcrank Bracket

(Continued)

Item	Part Number	Description
18	44878-S2	Washer
19	382400-S2	Nut
20	44880-S2	Washer
21	2B362	Bellcrank Spacer
22	2B327	Bellcrank
23	2A525	Bellcrank Rod
24	2B129	Brake Master Cylinder Push Rod Spacer
25	2462	Brake Pedal Pin
26	13480	Stoplight Switch
27	382400-S2	Nut
28	44878-S2	Washer
29	389863-S2	Bolt
30	2461	Brake and Clutch Pedal Bushing
31	7506	Clutch and Brake Pedal Pivot Shaft
A	—	Tighten to 86-104 N·m (64-76 Lb-Ft)
B	—	Tighten to 50-68 N·m (37-50 Lb-Ft)

Official Licensed Product
Ford Motor Company

Steering and Hydro-Boost Plumbing

Refer to the following illustration.

REMOVAL AND INSTALLATION (Continued)

Hydro-Boost Booster, F-Super Duty Chassis Cab

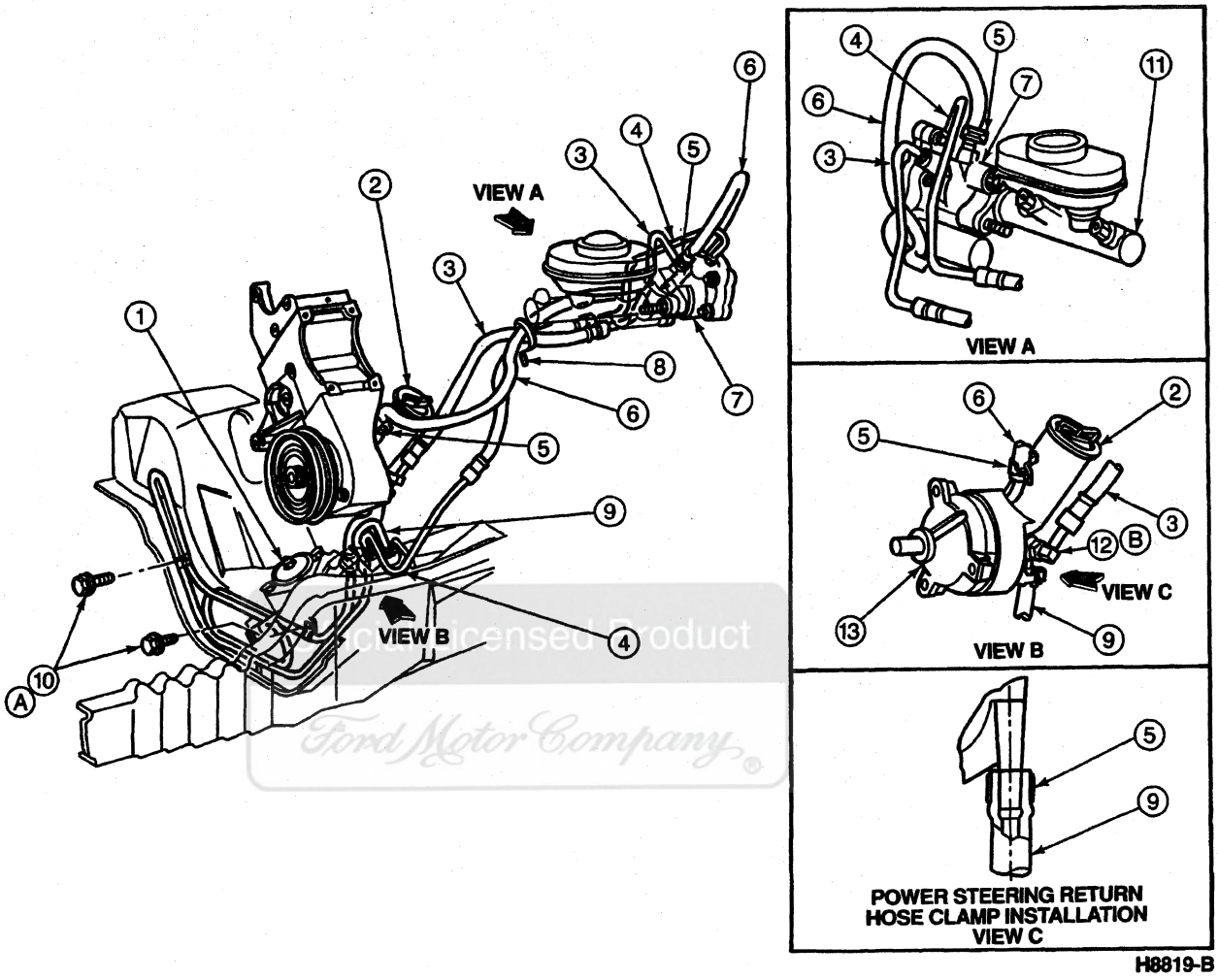

Item	Part Number	Description
1	3504	Steering Gear
2	3A697	Power Steering Oil Reservoir
3	3A717	Power Steering Right Turn Pressure Hose
4	3A714	Power Steering Left Turn Pressure Hose
5	2344	Power Steering Return Line Clamp
6	3A005	Power Steering Return Line Hose
7	2005	Power Brake Booster
8	95873-S	Bundling Strap

(Continued)

Item	Part Number	Description
9	3A713	Power Steering Return Hose (Steering Gear-to-Pump)
10	40949-S2	Screw, Power Steering Line Clamp
11	2140	Brake Master Cylinder
12	—	Power Steering Right Turn Pressure Hose Fitting (Part of 3A717)
13	3A674	Power Steering Pump
A	—	Tighten to 15-20 N·m (11-15 Lb-Ft)
B	—	Tighten to 30-40 N·m (22-30 Lb-Ft)

Licensed Product
Ford Motor Company

ADJUSTMENTS

Hydro-Boost Unit, Bleeding

NOTE: The Hydro-Boost power brake booster (2005) is generally self-bleeding, and the following procedure will normally bleed the air from the power brake booster. Normal operation of the vehicle will further remove any additional trapped air.

1. Fill the power steering oil reservoir (3A697) with Motorcraft MERCON® ATF XT-2-QDX or MERCON® equivalent. F-Super Duty Motorhome use a ZF pump and Motorcraft MERCON® fluid only.
2. Disconnect ignition coil wire (do not start the engine (6007)).
3. Crank the engine for several seconds.
4. Check the fluid level in the power steering oil reservoir, and add if necessary. Reconnect ignition coil wire.
5. Start the engine.
6. With the engine running, turn the steering wheel (3600) from stop to stop twice. Turn the engine off.
7. Depress the brake pedal (2455) several times to discharge the accumulator.
8. Repeat Steps 5 and 6.
9. If foaming occurs, stop the engine and allow the foam to dissipate.
10. Repeat Steps 5 and 6 as required, until all the air is removed from the system.

Brake Pedal Rod, Motorhome

1. Remove the self-locking pin and washer from lower end of brake pedal-to-bellcrank rod.
2. Remove lower end of the brake pedal-to-bellcrank rod and brake master cylinder push rod bushing (2474) from bellcrank pin and loosen jam nut.
3. Hold brake pedal (2455) up against rubber stop and turn the brake pedal-to-bellcrank rod until lower hole lines up with bellcrank pin.
4. Slide the brake pedal-to-bellcrank rod and brake master cylinder push rod bushing onto bellcrank pin and reinstall washer and locking pin.
5. Tighten jam nut to 50-68 N·m (37-50 lb-ft).

Official Licensed Product
Ford Motor Company

ADJUSTMENTS (Continued)

Brake Pedal Rod, F-Super Duty Motorhome Chassis

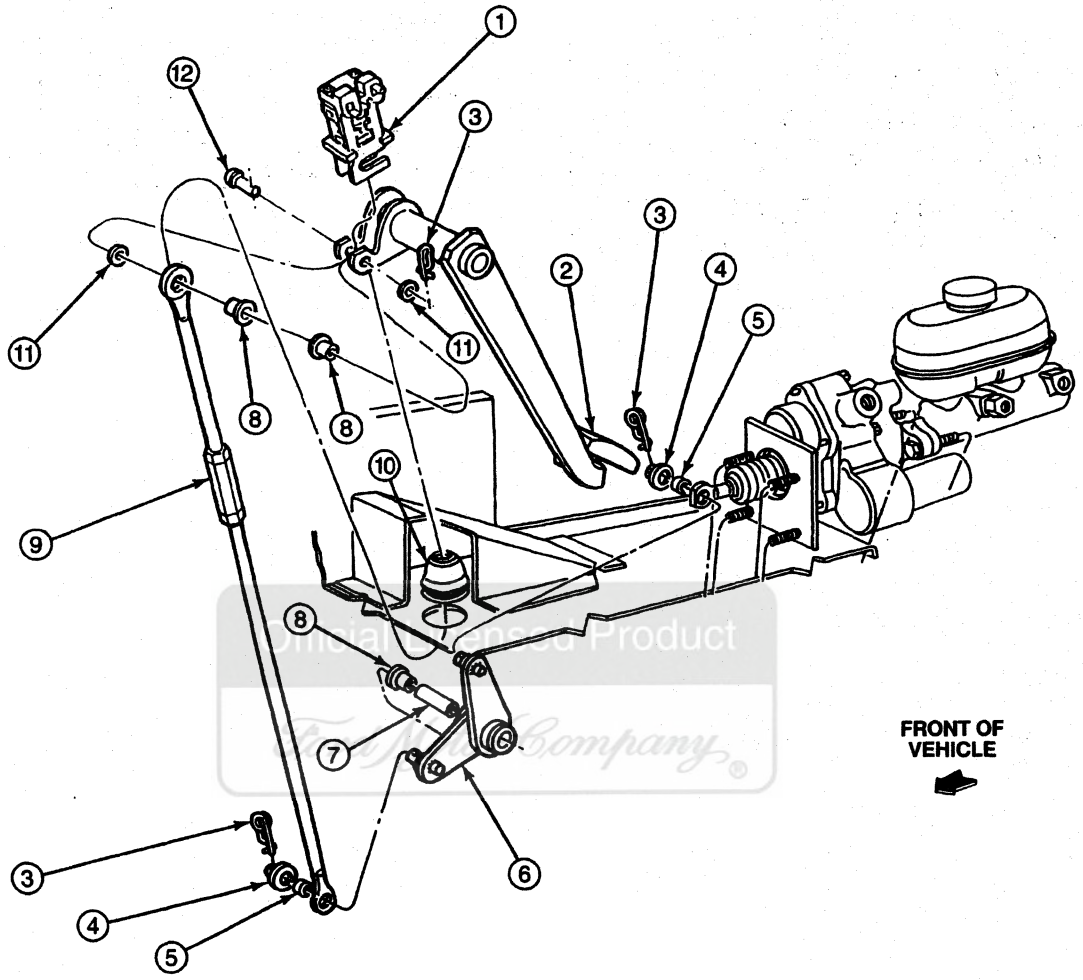

Item	Part Number	Description
1	13480	Stoplight Switch
2	2455	Brake Pedal
3	380699-S100	Self-Locking Pin
4	44880-S2	Flatwasher, 9/16-Inch
5	2474	Brake Master Cylinder Push Rod Bushing
6	2B327	Bellcrank

(Continued)

Item	Part Number	Description
7	2B362	Bellcrank Spacer
8	2474	Brake Master Cylinder Push Rod Bushing
9	2A525	Bellcrank Rod
10	2N060	Brake Rod Seal Boot
11	2B129	Brake Master Cylinder Push Rod Spacer
12	2462	Brake Pedal Pin

SPECIFICATIONS

LUBRICANT/ADHESIVE/CLEANER SPECIFICATIONS

Description	Part Number	Ford Specification
Motorcraft MERCON® ATF	XT-2-QDX	MERCON®

SPECIFICATIONS (Continued)

TORQUE SPECIFICATIONS

Description	N·m	Lb-Ft	Lb-In
Booster Mounting Nuts	21-28	16-21	—
Booster Cover to Booster Body	30-32	22-24	—
Bracket to Booster Nut	149-155	110-114	—
Master Cylinder to Booster Nuts	21-28	16-21	—
Power Steering Right Turn Pressure Hose Fitting	30-40	22-30	—

(Continued)

TORQUE SPECIFICATIONS (Cont'd)

Description	N·m	Lb-Ft	Lb-In
Power Steering Line Clamp Screw	15-20	11-15	—
Brake Pedal-to-Bellcrank Rod Jam Nut	50-68	37-50	—
Master Cylinder and Booster Bracket Holder Attaching Nuts	86-104	64-76	—

Official Licensed Product
Ford Motor Company

SECTION 06-09 Brake System, Anti-Lock, Rear

SUBJECT	PAGE
VEHICLE APPLICATION	06-09-1
DESCRIPTION AND OPERATION	
Brake Booster, Power	06-09-2
Brake Master Cylinder	06-09-2
Brake Master Cylinder and Brake Fluid Level Switch	06-09-2
Brake Sensor, Anti-Lock, Rear	06-09-3
Brake System, Anti-Lock	06-09-2
Brakes, Anti-Lock	06-09-3
Component Location	06-09-4
Control Module, Anti-Lock Electronic	06-09-3
Control Valve, Brake Pressure	06-09-2
RABS Valve	06-09-3
Stoplight Switch	06-09-3
System Diode	06-09-7
System Operation Flow Chart	06-09-7
DIAGNOSIS AND TESTING	
Anti-Lock, Rear	06-09-8
Inspection and Verification	06-09-8
Pinpoint Tests	06-09-15
Pinpoint Test A: Red BRAKE Warning Light Does Not Self Check	06-09-15
Pinpoint Test B: Red BRAKE Warning Light Stays On When Ignition Switch Key Is in RUN Position	06-09-15
Pinpoint Test C: Yellow Rear ABS Warning Light Off and Does Not Self Check	06-09-16
Pinpoint Test D: Yellow Rear ABS Warning Light Self Check OK, but Light Automatically Begins Flashing	06-09-17
Pinpoint Test E: Yellow Rear ABS Warning Light Self Check OK, but No Diagnostic Trouble Code When Diagnostics Are Started	06-09-18
Pinpoint Test F: Open RABS II Isolation Solenoid Circuit (DTC 2)	06-09-20
Pinpoint Test G: Open RABS II Dump Solenoid Circuit (DTC 3)	06-09-21
Pinpoint Test H: Open/Grounded RABS II Valve Reset Circuit (DTC 4)	06-09-22
Pinpoint Test J: Excessive Dump Solenoid Activity (DTC 5)	06-09-25
Pinpoint Test K: Erratic Speed Sensor Circuit (DTC 6)	06-09-27
Pinpoint Test L: No Isolation Solenoid During Self Check (DTC 7)	06-09-29
Pinpoint Test M: No Dump Solenoid During Self Check (DTC 8)	06-09-31
Pinpoint Test N: High Speed Sensor Resistance (DTC 9)	06-09-32
Pinpoint Test P: Low Speed Sensor Resistance (DTC 10)	06-09-33
Pinpoint Test Q: Stoplamp Circuit Always Closed (DTC 11)	06-09-35
Pinpoint Test R: Loss of Hydraulic Fluid During Anti-Lock Stop (DTC 12)	06-09-36
Pinpoint Test S: Verification Drive Test	06-09-37
Pinpoint Test T: Intermittent Diagnosis	06-09-39
Pinpoint Test U: Rear ABS and Speedometer Are Not Functioning Correctly	06-09-40
Symptom Chart	06-09-9
Electrical Schematic Reference(s)	06-09-8
REMOVAL AND INSTALLATION	
Brake Booster, Power	06-09-41
Brake Master Cylinder	06-09-41
Brake Master Cylinder With Fluid Level Switch Reservoir	06-09-41
Control Module, Anti-Lock Electronic	06-09-41
RABS Sensor	06-09-42
RABS Valve	06-09-42
Sensor Indicator, Anti-Lock Brake, Rear	06-09-43
Stoplight Switch	06-09-43
ADJUSTMENTS	
Brake Master Cylinder Reservoir Checking and Filling	06-09-43
Brake System Bleeding	06-09-43
SPECIFICATIONS	06-09-43
SPECIAL SERVICE TOOLS/EQUIPMENT	06-09-44

VEHICLE APPLICATION

F-250 Heavy Duty and F-350

DESCRIPTION AND OPERATION

Brake System, Anti-Lock

RABS I and RABS II refer to earlier and later versions of the Rear Anti-lock Brake System. A RABS I system that has previously been serviced might have had its anti-lock electronic control module (2C018) upgraded to a RABS II. In the event of uncertainty whether the system has a RABS I or RABS II anti-lock electronic control module, the anti-lock electronic control module part number can be checked to determine the type of system.

- Part number F3TF-2C018: RABS II anti-lock electronic control module
- Part number F3UF-2C018: RABS II anti-lock electronic control module
- All other part numbers are RABS I anti-lock electronic control module

CAUTION: RABS I vehicles that have been upgraded with RABS II anti-lock electronic control module will not have Keep-Alive Memory and will not be able to store codes when the vehicle is turned off.

ORIGINAL EQUIPMENT — RABS I VS. RABS II

Model Year	RABS System
87-92	RABS I
93 and Later	RABS II

The Rear Anti-Lock Brake System (RABS II) continuously monitors rear wheel speed with a RABS sensor mounted in the rear axle housing (4010). When the teeth on a RABS sensor ring, mounted on the ring gear, pass the RABS sensor pole piece, an AC voltage is induced in the sensor circuit with a frequency and amplitude proportional to the average rear wheel speed. In the event of an impending lockup condition during braking, at vehicle speeds above approximately 8 km/h (5 mph), the anti-lock electronic control module modulates hydraulic pressure to the rear wheel cylinders (2261). This inhibits rear wheel lockup.

Brake Booster, Power

The power brake booster (2005) serves to increase, through vacuum assist, the effective foot pressure on the brake pedal (2455).

The interior of a vacuum-type power brake booster is divided by a diaphragm into two separate chambers. The brake pedal-to-power brake booster push rod enters on one side, and the brake master cylinder push rod exits on the other.

The brakes can also be applied manually if the vacuum system fails.

Brake Master Cylinder

The dual brake master cylinder (2140) contains a double hydraulic cylinder with a clear plastic brake master cylinder reservoir, FLI (fluid level indicator) and primary and secondary hydraulic pistons.

Control Valve, Brake Pressure

The brake pressure control valve is an integral part of the brake master cylinder (2140). The brake pressure control valve regulates the hydraulic pressure in the rear brake system. It is located between the rear brake system inlet and outlet ports in the main valve. When the brake pedal is applied, the full brake fluid pressure passes through the brake pressure control valve to the rear brake system until the valve's split point is reached. Above its split point, the brake pressure control valve begins to reduce the hydraulic pressure to the rear brakes, creating a balanced braking condition between the front and rear wheels (1007) to minimize rear wheel lockup during hard braking.

Brake Master Cylinder and Brake Fluid Level Switch

The fluid level indicator is an integral part of the brake master cylinder reservoir. It is serviced as a part of the brake master cylinder reservoir. It consists of a float containing a magnet and a reed switch. When the fluid in the brake master cylinder reservoir (2K478) gets to a predetermined level, the magnet actuates the reed switch, causing the red brake warning lamp to light. Loss of fluid from either the primary (front) or secondary (rear) system will cause this system to actuate.

DESCRIPTION AND OPERATION (Continued)

Hydraulic Schematic

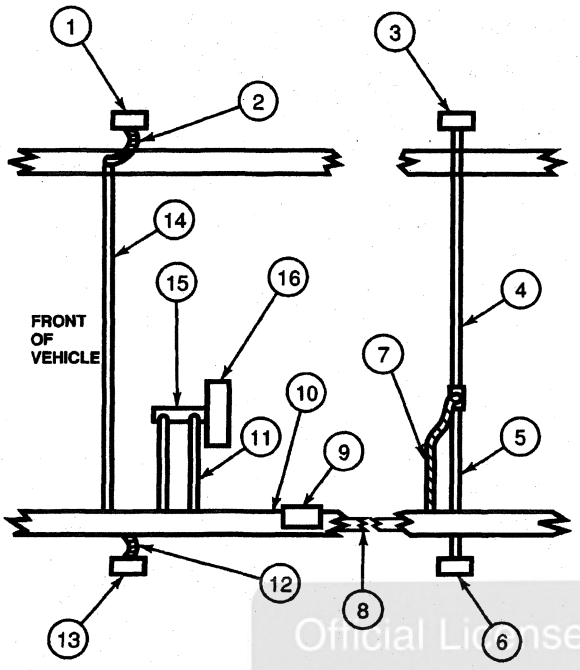

Item	Part Number	Description
1	2B120	Front Disc Brake Caliper (RH)
2	2078	Front Brake Hose (RH)
3	2261	Rear Wheel Cylinder(RH)
4	2267	Rear Brake Tube (RH)
5	2268	Rear Brake Tube (LH)
6	2262	Rear Wheel Cylinder (LH)
7	2282	Rear Brake Hose
8	2C008	RABS Valve Output Tube
9	2B373	RABS Valve
10	2234	RABS Valve Input Tube
11	2264	Front Brake Tube (LH)
12	2078	Front Brake Hose (LH)
13	2B121	Front Disc Brake Caliper (LH)
14	2263	Front Brake Tube (RH)
15	2140	Brake Master Cylinder
16	2005	Power Brake Booster

RABS Valve

The rear anti-lock brake system (RABS) valve contains an accumulator, dump solenoid and isolation valve. When activated, the components of the RABS valve work together to control pressure to the rear wheel cylinder (2261), inhibiting rear wheel lockup.

Control Module, Anti-Lock Electronic

The anti-lock electronic control module (2C018) continuously monitors rear wheel speed with a RABS sensor mounted in the rear axle housing (4010) for an impending rear wheel lockup condition during braking. Anti-lock electronic control module will modulate hydraulic pressure to rear brake cylinders to inhibit rear wheel lockup.

Brake Sensor, Anti-Lock, Rear

The rear anti-lock brake system (RABS) sensor is a coil mounted on the rear axle housing (4010). The RABS sensor ring is mounted on the ring gear in the differential and rotates close to the RABS sensor. As it rotates, the RABS sensor ring magnetically induces an AC voltage into the RABS sensor. The AC voltage is proportional to the rear wheel speed and is used by the anti-lock electronic control module (2C018) to determine the rate of deceleration of the rear wheels (1007).

Stoplight Switch

The stoplight switch (13480) is mounted on the side of the brake pedal (2455) at the rod connection for the brake booster rod. The function of the stoplight switch in the anti-lock brake system is to send a signal to the anti-lock electronic control module (2C018) when brake application will begin.

Brakes, Anti-Lock

When the brake pedal (2455) is applied, the anti-lock electronic control module (2C018) senses the drop in rear wheel speed. If the rate of deceleration is too great, indicating that wheel lockup is going to occur, the anti-lock electronic control module activates the RABS valve, causing the isolation valve to close. With the isolation valve closed, the rear wheel cylinders (2261) are isolated from the brake master cylinder (2140) and the rear brake pressure cannot increase. If the rate of deceleration is still too great, the anti-lock electronic control module will energize the dump solenoid with a series of rapid pulses to bleed off rear wheel cylinder fluid into an accumulator built into the RABS valve. This will reduce the rear wheel cylinder pressure and allow the rear wheels (1007) to spin back up to vehicle speed. Continuing under anti-lock electronic control module control, the dump and isolation solenoids will be pulsed in a manner that will keep the rear wheels rotating while still maintaining high levels of deceleration during braking.

At the end of the stop, when the operator releases the brake pedal, the isolation valve de-energizes and any fluid in the accumulator is returned to the brake master cylinder. Normal brake operation is resumed.

Official Licensed Product
Ford Motor Company

DESCRIPTION AND OPERATION (Continued)

Component Location

The RABS system consists of the following components:

- anti-lock electronic control module (2C018) located in the cab directly behind the glove compartment
- RABS valve (dual solenoid electro-hydraulic valve) located on the left frame side rail (5015) just behind the No. 1 crossmember
- RABS sensor and RABS sensor ring located in the rear axle housing (4010)
- yellow REAR ABS warning light in the instrument cluster
- RABS diagnostic connector located in the cab and clipped on the main instrument panel wiring harness about three inches below and to the right of the anti-lock electronic control module
- diode / resistor element located under the power distribution box
- RABS test connector with cap located under the hood on the left wheel well

Official Licensed Product
Ford Motor Company

DESCRIPTION AND OPERATION (Continued)

Component Location

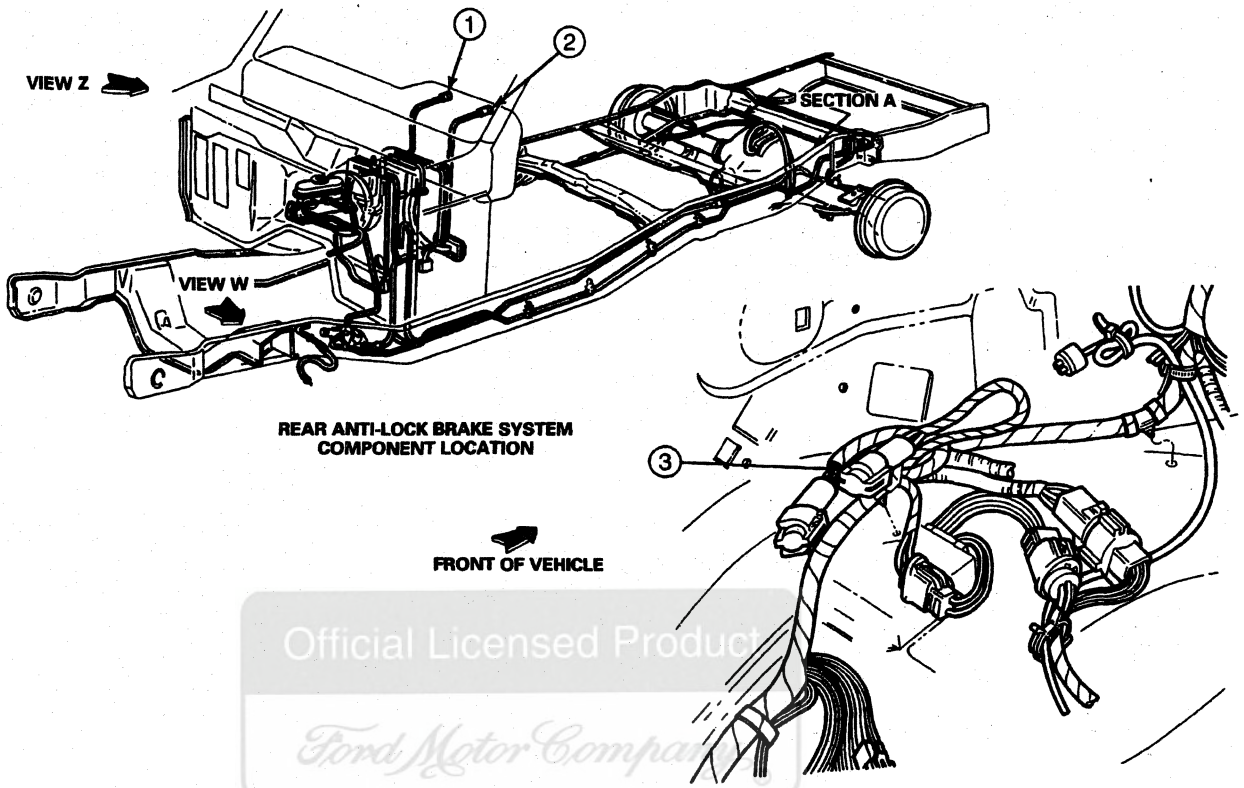

Official Licensed Product
Ford Motor Company

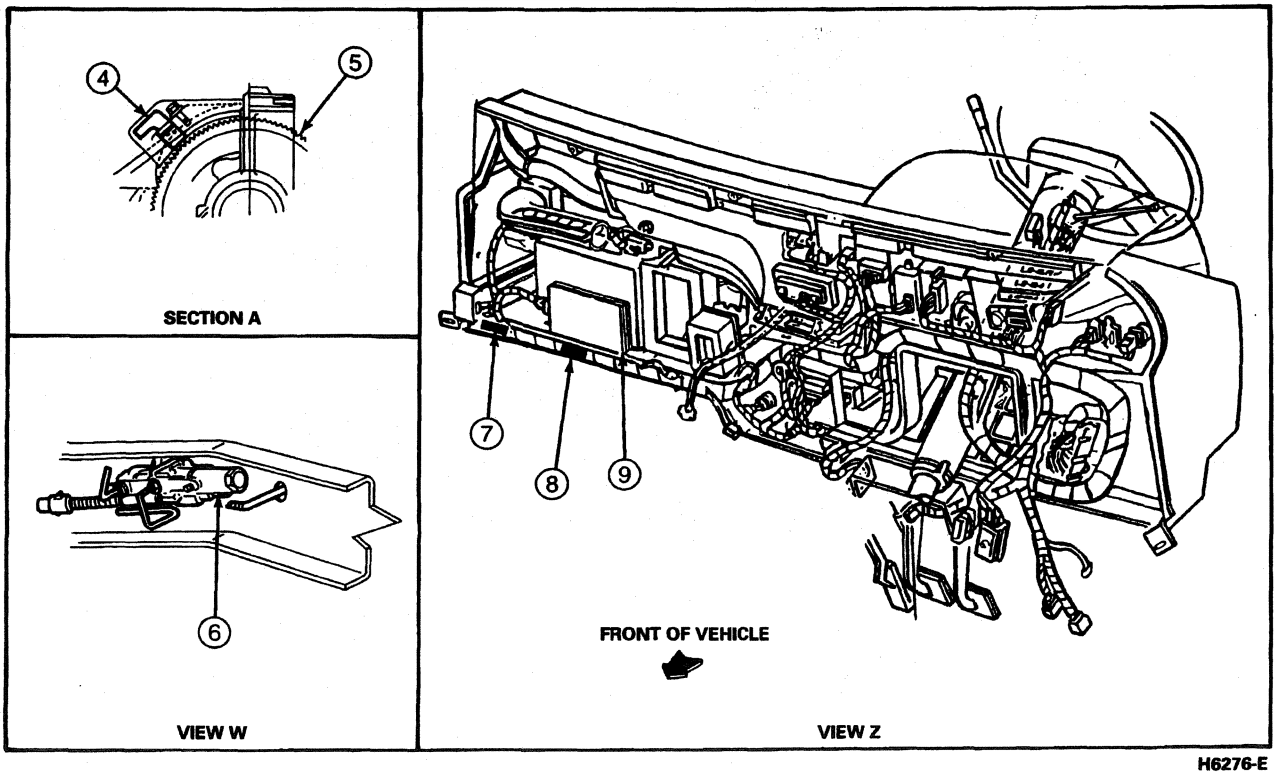

H6276-E

DESCRIPTION AND OPERATION (Continued)

Item	Part Number	Description
1	—	Yellow Rear ABS Warning Lamp (Part of 10849)
2	—	Red Brake Warning Lamp (Part of 10849)
3	—	RABS Sensor Test Connector (Part of 12A581)
4	2L373	RABS Sensor
5	4B409	RABS Sensor Ring

(Continued)

Item	Part Number	Description
6	2B373	RABS Valve
7	—	RABS KAM/Diagnostic Connector (Part of 14401)
8	—	PSOM Test Connector (Part of 14401)
9	2C018	Anti-Lock Electronic Control Module

Component Location (Continued)

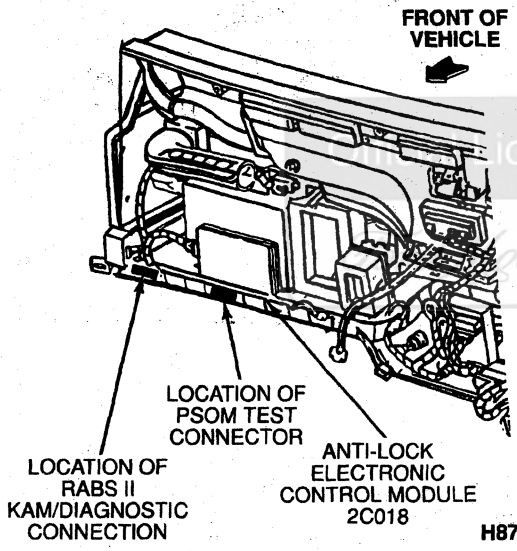

Unlicensed Product Motor Company

DESCRIPTION AND OPERATION (Continued)

System Operation Flow Chart

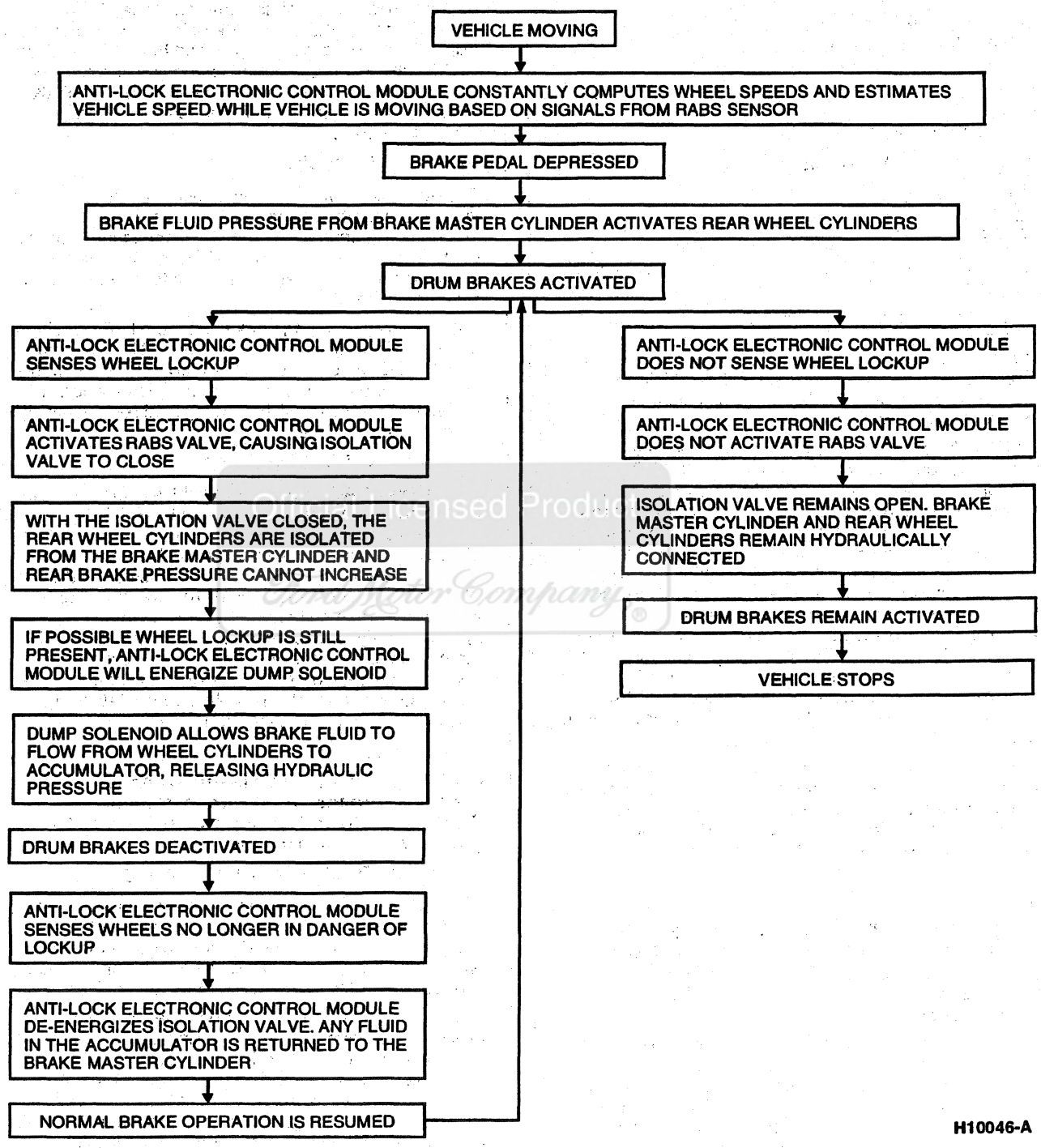

Official Licensed Product
Chilton Book Company

System Diode

The system diode is actually a diode / resistor element. The diode / resistor element prevents a false Code 12 from being set when the parking brake is applied.

DIAGNOSIS AND TESTING

Electrical Schematic Reference(s)

Refer to Electrical and Vacuum Troubleshooting Manual, Cell 42, Rear Anti-Lock Brakes (RABS) for schematic and connector information.

Anti-Lock, Rear

Inspection and Verification

System Pre-Check

NOTE: It is important that this procedure be performed first. Failure to do so can result in incorrect diagnosis of problem, wasted time and improper replacement of components.

The System Pre-Check is used to screen a vehicle for relatively simple diagnostic service, such as loose connectors, blown fuses, etc. However, the System Pre-Check is also used to prepare the vehicle for further diagnostics. In addition, warning light concerns are dealt with in this check.

NOTE: The anti-lock electronic control module (2C018) is commonly referred to as the RABS I module or, on later models, the RABS II module. This service procedure is written for RABS II systems (as opposed to RABS I systems). The RABS II system is standard for F-250 Heavy Duty and F-350 vehicles. In the event that you are not sure if you have a RABS I or a RABS II system in the vehicle, check the anti-lock electronic control module part number. Anti-lock electronic control module part numbers will begin with either: F3TF-2C018- or F3UF-2C018-. All other part numbers should be considered to be a RABS I anti-lock electronic control module. If the vehicle has a RABS I anti-lock electronic control module, refer to the service manual for that model year vehicle.

The RABS II uses both the red BRAKE and yellow REAR ABS instrument panel warning lights to alert the driver to a system malfunction. Both lights must be working properly to assist in concern diagnosis. The steps listed below must be followed prior to beginning the RABS II diagnostic procedure.

Vehicle Setup

WARNING: PLACE BLOCKS BEHIND THE REAR WHEELS (1007) AND IN FRONT OF THE FRONT WHEELS TO PREVENT THE VEHICLE FROM MOVING WHILE THE SYSTEM PRE-CHECK IS BEING DONE.

For 4-wheel drive vehicles, shift into 2-wheel drive. Drive the vehicle to a level area, and place the shift lever in PARK for automatic transmissions (7003) and NEUTRAL for manual transmissions. Turn the ignition off, set the parking brake and turn on the running lamps. Place blocks behind the wheels.

Continue with the System Pre-Check.

Warning Lamp Indicators

The red BRAKE warning light is constantly monitored by the anti-lock electronic control module. If the red light illuminates, the anti-lock electronic control module will disable the RABS II system and turn on the yellow RABS light. For this reason, diagnosing and resolving any base brake concerns illuminating the red BRAKE warning light will, in most cases, resolve a perceived RABS II concern.

Brake Light Self Check

The red BRAKE warning light is used to indicate a low fluid level condition or parking brake applied condition. To check this light, insert the key in the ignition switch (11572) and turn it to the START position. The light should glow in this position. If it fails to glow, go to the Symptom Chart.

Allow the key to spring back from the START position to the RUN position. At this time the BRAKE warning light should turn off. If it does not turn off, recheck the parking brake to make sure it is fully disengaged. In the event that the BRAKE warning light remains on, go to the Symptom Chart.

Rear Anti-Lock Warning Light

The yellow REAR ABS warning light is used to indicate a malfunction and a deactivation of the RABS II system. To check this light, first follow the procedure above for red brake warning light self check, and allow the key to spring back from START position to the RUN position. The yellow REAR ABS warning light should perform a self-check by glowing for approximately two seconds and then turning off. If it turns back on and does not flash, then a system concern has been detected. Refer to On-Board Diagnostics, Diagnostic Trouble Codes, Retrieving. If it fails to glow, go to the Symptom Chart.

On-Board Diagnostics

CAUTION: Care must be taken to connect only the black/orange stripe wire to ground. Connecting the red mating connector wire to ground will result in a blown fuse.

Diagnostic Trouble Codes, Retrieving

Verify the key is in the RUN position (engine does not need to be running). Next, locate the black RABS II diagnostic connector. The diagnostic connector has two mating halves (one of which has a black/orange wire connected to it). Disconnect the two halves.

Attach one end of a jumper wire to the black with orange stripe wire side of the diagnostic connector. Momentarily ground the other end of the jumper wire by connecting it to a good chassis ground for 1-2 seconds. Grounding this wire should start the yellow REAR ABS warning light flashing. If grounding this wire does not start the yellow REAR ABS warning light flashing, go to the Symptom Chart.

DIAGNOSIS AND TESTING (Continued)

The code consists of a number of short flashes and ends with a long flash. Count the short flashes and include the following long flash in the count to obtain the code number. For example, three short flashes followed by one long flash indicates diagnostic trouble Code 4. The code will continue to repeat itself until the key is turned off. It is recommended that the code be verified by reading it several times. This code will be used later for system service instructions. It should be written down for future use. Diagnostic trouble code 16 indicates that the anti-lock electronic control module detects normal system operation.

Diagnostic Trouble Codes, Erasing

The last step of the System Pre-Check always includes clearing the Keep-Alive Memory (KAM). To do this, simply turn off the ignition while the diagnostic connector halves are separated as described in the procedures for obtaining the diagnostic trouble code above, after which the diagnostic connector should be reassembled to provide KAM power to the anti-lock electronic control module. If at this time a valid code has been obtained, go to the appropriate pinpoint test for that code.

Symptom Chart

Refer to the Electrical and Vacuum Troubleshooting Manual for the connector numbers in the pinpoint tests.

NOTE: Use Rotunda 88 Digital Multimeter 105-00053 or equivalent to perform electrical pinpoint tests.

There are times when a customer concern will not cause the yellow REAR ABS warning light to illuminate or a code to be stored.

The symptom chart is intended to give the technician a starting point in resolving these types of concerns. The chart also describes conditions that will illuminate the yellow RABS light.

Please note that both the red BRAKE warning light diagnosis procedure and test drive are required prior to performing the tests in this section. Failure to perform these procedures will greatly diminish the effectiveness of this method of diagnosis.

REAR BRAKE ANTI-LOCK CONTROL

Condition	Possible Source	Action
• Red Brake Warning Light Does Not Self Check	• Open brake warning light bulb (red). • Open power fuse. • Open Circuit 640 (R/Y), 977 (P/W), 512 (T/LG), 531 (DG/Y). • Open resistor/diode circuit. • Unseated fluid level switch connector. • Defective ignition switch.	• GO to Pinpoint Test A.
• Red Brake Warning Light Stays On When Key Is in RUN Position	• Ground short on Circuit 977. • Ground short on Circuit 162. • Damaged parking brake switch. • Damaged low vacuum switch.	• GO to Pinpoint Test B.
• Yellow Rear ABS Warning Light Off and Does Not Self Check	• Open fuse Circuit 640 (R/Y). • Missing power to rear ABS warning light (open Circuit 640 [R/Y]). • Open Circuit 603 (DG). • Burned-out yellow REAR ABS warning light. • Terminal backout in the anti-lock electronic control module harness connector at Pin 7. • Harness connector not fully mated with anti-lock electronic control module. • Defective anti-lock electronic control module. • Open anti-lock electronic control module ground (Circuit 570 [BK/W] or Circuit 530 [LG/Y]).	• GO to Pinpoint Test C.
• Yellow Rear ABS Warning Light Self Check OK, but Light Automatically Begins Flashing	• Intermittent anti-lock electronic control module. • Intermittent anti-lock electronic control module ground circuit. • Intermittent yellow rear ABS warning light circuit. • Blown Keep-Alive Memory fuse.	• GO to Pinpoint Test D.

Official Licensed Product

DIAGNOSIS AND TESTING (Continued)

REAR BRAKE ANTI-LOCK CONTROL (Continued)

Condition	Possible Source	Action
• Yellow Rear ABS Warning Light Self Check OK, but No Diagnostic Trouble Code When Diagnostics Are Started	• Burned-out brake taillights. • Missing anti-lock electronic control module power (Circuit 601 [LB/PK] and associated fuse). • Shorted yellow rear ABS warning light circuit (Circuit 603 [DG]). • Incorrect anti-lock electronic control module (RABS I vs. RABS II).	• GO to Pinpoint Test E.
• Open RABS II Isolation Solenoid Circuit (DTC 2)	• Terminal backout in the anti-lock electronic control module harness connector at Pin 13. • Terminal backout in the RABS valve harness connector at Pin 1. • Bulkhead connector (between engine compartment and instrument panel) terminal backout or loose connection. • Anti-lock electronic control module or RABS valve connectors not fully mated with component. • Intermittent open circuit in Circuit 599 (PK/LG).	• GO to Pinpoint Test F.
• Open RABS II Dump Solenoid Circuit (DTC 3)	• Terminal backout in the anti-lock electronic control module harness connector at Pin 8 or 14. • Terminal backout in the RABS valve harness connector at Pin 4. • Bulkhead connector (between engine compartment and instrument panel) terminal backout or loose connection. • Anti-lock electronic control module or RABS valve connectors not fully mated with component. • Intermittent open circuit in Circuit 664 (Y/LG).	• GO to Pinpoint Test G.
• Open/Grounded RABS II Valve Reset Circuit (DTC 4)	• Terminal backout in the anti-lock electronic control module harness connector at Pin 6. • Terminal backout in the RABS valve harness connector at Pins 2 or 3. • Bulkhead connector (between engine compartment and instrument panel) terminal backout or loose connection. • Anti-lock electronic control module or RABS valve connectors not fully mated with component. • Intermittent open or open circuit in Circuits 535 (LB/R) or 274 (BK/W). • Intermittent short or short circuit in Circuit 535 (LB/R). • Defective RABS valve.	• GO to Pinpoint Test H.
• Excessive Dump Solenoid Activity (DTC 5)	• Parking brake drag. • Worn or damaged 4x4 switch (4x4 only). • Rear brake assembly grabby or hanging up. • Connector corrosion or contamination. • Intermittent open circuit in Circuit 210 (LB). • Pierced wire insulation to battery power (4x4 only).	• GO to Pinpoint Test J.

Official Product Ford Motor Company

DIAGNOSIS AND TESTING (Continued)

REAR BRAKE ANTI-LOCK CONTROL (Continued)

Condition	Possible Source	Action
• Erratic Speed Sensor Circuit (DTC 6)	• Terminal backout in the anti-lock electronic control module harness connector at Pins 3 and 10. • Terminal backout in the RABS sensor harness connector at Pins A and B. • Bulkhead connector (between engine compartment and instrument panel) terminal backout or loose connection. • Anti-lock electronic control module or RABS sensor connectors not fully mated with component. • Intermittent open / short circuit in Circuits 519 (LG/BK) or 523 (R/PK). • Damaged RABS sensor (possibly metal shavings on pole piece). • Damaged RABS sensor ring (possibly teeth missing).	• GO to Pinpoint Test K.
• No Isolation Solenoid During Self Check (DTC 7)	• Anti-lock electronic control module fuse blown or internal open circuit. • Shorted isolation solenoid internal to the RABS valve. • Intermittent short or shorted circuit in Circuit 599 (PK/LG). • Contamination or bent Pins 1 and 3 of RABS valve connector shorting together.	• GO to Pinpoint Test L.
• No Dump Solenoid During Self Check (DTC 8)	• Anti-lock electronic control module internal fuse blown or internal open circuit. • Shorted dump solenoid internal to the RABS valve. • Intermittent short or shorted circuit in Circuit 664 (Y/LG). • Bulkhead connector between engine compartment and instrument panel terminals shorted.	• GO to Pinpoint Test M.
• High Speed Sensor Resistance (DTC 9)	• Terminal backout in the anti-lock electronic control module harness connector at Pin 3 or Pin 10. • Terminal backout in the RABS sensor harness connector at Pins A or B. • Anti-lock electronic control module or RABS sensor connectors not fully mated with component. • Open or intermittent open circuits in Circuit 519 (LG/BK) or 523 (R/PK).	• GO to Pinpoint Test N.
• Low Speed Sensor Resistance (DTC 10)	• Short between anti-lock electronic control module harness connector Pin 3 and Pin 10. • Short between RABS sensor connector Pins A and B. • Bulkhead connector (between engine compartment and instrument panel) terminals shorted together. • Intermittent short circuit in Circuits 519 (LG/BK) or 523 (R/PK).	• GO to Pinpoint Test P.

Official Ford Publication

DIAGNOSIS AND TESTING (Continued)

REAR BRAKE ANTI-LOCK CONTROL (Continued)

Condition	Possible Source	Action
• Stoplamp Circuit Always Closed (DTC 11)	• Terminal backout in the anti-lock electronic control module harness connector at Pin 11. • Missing (burned-out) stoplamps. All stoplamps must be missing or burned out to cause a Code 11. • An intermittent / continuous open in Circuit 511 (LG). This open would be between anti-lock electronic control module connector Pin 11 and the stoplight switch. • Worn or damaged stoplight switch.	• GO to Pinpoint Test Q.
• Loss of Hydraulic Fluid During Anti-Lock Stop (DTC 12)	• Low level in brake master cylinder reservoir. • Fluid leaks in vehicle brake system. • Worn or damaged fluid level switch, or fluid level switch circuit shorted to ground. • Brake master cylinder reservoir float that sticks in the bottom of brake master cylinder reservoir or does not float. • Failed diode / resistor element in stoplamp circuit. • Damaged ignition switch. • Ground short in Circuits 512 (T/LG) or 531 (DG/Y). • Damaged anti-lock electronic control module.	• GO to Pinpoint Test R.
• Yellow Rear ABS Warning Light Flashes 13 Times When Retrieving Diagnostic Trouble Codes (Code 13)	• Anti-lock electronic control module is damaged.	• REPLACE anti-lock electronic control module. • GO to Pinpoint Test S. TEST drive vehicle.
• Yellow Rear ABS Warning Light Flashes 16 Times When Retrieving Diagnostic Trouble Codes (Code 16)	• No codes stored in anti-lock electronic control module.	• STOP. Rear anti-lock brake system functioning properly.
• Intermittent Problem Suspected	• Intermittent voltage to anti-lock electronic control module. • Less than 11 volts to anti-lock electronic control module. • Intermittent connections at speed sensor, RABS valve, anti-lock electronic control module.	• GO to Pinpoint Test T.
• Rear ABS and Speedometer Are Not Functioning Correctly	• No signal from RABS sensor. • Defective RABS sensor.	• GO to Pinpoint Test U.

Official Ford Product

DIAGNOSIS AND TESTING (Continued)

REAR BRAKE ANTI-LOCK CONTROL (Continued)

Condition	Possible Source	Action
• Unwarranted RABS Activity	• Metal chips on RABS sensor pole piece.	• REFER to Pinpoint Test K, Step K6 only.
	• Gap between RABS sensor and RABS sensor ring is too large (greater than 1.14 mm [0.045 inch]).	• REFER to Pinpoint Test K, Steps K11 and K12 only.
	• Missing or damaged RABS sensor ring teeth.	• REFER to Pinpoint Test K, Step K13 only.
	• RABS sensor/sensor ring interference — gap is too small (less than 0.127 mm [0.005 inch]).	• REFER to Pinpoint Test K, Step K13 only.
	• Intermittent open or shorted RABS sensor circuit.	• PERFORM intermittent diagnosis for Circuits 519 (LG/BK) and anti-lock electronic control module and RABS sensor.
	• Intermittent open RABS sensor circuit at intermediate connections, especially bulkhead.	• PERFORM intermittent diagnosis for Circuit 519 (LG/BK) and 523 (R/PK) at intermediate connectors.
	• Chafed wire insulation or pinched wire.	• INSPECT wiring harness from rear axle assembly to frame side rail for chafing or rub marks.
	• Rear brake adjustment too tight.	• REFER to Section 06-00.
	• Linings are "grabby."	• REFER to Section 06-00.
• One or Both Rear Wheels Lock Up	• Damaged RABS valve reset switch.	• REFER to Pinpoint Test H, Steps H11 and H14 only.
	• Leaky isolation valve.	• REFER to Pinpoint Test H, Step H13 only.
	• RABS sensor air gap too large.	• REFER to Pinpoint Test K, Step K11 only.
	• RABS sensor/sensor ring assembly does not produce sufficient output.	• REFER to Pinpoint Test K, Step K10 only. PERFORM intermittent diagnosis for Circuit 519 (LG/BK) and 523 (R/PK) between anti-lock electronic control module and RABS sensor. PERFORM intermittent diagnosis for Circuit 519 (LG/BK) and 523 (R/PK) at intermediate connectors.
	• Brake related concern: — damp or contaminated rear brake shoe linings — stuck/leaking rear wheel cylinder — rear brake adjusted too tight	• REFER to Section 06-00.
	• Hung-up parking brake.	• REFER to Section 06-00.
	• Hubs engaged although shift lever is in 4x2 position.	• REFER to Section 07-07A in the Powertrain, Drivetrain Manual.
	• Faulty 4x4 indicator switch or short to 12 v in 4x4 Circuit 210 (LB).	• REFER to Pinpoint Test J, Steps J3 and J5 only.
	• Stoplamp input to anti-lock electronic control module not present.	• REFER to Pinpoint Test Q, Steps Q1-Q4 only.
	• Stoplamps inoperative.	• REFER to Section 17-01.

Official Licensed Product
Ford Motor Company

DIAGNOSIS AND TESTING (Continued)

REAR BRAKE ANTI-LOCK CONTROL (Continued)

Condition	Possible Source	Action
• Hard or Soft Brake Pedal	• Stuck shut isolation valve (hard).	• REFER to Pinpoint Test H, Step H14 only.
	• Leaky dump valve (soft).	• REFER to Pinpoint Test H, Step H13 only.
	• Leaky isolation valve during RABS stop (soft).	• REFER to Pinpoint Test J, Step J9 only.
	• Stoplamps always on while driving.	• REFER to Pinpoint Test Q, Steps Q1-Q4 only.
	• Hydraulic leak in rear brake tube or rear brake hose, fitting, brake master cylinder, rear wheel cylinder, or front disc brake caliper.	• REFER to Section 06-00.
	• Air in brake system.	• REFER to Section 06-00.
	• Brake-related concern: — little or no vacuum boost — stuck or inoperative rear wheel cylinder or front disc brake caliper — pinched or crimped rear brake tube or rear brake hose	• REFER to Section 06-00.
• Lack of Deceleration During Medium/Hard Brake Applications	• Leaky dump valve.	• REFER to Pinpoint Test H, Step H13.
	• Stuck shut isolation valve.	• REFER to Pinpoint Test H, Step H14 only.
	• Short/open in frame or instrument panel harness (Circuits 519 [LG/BK] or Circuit 523 [R/PK]). — At anti-lock electronic control module connector (Pins 3 and 10). — At RABS sensor connector. — At bulkhead or other interconnection. — Pinched wire or worn insulation due to improper routing. — RABS sensor test connector (in engine compartment).	• REFER to Pinpoint Test K, Steps K1-K5 only.
	• Metal chips on RABS sensor.	• REFER to Pinpoint Test K, Step K6 only.
	• Borderline high RABS sensor to RABS sensor ring air gap, excessive RABS sensor ring radial runout, damaged or missing RABS sensor ring teeth.	• REFER to Pinpoint Test K, Steps K11 and K12 only.
	• Low vacuum switch inoperative (diesel only).	• REFER to Section 06-00.
	• Hydraulic leak in brake line tubing or rear brake hose, fitting, brake master cylinder, rear wheel cylinder, or front disc brake caliper.	• REFER to Section 06-00.
	• Air in brake system.	• REFER to Section 06-00.
	• Brake related concern: — Little or no vacuum boost. — Stuck or inoperative wheel cylinder or caliper. — Pinched or crimped rear brake hose or brake line tubing. — Ineffective brake shoe or pad linings.	• REFER to Section 06-00.

Official Publication Product Ford Motor Company

DIAGNOSIS AND TESTING (Continued)

Pinpoint Tests

Pinpoint Test A: Red BRAKE Warning Light Does Not Self Check

Description

If the red BRAKE warning light does not turn on when the key is in the START position, service the brake warning bulb system as required. The most likely cause of a nonfunctioning red BRAKE warning light is a burned-out bulb or an open fuse.

Possible Contributing Base Brake Component/Vehicle Wiring Concerns

- Open brake warning light bulb (RED)
- Open power fuse
- Open Circuit 640 (R/Y), 977 (P/W), 512 (T/LG), 531 (DG/Y)
- Open resistor/diode circuit
- Unseated fluid level switch connector
- Defective ignition switch

PINPOINT TEST A: RED BRAKE WARNING LIGHT DOES NOT SELF CHECK

Test Step		Result	Action to Take
A1	RED BRAKE WARNING LIGHT/FUSE		
	• Key to RUN. • Apply parking brake. • Observe BRAKE warning light. • **Does the BRAKE warning light function?**	Yes ▶	RELEASE parking brake. GO to **A2**.
		No ▶	SERVICE brake warning light circuit. CHECK for open fuse. CHECK for burned-out bulb or open Circuit 640 (R/Y). REPEAT System Pre-Check.
A2	CHECK FOR CORRODED FLUID LEVEL SWITCH CONNECTOR PINS		
	• Remove fluid level switch connector C170 located on brake master cylinder. • Inspect both halves of fluid level switch connector for corrosion or connector pin backout. • **Are the connections clean and secure?**	Yes ▶	GO to **A3**.
		No ▶	SERVICE/REPLACE connector as needed. REPEAT System Pre-Check.
A3	CHECK FOR UNSEATED CONNECTOR		
	• Firmly reconnect fluid level switch connector C170 located on brake master cylinder. • Key to START. • Observe BRAKE warning light. • **Does the BRAKE warning light function?**	Yes ▶	Condition is resolved. REPEAT System Pre-Check.
		No ▶	GO to **A4**.
A4	DIODE RESISTOR ELEMENT/CIRCUIT 531		
	• Disconnect fluid level switch connector C170. • Connect jumper wire from diode/resistor side of Circuit 531 (DG/Y) to known chassis ground. • Observe BRAKE warning light. • **Does the BRAKE warning light function?**	Yes ▶	LEAVE fluid level switch disconnected. GO to **A5**.
		No ▶	SERVICE open Circuit 977 (P/W), 531 (DG/Y) or open diode/resistor element. REPEAT System Pre-Check.
A5	MASTER CYLINDER FLUID LEVEL SWITCH		
	• Connect jumper wire from Circuit 531 (DG/Y) to Circuit 512 (T/LG). • Key to START. • Observe BRAKE warning light. • **Does the BRAKE warning light function?**	Yes ▶	Fluid level switch is defective. REFER to Section 06-06. REPEAT System Pre-Check.
		No ▶	Open in Circuit 512 (T/LG) or defective ignition switch. SERVICE/REPLACE and REPEAT System Pre-Check.

Pinpoint Test B: Red BRAKE Warning Light Stays On When Ignition Switch Key Is in RUN Position

Description

Red BRAKE light on with ignition switch on and parking brake released.

Possible Contributing Component/Vehicle Wiring Faults

- Ground short on Circuit 977 (P/W)
- Ground short on Circuit 162 (LG/R)
- Damaged parking brake switch
- Damaged low vacuum switch (diesel only)

DIAGNOSIS AND TESTING (Continued)

PINPOINT TEST B: RED BRAKE WARNING LIGHT STAYS ON WHEN KEY IS IN RUN POSITION

	Test Step	Result ▶	Action to Take
B1	CHECK IF BOTH WARNING LIGHTS ARE ON		
	• Disengage parking brake. • Key to RUN. • **Do both the red BRAKE warning light and yellow RABS light come on?**	Yes ▶	PULL code. DTC 4: GO to Pinpoint Test H. DTC 12: GO to Pinpoint Test R.
		No ▶	GO to **B2**.
B2	CHECK PARKING BRAKE SWITCH		
	• Key off. • Disconnect parking brake switch from harness connector. • Key to RUN. • **Does the red BRAKE warning light remain on?**	Yes ▶	Diesel engines: GO to **B3**. Gas engines: SERVICE ground short in Circuits 977 or 162. REPEAT System Pre-Check.
		No ▶	REPLACE parking brake switch. REPEAT System Pre-Check.
B3	CHECK LOW VACUUM SWITCH (DIESEL ONLY)		
	• Key off. • Disconnect low vacuum switch from harness connector. • Key to RUN. • **Does the red BRAKE warning light remain on?**	Yes ▶	SERVICE ground short in Circuits 977 or 162. REPEAT System Pre-Check.
		No ▶	REPLACE parking brake switch. REPEAT System Pre-Check.

Pinpoint Test C: Yellow Rear ABS Warning Light Off and Does Not Self Check

Description

The anti-lock electronic control module will turn on the yellow rear ABS warning light for 1-2 seconds after the key has been turned from the OFF to the RUN position. If REAR ABS warning light fails to flash, it can be caused by a burned-out bulb or an open fuse to Circuit 640 (R/Y). An open in Circuit 603 (DG) will also keep the light from flashing.

Possible Contributing Base Brake Component/Vehicle Wiring Concerns

- Open fuse Circuit 640 (R/Y)
- Missing power to REAR ABS warning light (open Circuit 640 [R/Y])
- Open Circuit 603 (DG)
- Burned-out yellow REAR ABS warning light bulb
- Terminal backout in the anti-lock electronic control module harness connector at Pin 7
- Harness connector not fully mated with anti-lock electronic control module
- Damaged anti-lock electronic control module
- Open REAR ABS ground (Circuit 530 [LG/Y])

PINPOINT TEST C: YELLOW REAR ABS WARNING LIGHT OFF AND DOES NOT SELF CHECK

	Test Step	Result ▶	Action to Take
C1	REAR ABS LIGHT 10 AMP FUSE		
	• Remove and inspect REAR ABS light 10-amp fuse. • **Is the fuse blown?**	Yes ▶	CHECK for short to ground between fuse panel and warning lights. SERVICE short and REPLACE 10-amp fuse. REPEAT System Pre-Check.
		No ▶	REINSTALL fuse and GO to **C2**.
C2	ANTI-LOCK ELECTRONIC CONTROL MODULE HARNESS CONNECTOR		
	• Check to make sure harness connector C277 is fully plugged into anti-lock electronic control module. • **Are connections secure?**	Yes ▶	GO to **C3**.
		No ▶	CONNECT harness to anti-lock electronic control module. REPEAT System Pre-Check.

DIAGNOSIS AND TESTING (Continued)

PINPOINT TEST C: YELLOW REAR ABS WARNING LIGHT OFF AND DOES NOT SELF CHECK (Continued)

Test Step		Result ▶	Action to Take
C3	ANTI-LOCK ELECTRONIC CONTROL MODULE GROUND		
	NOTE: When checking resistance in the RABS system, always disconnect the battery to starter relay cable. Improper resistance may occur with the vehicle battery connected. • Check for good anti-lock electronic control module ground: — Disconnect battery to starter relay cable. — Remove harness connector C277 from anti-lock electronic control module. — Set ohmmeter on the 200 ohm scale. — Check for resistance between anti-lock electronic control module harness connector C277, Pin 4 and chassis ground. • **Is resistance less than 1.0 ohm?**	Yes ▶ No ▶	RECONNECT battery ground cable. GO to **C4**. CHECK for open in anti-lock electronic control module ground wire. CHECK for loose, dirty or broken connector pins. SERVICE as necessary. REPEAT System Pre-Check.
C4	REAR ABS WARNING LIGHT POWER		
	• Check for voltage to REAR ABS warning light: — Set multimeter on 20 VDC scale position. — Key to RUN. — Check voltage between harness connector C277, Pin 7 and a known good chassis ground. • **Are 9 volts present?**	Yes ▶ No ▶	REPLACE anti-lock electronic control module. REPEAT System Pre-Check. GO to **C5**.
C5	POWER TO REAR ABS WARNING LIGHT FUSE		
	• Check for voltage to fuse. — Set multimeter to 20 VDC scale. — Key to RUN. — Check voltage between panel fuse connector and known good chassis ground. • **Are 9 volts present?**	Yes ▶ No ▶	GO to **C6**. SERVICE fuse panel or vehicle electrical system. REPEAT System Pre-Check.
C6	REAR ABS WARNING LIGHT BULB		
	• Check REAR ABS warning light bulb. • **Is bulb OK?**	Yes ▶ No ▶	SERVICE open between rear ABS warning light fuse and Pin 7 of the harness connector C277. REPEAT System Pre-Check. REPLACE bulb. REPEAT System Pre-Check.

Ford Motor Company Special Licensed Product

Pinpoint Test D: Yellow Rear ABS Warning Light Self Check OK, but Light Automatically Begins Flashing

Description

The yellow rear ABS warning light will automatically begin a flash-out sequence if the diagnostic line Circuit 571 (BK/O) or 483 (R) is shorted to ground. This will result in a blown fuse for the Keep-Alive Memory power for the anti-lock electronic control module. An open Keep-Alive Memory (KAM) fuse is most likely caused by a grounded diagnostic connector.

Possible Contributing Base Brake Component/Vehicle Wiring Concerns

- Intermittent anti-lock electronic control module power circuit
- Intermittent anti-lock electronic control module ground circuit
- Intermittent rear ABS warning light circuit
- Blown Keep-Alive Memory fuse

DIAGNOSIS AND TESTING (Continued)

PINPOINT TEST D: YELLOW REAR ABS WARNING LIGHT SELF CHECK OK, BUT LIGHT AUTOMATICALLY BEGINS FLASHING

	Test Step	Result ▶	Action to Take
D1	OBSERVE REAR ABS WARNING LIGHT FOR FLASH SEQUENCE		
	• Observe REAR ABS warning light and determine if the flashing is a diagnostic trouble code (one or more short pulses followed by one long pulse). • **Is the flash sequence a diagnostic trouble code?**	Yes ▶	INSPECT Circuits 571 (BK/O) and 483 (R) for short to ground. SERVICE circuit and REPLACE RABS KAM fuse. (SEE owner guide.) REPEAT System Pre-Check.
		No ▶	GO to **D2**.
D2	INTERMITTENT POWER TO ANTI-LOCK ELECTRONIC CONTROL MODULE		
	• Remove the harness connector C277 from the anti-lock electronic control module. • Set multimeter to 20 VDC scale. • Key to RUN. • Shake the instrument panel harness while measuring battery voltage between Pin 1, Pin 9 and chassis ground. • **Is voltage steady and greater than 9 volts?**	Yes ▶	GO to **D3**.
		No ▶	SERVICE Circuit 601 (LB/PK). REPEAT System Pre-Check.
D3	DAMAGED ANTI-LOCK ELECTRONIC CONTROL MODULE GROUND		
	• Disconnect the battery ground cable. • Set the multimeter on the 200 ohm scale. • Shake the anti-lock electronic control module harness while reading the resistance between Pin 4 and chassis ground. • **Is resistance less than 1 ohm and steady?**	Yes ▶	REPLACE anti-lock electronic control module. RECONNECT the battery ground cable. REPEAT System Pre-Check.
		No ▶	SERVICE poor ground in Circuit 530 (LG/Y) or Circuit 570 (BK/W). RECONNECT the battery ground cable. REPEAT System Pre-Check.

Licensed Product Ford Motor Company

Pinpoint Test E: Yellow Rear ABS Warning Light Self Check OK, but No Diagnostic Trouble Code When Diagnostics Are Started

Description

The yellow RABS warning light should automatically begin a flash-out sequence if the diagnostic connector is shorted to ground for at least one second. This flashout sequence can be observed by watching the yellow REAR ABS warning light. There are a few conditions that will prevent the flashout from occurring. These must be resolved before continuing the service.

Possible Contributing Base Brake Component/Vehicle Wiring Concerns

- Burned-out brake rear lights
- Missing anti-lock electronic control module power (Circuit 601 [LB/PK] and associated fuse)
- Shorted yellow rear ABS warning light circuit (Circuit 603 [DG])
- Incorrect anti-lock electronic control module (RABS I vs. RABS II)

CAUTION: RABS I vehicles that have been upgraded with RABS II anti-lock electronic control module will not have Keep-Alive Memory and will not be able to store codes when the vehicle is turned off.

NOTE: A RABS I system that has previously been serviced might have had its anti-lock electronic control module upgraded to a RABS II. In the event that you are uncertain whether you have a RABS I or RABS II anti-lock electronic control module, check the anti-lock electronic control module part number to be certain of the type of system you have.

- Part number F3TF-2C018: RABS II anti-lock electronic control module
- Part number F3UF-2C018: RABS II anti-lock electronic control module
- All other part numbers are RABS I anti-lock electronic control module

DIAGNOSIS AND TESTING (Continued)

PINPOINT TEST E: YELLOW REAR ABS WARNING LIGHT SELF CHECK OK, BUT NO DIAGNOSTIC TROUBLE CODE WHEN DIAGNOSTICS ARE STARTED

	Test Step	Result ▶	Action to Take
E1	DETERMINE IF SYSTEM IS RABS I OR RABS II		
	• Determine if the ABS system is a RABS I or a RABS II system. • **Is anti-lock electronic control module RABS II?**	Yes ▶ No ▶	GO to **E2**. Anti-lock electronic control module is a RABS I. REFER to appropriate year service manual (1987-1992). This manual does not cover RABS I anti-lock brake system.
E2	CHECK FOR BURNED-OUT REAR BRAKE LIGHTS		
	• Press on brake pedal while observing rear brake lights. • **Do the brake lights function properly?**	Yes ▶ No ▶	GO to **E3**. SERVICE burned-out bulbs or open Circuit 511 (LG). REPEAT System Pre-Check.
E3	CHECK FOR LOSS OF BRAKE INPUT TO ANTI-LOCK ELECTRONIC CONTROL MODULE		
	• Remove the harness connector C277 from the anti-lock electronic control module. Check for terminal backout. • Set multimeter to 20 VDC range. • Press on brake pedal hard enough to turn on rear brake lights. • Measure voltage from harness connector C277, Pin 11 to chassis ground while brake pedal is pressed. • **Is voltage greater than 9 volts?**	Yes ▶ No ▶	LEAVE anti-lock electronic control module disconnected. GO to **E4**. SERVICE open in Circuit 511 (LG). RECONNECT anti-lock electronic control module. REPEAT System Pre-Check.
E4	CHECK POWER TO THE ANTI-LOCK ELECTRONIC CONTROL MODULE		
	• Key to RUN. • Measure the voltage between RABS harness connector C277, Pin 1 (or Pin 9) and chassis ground. • **Is voltage greater than 9 volts?**	Yes ▶ No ▶	LEAVE anti-lock electronic control module disconnected. GO to **E5**. SERVICE Circuit 601 (LB/PK) or associated fuse. RECONNECT anti-lock electronic control module. REPEAT System Pre-Check.
E5	CHECK FOR SHORTS IN ANTI-LOCK ELECTRONIC CONTROL MODULE HARNESS CONNECTOR		
	• With same setup as in Step E4, observe REAR ABS warning light. • **Is the REAR ABS warning light on?**	Yes ▶ No ▶	CHECK for short to ground in Circuit 603 (DG). RECONNECT the anti-lock electronic control module. REPEAT System Pre-Check. LEAVE anti-lock electronic control module disconnected. GO to **E6**.
E6	CHECK CIRCUIT 571 (BK/O) CONTINUITY		
	• Set the multimeter to the 200 ohm scale. • Disconnect the RABS diagnostic connector C159 from its mating half (Circuits 571 [BK/O] and 483 [R]). • Measure resistance of Circuit 571 (BK/O) from diagnostic connector C159 to anti-lock electronic control module harness connector C277, Pin 12. • **Is the resistance less than 20 ohms?**	Yes ▶ No ▶	REPLACE anti-lock electronic control module. SERVICE Circuit 571 (BK/O). RECONNECT anti-lock electronic control module. REPEAT System Pre-Check.

Licensed Product Ford Motor Company

DIAGNOSIS AND TESTING (Continued)

Pinpoint Test F: Open RABS II Isolation Solenoid Circuit (DTC 2)

Description

Code 2 is generated when the anti-lock electronic control module detects an open circuit in Circuit 599 (PK/LG). The code can also be generated by a failed isolation solenoid (open coil) internal to the RABS valve or a failed internal anti-lock electronic control module circuit.

Possible Contributing Base Brake Component/Vehicle Wiring Concerns

- Terminal backout in the anti-lock electronic control module harness connector at Pin 13
- Terminal backout in the RABS valve harness connector at Pin 1
- Bulkhead connector (between engine compartment and instrument panel) terminal backout or loose connection
- Anti-lock electronic control module or RABS valve connectors not fully mated with component
- Intermittent open in Circuit 599 (PK/LG)

PINPOINT TEST F: OPEN RABS II ISOLATION SOLENOID CIRCUIT (DTC 2)

	Test Step	Result ▶	Action to Take
F1	CHECK YELLOW RABS WARNING LAMP		
	• Key off. • Locate and disconnect the diagnostic connector C159 from its mating half (Circuits 571 [BK/O] and 483 [R]). • Reconnect diagnostic connector C159. • Key on. • **Does the yellow RABS warning lamp come on?**	Yes ▶ No ▶	Hard fault. GO to **F2**. Intermittent fault. GO to Pinpoint Test T and PROCEED with intermittent diagnosis for all affected circuits.
F2	VERIFY INTEGRITY OF ANTI-LOCK ELECTRONIC CONTROL MODULE HARNESS CONNECTION		
	• Key off. • Disconnect battery ground cable. • Remove the anti-lock electronic control module harness connector C277. • Inspect module Pin 13. • Pull gently on Pin 13 (PK/LG) wire just behind the harness connector C277. • **Is connector clean and secure?**	Yes ▶ No ▶	LEAVE anti-lock electronic control module connector C277 disconnected. GO to **F3**. SERVICE terminal or connector as needed. If component side is not serviceable, REPLACE anti-lock electronic control module. GO to **F6**.
F3	VERIFY INTEGRITY OF RABS VALVE CONNECTION		
	• Remove RABS valve connector C158. • Inspect RABS valve component connector C158 for contamination or loose terminals. • Pull gently on Pin 1 (PK/LG) just behind the harness connector C158. • **Is terminal clean and secure?**	Yes ▶ No ▶	LEAVE RABS valve harness connector C158 disconnected. GO to **F4**. SERVICE terminal or connector as needed. If component side is not serviceable, REPLACE RABS valve. GO to **F6**.
F4	CHECK FOR CONTINUITY ALONG HARNESS CIRCUIT 599 (PK/LG)		
	• Verify multimeter is on 200 ohm scale. • Measure resistance between anti-lock electronic control module harness connector C277, Pin 13 (PK/LG) and RABS valve component side connector harness connector C158, Pin 1. • **Is resistance greater than 10 ohms?**	Yes ▶ No ▶	FIND and SERVICE open circuit along Circuit 599 (PK/LG). GO to **F6**. Circuit is not open. GO to **F5**.
F5	CHECK FOR OPEN RABS VALVE ISOLATION SOLENOID		
	• Verify multimeter is on 200 ohm scale. • Measure resistance between RABS valve component side connector Pins 1 (PK/LG) and 3 (BK/W). • **Is resistance greater than 6 ohms?**	Yes ▶ No ▶	Open circuit in RABS valve is indicated. REPLACE RABS valve. GO to **F6**. REPLACE the anti-lock electronic control module. GO to **F6**.

Ford Motor Company

DIAGNOSIS AND TESTING (Continued)

PINPOINT TEST F: OPEN RABS II ISOLATION SOLENOID CIRCUIT (DTC 2) (Continued)

Test Step		Result ▶	Action to Take
F6	CLEAR CODE/PULL CODE		
	• Key off. • Reconnect battery ground cable. • Verify all connectors are installed. • Locate and disconnect the diagnostic connector C159 from its mating half (Circuits 571 [BK/O] and 483 [R]). • Key to RUN. • Begin diagnostic trouble code flashout by connecting Circuit 571 (BK/O) to a chassis ground for at least 1 second. • **Is original code obtained?**	Yes ▶	If all steps are complete, GO to Pinpoint Test T. If all steps are not complete, RETURN to last step completed and CONTINUE.
		No ▶	GO to pinpoint test for corresponding code. If DTC 16 is obtained, GO to Pinpoint Test S.

Pinpoint Test G: Open RABS II Dump Solenoid Circuit (DTC 3)

Description

Code 3 is generated when the anti-lock electronic control module detects an open in Circuit 664 (Y/LG) or 274 (BK/W). The code can also be generated by a failed dump solenoid (open coil) internal to the RABS valve or a failed internal anti-lock electronic control module circuit.

Possible Contributing Base Brake Component/Vehicle Wiring Concerns

- Terminal backout in the anti-lock electronic control module harness connector at Pin 8 or 14
- Terminal backout in the RABS valve harness connector at Pin 2
- Bulkhead connector (between engine compartment and instrument panel) terminal backout or loose connection
- Anti-lock electronic control module or RABS valve connectors not fully mated with component
- Intermittent open in Circuit 664 (Y/LG)

Official Licensed Product Ford Motor Company

PINPOINT TEST G: OPEN RABS II DUMP SOLENOID CIRCUIT (DTC 3)

Test Step		Result ▶	Action to Take
G1	CHECK YELLOW RABS WARNING LAMP		
	• Key off. • Locate and disconnect the diagnostic connector C159 from its mating half (Circuits 571 [BK/O] and 483 [R]). • Reconnect diagnostic connector C159. • Key on. • **Does the yellow RABS warning lamp come on?**	Yes ▶	Hard fault. GO to **G2**.
		No ▶	Intermittent fault. GO to Pinpoint Test T and PROCEED with intermittent diagnosis for all affected circuits.
G2	VERIFY INTEGRITY OF ANTI-LOCK ELECTRONIC CONTROL MODULE CONNECTION		
	• Key off. • Disconnect battery ground cable. • Remove the anti-lock electronic control module connector C277. • Inspect anti-lock electronic control module Pins 8 and 14. • Pull gently on each wire just behind Pins 8 and 14 on harness connector C277. • **Are connections clean and secure?**	Yes ▶	LEAVE anti-lock electronic control module connector C277 disconnected. GO to **G3**.
		No ▶	SERVICE terminal or connector as needed. If component side is not serviceable, REPLACE anti-lock electronic control module. GO to **G6**.
G3	VERIFY INTEGRITY OF RABS VALVE CONNECTION		
	• Remove RABS valve connector C158. • Inspect RABS valve connector C158, Pin 2. • Gently pull on Pin 2 wire just behind RABS harness connector C277. • **Are connections clean and secure?**	Yes ▶	LEAVE RABS valve connector C158 disconnected. GO to **G4**.
		No ▶	SERVICE terminal or connector as needed. If not serviceable, REPLACE RABS valve. GO to **G6**.

DIAGNOSIS AND TESTING (Continued)

PINPOINT TEST G: OPEN RABS II DUMP SOLENOID CIRCUIT (DTC 3) (Continued)

Test Step		Result ▶	Action to Take
G4	CHECK FOR CONTINUITY ALONG HARNESS CIRCUIT 664 (Y/LG) FROM ANTI-LOCK ELECTRONIC CONTROL MODULE CONNECTOR C277, PINS 8 AND 14		
	• Set multimeter on 200 ohm scale. • Measure resistance between anti-lock electronic control module harness connector C277, Pin 8 and RABS valve harness connector C158, Pin 2. • Measure resistance between anti-lock electronic control module harness connector C277, Pin 14 and RABS valve harness connector C158, Pin 2. • **Is resistance greater than 10 ohms for either measurement?**	Yes ▶ No ▶	FIND and SERVICE open along Circuit 664 (Y/LG). GO to **G6**. Circuit is not open. GO to **G5**.
G5	CHECK FOR OPEN RABS DUMP VALVE SOLENOID		
	• Verify multimeter is on 200 ohm scale. • Measure resistance between RABS valve Pins 2 and 3. • **Is resistance greater than 3 ohms?**	Yes ▶ No ▶	Open circuit in RABS valve is indicated. REPLACE RABS valve. GO to **G6**. REPLACE the anti-lock electronic control module. GO to **G6**.
G6	CLEAR CODE/PULL CODE		
	• Turn key to OFF. • Reconnect battery ground cable. • Verify all connectors are installed. • Locate and disconnect the diagnostic connector C159 from its mating half (Circuits 571 [BK/O] and 483 [R]). • Key to ON. • Begin diagnostic trouble code flashout by connecting Circuit 571 (BK/O) to a chassis ground for at least 1 second. • **Is original code obtained?**	Yes ▶ No ▶	If all steps are complete, GO to Pinpoint Test T. If all steps are not complete, RETURN to the last step completed and CONTINUE. GO to Pinpoint Test for corresponding code. If DTC 16 is obtained, GO to Pinpoint Test S.

Pinpoint Test H: Open/Grounded RABS II Valve Reset Circuit (DTC 4)

Description

Code 4 is generated when the anti-lock electronic control module detects a short (less than 10 k ohms) in Circuit 535 (LB/R). This can indicate a short or open in the valve reset switch circuit or a hydraulic leak into dump section of the RABS valve.

Possible Contributing Base Brake Component/Vehicle Wiring Concerns

- Terminal backout in the anti-lock electronic control module harness connector at Pin 6
- Terminal backout in the RABS valve harness connector at Pins 4 or 3
- Bulkhead connector (between engine compartment and instrument panel) terminal backout or loose connection
- Anti-lock electronic control module or RABS valve connectors not fully mated with component
- Open or intermittent open in Circuit 535 (LB/R) or Circuit 274 (BK/W)
- Short or intermittent short in Circuit 535 (LB/R)
- Defective RABS valve
- Worn or damaged anti-lock electronic control module

PINPOINT TEST H: OPEN/GROUNDED RABS II VALVE RESET CIRCUIT (DTC 4)

Test Step		Result ▶	Action to Take
H1	CHECK WARNING LIGHTS		
	• Key off. • Locate and disconnect the diagnostic connector C159 from its mating half (Circuits 571 [BK/O] and 483 [R]). • Reconnect diagnostic connector C159. • Key on. • **Do both the red BRAKE and yellow RABS lamps come on?**	Yes ▶ No ▶	Hard fault. GO to **H2**. Intermittent fault. GO to Pinpoint Test T and PROCEED with intermittent diagnosis for all affected circuits.

DIAGNOSIS AND TESTING (Continued)

PINPOINT TEST H: OPEN/GROUNDED RABS II VALVE RESET CIRCUIT (DTC 4) (Continued)

Test Step		Result	Action to Take
H2	VERIFY INTEGRITY OF ANTI-LOCK ELECTRONIC CONTROL MODULE CONNECTION		
	• Key to off. • Disconnect battery ground cable. • Inspect anti-lock electronic control module component connector C277, Pin 6. • Inspect anti-lock electronic control module harness connector C277, Pin 6. • Pull gently on Pin 6 wire just behind the anti-lock electronic control module harness connector C277. • **Are connections clean and secure?**	Yes ▶ No ▶	LEAVE anti-lock electronic control module connector C277 disconnected. GO to **H3**. SERVICE terminal or connector as needed. If component side is not serviceable, REPLACE anti-lock electronic control module. GO to **H9**.
H3	VERIFY INTEGRITY OF RABS VALVE CONNECTION		
	• Remove RABS valve connector C158. • Inspect RABS valve component connector C158, Pins 4 and 3. • Inspect RABS valve harness connector C158, Pins 4 and 3. • Pull gently on Pin 4 wire just behind the RABS valve harness connector C158. • Pull gently on Pin 3 just behind the RABS valve harness connector C158. • **Are connections clean and secure?**	Yes ▶ No ▶	LEAVE RABS valve connector C158 disconnected. GO to **H4**. SERVICE terminal or connector as needed. If component side is not serviceable, REPLACE RABS valve. GO to **H9**.
H4	CHECK FOR CONTINUITY ALONG ANTI-LOCK ELECTRONIC CONTROL MODULE HARNESS CIRCUIT 535 (LB/R)		
	• Set multimeter on 200 ohm scale. • Measure resistance between anti-lock electronic control module harness connector C277, Pin 6 and RABS valve harness connector C158, Pin 4. • **Is resistance greater than 10 ohms?**	Yes ▶ No ▶	FIND and SERVICE open along Circuit 535 (LB/R). GO to **H9**. Circuit is not open. GO to **H5**.
H5	CHECK FOR CONTINUITY ALONG GROUND CIRCUIT 274 (BK/W)		
	• Set multimeter on 200 ohm scale. • Measure resistance between RABS valve harness connector C158, Pin 3 and negative battery post. • **Is resistance 3 ohms or less?**	Yes ▶ No ▶	GO to **H6**. FIND and SERVICE open along Circuit 274 (BK/W). GO to **H9**.
H6	CHECK FOR SHORT ALONG ANTI-LOCK ELECTRONIC CONTROL MODULE HARNESS CIRCUIT 535 (LB/R)		
	• Set multimeter on 200 ohm scale. • Measure resistance between anti-lock electronic control module harness connector C277, Pin 6 and chassis ground. • **Is resistance greater than 12 ohms?**	Yes ▶ No ▶	Circuit is not shorted. GO to **H7**. FIND and SERVICE ground short along Circuit 535 (LB/R). GO to **H9**.
H7	CHECK FOR CLOSED RABS VALVE RESET SWITCH		
	• Verify multimeter is on 200 k ohm scale. • Measure resistance between RABS valve connector C158, Pin 4 and RABS valve body. • **Is resistance greater than 10 k ohms?**	Yes ▶ No ▶	Reset switch is not closed. GO to **H8**. Shorted circuit in RABS valve is indicated. REPLACE RABS valve. GO to **H9**.
H8	CHECK RESISTANCE BETWEEN VALVE SWITCH AND VALVE COMMON		
	• Verify multimeter is on 200 k ohm scale. • Measure resistance between RABS valve Pins 4 and 3. • **Is resistance greater than 10 k ohms?**	Yes ▶ No ▶	REPLACE anti-lock electronic control module. GO to **H9**. Shorted in RABS valve is indicated. REPLACE RABS valve. GO to **H9**.

Official Licensed Product Motorcraft Company

DIAGNOSIS AND TESTING (Continued)

PINPOINT TEST H: OPEN/GROUNDED RABS II VALVE RESET CIRCUIT (DTC 4) (Continued)

Test Step		Result	Action to Take
H9	CLEAR CODE/PULL CODE		
	• Key off. • Reconnect battery ground cable. • Verify all connectors are installed. • Locate and disconnect the diagnostic connector C159 from its mating half (Circuits 571 [BK/O] and 483 [R]). • Key to RUN. Begin diagnostic trouble code flashout by connecting Circuit 571 (BK/O) to a chassis ground for at least 1 second. • **Was original code obtained?**	Yes ▶ No ▶	GO to **H10**. GO to the pinpoint test for the corresponding code. If DTC 16 is obtained, GO to Pinpoint Test S.
H10	VERIFY PROPER WARNING LIGHT PROVEOUT		
	• Start the vehicle and observe the REAR ABS warning light for proper warning light proveout. • **Does the REAR ABS warning light prove out properly?**	Yes ▶ No ▶	GO to **H11**. GO to Pinpoint Test C.
H11	VALVE RESET SWITCH CHECK		
	• Drive the vehicle at approximately 16 km/h (10 mph) on dry pavement. **CAUTION: Do not exceed 16 km/h (10 mph) to prevent flat-spotting of tires.** • Press on brake pedal hard enough to lock all four wheels. • After the vehicle has stopped, place the vehicle in NEUTRAL or PARK and take foot off the brake pedal. • Wait 30 seconds. • **Does the RABS warning light come on?**	Yes ▶ No ▶	Key off. GO to **H13**. Key off. GO to **H12**.
H12	RABS HYDRAULIC VALVE LEAK TEST		
	NOTE: The condition is similar to the master cylinder bypass condition. It is important that the brake pedal be quickly and forcefully applied to rule out master cylinder bypass as the cause if a hydraulic leak is detected. Typically, master cylinder bypass occurs only at low line pressures. • Press hard on the brake pedal and keep pressure on the brake pedal for 30 seconds. • While keeping pressure on the brake, monitor the height of the brake pedal. • **Does the brake pedal drop slowly toward the floor?**	Yes ▶ No ▶	REPLACE RABS valve. GO to Pinpoint Test S to verify concern is resolved. GO to **H14**.
H13	OBTAIN DIAGNOSTIC TROUBLE CODE		
	• Obtain diagnostic trouble code. • **Is Code 4 obtained?**	Yes ▶ No ▶ ▶ ▶	REPLACE RABS valve. GO to Pinpoint Test S to verify concern is resolved. DTC 16 is obtained. Inconsistent result. If RABS warning light did come on in **H11**, then a diagnostic trouble code other than Code 16 should be stored. REPEAT **H13** and verify Code 16 is obtained. DTC obtained is NOT Code 4. GO to the pinpoint test for the code obtained. No code is obtained. GO to Pinpoint Test E.

Official Licensed Product Ford Motor Company

DIAGNOSIS AND TESTING (Continued)

PINPOINT TEST H: OPEN/GROUNDED RABS II VALVE RESET CIRCUIT (DTC 4) (Continued)

Test Step		Result ▶	Action to Take
H14	BLOCKED ISOLATION ORIFICE		
	• Disconnect anti-lock electronic control module harness connector C277. • Raise the vehicle on a hoist far enough to allow all wheels to spin freely. • Verify that the vehicle is in 4x2 mode and the hubs are unlocked (4x4 only). • Start the vehicle and allow rear wheels to spin at idle for at least 30 seconds. • Apply the brake pedal with the force of a normal traffic stop. • **Do the rear wheels react uncharacteristically slowly or continue to spin?**	Yes ▶ No ▶	RECONNECT anti-lock electronic control module. REPLACE RABS valve. GO to Pinpoint Test S to verify concern is resolved. RABS valve is OK. RECONNECT anti-lock electronic control module. GO to Pinpoint Test T.

Pinpoint Test J: Excessive Dump Solenoid Activity (DTC 5)

Description

Code 5 is generated when the maximum number of allowable dump pulses has been exceeded. The system will only recognize this condition during an anti-lock stop in 2WD mode. The code can be caused by a blocked RABS dump valve orifice, a stuck dump valve, an open circuit in Circuit 210 (LB), a worn or damaged 4x4 transfer case that causes the vehicle to remain in 4x4 after 4x2 has been selected, or mechanical problems in the rear brake system (rear brakes might lock).

Possible Contributing Base Brake Component/Vehicle Wiring Concerns

- Parking brake drag
- Worn or damaged 4x4 switch
- Rear brake assembly grabby or hanging up
- Connector corrosion or contamination
- Intermittent open in Circuit 210 (LB)
- Pierced wire insulation to battery power (4x4 only)

PINPOINT TEST J: EXCESSIVE DUMP SOLENOID ACTIVITY (DTC 5)

Test Step		Result ▶	Action to Take
J1	CHECK YELLOW RABS WARNING LAMP		
	• Key off. • Locate and disconnect the diagnostic connector C159 from its mating half (Circuits 571 [BK/O] and 483 [R]). • Reconnect diagnostic connector C159. • Key on. • **Does the yellow RABS warning lamp come on?**	Yes ▶ No ▶	Hard fault. GO to **J2**. Intermittent fault. GO to Pinpoint Test T and PROCEED with intermittent diagnosis for all affected circuits.
J2	DRIVE STATUS		
	• **Was vehicle in 4-wheel drive when code occurred?**	Yes ▶ No ▶	GO to **J3**. GO to **J4**.
J3	CHECK FOR INCORRECT 4WD SWITCH SIGNAL, OR SHORT TO POWER TO ANTI-LOCK ELECTRONIC CONTROL MODULE		
	• Disconnect anti-lock electronic control module harness connector C277 to deactivate RABS. • Key to RUN. • Shift into 4x4 mode. • Set multimeter to 20 VDC scale. • Measure voltage between Pin 5 of the anti-lock electronic control module harness connector C277 and chassis ground. • **Is the measured voltage less than 1 volt?**	Yes ▶ No ▶	GO to **J4**. SERVICE 4x4 indicator switch or SERVICE battery short in Circuit 210 (LB). GO to **J5**.

DIAGNOSIS AND TESTING (Continued)

PINPOINT TEST J: EXCESSIVE DUMP SOLENOID ACTIVITY (DTC 5) (Continued)

Test Step		Result ▶	Action to Take
J4	CHECK FOR LOW OR ERRATIC RABS SENSOR SIGNAL		
	• Disconnect anti-lock electronic control module harness connector C277. • Position vehicle on hoist and raise both front and rear wheels just enough to clear the floor. • Start the engine and turn the wheels at 8 km/h (5 mph). • Place multimeter on 2000 mVAC scale. • Measure the voltage across anti-lock electronic control module harness connector C277, Pins 3 and 10. • **Is the voltage less than 650 mV RMS or is RABS sensor signal erratic?**	Yes ▶ No ▶	COMPLETE Pinpoint Test K for Code 6, Steps **K3** through **K8**, then RETURN. GO to **J5** to verify. REINSTALL anti-lock electronic control module connector C277. GO to **J6**.
J5	CLEAR CODE/PULL CODE		
	• Key off. • Reconnect battery ground cable. • Verify all connectors are installed. • Locate and disconnect the diagnostic connector C159 from its mating half (Circuits 571 [BK/O] and 483 [R]). • Key on. • Begin diagnostic trouble code flashout by connecting Circuit 571 (BK/O) to a chassis ground for at least 1 second. • **Was original code obtained?**	Yes ▶ No ▶	If all steps are complete, GO to Pinpoint Test T. If all steps are not complete, RETURN to the last step completed and CONTINUE. GO to pinpoint test for corresponding code. If DTC 16 is obtained, GO to Pinpoint Test S.
J6	VERIFY PROPER WARNING LIGHT PROVEOUT		
	• Start the vehicle and observe the REAR ABS warning light for proper warning light proveout. • **Does the REAR ABS warning light prove out properly?**	Yes ▶ No ▶	GO to **J7**. GO to Pinpoint Test C.
J7	BASE BRAKE STOPPING TEST		
	• Remove the harness connector C277 from the anti-lock electronic control module. • Drive the vehicle at approximately 32 km/h (20 mph). • Perform a light to medium (normal traffic) stop. • **Do the rear wheels lock up?**	Yes ▶ No ▶	RECONNECT anti-lock electronic control module. GO to Symptom Chart. RECONNECT anti-lock electronic control module. GO to **J8**.
J8	DRY ROAD STOP TEST		
	• Drive the vehicle at approximately 16 km/h (10 mph) on dry pavement. **CAUTION: Do not exceed 16 km/h (10 mph) to prevent flat-spotting of tires.** • Press on brake pedal hard enough to lock all four wheels and observe the left rear wheel in the driver side mirror. • **Do the rear wheels lock up? (Momentary lockup followed by spinup is permissible.)**	Yes ▶ No ▶	REPLACE RABS valve. GO to Pinpoint Test S to verify concern is resolved. GO to **J9**.
J9	VERIFY PROPER RABS II OPERATION IN 4X2		
	WARNING: PERFORM THIS TEST ON AN AXLE HOIST ONLY. NOTE: Because vehicle is not on the ground, wheels will spin for a significant time. This is not indicative of vehicle braking performance. • Place vehicle on the hoist and raise high enough to clear all wheels off the ground. • Verify vehicle is in 4x2 mode (4x4 vehicles only.) • Place vehicle transmission in Drive Low (automatic) or 1st gear (manual). • Accelerate engine so that speedometer indicates 16 km/h (10 mph). • Press hard on the brake pedal until wheels stop. • **Do the rear wheels first lock up and then spin?**	Yes ▶ No ▶	LEAVE key on. GO to **J10**. REPLACE anti-lock brake control module. GO to Pinpoint Test S to verify concern is resolved.

Official Licensed Product

DIAGNOSIS AND TESTING (Continued)

PINPOINT TEST J: EXCESSIVE DUMP SOLENOID ACTIVITY (DTC 5) (Continued)

Test Step		Result ▶	Action to Take
J10	OBTAIN DIAGNOSTIC TROUBLE CODE		
	• Obtain diagnostic trouble code. • **Is Code 5 obtained?**	Yes ▶	Inconsistent result. Previous step indicates anti-lock brake control module is functioning correctly. CLEAR code REPEAT **J9**. If result repeats, GO to **J1**.
		No ▶	DTC 16 is obtained. RETURN to pinpoint tests. DTC obtained is NOT Code 5. GO to the pinpoint test for the code obtained.
		▶	No code is obtained. GO to Pinpoint Test E.

Pinpoint Test K: Erratic Speed Sensor Circuit (DTC 6)

Description

Code 6 is generated when the anti-lock electronic control module detects an interruption in the continuous signal from the RABS sensor while rolling, caused by an intermittent open internal to the RABS sensor, Circuit 519 (LG/BK), Circuit 523 (R/PK), or a damaged RABS sensor ring. This condition can be detected any time the brake pedal is not applied and 20 seconds has elapsed since the ignition self test.

Possible Contributing Base Brake Component/Vehicle Wiring Concerns

- Terminal backout in the anti-lock electronic control module harness connector at Pins 3 and 10
- Terminal backout in the RABS sensor harness connector at Pins A and B
- Bulkhead connector (between engine compartment and instrument panel) terminal backout or loose connection
- Anti-lock electronic control module or RABS sensor connectors are not fully mated with component
- Intermittent open/short in Circuit 519 (LG/BK) or Circuit 523 (R/PK)
- Damaged RABS sensor (possibly metal shavings on pole piece)
- Damaged RABS sensor ring (possibly teeth missing)

PINPOINT TEST K: ERRATIC SPEED SENSOR CIRCUIT (DTC 6)

Test Step		Result ▶	Action to Take
K1	CHECK YELLOW RABS WARNING LAMP		
	• Key off. • Locate and disconnect the diagnostic connector C159 from its mating half (Circuits 571 [BK/O] and 483 [R]). • Reconnect diagnostic connector C159. • Key to RUN. • **Does the yellow RABS warning lamp come on?**	Yes ▶ No ▶	Hard fault. GO to **K2**. Intermittent fault. GO to Pinpoint Test T and PROCEED with intermittent diagnosis for all affected circuits.
K2	VERIFY INTEGRITY OF ANTI-LOCK ELECTRONIC CONTROL MODULE HARNESS CONNECTION		
	• Key off. • Disconnect battery ground cable. • Remove the anti-lock electronic control module connector C277. • Inspect anti-lock electronic control module connector C277 for contamination and loose or bent terminals. • Pull gently on Circuit 519 (LG/BK) just behind Pin 3 on the harness connector C277. • Pull gently on Circuit 523 (R/PK) just behind Pin 10 on the harness connector C277. • **Are all connections clean and secure?**	Yes ▶ No ▶	LEAVE anti-lock electronic control module connector C277 disconnected. GO to **K3**. SERVICE terminals or connector as needed. If component side is not serviceable, REPLACE anti-lock electronic control module. GO to **K8**.

DIAGNOSIS AND TESTING (Continued)

PINPOINT TEST K: ERRATIC SPEED SENSOR CIRCUIT (DTC 6) (Continued)

	Test Step	Result ▶	Action to Take
K3	VERIFY INTEGRITY OF RABS SENSOR CONNECTION		
	• Verify key is off. • Remove RABS sensor harness connector C404. • Inspect RABS connector C404 for contamination and bent or loose terminals. • Gently pull on Circuit 519 (LG/BK) behind Pin B of harness connector C404. • Gently pull on Circuit 523 (R/PK) behind Pin A of harness connector C404. • **Are all connections clean and secure?**	Yes ▶ No ▶	REINSTALL RABS sensor connector C404. GO to **K4**. SERVICE terminal or connector as needed. If component side is not serviceable, REPLACE RABS sensor. GO to **K8**.
K4	VERIFY PROPER RABS SENSOR WIRE ROUTING		
	• Inspect wire routing. • **Are wires secure and properly routed?**	Yes ▶ No ▶	GO to **K5**. FIND and SERVICE as necessary. GO to **K8**.
K5	VERIFY RABS SENSOR INTEGRITY		
	• Check resistance between Pins A and B of the RABS sensor component connector. • **Is resistance between 900 and 2500 ohms?**	Yes ▶ No ▶	GO to **K6**. REPLACE RABS sensor. GO to **K8**.
K6	CHECK FOR ERRATIC RABS SENSOR SIGNAL AND LOOSE WIRE CONNECTORS		
	• Set multimeter on the 20 k ohm scale. • Check resistance between Pin 10 and Pin 3 of the harness connector C277 while shaking the harness from RABS sensor to anti-lock electronic control module. • **Is reading steady and between 900 and 2500 ohms?**	Yes ▶ No ▶	Signal is not erratic. GO to **K7**. FIND and SERVICE open/short along Circuits 519 (LG/BK) and 523 (R/PK). GO to **K8**.
K7	CHECK FOR METAL CHIPS ON RABS SENSOR MAGNET POLE PIECE		
	• Verify key is off. • Remove the RABS sensor from the rear axle housing and inspect for a buildup of metal chips on RABS sensor magnetic pole. • **Are metal chips present?**	Yes ▶ No ▶	DRAIN and CLEAN rear axle housing. GO to **K8**. REPLACE anti-lock electronic control module. GO to **K8**.
K8	CLEAR CODE/PULL CODE		
	• Key off. • Reconnect battery ground cable. • Verify all connectors are installed. • Locate and disconnect the diagnostic connector C159 from its mating half (Circuits 571 [BK/O] and 483 [R]). • Key to ON. • Begin diagnostic trouble code flashout by connecting Circuit 571 (BK/O) to a chassis ground for at least 1 second. • **Was original code obtained?**	Yes ▶ No ▶	GO to **K9**. GO to pinpoint test for corresponding code. If DTC 16 is obtained, GO to Pinpoint Test S.
K9	VERIFY PROPER WARNING LIGHT PROVEOUT		
	• Key on and observe the REAR ABS warning light for proper bulb proveout. • **Does the REAR ABS warning light prove out properly?**	Yes ▶ No ▶	Key off. GO to **K10**. GO to Pinpoint Test C.

Ford Motor Company Licensed Product

DIAGNOSIS AND TESTING (Continued)

PINPOINT TEST K: ERRATIC SPEED SENSOR CIRCUIT (DTC 6) (Continued)

Test Step		Result ▶	Action to Take
K10	MEASURE RABS SENSOR OUTPUT		
	• Put vehicle on hoist and raise so that the rear wheels can rotate freely. • Verify the vehicle is in 4x2 mode and hubs are unlocked. • Set an AC voltmeter on the 2000 mV scale. • Remove the cap from the RABS sensor test connector C143 and connect the AC voltmeter across the connector leads. • Start the engine and turn the rear wheels at 8 km/h (5 mph). • Measure the voltage output of the RABS sensor. • **Is 650 mV or more registered?**	Yes ▶ No ▶	REINSTALL the RABS sensor test connector C143 cap. GO to **K11**. REINSTALL the RABS sensor test connector cap. REPLACE RABS sensor. GO to Pinpoint Test S to verify concern is resolved.
K11	MEASURE RABS SENSOR AIR GAP		
	• Remove rear axle differential cover. • Measure the shortest distance from the RABS sensor pole piece to the teeth on the RABS sensor ring. • Rotate the axle 60-90 degrees. • Repeat the two previous steps (measure and rotate) five times for a total of five measurements. • **Are all measurements between 0.127 mm (0.005 inch) and 1.14 mm (0.045 inch) and within 0.254 mm (0.010 inch) of each other?**	Yes ▶ No ▶ ▶	GO to **K13**. Measurements are not between 0.127 mm (0.005 inch) and 1.14 mm (0.045 inch). CHECK for foreign material under RABS sensor mounting flange and on carrier housing. REPLACE RABS sensor. GO to **K12**. Not all measurements are within 0.254 mm (0.010 inch) of each other. REPLACE RABS sensor ring. GO to Pinpoint Test S to verify concern is resolved.
K12	IMPROPER RABS SENSOR GAP RESOLUTION		
	• Verify that the installed RABS sensor is seated fully in the bore and the hold-down bolt is tightened to specification. • Repeat measurements from Step K11. • **Are all measurements between 0.127 mm (0.005 inch) and 1.14 mm (0.045 inch) and within 0.254 mm (0.010 inch) of each other?**	Yes ▶ No ▶	GO to Pinpoint Test S to verify concern is resolved. REPLACE rear axle housing. GO to Pinpoint Test S to verify concern is resolved.
K13	CHECK CONDITION OF RABS SENSOR RING TEETH		
	• Carefully inspect each tooth on the RABS sensor ring. (Rear axle differential cover should still be off.) • **Are any teeth missing, malformed or damaged?**	Yes ▶ No ▶	REPLACE RABS sensor ring. GO to Pinpoint Test S to verify concern is resolved. RETURN to Pinpoint Test T.

Official Licensed Product

Pinpoint Test L: No Isolation Solenoid During Self Check (DTC 7)

Description

Code 7 is generated when the anti-lock electronic control module detects a missing isolation solenoid output. This can only be detected during an ignition self check or during RABS stop.

Possible Contributing Base Brake Component/Vehicle Wiring Concerns

- Anti-lock electronic control module internal fuse blown or internal open circuit
- Shorted isolation solenoid internal to the RABS valve
- Short or intermittent short in Circuit 599 (PK/LG)
- Contamination or bent Pins 1 and 3 of RABS valve connector shorting together

DIAGNOSIS AND TESTING (Continued)

PINPOINT TEST L: NO ISOLATION SOLENOID DURING SELF CHECK (DTC 7)

Test Step		Result ▶	Action to Take
L1	CHECK YELLOW RABS WARNING LAMP		
	• Key off. • Locate and disconnect the diagnostic connector C159 from its mating half (Circuits 571 [BK/O] and 483 [R]). • Reconnect diagnostic connector C159. • Key to RUN. • **Does the yellow RABS warning lamp come on?**	Yes ▶ No ▶	Hard fault. GO to **L2**. Intermittent fault, GO to Pinpoint Test T and PROCEED with intermittent diagnosis for all affected circuits.
L2	CHECK FOR RABS VALVE ISOLATION SOLENOID OR WIRING SHORTED TO GROUND		
	• Key off. • Disconnect battery ground cable. • Remove the anti-lock electronic control module harness connector C277. • Set the multimeter on the 200 ohm scale. • Measure the resistance between anti-lock electronic control module harness connector C277, Pin 13 and chassis ground. • **Is resistance 3-6 ohms?**	Yes ▶ No ▶	Circuit is not shorted. REPLACE anti-lock electronic control module. GO to **L6**. Resistance less than 3 ohms. Circuit is shorted. LEAVE anti-lock electronic control module harness connector C277 disconnected. GO to **L3**.
L3	CHECK INTEGRITY OF RABS VALVE CONNECTION		
	• Remove RABS valve connector C158. • Inspect RABS valve connector C158 and Pins 1 and 3. • **Are connections clean and secure?**	Yes ▶ No ▶	LEAVE RABS valve harness connector C158 disconnected. GO to **L4**. SERVICE terminals or connector as needed. If component side is not serviceable, REPLACE RABS valve. GO to **L6**.
L4	CHECK FOR SHORTED RABS VALVE ISOLATION SOLENOID		
	• Verify RABS valve harness connector C158 removed. • Set the multimeter on the 200 ohm scale. • Measure the resistance between Pins 1 and 3 of RABS valve. • **Is resistance greater than 3 ohms?**	Yes ▶ No ▶	LEAVE RABS valve harness connector C158 disconnected. GO to **L5**. REPLACE RABS valve. GO to **L6**.
L5	CHECK FOR SHORT TO GROUND ALONG HARNESS CIRCUIT 599 (PK/LG)		
	• Set multimeter on 20 k ohm scale. • Measure resistance between anti-lock electronic control module harness connector C277, Pin 13 (PK/LG) and chassis ground. • **Is resistance less than 20 k ohms?**	Yes ▶ No ▶	SERVICE ground short in Circuit 599 (PK/LG) between anti-lock electronic control module and RABS valve. GO to **L6**. Conflict of information. REPEAT **L3**.
L6	CLEAR CODE/PULL CODE		
	• Key off. • Reconnect battery ground cable. • Verify all connectors are installed. • Locate and disconnect the diagnostic connector C159 from its mating half (Circuits 571 [BK/O] and 483 [R]). • Key to RUN. • Begin diagnostic trouble code flashout by connecting Circuit 571 (BK/O) to a chassis ground for at least 1 second. • **Is original code obtained?**	Yes ▶ No ▶	If all steps are complete, GO to Pinpoint Test T. If all steps are not complete, RETURN to the last step completed and CONTINUE. GO to pinpoint test for corresponding code. If DTC 16 is obtained, GO to Pinpoint Test S.

Official Licensed Product Ford Motor Company

DIAGNOSIS AND TESTING (Continued)

Pinpoint Test M: No Dump Solenoid During Self Check (DTC 8)

Description

Code 8 is generated when the anti-lock electronic control module detects a missing dump solenoid output. This concern can only be detected during an ignition self test or during a REAR ABS stop.

Possible Contributing Base Brake Component/Vehicle Wiring Concerns

- Anti-lock electronic control unit internal fuse blown or internal open circuit
- Shorted dump solenoid internal to RABS valve
- Short or intermittent short in Circuit 664 (Y/LG)
- Bulkhead connector between engine compartment and instrument panel terminals shorted

PINPOINT TEST M: NO DUMP SOLENOID DURING SELF CHECK (DTC 8)

	Test Step	Result ▶	Action to Take
M1	CHECK YELLOW RABS WARNING LAMP		
	• Key off. • Locate and disconnect the diagnostic connector C159 from its mating half (Circuits 571 [BK/O] and 483 [R]). • Reconnect diagnostic connector C159. • Key to RUN. • **Does the yellow RABS warning light come ON?**	Yes ▶ No ▶	Hard fault. GO to **M2**. Intermittent fault. GO to Pinpoint Test T and PROCEED with intermittent diagnosis for all affected circuits.
M2	CHECK FOR RABS VALVE DUMP SOLENOID OR WIRING SHORTED TO GROUND		
	• Key off. • Disconnect battery ground cable. • Remove the anti-lock electronic control module harness connector C277. • Set the multimeter on the 200 ohm scale. • Measure the resistance between anti-lock electronic control module harness connector C277, Pin 8 and chassis ground. • Measure the resistance between anti-lock electronic control module harness connector C277, Pin 14 and chassis ground. • **Is resistance 1-3 ohms between anti-lock electronic control module harness Pin 8 and ground OR between anti-lock electronic control module harness Pin 14 and ground?**	Yes ▶ No ▶	REPLACE anti-lock electronic control module. GO to **M4**. LEAVE anti-lock electronic control module harness connector C277 disconnected. GO to **M3**.
M3	CHECK FOR SHORTED RABS VALVE DUMP SOLENOID		
	• Remove RABS valve harness connector C158. • Set the multimeter on the 200 ohm scale. • Measure the resistance between Pins 3 and 2 of RABS valve. • **Is resistance greater than 1 ohm?**	Yes ▶ No ▶	Leave RABS valve harness connector C158 disconnected. GO to **M4**. REPLACE RABS valve. GO to **M5**.
M4	CHECK FOR SHORT TO GROUND ALONG HARNESS CIRCUIT 664 (Y/LG)		
	• Set multimeter on 20 ohm scale. • Measure resistance between anti-lock electronic control module harness connector C277, Pin 8 and RABS valve harness connector C158, Pin 2. • Measure resistance between anti-lock electronic control module harness connector C277, Pin 14 and valve harness connector C158, Pin 2. • **Is resistance greater than 10 ohms between anti-lock electronic control module harness Pin 8 and RABS valve Pin 2 OR between anti-lock electronic control module harness Pin 14 and RABS valve Pin 2?**	Yes ▶ No ▶	Conflict of information. REPEAT **M2**. SERVICE short in Circuit 664 (Y/LG) between anti-lock electronic control module and RABS valve. GO to **M5**.

Ford Motor Company Official Licensed Product

DIAGNOSIS AND TESTING (Continued)

PINPOINT TEST M: NO DUMP SOLENOID DURING SELF CHECK (DTC 8) (Continued)

Test Step		Result ▶	Action to Take
M5	CLEAR CODE/PULL CODE		
	• Key off. • Reconnect battery ground cable. • Verify all connectors are installed. • Locate and disconnect the diagnostic connector C159 from its mating half (Circuits 571 [BK/O] and 483 [R]). • Key to RUN. • Begin diagnostic trouble code flashout by connecting Circuit 571 (BK/O) to a chassis ground for at least 1 second. • **Is original code obtained?**	Yes ▶ No ▶	If all steps are complete, GO to Pinpoint Test T. If all steps are not complete, RETURN to the last step completed and CONTINUE. GO to pinpoint test for corresponding code. If DTC 16 is obtained, GO to Pinpoint Test S.

Pinpoint Test N: High Speed Sensor Resistance (DTC 9)

Description

Code 9 is generated when the anti-lock electronic control module detects high RABS sensor resistance. The anti-lock electronic control module will consider the RABS sensor circuit to have a high resistance when it exceeds approximately 3 k ohms. The code can also be generated by a failed internal anti-lock electronic control module circuit.

Possible Contributing Base Brake Component/Vehicle Wiring Concerns

- Terminal backout in the anti-lock electronic control module harness connector at Pin 3 or Pin 10
- Terminal backout in the RABS sensor harness connector at Pins A or B
- Anti-lock electronic control module or RABS sensor connectors not fully mated with component
- Open or intermittent open in Circuit 519 (LG/BK) or Circuit 523 (R/PK)

Licensed Product Ford Motor Company

PINPOINT TEST N: HIGH SPEED SENSOR RESISTANCE (DTC 9)

Test Step		Result ▶	Action to Take
N1	CHECK YELLOW RABS WARNING LAMP		
	• Key off. • Locate and disconnect the diagnostic connector C159 from its mating half (Circuits 571 [BK/O] and 483 [R]). • Reconnect diagnostic connector C159. • Key on. • **Does the yellow RABS warning lamp come on?**	Yes ▶ No ▶	Hard fault. GO to **N2**. Intermittent fault. GO to Pinpoint Test T and PROCEED with intermittent diagnosis for all affected circuits.
N2	VERIFY INTEGRITY OF ANTI-LOCK ELECTRONIC CONTROL MODULE CONNECTION		
	• Key off. • Disconnect battery ground cable. • Remove the anti-lock electronic control module harness connector C277. • Pull gently on Circuit 519 (LG/BK) just behind Pin 3 on the anti-lock electronic control module harness connector C277. • Pull gently on Circuit 523 (R/PK) just behind Pin 10 on the anti-lock electronic control module harness connector C277. • **Is terminal fully engaged?**	Yes ▶ No ▶	LEAVE anti-lock electronic control module connector C277 disconnected. GO to **N3**. SERVICE terminal or connector as needed. GO to **N6**.

DIAGNOSIS AND TESTING (Continued)

PINPOINT TEST N: HIGH SPEED SENSOR RESISTANCE (DTC 9) (Continued)

Test Step		Result ▶	Action to Take
N3	VERIFY INTEGRITY OF RABS SENSOR CONNECTION		
	• Remove RABS sensor harness connector C404. • Inspect RABS sensor component connector C404 for contamination or loose terminals. • Gently pull on Circuit 519 (LG/BK) behind Pin B of harness connector C404. • Gently pull on Circuit 523 (R/PK) behind Pin A of harness connector C404. • **Are all connections clean and secure?**	Yes ▶ No ▶	LEAVE sensor connector C404 disconnected. GO to **N4**. SERVICE terminals or connector as needed, if component side is not serviceable, REPLACE RABS sensor. GO to **N6**.
N4	CHECK FOR CONTINUITY ALONG HARNESS CIRCUITS 519 (LG/BK) and 523 (R/PK)		
	• Set multimeter on 200 ohm scale. • Measure resistance between anti-lock electronic control module harness connector C277, Pin 3 and RABS sensor harness connector C404, Pin B. • Measure resistance between anti-lock electronic control module harness connector C277, Pin 10 and RABS sensor harness connector C404, Pin A. • **Are both resistances less than 10 ohms?**	Yes ▶ No ▶	Circuit is not open. GO to **N5**. FIND and SERVICE open along Circuit 519 (LG/BK) and 523 (R/PK). GO to **N6**.
N5	CHECK FOR OPEN RABS SENSOR		
	• Measure resistance between RABS sensor Pins A and B. • **Is resistance less than 2500 ohms?**	Yes ▶ No ▶	REPLACE anti-lock electronic control module. GO to **N6**. REPLACE RABS sensor. GO to **N6**.
N6	CLEAR CODE/PULL CODE		
	• Key off. • Reconnect battery ground cable. • Verify all connectors are installed. • Locate and disconnect the diagnostic connector C159 from its mating half (Circuits 571 [BK/O] and 483 [R]). • Key to RUN. • Begin diagnostic trouble code flashout by connecting Circuit 571 (BK/O) to a chassis ground for at least 1 second. • **Is original code obtained?**	Yes ▶ No ▶	If all steps are complete, GO to Pinpoint Test T. If all steps are not complete, RETURN to the last step completed and CONTINUE. GO to pinpoint test for corresponding code. If Code 16 is obtained, GO to Pinpoint Test S.

Official Licensed Product

Pinpoint Test P: Low Speed Sensor Resistance (DTC 10)

Description

Code 10 is generated when the anti-lock electronic control module detects low RABS sensor resistance. The code can also be generated by a short in Circuit 519 (LG/BK) or Circuit 523 (R/PK), or a failed internal anti-lock electronic control module circuit.

Possible Contributing Base Brake Component/Vehicle Wiring Concerns

- Short between anti-lock electronic control module harness connector Pin 3 and Pin 10
- Short between RABS sensor connector Pins A and B
- Bulkhead connector (between engine compartment and instrument panel) sensor terminals shorted together
- Intermittent short in Circuit 519 (LG/BK) or Circuit 523 (R/PK)

DIAGNOSIS AND TESTING (Continued)

PINPOINT TEST P: LOW SPEED SENSOR RESISTANCE (DTC 10)

	Test Step	Result ▶	Action to Take
P1	CHECK YELLOW RABS WARNING LAMP		
	• Key off. • Locate and disconnect the diagnostic connector C159 from its mating half (Circuits 571 [BK/O] and 483 [R]). • Reconnect diagnostic connector C159. • Key on. • **Does the yellow RABS warning lamp come on?**	Yes ▶ No ▶	Hard fault. GO to **P2**. Intermittent fault. GO to Pinpoint Test T and PROCEED with intermittent diagnosis for all affected circuits.
P2	VERIFY INTEGRITY OF ANTI-LOCK ELECTRONIC CONTROL MODULE CONNECTION		
	• Key off. • Disconnect battery ground cable. • Remove the anti-lock electronic control module harness connector C277. • Pull gently on wire just behind Pin 3 on the harness connector C277. • Pull gently on wire just behind Pin 10 on the harness connector C277. • **Is terminal fully engaged?**	Yes ▶ No ▶	LEAVE anti-lock electronic control module connector C277 disconnected. GO to **P3**. SERVICE terminal or connector as needed. GO to **P7**.
P3	VERIFY INTEGRITY OF RABS SENSOR CONNECTION		
	• Remove RABS sensor harness connector C404. • Inspect RABS sensor component connector C404. • Gently pull on wire behind Pins A and B of harness connector C404. • Gently pull on wire behind Pins A and B of component connector C404. • **Are all connections clean and secure?**	Yes ▶ No ▶	LEAVE RABS sensor connector C404 disconnected. GO to **P4**. SERVICE terminals or connector as needed, if component side is not serviceable, REPLACE RABS sensor. GO to **P7**.
P4	CHECK FOR SHORT ALONG HARNESS CIRCUIT 519 (LG/BK) WITH CIRCUIT 523 (R/PK)		
	• Set multimeter on 20 k ohm scale. • Measure resistance between anti-lock electronic control module harness connector C277, Pin 3 and Pin 10. • **Is resistance greater than 20 k ohms?**	Yes ▶ No ▶	Circuits are not shorted. GO to **P5**. FIND and SERVICE short along Circuits 519 (LG/BK) and 523 (R/PK). GO to **P7**.
P5	CHECK FOR SHORT TO CHASSIS GROUND ALONG CIRCUIT 523 (R/PK)		
	• Verify multimeter is on 20 k ohm scale. • Measure resistance between anti-lock electronic control module harness connector C277, Pin 10 and chassis ground. • **Is resistance greater than 20 k ohms?**	Yes ▶ No ▶	Circuit is not shorted. GO to **P6**. FIND and SERVICE short along Circuit 523 (R/PK). GO to **P7**.
P6	CHECK FOR SHORTED RABS SENSOR		
	• Measure resistance between RABS sensor Pins A and B. • **Is resistance 900-2500 ohms?**	Yes ▶ No ▶	REPLACE anti-lock electronic control module. GO to **P7**. REPLACE RABS sensor. GO to **P7**.
P7	CLEAR CODE/PULL CODE		
	• Key off. • Reconnect battery ground cable. • Verify all connectors are installed. • Locate and disconnect the diagnostic connector C159 from its mating half (Circuits 571 [BK/O] and 483 [R]). • Key to run. • Begin diagnostic trouble code flashout by connecting Circuit 571 (BK/O) to a chassis ground for at least 1 second. • **Is original code obtained?**	Yes ▶ No ▶	If all steps are complete, GO to Pinpoint Test T. If all steps are not complete, RETURN to the last step completed and CONTINUE. GO to pinpoint test for corresponding code. If DTC 16 is obtained, GO to Pinpoint Test S.

Off-Line Licensed Product Motor Company

DIAGNOSIS AND TESTING (Continued)

Pinpoint Test Q: Stoplamp Circuit Always Closed (DTC 11)

Description

Code 11 is caused by the stoplight switch always being closed prior to the vehicle moving. If the stoplight switch remains closed when the vehicle begins to move, the REAR ABS warning light will turn on at approximately 26 km/h (16 mph). Code 11 will not be latched in the control anti-lock electronic control module's memory until the speed of the vehicle exceeds 60 km/h (37 mph) for at least 10 seconds. If the vehicle does not exceed 60 km/h (37 mph) for at least 10 seconds, then the REAR ABS warning light will turn on but the anti-lock electronic control module will not latch a code. Code 11 can be caused by a driver resting his foot on the brake pedal with just enough pressure to close the stoplight switch, while driving at least 60 km/h (37 mph) for a minimum of ten seconds. When this occurs, a Code 11 will be latched by the anti-lock electronic control module.

Possible Contributing Base Brake Component/Vehicle Wiring Concerns

- Terminal backout in the anti-lock electronic control module harness connector at Pin 11
- Missing (burned-out) stoplamps. All stoplamps must be missing or burned out to cause a Code 11
- An intermittent/continuous open in Circuit 511 (LG). This open would be between anti-lock electronic control module connector Pin 11 and the stoplight switch
- Worn or damaged stoplight switch

PINPOINT TEST Q: STOPLAMP CIRCUIT ALWAYS CLOSED (DTC 11)

	Test Step	Result ▶	Action to Take
Q1	CHECK YELLOW RABS WARNING LAMP		
	• Key off. • Locate and disconnect the diagnostic connector C159 from its mating half (Circuits 571 [BK/O] and 483 [R]). • Reconnect diagnostic connector C159. • Key on. • **Does the yellow RABS warning lamp come on?**	Yes ▶ No ▶	Hard fault. GO to **Q2**. Intermittent fault. GO to Pinpoint Test T and PROCEED with intermittent diagnosis for all affected circuits.
Q2	CHECK VEHICLE STOPLAMP OPERATION		
	• Key off. • Apply pressure to the brake pedal and then release pressure while observing the stoplamps. • **Do stoplamps function properly?**	Yes ▶ No ▶ ▶	GO to **Q5**. Lamps do not illuminate. GO to **Q3**. Lamps always illuminated. SERVICE or REPLACE vehicle stoplight switch. GO to **Q6**.
Q3	CHECK VEHICLE STOPLAMPS		
	• Check vehicle stoplamp bulbs. NOTE: Both bulbs need to be burned out to cause a Code 11. • **Are the bulbs burned out?**	No ▶ Yes ▶	GO to **Q4**. REPLACE stoplamp bulbs and GO to **Q6**.
Q4	CHECK FOR BLOWN STOPLAMP FUSE		
	• Remove and visually inspect stoplamp fuse located in the fuse panel. • **Is the fuse blown?**	Yes ▶ No ▶	REPLACE fuse and INVESTIGATE reason for blown fuse. GO to **Q6**. CHECK Circuit 511 (LG) for open condition. If none found, SERVICE or REPLACE vehicle stoplight switch. GO to **Q6**.
Q5	CHECK FOR CONTINUITY BETWEEN ANTI-LOCK ELECTRONIC CONTROL MODULE CONNECTOR PIN 11 AND THE STOPLAMP SWITCH		
	• Set multimeter on 20 volt scale. • Step on brake pedal. • Measure voltage between anti-lock electronic control module harness connector C277, Pin 11 and chassis ground. • **Is the voltage greater than 9 volts?**	Yes ▶ No ▶	REPLACE anti-lock electronic control module. GO to **Q6**. FIND and SERVICE high resistance or open wire. REINSTALL all connectors. GO to **Q6**.

Official Licensed Product Ford Motor Company

DIAGNOSIS AND TESTING (Continued)

PINPOINT TEST Q: STOPLAMP CIRCUIT ALWAYS CLOSED (DTC 11) (Continued)

Test Step		Result ▶	Action to Take
Q6	CLEAR CODE/PULL CODE		
	• Key off. • Reconnect battery ground cable. • Verify all connectors are installed. • Locate and disconnect the diagnostic connector C159 from its mating half (Circuits 571 [BK/O] and 483 [R]). • Key to RUN. • Begin diagnostic trouble code flashout by connecting Circuit 571 (BK/O) to a chassis ground for at least 1 second. • **Is original code obtained?**	Yes ▶ No ▶	If all steps are complete, GO to Pinpoint Test T. If all steps are not complete, RETURN to the last step completed and CONTINUE. GO to pinpoint test for corresponding code. If DTC 16 is obtained, GO to Pinpoint Test S.

Pinpoint Test R: Loss of Hydraulic Fluid During Anti-Lock Stop (DTC 12)

Description

Code 12 is generated when the anti-lock electronic control module detects that the brake fluid level in the brake master cylinder reservoir is low for one or more seconds during an anti-lock stop. It can also be generated by a short in the red brake warning lamp circuit.

Possible Contributing Base Brake Component/Vehicle Wiring Concerns

- Low brake master cylinder reservoir fill level
- Fluid leaks in vehicle brake system
- Worn or damaged fluid level switch, or fluid level switch circuit shorted to ground
- Brake master cylinder reservoir float that sticks in the bottom of brake master cylinder reservoir or does not float
- Damaged diode/resistor element in red brake warning lamp circuit
- Damaged ignition switch
- Ground short or open in Circuit 512 (T/LG) or Circuit 531 (DG/Y)
- Damaged anti-lock electronic control module

Official Licensed Product Ford Motor Company

PINPOINT TEST R: LOSS OF HYDRAULIC FLUID DURING ANTI-LOCK STOP (DTC 12)

Test Step		Result ▶	Action to Take
R1	CHECK WARNING LIGHTS		
	• Key off. • Locate and disconnect the diagnostic connector C159 from its mating half (Circuits 571 [BK/O] and 483 [R]). • Reconnect diagnostic connector C159. • Key on. • **Do both the red BRAKE and yellow RABS warning lights come on?**	Yes ▶ No ▶	Hard fault. GO to **R2**. If the brakes have been serviced recently, or if brake fluid has been added to the system recently, most likely Code 12 was falsely set at that time and RABS is OK. If this is not the case, GO to Test T for intermittent diagnosis procedures for the affected circuits.
R2	CHECK BRAKE FLUID LEVEL IN MASTER CYLINDER		
	• Key off. • Check the brake fluid level in the brake master cylinder reservoir. • **Is the fluid level within specification?**	Yes ▶ No ▶	GO to **R3**. CHECK for leaks in the brake system. SERVICE as required. FILL brake master cylinder reservoir to the required level. GO to **R9**.
R3	VERIFY FLOAT BUOYANCY		
	• Remove the brake master cylinder reservoir filler cap. • Attempt to push down the float with a clean, blunt steel implement, then let it float back up. • **Does the float go down then float back up?**	Yes ▶ No ▶	GO to **R4**. REPLACE the brake master cylinder reservoir. BLEED the brake system. GO to **R9**.

DIAGNOSIS AND TESTING (Continued)

PINPOINT TEST R: LOSS OF HYDRAULIC FLUID DURING ANTI-LOCK STOP (DTC 12) (Continued)

Test Step		Result ▶	Action to Take
R4	CHECK CIRCUIT 531 (DG/Y) FOR GROUND SHORT		
	• Key off. • Disconnect brake fluid level switch harness connector C170. • Disengage parking brake. • Check for ground short on Circuit 531 (DG/Y) at brake fluid level switch harness connector C170. • **Is there a ground short?**	Yes ▶ No ▶	SERVICE ground short in Circuit 531 (DG/Y). RECONNECT all components. GO to **R9**. GO to **R5**.
R5	CHECK DIODE/RESISTOR ELEMENT		
	• Engage parking brake. • Check for ground short on Circuit 531 (DG/Y) at brake fluid level switch harness connector C170. • **Is there a ground short?**	Yes ▶ No ▶	REPLACE resistor/diode element. RECONNECT all components. GO to **R9**. GO to **R6**.
R6	CHECK CIRCUIT 512 FOR GROUND SHORT		
	• Key off. • Disconnect battery negative cable. • Disconnect fluid level switch. • Disconnect ignition switch. • Disconnect anti-lock electronic control module. • Check for short to ground on Pin 2 of anti-lock electronic control module harness connector C277 (Circuit 512 [T/LG]). • **Is there a ground short?**	Yes ▶ No ▶	SERVICE ground short in Circuit 512 (T/LG). RECONNECT all components. GO to **R9**. GO to **R7**.
R7	CHECK IGNITION SWITCH		
	• Reconnect ignition switch. • Check for short to ground on Pin 2 of anti-lock electronic control module harness connector C277 (Circuit 512 [T/LG]). • **Is there a ground short?**	Yes ▶ No ▶	REPLACE ignition switch. RECONNECT all components. GO to **R9**. GO to **R8**.
R8	CHECK BRAKE FLUID LEVEL SWITCH		
	• Reconnect brake fluid level switch connector C170. • Check for short to ground on Pin 2 of anti-lock electronic control module harness connector C277 (Circuit 512). • **Is there a ground short?**	Yes ▶ No ▶	REPLACE brake master cylinder reservoir. RECONNECT all components. GO to **R9**. REPLACE anti-lock electronic control module. GO to **R9**.
R9	CLEAR CODE/PULL CODE		
	• Key off. • Reconnect battery negative cable. • Verify all connectors are installed. • Locate and disconnect the diagnostic connector C159 from its mating half (Circuits 571 [BK/O] and 483 [R]). • Key to run. • Begin diagnostic trouble code flashout by grounding Circuit 571 (BK/O) for 1 second. • **Is original code obtained?**	Yes ▶ No ▶	If all steps are complete, GO to Pinpoint Test T. If all steps are not complete, RETURN to the last step completed and CONTINUE. GO to pinpoint test for corresponding DTC. If DTC 16 is obtained, GO to Pinpoint Test S.

Official Licensed Product Ford Motor Company

Pinpoint Test S: Verification Drive Test

Purpose

This drive test will be used when either of the two conditions listed below exists.

1. Required Service Verification

   This drive procedure will be used after all vehicle service. Once a vehicle has been serviced, it is necessary to verify the service by driving the vehicle. This is because the anti-lock electronic control module is unable to detect some system concerns until the vehicle is being driven a certain way. Therefore the drive verification test is a very important step.

DIAGNOSIS AND TESTING (Continued)

2. Symptom Evaluation Drive

When a vehicle is brought to the dealer, the customer might have only a general concern about the way his or her vehicle is braking. In these situations there might not be a clear system concern to troubleshoot. In this type of situation, this drive test is designed to produce common system concern symptoms. Use this drive test to determine a symptom. Once a symptom is found, a symptom troubleshooting procedure can be followed to service the vehicle.

Drive Description

This drive test is designed to be a generic drive test that is used for the three purposes listed below:

- to verify service of the RABS II system on a vehicle
- to attempt to recreate an intermittent concern
- to attempt to detect a symptom when a diagnostic trouble code or a concern symptom is not known

PINPOINT TEST S: VERIFICATION DRIVE TEST

Test Step		Result ▶	Action to Take
S1	KEEP ALIVE MEMORY (KAM) FUSE CHECK		
	• Key to RUN. Observe REAR ABS warning light proveout. • With the headlamps on and while pushing on the brake pedal, monitor the yellow REAR ABS warning light in the dash for 10 seconds. • **Does the REAR ABS warning light prove out normally?**	Yes ▶ No ▶	GO to **S2**. The REAR ABS warning light flashes. REPLACE KAM fuse (SEE owner guide for fuse location). REPEAT **S1**.
S2	PERFORM LOW SPEED STOP		
	NOTE: Wetting down the area where stop is to be performed will aid this test. NOTE: An assistant to observe rear wheels is helpful. • Drive vehicle at approximately 16 km/h (10 mph). • Press on brake pedal hard enough to lock all four wheels, and observe the left rear wheel in the driver's mirror. • Repeat the second step, except observe right rear wheel in passenger mirror. • **Do both rear wheels lock or does one rear wheel lock consistently? (Momentary lockup is permissible.)**	Yes ▶ No ▶ ▶ ▶	Also, REAR ABS warning light is not on. GO to Symptom Chart for one or both rear wheels lock up. Other symptoms are detected. GO to **S6**. Also, REAR ABS warning light is not on. GO to **S3**. REAR ABS warning light comes on and stays on. GO to **S7**.
S3	CHECK FOR UNWARRANTED RABS II ACTIVITY		
	NOTE: Stop should be performed on dry pavement. • Drive vehicle at approximately 32 km/h (20 mph). • Turn off the windshield wipers if they are on. (Wipers can cause a pulsation in the brake pedal that can be mistaken for RABS II activity.) • Perform a light to medium (normal traffic) stop. • Feel for pulsation in the brake pedal within 10 seconds after the vehicle has come to a stop. • **Is there pulsation in the brake pedal any time during the stop or within 10 seconds after the vehicle has stopped?**	Yes ▶ No ▶ ▶ ▶	Also, REAR ABS warning light is not on. GO to Symptom Chart for unwarranted RABS II activity. Other symptoms are detected. GO to **S6**. REAR ABS warning light is not on. GO to **S4**. REAR ABS warning light comes on and stays on. GO to **S7**.
S4	BRAKE STOPLAMP/SWITCH CHECK		
	• Key to RUN. • Press on the brake pedal. • Release brake pedal. • **Do the stoplamps come on and then turn off properly?**	Yes ▶ No ▶	GO to **S5**. GO to Pinpoint Test Q.
S5	DETERMINE DRIVE TEST IS COMPLETE		
	• **Has customer concern been addressed and corrected by previous actions?**	Yes ▶ No ▶	STOP. Vehicle RABS II function has been verified. REFER to Symptom Chart.
S6	DETERMINE NEXT DIAGNOSTIC STEP BASED ON BRAKE SYMPTOM		
	• Hard or soft brake pedal. • Lack of sufficient vehicle deceleration upon brake application • **Are any of the above symptoms present?**	Yes ▶ No ▶	GO to Symptom Chart. Concern is not in the RABS II system. REFER to Section 06-00 for diagnosis.

Official Licensed Product Ford Motor Company

DIAGNOSIS AND TESTING (Continued)

PINPOINT TEST S: VERIFICATION DRIVE TEST (Continued)

Test Step		Result ▶	Action to Take
S7	OBTAIN DIAGNOSTIC TROUBLE CODE		
	• Obtain diagnostic trouble code. • **Is the diagnostic trouble code the same as before and has the entire pinpoint test for the code been completed?**	Yes ▶ No ▶	REPEAT steps once more. Pinpoint test is not complete. RETURN to the last step completed in the pinpoint test. ▶ Code obtained is different. GO to the pinpoint test for the code obtained. ▶ No code is obtained. GO to Pinpoint Test E.

Pinpoint Test T: Intermittent Diagnosis

As previously mentioned, intermittent concerns are the most difficult to diagnose.

An understanding of code storage and automatic code erasure is important.

First, codes can only be stored if the anti-lock electronic control module has power. The anti-lock electronic control module gets primary power from the ignition feed into Pins 1 and 9. If this voltage is missing or less than 11 V, the anti-lock electronic control module will not initialize and therefore, a code cannot be stored. However, any code already in memory will be retained as long as the Keep-Alive Memory power is available. Code 16 (system OK) is present whenever the anti-lock electronic control module sees the required voltage (assuming no other diagnostic trouble codes are present).

Therefore, some codes read out in the System Pre-Check might not result in any trouble found in the pinpoint test performed. More likely, this is an indication of an intermittent electrical concern.

At times, running completely through a pinpoint test will not lead to a concern resolution. Often, the concern is due to an intermittent connection, termination, or damaged circuit. An attempt has been made to point out obvious sources for potential intermittents within the pinpoint tests. However, it should be noted that several circuits pass through one or more connections between components. These are also areas of potential concern and should be considered.

PINPOINT TEST T: INTERMITTENT DIAGNOSIS

Test Step		Result ▶	Action to Take
T1	CLEAR CODES, RECONNECT COMPONENTS		
	• Reinstall any components removed and reconnect all connections. • Clear all codes. • Key to RUN. • **Does the REAR ABS warning light prove out?**	Yes ▶ No ▶	GO to **T3**. Light stays on. GO to **T2**.
T2	SERVICE CONNECTOR / TERMINAL FAULT		
	• Most likely problem is at one of the affected component connectors so that terminals unseat or back out upon installation. At each affected connection, look for: — bent terminals. — damaged connector terminal locks. — damaged connector wedge. • If one of the above conditions is found, check the length of the affected circuit once the connection is remade. If the wire is too tight (short), damage is likely to recur once vehicle is given back to the customer. Service the wire as necessary to correct tight wire conditions. • **Are any of the above conditions noted?**	Yes ▶ No ▶	SERVICE connector and terminal as necessary. GO to **T7**. GO to **T6**.

DIAGNOSIS AND TESTING (Continued)

PINPOINT TEST T: INTERMITTENT DIAGNOSIS (Continued)

Test Step		Result	Action to Take
T3	WIGGLE TEST		
	• Leave key on. NOTE: Start at one component and wiggle connector by connector until the whole circuit has been tested. • Wiggle an affected circuit in one location only. • Observe REAR ABS warning light. • **Is the REAR ABS warning light on?**	Yes ▶ No ▶	SERVICE the wire terminal or connector as identified in the wiggle test. GO to **T5**. GO to **T4**.
T4	VERIFY ALL CIRCUITS HAVE BEEN TESTED		
	• **Have all affected circuits for the code being serviced been tested?**	Yes ▶ No ▶	Key off. GO to **T6**. GO to **T3** and CHECK next circuit.
T5	RETRIEVE CODE		
	• Retrieve code. • **Is this code different than the code being serviced?**	Yes ▶ No ▶	GO to the appropriate pinpoint test. SERVICE the wire, terminal, or connector as necessary. GO to **T7**.
T6	VERIFY ALL APPROPRIATE DIAGNOSTIC PROCEDURES HAVE BEEN RUN		
	NOTE: All steps of the pinpoint test for the code being serviced must be completed. (If some tests were performed, then go the pinpoint step last completed and continue.) • **Has the System Pre-Check been run and a code retrieved?**	Yes ▶ No ▶	All diagnostic procedures have been run. RETURN to the pinpoint test and PROCEED. RETURN to procedure(s) not yet performed and PROCEED.
T7	VERIFY CONDITION RESOLVED		
	• Clear all codes. • Key off. • Retrieve code. • **Is Code 16 set?**	Yes ▶ No ▶ ▶	STOP. Concern has been corrected. Code being serviced still exists. GO to **T4**. Different code is set. GO to appropriate pinpoint test.

Official Licensed Product Ford Motor Company

Pinpoint Test U: Rear ABS and Speedometer Are Not Functioning Correctly

This procedure is intended to determine whether the cause for loss of or erratic Programmable Speedometer / Odometer Module (PSOM) function is due to the lack of a signal from the RABS Sensor.

There are two basic reasons that PSOM would not receive a signal from the RABS sensor:

1. The RABS sensor or the signal from the RABS sensor is faulty and is either not being generated or not reaching the anti-lock electronic control module or PSOM. In cases where the concern is not intermittent and not reaching the anti-lock electronic control module, the rear ABS warning light will be on upon vehicle start-up and a diagnostic trouble code should be obtained upon RABS II diagnostic trouble code retrieval. Where the concern is intermittent and the rear ABS warning light does not come on during vehicle start-up, a diagnostic trouble code can still be stored in the anti-lock electronic control module (see the Symptom Chart).
2. The wiring or interconnections in the vehicle harness between the anti-lock electronic control module and the PSOM are faulty. This can lead to erratic PSOM function and is difficult to diagnose.

   This procedure will only determine whether the RABS sensor is functioning based upon whether a signal is received at the PSOM. If it is determined that the RABS sensor is sending out a proper signal, refer to Section 13-01.

DIAGNOSIS AND TESTING (Continued)

PINPOINT TEST U: REAR ABS AND SPEEDOMETER ARE NOT FUNCTIONING CORRECTLY

Test Step		Result	Action to Take
U1	DETERMINE STATE OF ABS WARNING LIGHT		
	• Observe rear ABS warning light. • Key to START. • Allow key to return to the RUN position. • **Does the rear ABS warning light turn on?**	Yes ▶ No ▶	GO to **U2**. GO to Pinpoint Test C. RETURN when rear ABS warning light fault has been serviced.
U2	OBTAIN REAR ABS CODE		
	• Obtain rear ABS code (refer System Pre-Check). NOTE: Any other code obtained represents a rear ABS system concern and does not have an effect on the ability of the RABS sensor to send the speed signal to PSOM. Resolve the rear ABS system concern indicated by the diagnostic trouble code first. When the rear ABS system concern is corrected, repeat this step to continue PSOM concern diagnosis. • **Are any of the following codes obtained: 6, 9 or 10?**	Yes ▶ No ▶ ▶ ▶	GO to the pinpoint test for the code obtained. DTC 16 is obtained. GO to **U3**. A code other than 6, 9, 10 or 16 is obtained. GO to appropriate pinpoint test. No code is obtained. GO to Pinpoint Test E.
U3	VERIFY RABS SENSOR SPEED SIGNAL AT ANTI-LOCK ELECTRONIC CONTROL MODULE		
	• Key off. • Remove the harness connector C277 from the anti-lock electronic control module. • Raise the vehicle so that all the wheels are clear of the ground. If the vehicle is a 4x4, verify the transfer case is in the 4x2 mode. • Connect Rotunda 88 Digital Multimeter 105-00053 or equivalent between harness connector C277, Pin 10 (Circuit 523-R/PK) and Pin 3 (Circuit 519 — LG/BK). • Set the meter to the frequency counter (Hz) setting. • Gradually spin the rear wheels. • **Does the frequency increase as the rear wheel speed increases?**	Yes ▶ No ▶	Anti-lock electronic control module is receiving a proper signal. REFER to Section 13-01. GO to Pinpoint Test K, Step **K11**.

REMOVAL AND INSTALLATION

Brake Booster, Power

Refer to Section 06-07A, Section 06-07B or Section 06-07C.

Brake Master Cylinder

Refer to Section 06-06.

Brake Master Cylinder With Fluid Level Switch Reservoir

Refer to Section 06-06.

Control Module, Anti-Lock Electronic

Removal

1. Disconnect the wiring harness from the anti-lock electronic control module (2C018) by pressing the plastic tab on the connector and pulling the connector off.
2. Remove the two screws that retain the anti-lock electronic control module to the instrument panel (04320). Remove the anti-lock electronic control module.

Installation

1. Follow removal procedure in reverse order, followed by a system check for proper operation.
2. Tighten screws to 2.1-2.9 N·m (19-25 lb-in).

REMOVAL AND INSTALLATION (Continued)

Anti-Lock Electronic Control Module Location

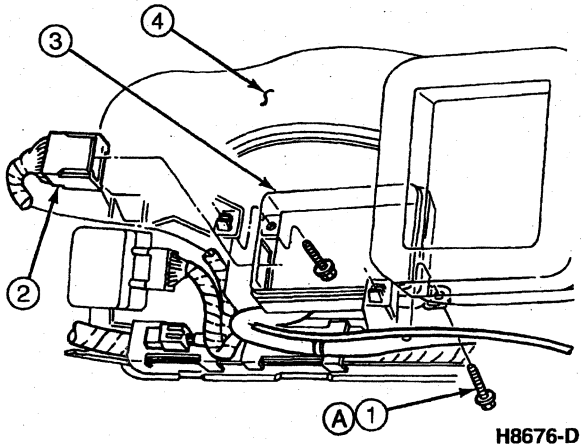

H8676-D

Item	Part Number	Description
1	N803876-S36	Screws
2	—	Wiring Harness (Part of 14401)
3	2C018	Anti-Lock Electronic Control Module
4	04320	Instrument Panel
A	—	Tighten to 2.1-2.9 N·m (19-25 Lb-In)

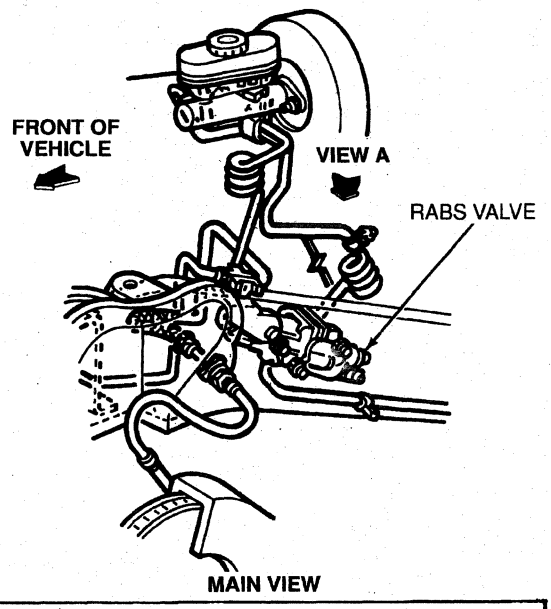

MAIN VIEW

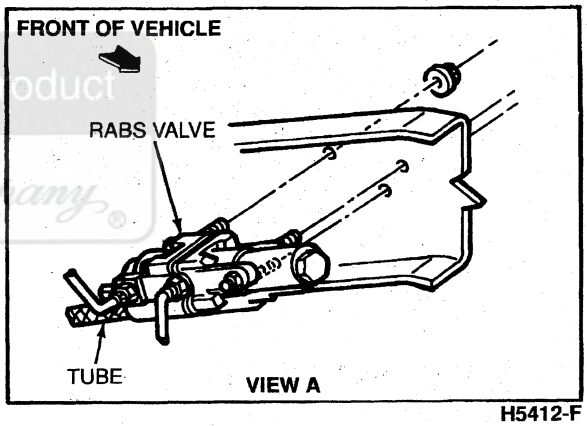

H5412-F

RABS Valve

Removal

1. Disconnect the inlet and outlet brake lines from the RABS valve. Cap the lines.
2. Disconnect the wiring harness to the RABS valve.
3. Remove the three nuts retaining the RABS valve to the frame rail and remove the RABS valve.

Installation

1. Position the RABS valve on the frame rail. Install the three nuts and tighten to 17-23 N·m (12-17 lb-ft).
2. Connect the RABS valve wiring harness connector.
3. **CAUTION: Do not overtighten the fittings.**

   Connect the brake lines to the RABS valve and tighten as follows:

   a. 1/2-20 threaded fittings use 14-23 N·m (11-17 lb-ft)

   b. 7/16-24 threaded fittings use 14-20 N·m (11-15 lb-ft)
4. Bleed the brake system. Refer to Section 06-06. It is not necessary to energize the valve electrically to bleed the rear wheel cylinders (2261).

RABS Sensor

Removal

1. Pull the wiring harness connector off.
2. Remove the RABS sensor hold-down bolt and remove the RABS sensor from the rear axle housing (4010).

Installation

1. Clean the axle mounting surface. Use care to prevent dirt from entering the rear axle housing.
2. Inspect and clean the magnetized RABS sensor pole piece to make sure it is free from loose metal particles that could cause erratic system operation. Inspect the RABS sensor O-ring for damage and replace if necessary.

Unauthorized Product

REMOVAL AND INSTALLATION (Continued)

3. NOTE: Do not apply force to the plastic RABS sensor connector. The RABS sensor flange should slide to the mounting surface. The air gap setting is between 0.127-1.14 mm (0.005-0.045 inch).

   Lightly lubricate the RABS sensor O-ring with motor oil. Align the RABS sensor bolt hole, and install.
4. Install the RABS sensor hold-down bolt and tighten to 34-41 N·m (25-30 lb-ft).
5. Inspect the blue RABS sensor connector seal and replace if missing or damaged. Push the connector on the RABS sensor.

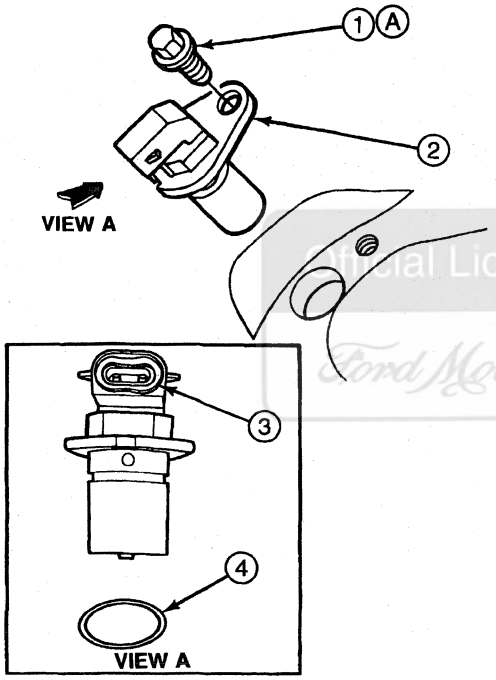

H6309-E

Item	Part Number	Description
1	390356	RABS Sensor Hold-Down Bolt
2	2L373	Sensor
3	—	Connector Seal (Part of 2L373)
4	NBR017	O-Ring
A	—	Tighten to 34-41 N·m (25-30 Lb-Ft)

Sensor Indicator, Anti-Lock Brake, Rear

Refer to Section 13-01.

Stoplight Switch

Refer to Section 17-01.

ADJUSTMENTS

Brake System Bleeding

Refer to Section 06-06.

Brake Master Cylinder Reservoir Checking and Filling

WARNING: BRAKE FLUID CONTAINS POLYGLYCOL ETHERS AND POLYGLYCOLS. AVOID CONTACT WITH EYES. WASH HANDS THOROUGHLY AFTER HANDLING. IF BRAKE FLUID CONTACTS EYES, FLUSH EYES WITH RUNNING WATER FOR 15 MINUTES. GET MEDICAL ATTENTION IF IRRITATION PERSISTS. IF TAKEN INTERNALLY, DRINK WATER AND INDUCE VOMITING. GET MEDICAL ATTENTION IMMEDIATELY.

WARNING: IF YOU USE A BRAKE FLUID THAT IS NOT DOT 3, YOU WILL CAUSE PERMANENT DAMAGE TO THE SYSTEM.

CAUTION: If brake fluid is spilled on painted surfaces, it must be flushed and wiped away immediately. Brake fluid can dissolve the paint finish on the vehicle.

NOTE: Do not fill the reservoir above the MAX line.

The brake fluid level should be at or near the MAX mark.

1. Carefully clean and remove the cap from the brake master cylinder reservoir.
2. Fill the brake master cylinder reservoir to the MAX line with Ford High-Performance DOT 3 Brake Fluid C6AZ-19542-AA or equivalent DOT 3 fluid meeting Ford specification ESA-M6C25-A.

   If the fluid level is excessively low, below the seam or ridge on the outside of the brake master cylinder reservoir, inspect the brake system. Refer to Section 06-00.

SPECIFICATIONS

LUBRICANT/ADHESIVE/CLEANER SPECIFICATIONS

Description	Part Number	Ford Specification
High-Performance DOT 3 Brake Fluid	C6AZ-19542-AA	ESA-MGC25-A or DOT 3

Official Licensed Product Ford Motor Company

SPECIFICATIONS (Continued)

TORQUE SPECIFICATIONS

Description	N·m	Lb-Ft	Lb-In
Anti-Lock Electronic Control Module Mounting Screws	2.1-2.9	—	19-25
RABS Valve Mounting Nuts	17-23	12-17	—
1/2-20 Threaded Brake Line Fittings	14-23	11-17	—
7/16-24 Threaded Brake Line Fittings	14-20	11-15	—
RABS Sensor Hold-Down Bolt	34-40	25-30	—

SPECIAL SERVICE TOOLS/EQUIPMENT

ROTUNDA EQUIPMENT

Model	Description
105-00053	88 Digital Multimeter

Official Licensed Product
Ford Motor Company

GROUP

STEERING SYSTEM 11

SECTION TITLE	PAGE
STEERING COLUMN	11-04-1
STEERING COLUMN SWITCHES	11-05-1
STEERING GEAR, INTEGRAL POWER, ROSS TAS40	11-02D-1
STEERING GEAR, POWER, FORD	11-02B-1
STEERING LINKAGE	11-03-1
STEERING PUMP, POWER, C-II	11-02A-1
STEERING PUMP, POWER, ZF	11-02C-1
STEERING SYSTEM, SERVICE	11-00-1

SECTION 11-00 Steering System, Service

Official Licensed Product
Ford Motor Company

SUBJECT	PAGE
VEHICLE APPLICATION	11-00-1
DESCRIPTION AND OPERATION	
Identification	11-00-2
Steering Gear Model	11-00-2
DIAGNOSIS AND TESTING	
Steering System	11-00-2
Inspection and Verification	11-00-2
Pinpoint Tests	11-00-5
Symptom Chart	11-00-2
SERVICE PROCEDURES	
Clear Vision	11-00-15
External Leakage	11-00-12
Fill Procedure	11-00-16
Fluid Leak	11-00-13
Preliminary Procedures	11-00-11
Air Bleeding	11-00-11
Fluid Level	11-00-11
Pump Belt	11-00-11
Priming, Power Steering Pump	11-00-17
Pump Flow and Pressure Tests	11-00-12
SERVICE PROCEDURES (Cont'd.)	
F-250 Heavy Duty, F-350 and F-Super Duty Chassis Cab	11-00-12
F-Super Duty Motorhome Chassis Vehicles	11-00-13
Purging Power Steering System of Air	11-00-15
Air Purge With External Vacuum Source Procedure	11-00-15
Fluid Level Top-Off Procedure	11-00-15
Start-Up Procedure After Power Steering Pump or Gear Service	11-00-16
Steering Column Bearing	11-00-15
Steering Linkage	11-00-15
Turning Effort Check, Power Steering	11-00-12
CLEANING AND INSPECTION	
Steering Gear	11-00-18
Steering Pump, Power	11-00-17
SPECIFICATIONS	11-00-19
SPECIAL SERVICE TOOLS/EQUIPMENT	11-00-20

VEHICLE APPLICATION

F-250 Heavy Duty, F-350 and F-Super Duty Chassis Cab and Motorhome Chassis

DESCRIPTION AND OPERATION

Identification

Steering Gear Model

Steering gears (3504) are identified by a service identification tag fastened to the assembly. Tags contain information shown in the following illustration.

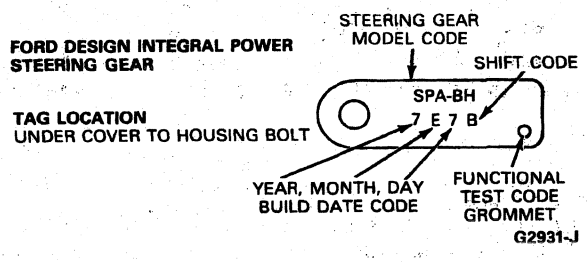

F-Super Duty Motorhome Chassis vehicles use the TAS40 model steering gear. Ford part numbers and build date are stamped on the bottom of the steering gear, opposite the input shaft.

DIAGNOSIS AND TESTING

Steering System

Inspection and Verification

Make the following preliminary checks before servicing the steering system. If hoses are to be disconnected, label them prior to removal so they can be easily identified for reassembly.

1. Verify the customer's original concern by operating the steering system while driving to duplicate the condition.
2. Inspect to determine if any of the following mechanical concerns apply:

VISUAL INSPECTION CHART

Mechanical
• Tire pressure, loose wheels
• Loose tie rod ends
• Loose suspension ball joints
• Loose connecting bolts on column intermediate shaft
• Loose steering gear assembly
• Improper drive belt tension
• Binding or misaligned steering column
• Power steering pump, fluid level, hose leak or line restrictions

Fluid Level Check

The fluid level can be checked either hot or cold, but use the appropriate mark on the dipstick. Check for bubbles in the fluid when taking a fluid level reading. If bubbles are evident, refer to Purging Power Steering System of Air in the Service Procedures portion of this section. If a low level is indicated on the dipstick, add Motorcraft MERCON® ATF XT-2-QDX or MERCON® equivalent.

Symptom Chart

STEERING SYSTEM PROBLEMS

Condition	Possible Source	Action
• Power Steering Pump Leaks	• Leaking cap and dipstick or overfilled power steering oil reservoir.	• CHECK for indications of false leakage — overfilled power steering oil reservoir, improperly installed, damaged or lost cap or dipstick.
	• Loose or damaged power steering pressure hose connections.	• GO to Pinpoint Test B.
	• Leakage between power steering oil reservoir and power steering pump housing.	• REPLACE power steering pump as required.
	• Leakage at pump shaft seal area.	• REPLACE shaft seal or power steering pump.

DIAGNOSIS AND TESTING (Continued)

STEERING SYSTEM PROBLEMS (Continued)

Condition	Possible Source	Action
• Noise in Steering Column — Squeak or Creak	• Steering column cover interference. • Noisy clockspring. • Loose steering column mounting bolts.	• ADJUST or REPOSITION as required. • INSTALL new clockspring. • TIGHTEN to specification.
• Noise in Steering Column — Clunk	• Steering column intermediate shaft coupling bottoming. • Loose steering column intermediate shaft coupling to steering column bolt. • Improperly adjusted steering gear.	• ALIGN or ADJUST as required. • TIGHTEN to specification. • ADJUST to specification (meshload only). REFER to Section 11-02B or Section 11-02D.
• Excessive Steering Effort	• Improper / oversized tires. • Tires not uniform. • Improper tire pressure. • Misaligned steering column intermediate shaft coupling (if so equipped) to gear. • Binding condition in steering sector shaft arm drag link or front axle pins, or lack of lubrication. • Bind in front axle spindle thrust bearings (4WD only). • Improperly adjusted steering gear. • Low power steering pump fluid level and possible leak in system. • Power steering pump pressure and flow below specification. • Air in power steering system. • Contaminated fluid, incorrect fluid. • Obstruction within steering gear or power steering return hose and power steering pressure hose (including bent or kinked steel tubing). • Steering gear valve binding (integral power steering). • Interface with rotational portion of column or intermediate shaft. • Ball joints binding.	• INSTALL correct tire and wheel combination. REFER to Section 04-04. • INSTALL correct tire and wheel combination. REFER to Section 04-04. • ADJUST air pressure in tires. GO to Pinpoint Test A. • ALIGN or ADJUST as required. • LUBE, INSPECT, ADJUST or REPLACE as required. REFER to Section 11-03. • LUBE, INSPECT, ADJUST or REPLACE as required. REFER to Group 05 in the Powertrain, Drivetrain Manual. • ADJUST to specification (meshload only). REFER to Section 11-02B or Section 11-02D. • ADD fluid, TIGHTEN connections and CORRECT as necessary. • CONDUCT pump flow and pressure tests in this section and ADJUST or SERVICE as necessary. • ADD fluid, TIGHTEN connections and BLEED system. • REPLACE with specified fluid. • INSPECT, REMOVE obstruction(s) and SERVICE or REPLACE as required. • INSPECT, SERVICE or REPLACE as required. • TIE back as required. • INSPECT for freedom of motion. SERVICE or REPLACE as required.

Official Publication
Ford Motor Company

DIAGNOSIS AND TESTING (Continued)

STEERING SYSTEM PROBLEMS (Continued)

Condition	Possible Source	Action
• Wanders Side to Side — Loose Steering	• Vehicle overloaded or unevenly loaded.	• CORRECT as required.
	• Improper (mismatched) tires and wheels.	• INSTALL correct tire and wheel combination. REFER to Section 04-04.
	• Improper tire pressure.	• ADJUST air pressure in tires.
	• Loose steering gear mounting.	• TIGHTEN to 73-89 N·m (54-66 lb-ft).
	• Front and rear suspension components loose, worn or exhibit damaged condition.	• TIGHTEN or REPLACE as necessary. REFER to Group 04.
	• Loose, worn or damaged steering sector shaft arm drag link.	• TIGHTEN or REPLACE as necessary. REFER to Section 11-03.
	• Loose wheel lug nuts.	• TIGHTEN to specifications.
	• Spindle pin binding.	• LUBRICATE suspension. REFER to Group 04.
	• Improperly adjusted front wheel bearing.	• ADJUST to specification.
	• Steering column intermediate shaft coupling fractured.	• REPLACE as required.
	• Incorrect toe setting.	• SET to specifications. REFER to Section 00-04.
	• Improperly adjusted steering gear.	• ADJUST to specification (meshload only). REFER to Section 11-02B or Section 11-02D.
	• Steering column misaligned.	• REFER to Section 11-04.
	• Steering column components loose or exhibit excessive play.	• REPAIR as required. GO to Pinpoint Test A.
• Pulls to One Side	• Improperly sized tires.	• INSTALL correct tire and wheel combination.
	• Improper tire pressure.	• ADJUST air pressure in tire. REFER to Section 04-04.
	• Unevenly loaded vehicle.	• CORRECT as required.
	• Improper brake operation or adjustment.	• INSPECT, ADJUST and CORRECT as required. REFER to Group 06.
	• Improperly adjusted front wheel bearing, or worn or damaged rear wheel bearing.	• ADJUST or REPLACE as required. REFER to Group 04 or Group 05.
	• Broken or sagging front spring or rear spring.	• INSPECT and REPLACE as required. REFER to Group 04.
	• Loose steering gear mountings.	• TIGHTEN to specification.REFER to Section 11-02B or Section 11-02D.
	• Loose, worn or damaged steering sector shaft arm drag link.	• TIGHTEN and REPLACE as required. REFER to Section 11-03.
	• Bent front wheel spindle.	• INSPECT and REPLACE as required.
	• Bent rear axle housing or loose rear spring, shock absorber and suspension arm attaching points.	• INSPECT, TIGHTEN and REPLACE as required. REFER to Group 04.
	• Frame or underbody out of alignment.	• CORRECT as required. REFER to Section 02-01.
	• Misaligned front wheel.	• SET to specification. REFER to Section 04-00.
	• Belts on tires misaligned.	• REPLACE as required. REFER to Section 04-04.
	• Steering gear valve binding or out of balance.	• CLEAN and REPLACE as necessary. REFER to Section 11-02B or Section 11-02D.
		• GO to Pinpoint Test C.

Official Ford Product
Ford Motor Company

DIAGNOSIS AND TESTING (Continued)

STEERING SYSTEM PROBLEMS (Continued)

Condition	Possible Source	Action
• Returnability Poor	• Improper tire pressure.	• ADJUST air pressure in tires. REFER to Section 04-04.
	• Binding steering sector shaft arm drag link or lack of lubrication.	• LUBE, ADJUST or REPLACE as required. REFER to Section 11-03.
	• Spindle pin binding.	• LUBRICATE suspension. REFER to Group 04.
	• Tight front axle spindles.	• LUBE, CORRECT as required.
	• Bind in front wheel bearings.	• LUBE, CORRECT as required. REFER to Group 04.
	• Improperly adjusted toe.	• ADJUST as required.
	• Improperly adjusted steering gear.	• ADJUST to specification (meshload only). REFER to Section 11-02B or Section 11-02D.
	• Kinked power steering return hose.	• INSPECT and SERVICE or REPLACE as required.
	• Obstruction with steering gear or power steering return hose / power steering pressure hose.	• INSPECT, REMOVE obstructions and SERVICE or REPLACE as required.
	• Binding steering linkage, connecting rods or ends.	• SERVICE or REPLACE as required. REFER to Section 11-03.
• Shaking Transmission Column Shift Selector Tube	• Engine out of tune.	• TUNE engine. REFER to Group 03 in the Powertrain, Drivetrain Manual.
	• Worn or damaged steering column, adjacent sheet metal, shift tube bushing or shift linkage.	• SERVICE or REPLACE the column and components as required. REFER to Section 11-04.
	• Alignment and movement — engine and transmission insulators and mounts.	• SERVICE, REPLACE or ADJUST as required. REFER to Section 02-03 in the Powertrain, Drivetrain Manual.
	• Damaged or twisted steering gear sector shaft.	• REPLACE steering gear sector shaft.
• Clear Vision Complaint — Steering Wheel Spokes Obscure View of Instrument Panel with Wheels in Straight-Ahead Position	• Damaged or twisted steering gear sector shaft.	• REPLACE steering gear sector shaft.
	• Toe out of adjustment.	• ADJUST toe setting. REFER to Section 04-00.
• Power Steering or Accessory Belt Squealing	• Check belt for proper tension or glazing.	• TIGHTEN or REPLACE belt as required. REFER to Section 03-05 in the Powertrain, Drivetrain Manual.
• Power Steering Pump Noisy	• Low fluid level and possible leakage.	• REFILL to specified level. PURGE air from system. CHECK for leaks. SERVICE as required. If noise persists, REPLACE power steering pump.
• Swish Type Noise	• Fluid flow into the bypass valve of the pump valve housing with fluid temperature below 55°C (130°F).	• Normal noise.
• Whine Type Noise	• Aerated fluid or cam contour damaged.	• PURGE system of air. If condition not resolved, REPLACE pump. GO to Pinpoint Test D.
	• Worn or damaged valve O-ring seal.	

Official Product Ford Motor Company

Pinpoint Tests

PINPOINT TEST A: STEERING VERY DIFFICULT OR VERY EASY

Test Step		Result ▶	Action to Take
A1	INSPECT TIRES		
	• Check tire pressure for overinflation or underinflation. • **Are all tires inflated to specification?**	Yes ▶	GO to **A2**.
		No ▶	ADJUST tire pressure to specifications listed on sidewall. RETEST steering effort.

DIAGNOSIS AND TESTING (Continued)

PINPOINT TEST A: STEERING VERY DIFFICULT OR VERY EASY (Continued)

Test Step		Result ▶	Action to Take
A2	CHECK DRIVE BELT		
	• Check condition and tension of drive belt. • **Is drive belt OK?**	Yes ▶ No ▶	GO to **A3**. REPLACE drive belt. REFER to Section 03-05 in the Powertrain, Drivetrain Manual. RETEST steering effort.
A3	CHECK POWER STEERING PUMP		
	• Check power steering fluid condition and level. • Check power steering pump for leakage. • Perform power steering pump flow and pressure tests. • **Is power steering pump OK?**	Yes ▶ No ▶	GO to **A4**. REPLACE power steering pump as necessary. REFER to Section 11-02A or Section 11-02C. RETEST steering effort. GO to **A4**.
A4	SUSPENSION		
	• Check for broken or sagging springs on front and rear suspension. • **Is suspension OK?**	Yes ▶ No ▶	GO to **A5**. REPLACE broken or compressed springs. REFER to Group 04.
A5	STEERING LINKAGE		
	• Visually check linkage with assistant turning steering wheel from stop to stop. Check for binding or lack of smooth operation. • **Does steering linkage move smoothly from stop to stop?**	Yes ▶ No ▶	GO to **A6**. REPLACE any damaged steering linkage component. REFER to Section 11-03. RETEST steering effort.
A6	STEERING PIVOT TESTING		
	• Check ball joints or spindle pins for binding, lack of lubrication or worn surfaces. Refer to Section 04-01A (4x2) or Section 04-01B (4x4). • **Are steering pivot points OK?**	Yes ▶ No ▶	GO to **A7**. LUBRICATE components as necessary. REPLACE worn ball joints. REFER to Section 04-01A (4x2) or Section 04-01B (4x4).
A7	STEERING GEAR		
	• Check steering gear for leakage. • Visually check steering gear operation with assistant turning steering wheel from stop to stop. • Check steering gear mounting fasteners for loose bolts. • **Is steering gear OK?**	Yes ▶ No ▶	GO to **A8**. TIGHTEN and REPLACE as necessary. REFER to appropriate section in Group 11. RETEST steering effort.
A8	WHEEL ALIGNMENT		
	• Check wheel alignment for correct caster, toe and camber. Refer to Section 04-00. • **Is wheel alignment OK?**	Yes ▶ No ▶	If condition still exists, REFER to symptom chart. PERFORM wheel alignment. REFER to Section 04-00.

PINPOINT TEST B: PRELIMINARY INSPECTION AND LEAK TESTING

Test Step		Result ▶	Action to Take
B1	PRELIMINARY CHECK		
	• Check the power steering pump belt tension. • Check the tire air pressure. • Check power steering pump for correct model and vehicle application. • **Do components check OK?**	Yes ▶ No ▶	Ford C-II pumps: GO to **B2**. ZF pumps: GO to **B3**. ADJUST or REPLACE as required. REFER to Section 03-05 in the Powertrain, Drivetrain Manual.

Official Licensed Product Motor Company

DIAGNOSIS AND TESTING (Continued)

PINPOINT TEST B: PRELIMINARY INSPECTION AND LEAK TESTING (Continued)

Test Step		Result ▶	Action to Take
B2	FLUID LEVEL CHECK, FORD C-II PUMP		
	NOTE: After any major power steering system component replacement, the system must be purged of all old fluid and replaced with new fluid. NOTE: Fluid level can be checked when fluid is either hot or cold. ● If fluid is cold (approximately 24°C [75°F]), use cold full mark on dipstick. ● If fluid is hot (approximately 77°C [177°F]), use hot full mark on dipstick. ● **Is fluid level correct without any signs of air bubbles in fluid?**	Yes ▶ No ▶	GO to **B5**. ADD Motorcraft MERCON® ATF XT-2-QDX or MERCON® equivalent. Do not overfill the reservoir. GO to **B4** for bleed procedure if bubbles are still present.
B3	FLUID LEVEL CHECK, ZF PUMP		
	NOTE: After any major power steering system component replacement, the old fluid must be purged and replaced with new fluid. ● Key off. ● Remove the power steering pump oil reservoir filler cap and check the level on the dipstick. Use the cold mark if fluid is at room temperature (20°C [70°F]). Use the hot mark if the fluid is at normal operating temperature (80°C [175°F]). ● **Is the fluid level correct without any signs of air bubbles in fluid?**	Yes ▶ No ▶	GO to **B6**. ADD Motorcraft MERCON® ATF XT-2-QDX or MERCON® equivalent. DO NOT OVERFILL the power steering oil reservoir. GO to **B4** for bleed procedure if bubbles are present.
B4	BLEED AIR FROM SYSTEM		
	● Fill power steering oil reservoir. ● Operate engine until it reaches normal operating temperature. ● Turn steering wheel to the left and right several times without hitting stops. ● Recheck fluid level in power steering oil reservoir and fill if required. ● **Are air bubbles still present in fluid?**	Yes ▶ No ▶	PURGE air from system. REFER to Purging Power Steering System of Air in the Service Procedures portion of this section. ZF pumps: GO to **B6**. Ford C-II pumps: GO to **B5**.
B5	EXTERNAL LEAK CHECK		
	● Key off. ● Wipe off power steering pump, power steering pressure hose, power steering return hose and steering gear. ● Key on, engine running. **CAUTION: Do not hold the steering wheel in the far left or right position, or damage to the power steering pump may result.** ● Turn the steering wheel from stop to stop several times. ● **Can leak location be detected?**	Yes ▶ No ▶	REPLACE power steering pump. REFER to External Leakage in the Service Procedures portion of this section.
B6	EXTERNAL LEAK CHECK, STEERING GEAR AND PUMP		
	● Key off. ● Wipe off power steering pressure hoses, power steering return hose, steering gear and power steering oil reservoir. ● Mix one teaspoon of oil-soluble aniline dye into power steering oil reservoir and fill power steering oil reservoir to specifications as required. ● Key on, engine running at 1000-1500 rpm. ● Turn steering wheel all the way to the left and right several times. **CAUTION: Do not hold steering wheel in the far left or right position, or damage to power steering pump may result.** ● Key off. ● **Do reservoir or outlets leak?**	Yes ▶ No ▶	CHECK power steering return line clamp for proper installation and reservoir ports for cracks. SERVICE or REPLACE as required. GO to **B7**. If power steering pump oil reservoir filler cap or dipstick leaks, CHECK power steering pump oil reservoir filler cap for good seal and tight fit. REPLACE if damaged or broken. GO to **B7**.

Official Licensed Product Ford Motor Company

DIAGNOSIS AND TESTING (Continued)

PINPOINT TEST B: PRELIMINARY INSPECTION AND LEAK TESTING (Continued)

Test Step		Result ▶	Action to Take
B7	FITTINGS AND O-RING LEAK INSPECTION		
	• Clean the outside of the steering gear, the bottom surface of the power steering pump, and all lines and fittings. **CAUTION: Do not tighten the fittings with a standard open-end wrench.** • Tighten all fittings using a flare-nut wrench. • **Do tube seats leak?**	Yes ▶ No ▶	REPLACE tube seat. System OK.

PINPOINT TEST C: POWER STEERING SYSTEM TESTS, F-250 HEAVY DUTY, F-350 AND F-SUPER DUTY CHASSIS CAB

Test Step		Result ▶	Action to Take
C1	FLOW RATE AND PRESSURE CHECK		
	• Remove the power steering pressure hose from the power steering pump and connect it into the appropriate adapter of the analyzer. • Thread the other adapter of the analyzer into the power steering pump. • Connect the analyzer to the adapters and tighten both to 20 N·m (15 lb-ft). NOTE: The analyzer may be connected at alternate points between the power steering pump and the steering gear. • Add power steering fluid to the power steering pump as required. • Start engine and run at idle for approximately 2 minutes. • Record the flow and pressure at 74-79°C (165-175°F). • **Is the pressure above 1034 kPa (150 psi)?**	Yes ▶ No ▶	CHECK for worn or damaged steering gear, restricted gear passages or restricted power steering hoses. SERVICE or REPLACE as required. GO to **C2.**
C2	FLOW RATE CHECK, GATE VALVE PARTIALLY CLOSED		
	• Partially close the shutoff valve and allow the pressure to build to 5102 kPa (740 psi) for C-II pump. Record the flow at 74-79°C (165-175°F). • **Is the flow rate below specifications?**	Yes ▶ No ▶	REPLACE pump. REFER to Section 11-02A or Section 11-02C. GO to **C3.**
C3	PRESSURE CHECK, GATE VALVE OPENED AND CLOSED		
	CAUTION: Do not allow the shutoff valve to remain closed for more than 5 seconds. • Completely close and partially open the shutoff valve three times. **CAUTION: Do not allow fluid temperature to exceed 93.4°C (200°F) during the test. Allow fluid to cool to 54.4°C (130°F) before resuming test if overheating occurs.** • Record the pressure. • **Is pressure within specifications?**	No ▶ Yes ▶	REPLACE power steering pump. GO to **C4.**
C4	FLOW RATE CHECK, ENGINE RUNNING AT 1500 RPM		
	• Increase engine speed to 1500 rpm. • Record free flow rate and compare it with the flow rate measured in Step C1. • **Is the flow rate within 3.8 liters/min. (1 gallon/min.) of the flow rate measured in Step C1?**	Yes ▶ No ▶	GO to **C5.** REPLACE the power steering pump.

Official Licensed Product Ford Motor Company

DIAGNOSIS AND TESTING (Continued)

PINPOINT TEST C: POWER STEERING SYSTEM TESTS, F-250 HEAVY DUTY, F-350 AND F-SUPER DUTY CHASSIS CAB (Continued)

Test Step		Result ▶	Action to Take
C5	PRESSURE AND FLOW RATE CHECK, STEERING WHEEL TURNED FROM STOP TO STOP		
	• Turn the steering wheel from the left stop to the right stop. • Record the pressure and the flow rate. • **Is the recorded pressure approximately the same as the pressure recorded in Step C3 and does the flow rate drop below 1.9 liters/min. (0.5 gallons/min.)?**	Yes ▶ No ▶	GO to **C6**. Excessive internal leakage in gear. SERVICE or REPLACE steering gear.
C6	BACK PRESSURE CHECK		
	• Turn steering wheel slightly in both directions and release quickly while observing the pressure gauge. • **Does the needle return to normal back-pressure reading and snap back as the wheel is released?**	Yes ▶ No ▶	System is OK. CHECK the steering column for free rotation before disassembling the steering gear. SERVICE the steering gear for sticking rotary valve as required. GO to **C7**.
C7	BALL JOINT AND LINKAGE CHECK		
	• Turn steering wheel slightly in both directions and release quickly while observing the pressure gauge. • **Does the needle move from the normal back-pressure reading and snap back as the steering wheel is released?**	Yes ▶ No ▶	System is OK. SERVICE the front wheel spindle inner connecting rod ends or ball joints or the steering sector shaft arm drag link, as required.

Official Licensed Product Ford Motor Company

PINPOINT TEST D: POWER STEERING SYSTEM TESTS, F-SUPER DUTY MOTORHOME CHASSIS VEHICLES

Test Step		Result ▶	Action to Take
D1	PRELIMINARY CHECK		
	• Remove the pressure fitting from the power steering pump and connect it into the appropriate adapter of the analyzer. NOTE: Be sure analyzer line at shutoff valve end is connected to steering gear end of vehicle power steering system. • Connect the analyzer to the adapters and tighten both to 41-54 N·m (30-38 lb-ft). • Add power steering fluid to the power steering pump as required. NOTE: Check the gauge needle for excessive vibration. This indicates that air is still in the system. If so, repeat the purging procedure until excessive needle vibration no longer exists. • Fully open shutoff valve, start engine and turn steering wheel to full left and right stops to purge air from system. • Install thermometer in power steering oil reservoir and connect tachometer to engine. • Align front wheels in straight-ahead position, place transmission in NEUTRAL, and set the parking brake. • Partially close pressure line shutoff valve until pressure rises to 5516-6900 kPa (800-1000 psi). • Fully open shutoff valve when fluid in power steering oil reservoir reaches 50°C (120°F). • Increase engine speed to 2200 rpm. • Record flow rate and pressure at 55°C (130°F). • **Is flow rate below 13.2 liters/min. (3.5 gallons/min.)?**	Yes ▶ No ▶	CHECK if the correct power steering pump is installed. GO to **D3**. If pressure exceeds 552 kPa (80 psi), GO to **D2**.
D2	LINE CHECK		
	• Check lines for kinks or obstructions. • **Do lines check OK?**	Yes ▶ No ▶	GO to **D3**. SERVICE or REPLACE as required.

DIAGNOSIS AND TESTING (Continued)

PINPOINT TEST D: POWER STEERING SYSTEM TESTS, F-SUPER DUTY MOTORHOME CHASSIS VEHICLES (Continued)

Test Step		Result ▶	Action to Take
D3	MINIMUM PUMP FLOW CHECK		
	• Decrease engine speed to 600 rpm. • Slowly close shutoff valve until pressure rises to 8274 kPa (1200 psi). • Record flow rate at 55°C (130°F). • **Is flow rate below 8.3 liters/min. (2.2 gallon/min.)?**	Yes ▶ No ▶	VERIFY correct power steering pump is installed. SERVICE or REPLACE power steering pump as required. GO to **D4**.
D4	RELIEF PRESSURE CHECK, LOW RPM		
	• Maintain engine speed at 600 rpm. • Close shutoff valve. (The flow rate should be zero.) • Record pressure. • Open shutoff valve quickly. (Flow rate should return to normal.) • **Is the recorded pressure below 11.6 MPa (1680 psi) or above 12.4 MPa (1800 psi)?**	Yes ▶ No ▶	REPLACE power steering pump as required. GO to **D5**.
D5	FLOW RATE CHECK, POWER STEERING PUMP		
	• Allow power steering pump fluid to cool to 55°C (130°F). • Increase engine speed to full governed rpm. • Close shutoff valve. (The flow rate should be zero.) • Open shutoff valve quickly. (Flow rate should return to normal.) • Close and open the shutoff valve again, but do not allow the fluid temperature to exceed 95°C (200°F). • **Does the flow rate return to normal immediately after opening the shutoff valve?**	Yes ▶ No ▶	GO to **D6**. REPLACE the power steering pump as required.
D6	RELIEF PRESSURE CHECK		
	WARNING: THE BLOCK USED IN THE FOLLOWING STEP SHOULD BE AT LEAST 25.4 MM (1 INCH) THICK AND LONG ENOUGH TO BE INSERTED WITHOUT DANGER OF PINCHING FINGERS. KEEP FINGERS CLEAR OF PINCH POINTS AND BE SURE BLOCK IS SQUARE TO CONTACT POINTS. • Place a steel block between the axle stop and the adjusting screw. • Make sure that fluid temperature in power steering oil reservoir is 55°C (130°F) and the shutoff valve is totally open. • Turn the steering wheel until the axle stops contact the spacer block. **CAUTION: Do not hold the torque on the steering wheel for more than 5 seconds after the pressure relief setting of the steering gear has been reached. The steering gear could be damaged.** • Apply sufficient torque to the steering wheel so that the power steering pump valve is completely open in the direction of the turn. • **Is the relief pressure reading above 12.4 MPa (1800 psi) or below 11.6 MPa (1680 psi)?**	Yes ▶ No ▶	ADJUST or SERVICE the power steering pump as required. GO to **D7**.

Official Licensed Product

DIAGNOSIS AND TESTING (Continued)

PINPOINT TEST D: POWER STEERING SYSTEM TESTS, F-SUPER DUTY MOTORHOME CHASSIS VEHICLES (Continued)

Test Step		Result	Action to Take
D7	INTERNAL LEAKAGE CHECK, POWER STEERING GEAR, STEERING WHEEL TURNED TO LEFT		
	• Key off. Remove plug from valve body using 26 mm socket. • Insert approximately 3-6 mm of additional shims into the socket portion of the plug to raise the relief bypass valve setting above that of the power steering pump valve. Ordinary 3/8-inch outside diameter flatwashers may be used as shims. • Key on, engine running at idle speed. • Turn steering wheel to the left until axle stop contacts spacer block. **CAUTION: Do not hold the torque on the steering wheel for more than 5 seconds after the pressure relief setting of the steering gear has been reached. The steering gear could be damaged.** • Apply sufficient torque to the steering wheel so that the power steering pump valve is completely open in the direction of the turn. • Record flow rate with system at pump relief level. • **Is the pressure reading below 11.6 MPa (1680 psi) or above 12.4 MPa (1800 psi), and is the flow rate greater than 3.3 liters/min. (3.5 quarts/min.)?**	Yes ▶ No ▶	REPAIR internal leakage in steering gear. GO to **D8**.
D8	INTERNAL LEAKAGE CHECK, POWER STEERING GEAR, STEERING WHEEL TURNED TO RIGHT		
	• Position the spacer block between the right side axle stop and adjusting screw. • Repeat the test procedures in Step D7, but with the steering wheel turned to the right. Observe all cautions. • **Is the pressure reading below 11.6 MPa (1680 psi) or above 12.4 MPa (1800 psi), and is the flow rate greater than 3.3 liters/min. (3.5 quarts/min.)?**	Yes ▶ No ▶	REPAIR internal leakage in steering gear. Gear checks OK.

SERVICE PROCEDURES

Preliminary Procedures

Make the following preliminary checks before power steering disassembly.

Air Bleeding

If bubbles are present in the power steering fluid, bleed the system as follows:

1. Fill power steering oil reservoir (3A697).
2. Run engine until fluid reaches normal operating temperature of 74-79°C (165-174°F).
3. **CAUTION: Do not hold steering wheel (3600) in the far left or right position; damage to power steering pump (3A674) can result.**

   Turn steering wheel all the way to the left and right several times.
4. Check fluid level.
5. If air is still trapped in system, refer to Purging Power Steering System of Air in the Service Procedures portion of this section.

Fluid Level

1. **CAUTION: Do not hold steering wheel in the far left or right position, or damage to power steering pump may result.**

   Idle engine for two to three minutes. Turn steering wheel all the way to the left and right several times to warm fluid to 43-49°C (109-120°F).
2. **CAUTION: Do not overfill power steering oil reservoir.**

   Check fluid level in the power steering oil reservoir. Fluid level should be at the COLD FULL mark. If level is low, add Motorcraft MERCON® ATF XT-2-QDX or MERCON® equivalent.

Pump Belt

Replace glazed or worn drive belt (8620). Refer to Section 03-05 in the Powertrain, Drivetrain Manual.

SERVICE PROCEDURES (Continued)

Turning Effort Check, Power Steering

SPECIAL SERVICE TOOL(S) REQUIRED

Description	Tool Number
Spring Scale	T74P-3504-Y

Make sure front wheels (1007) are properly aligned and tire pressure is correct before checking turning effort.

1. Park vehicle on dry concrete and set parking brake.
2. Idle engine for 2-3 minutes. Turn steering wheel (3600) to the left and right several times to warm fluid to 43-49°C (109-120°F).
3. With engine running, attach Spring Scale T74P-3504-Y to rim of steering wheel. Measure pull required to turn steering wheel one complete revolution in each direction. Using a suitable scale, specification should be 3 N (0.7 lb) or less. If this is exceeded, refer to Excessive Steering Effort in the symptom chart in this section.

External Leakage

When looking for leaks, use this procedure to pinpoint the exact cause and location to avoid misdiagnosis.

1. Check for overfilled power steering oil reservoir (3A697).
2. Wipe suspected area dry.
3. Check for power steering pump overflow and aeration.
4. Check for exact source. For example, oil might be running down from another area (engine, etc.) and drip might not be leak point.
5. **CAUTION: Do not hold steering wheel (3600) in the far left or right position; damage to power steering pump (3A674) can result.**

   Cycle the steering wheel from stop to stop ten times and check for leaks.
6. **CAUTION: Do not hold the steering wheel against a stop for more than 3-5 seconds at a time; damage to power steering pump can result.**

   Some leaks are high-pressure leaks and might require holding steering wheel against stops to seep out. Refer to Fluid Leak in the Service Procedures portion of this section.

Pump Flow and Pressure Tests

The pump flow and pressure tests will confirm or rule out the power steering pump (3A674) as the cause of steering system problems.

Prior to performing the pump flow and pressure tests, perform Pinpoint Test A in this section.

If the system tests OK, or the concerns have been corrected and the loss of assist still exists, test the power steering pump flow and pressure to determine whether the trouble is in the power steering pump, steering gear (3504) or power steering pump valve (3A561) using the following test equipment.

F-250 Heavy Duty, F-350 and F-Super Duty Chassis Cab

Test Equipment

- engine tachometer
- thermometer — -17°C to 140°C (0°F to 300°F)
- Power Steering Analyzer D81T-33610-A (Rotunda Model 014-00230) or equivalent
- one set of adapter fittings

Test Procedure

CAUTION: Possible contamination of the power steering system fluid can cause permanent damage to gauges and instruments incorporated in the analyzer.

This procedure used in conjunction with Power Steering Analyzer D81T-33610-A (Rotunda Model 014-00230) or equivalent provides a method for checking the complete power steering system. The analyzer can be used to determine the cause of hard steering or lack of assist problems. The analyzer provides readouts for the following:

- system back pressure
- pump flow
- steering gear internal leakage
- power steering pump valve and cylinder internal leakage

Interpretation of the above readouts will determine which of the following conditions or components are the cause of the problem:

- restriction in hoses or fittings
- control valve and cylinder
- sticking gear valve
- inefficient pump cam pack
- sticking relief valve
- binding in suspension

Official Licensed Reproduction

SERVICE PROCEDURES (Continued)

F-Super Duty Motorhome Chassis Vehicles

Test Equipment

CAUTION: Contamination of the power steering system fluid can cause permanent damage to gauges and instruments incorporated in the analyzer.

Power Steering Analyzer D81T-33610-A (Rotunda Model 014-00230) or equivalent is to be used when the power steering system is suspected of erratic steering operation or insufficient power assist, and neither power steering pump nor steering gear have sustained failure or internal damage that can contaminate the fluid in the steering system. The analyzer consists of a pressure gauge, flow meter, shutoff valve, thermometer, hose and adapter attachments.

Test Procedures

Refer to Pinpoint Test D for testing procedures.

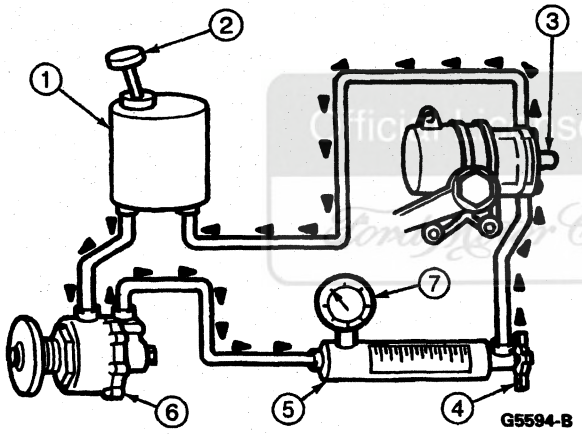

Item	Part Number	Description
1	3A697	Power Steering Oil Reservoir
2	—	Thermometer
3	3504	Steering Gear
4	—	Shutoff Valve (Part of D81T-33610-A)
5	D81T-33610-A	Flow Meter (Analyzer)
6	3A674	Power Steering Pump
7	—	Gauge (Part of D81T-33610-A)

(Continued)

Fluid Leak

1. **CAUTION: Do not hold steering wheel (3600) in the far left or right position; damage to power steering pump (3A674) can result.**

   With engine idling, turn steering wheel left to right several times from stop to stop. Check all possible leakage points.
2. Tighten all loose fittings. Replace damaged lines and seals.

Official Licensed Product Ford Motor Company

SERVICE PROCEDURES (Continued)

NOTE: For service and replacement procedures in the following chart, refer to Section 11-02B.

Power Steering Integral Gear Leak Inspection

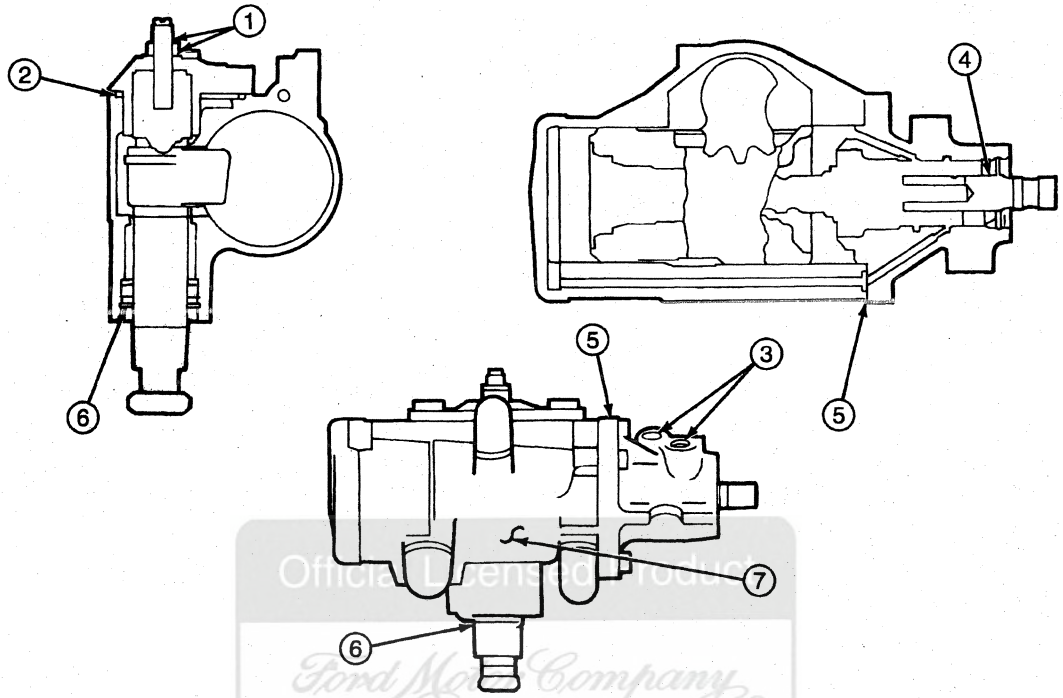

Official Licensed Product
Ford Motor Company

G4192-D

Leak Category	Required Service
1. Sector adjuster	Tighten lock nut to 48-61 N·m (35-45 lb-ft). Replace nut if leakage continues. Check the cover surface for damage.
2. Sector shaft cover	Tighten bolts to 75-94 N·m (55-69 lb-ft). Replace seal. Examine cover and housing for damage when replacing seal.
3. Hose connections	Tighten fitting nuts to 30-40 N·m (22-30 lb-ft). If leakage continues, remove hose and clean interface area. If tube nut threads are damaged, replace hose. If tube seats are damaged, replace tube seat. If housing threads are badly stripped, replace the valve housing only.
4. Steering gear input shaft seal	Replace input shaft seals and snap ring. Check shaft surface for damage. Check housing seal bore for damage.
5. Control valve housing mounting face	Tighten control valve housing bolts to 42-62 N·m (31-46 lb-ft). If leak continues, replace O-ring. Examine sealing surface for damage.
6. Sector shaft seals and snap ring	Replace sector shaft seals. Check seal bore, shaft, and snap ring groove for damage. Check sector housing roller bearing for damage.
7. Gear housing casting	Replace gear housing.

SERVICE PROCEDURES (Continued)

Clear Vision

CAUTION: If clear vision correction is attempted by adjustment of the tie rod adjusting sleeve (3281), grossly misadjusted toe can result.

NOTE: On F-250 Heavy Duty, F-350 and F-Super Duty Chassis Cab, steering wheel clear vision is preset at assembly prior to toe adjustment and cannot be adjusted by removing the steering wheel (3600) and arbitrarily misindexing the steering wheel and center shaft alignment. Improper clear vision is an indication that toe is incorrect.

Refer to Section 11-04 and Section 04-00.

1. Align the front wheels to the straight ahead position. This can most accurately be achieved by driving the vehicle straight for about 16 meters (50 ft).
2. From under the vehicle, remove the bolt which attaches the coupling shaft to the steering gear.
3. Remove the coupling shaft from the steering gear using light force on the yoke with a pry bar or by lightly tapping the yoke with a screwdriver and a hammer.
4. Turn the steering wheel to the straight-ahead position.
5. NOTE: Because of the limitations of tolerance stack-up and the number of splines on the steering gear, it may not be possible to get perfect alignment of the steering wheel. It can usually be adjusted to be within 5° of center when driving straight down the road. The Ford specification is ±10° from straight-ahead position.

   Reinstall the coupling shaft to the steering gear, moving the steering wheel as required to align the coupling shaft splines with the steering gear input shaft splines.
6. Install a new coupling shaft yoke attachment bolt (N803942-S100) and tighten to 41-57 N·m (30-42 lb-ft). If the old bolt is reused, it must be reinstalled with Threadlock® and Sealer EOAZ-19554-AA or equivalent meeting Ford specification WSK-M2G315-A5 (Type II).

Steering Column Bearing

When checking steering wheel (3600) free play, also check for radial play or wobble between the steering wheel and steering column shaft. Any free play detected reflects wear in the steering column bearing (3517) and can add to apparent free play. Refer to Section 11-04 for steering column tube service procedures.

Steering Linkage

Refer to the Symptom Chart and Pinpoint Test A in this section.

Purging Power Steering System of Air

CAUTION: If the air is not purged from the power steering system correctly, a second customer concern or pump failure could result. This condition can occur on pre-delivery vehicles with evidence of aerated fluid or vehicles that have had steering component service.

A whine noise heard from the power steering pump (3A674) may be caused by air in the system. This procedure must be performed under the following conditions:

- prior to any component service where power steering noise complaints are accompanied by evidence of aerated fluid
- after replacement of any power steering system component (gear, hose, etc.)

Fluid Level Top-Off Procedure

1. Check and fill power steering oil reservoir (3A697) to dipstick FULL COLD.
2. Disable ignition by disconnecting the ignition control module (ICM)(12K072).
3. NOTE: On 7.3L diesel vehicles, the oil pressure sensor must be disconnected to prevent starting.

   Crank engine 30 seconds, check fluid level and add if required.
4. **CAUTION: Do not hold steering wheel (3600) in the far left or right position; damage to power steering pump can result.**

   Crank engine 30 seconds while cycling the steering wheel stop to stop.
5. Check fluid level and add fluid if required.

Air Purge With External Vacuum Source Procedure

1. Tightly insert the rubber stopper of the air evacuator assembly into pump reservoir.
2. Reconnect connection used to disable ignition. Start vehicle.
3. Apply 68-84 kPa (20-25 in-Hg) maximum vacuum for minimum of three minutes at idle; maintain maximum vacuum with source.
4. Release vacuum and remove vacuum source.
5. Add fluid to FULL COLD or reservoir center mark.
6. Reinstall vacuum source and apply 68-84 kPa (20-25 in-Hg) vacuum.
7. **CAUTION: Do not hold steering wheel in the far left or right position; damage to power steering pump can result.**

   Cycle steering wheel from stop to stop every 30 seconds for approximately 5 minutes.
8. Shut engine off, release vacuum and remove vacuum source.
9. Add fluid if necessary; install dipstick or power steering pump oil reservoir filler cap (3A006).

Official Licensed Product

SERVICE PROCEDURES (Continued)

10. **CAUTION: Do not hold steering wheel in the far left or right position; damage to power steering pump can result.**

    Start engine and cycle steering wheel from stop to stop every 30 seconds for approximately five minutes.
11. Check for oil leaks at all connections.
12. In severe cases, it might be necessary to repeat procedure.

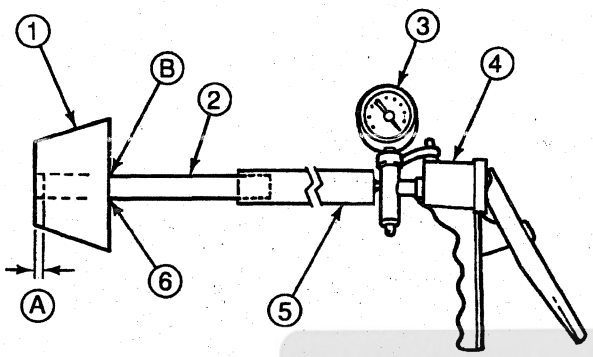

DG0139-A

Item	Part Number	Description
1	—	Rubber Stopper Cap No. 11
2	—	Tubing — Plexiglass, Steel on Copper, 1/4-5/16-Inch
3	021-00014	Gauge (Part of 014-R1054)
4	014-R1054	Vacuum Tester
5	—	Vacuum Hose
6	—	Hole, 6.35-7.93 mm (1/4-1/3 Inch)
A	—	Dimension — 3.175 mm (1/8 Inch) from Stopper End
B	—	Tight Seal Between Stopper and Tubing

Start-Up Procedure After Power Steering Pump or Gear Service

Upon initial engine start-up after a power steering pump (3A674) or steering gear (3504) overhaul, there is frequently noise and aeration. This is due to air trapped in the overhauled unit, which mixes with the surging fluid and causes aeration. The problem can be minimized using the following procedure.

Diesel Engines

1. Fill the power steering oil reservoir (3A697) and start the engine (6007).
2. **CAUTION: Do not hold steering wheel (3600) in the far left or right position; damage to power steering pump can result.**

   Cycle the steering wheel from stop to stop.
3. Shut the engine off and add fluid to bring the power steering oil reservoir to the FULL mark.

Gasoline Engines

1. Disconnect the ignition control module (ICM)(12K072) to prevent engine from starting.
2. Fill the power steering oil reservoir.
3. NOTE: Be careful to avoid prolonged cranking as the battery can be drained and the starter motor (11001) damaged.

   Crank the engine with the starter motor and continue adding fluid until the level remains constant.
4. Rotate the steering wheel approximately 30 degrees each side of center while continuing to crank the engine.
5. Recheck the fluid level, and fill as required.
6. Reconnect the ignition control module.
7. NOTE: When the battery (10655) has been disconnected and reconnected, some abnormal drive symptoms may occur while the powertrain control module (PCM)(12A650) relearns its adaptive strategy. The vehicle may need to be driven 16 km (10 miles) or more to relearn the strategy.

   To clear fault codes, disconnect battery for one minute, and then reconnect battery.
8. Start the engine, and allow it to run for several minutes.
9. **CAUTION: Do not hold steering wheel in the far left or right position; damage to power steering pump can result.**

   Rotate the steering wheel from stop to stop.
10. Shut off the engine. Recheck the fluid level, and add as required.

Fill Procedure

Noise and aeration frequently occur upon initial engine start-up. This is due to air trapped in the overhauled unit which mixes with the surging fluid and causes aeration. The problem can be minimized if the following procedure is used.

Fill Process

Whenever a steering gear (3504) or power steering pump (3A674) is replaced, follow Steps 1-5.

1. Place front wheels in straight-ahead position and engage parking brake. Do not turn steering wheel during initial fill procedure.

Official Licensed Product
Ford Motor Company

SERVICE PROCEDURES (Continued)

2. Fill power steering oil reservoir (3A697) with fluid and allow the fluid to gravity feed the system. Crack the pressure line fittings at the power steering pump and steering gear. Tighten fittings when fluid is visible. Keep adding fluid to power steering oil reservoir as required.
3. When fluid level in power steering oil reservoir no longer goes down, start engine. Continue to add fluid to power steering oil reservoir as required. Do not exceed full mark.
4. After fluid level in power steering oil reservoir no longer goes down, rotate steering wheel (3600) to full right and left turns, stop to stop. Add fluid as required.
5. Continue process until fluid level no longer changes. Fluid level is correct when it is in the full range on the dipstick.

Whenever a minor leak is corrected, follow Steps 6-8.

6. Place front wheels in straight-ahead position and engage parking brake.
7. Fill power steering oil reservoir to full mark on dipstick. Start engine and let idle for several minutes. Check fluid level and add as required.
8. Rotate steering wheel to full right and left turn, stop to stop, several times. Stop engine and check fluid level. Fill power steering oil reservoir to full range indicated on dipstick.

Priming, Power Steering Pump

Procedure No. 1

1. NOTE: The replacement power steering pump (3A674) must be primed with the specified power steering fluid prior to installation.

   NOTE: Turn the power steering pump driveshaft slowly during this procedure to allow more fluid to enter the power steering pump.

   Remove the fitting from the pressure port and pour power steering fluid into the pressure port with the port facing upward to maximize the amount of fluid added to the power steering pump.
2. Mount the power steering pump to the vehicle using care not to allow the fluid to escape from the power steering pump.
3. Connect the plumbing lines from the steering gear (3504) or Hydro-Boost and power steering oil reservoir (3A697).
4. Fill the power steering oil reservoir to the proper dipstick level.
5. **CAUTION: Do not hold steering wheel (3600) in the far left or right position; damage to power steering pump can result.**

   Start the vehicle and slowly make stop-to-stop turns to purge air from the system.
6. Stop the engine and add additional fluid to the power steering oil reservoir to the proper dipstick level.

Procedure No. 2

1. When the unprimed replacement power steering pump has been mounted to the engine, connect the plumbing lines from the steering gear or Hydro-Boost and power steering oil reservoir. Fill the power steering oil reservoir to the proper dipstick level.
2. Raise the front of the vehicle until both front wheels (1007) are off the ground.
3. **CAUTION: Do not hold steering wheel in the far left or right position; damage to power steering pump can result.**

   Start the engine and slowly make stop-to-stop turns to purge air from the system.
4. Stop the engine (6007) and add additional fluid to the power steering oil reservoir to the proper dipstick level.
5. Lower front of vehicle and check power steering system for proper operation.

CLEANING AND INSPECTION

Steering Pump, Power

When contamination is noted while overhauling the steering gear (3504), it is necessary to flush the power steering pump (3A674).

1. Leave all hoses connected, except the power steering pressure hose (3A719) at the steering gear.
2. Place the power steering pressure hose in a suitable container.
3. Fill reservoir with Motorcraft MERCON® ATF XT-2-QDX or MERCON® equivalent.
4. On gasoline engines, disconnect the ICM to prevent the engine from starting. On diesel engine, disconnect the oil pressure sensor. Crank engine for 5-10 seconds.
5. While pouring approximately 1.9 liters (2 quarts) of Motorcraft MERCON® ATF XT-2-QDX or MERCON® equivalent into the reservoir, engage the starter motor (11001).
6. As soon as all the fluid has been poured in, turn off the key.
7. Attach the power steering pressure hose at the steering gear.
8. Refill the power steering oil reservoir (3A697).
9. Crank the engine (6007) and continue adding fluid until the level remains constant. Reconnect the ICM or oil pressure sensor.

Licensed Product Ford Motor Company

CLEANING AND INSPECTION (Continued)

10. **CAUTION: Do not hold steering wheel (3600) in the far left or right position; damage to power steering pump can result.**

    Start the engine and cycle the steering wheel from stop to stop to expel any air from the system.

Cleaning

Wash all parts except seals in a chlorinated solvent and dry with compressed air.

Inspection

Thoroughly clean all power steering pump and reservoir parts (except seals) with solvent. Wipe dry with a lint-free cloth.

Steering Gear

Cleaning

CAUTION: Do not clean, wash or soak steering gear input shaft seal kit (3E502) in cleaning solvent.

1. NOTE: Disassembly and assembly of the steering gear (3504) and the subassemblies must be made on a clean workbench. The bench, tools and parts must be kept clean at all times.

   Thoroughly clean the exterior of the unit with a suitable solvent.
2. When necessary, drain as much of the hydraulic fluid (or gear grease) as possible.
3. Handle all parts very carefully to avoid nicks, burrs, scratches and dirt, which could make the parts unfit for use.

Inspection

1. Check steering gear input shaft seal for damage. Replace if necessary.
2. Inspect the valve housing for scoring or burrs.
3. Inspect the tube seats in the housing pressure port and return port for nicks, etc. If necessary, replace tube seats.
4. Check all fluid passages for obstruction or leakage.
5. Inspect the steering gear housing for cracks and stripped threads, and mating surfaces for burrs. Inspect the piston bore of the housing for scoring. Check roller bearings for damage. If necessary, replace the housing.
6. Check the steering gear input shaft seal after installation to be sure that it rotates without binding or roughness.
7. Check the piston rack teeth and sector shaft teeth for nicks and burrs.

Flushing

Flushing the steering gear is required when installing a repaired power steering pump (3A674).

1. Remove the power steering pump. Refer to Section 11-02A or Section 11-02C.
2. Install the power steering pump and connect only the power steering pressure hose (3A719) to the power steering pump. Install the pulley on the repaired pump.
3. Place the power steering return hose (3A713) from the steering gear in a suitable container and plug the tube on the power steering oil reservoir (3A697).
4. Fill the power steering oil reservoir with Motorcraft MERCON® ATF XT-2-QDX or MERCON® equivalent.
5. Disconnect the ignition control module (ICM)(12K072) on gasoline engines or the oil pressure sensor on diesel engines to prevent the engine (6007) from starting. Raise the front wheels off the ground.
6. **CAUTION: Do not hold steering wheel (3600) in the far left or right position, or damage to power steering pump may result.**

   NOTE: Be careful to avoid excessive cranking as the battery will be drained and the starter motor (11001) damaged.

   While approximately 1.9 liters (2 quarts) of power steering fluid are being poured into the power steering oil reservoir , crank the engine . At the same time, cycle the steering wheel from stop to stop.
7. As soon as all of the fluid has been poured in, turn off the ignition key and attach the ICM or the oil pressure sensor.
8. NOTE: When the battery (10655) is disconnected and reconnected, some abnormal drive symptoms may occur while the powertrain control module (PCM)(12A650) relearns its adaptive strategy. The vehicle may need to be driven 16 km (10 miles) or more to relearn the strategy.

   To clear fault codes, disconnect battery for one minute and then reconnect battery.
9. Remove the plug from the tube on the power steering oil reservoir and attach the power steering return hose to the power steering oil reservoir.
10. Check the reservoir fluid level. If low, add fluid to the proper level. Do not overfill.
11. Lower the vehicle.
12. **CAUTION: Do not hold steering wheel in the far left or right position; damage to power steering pump can result.**

    Start the engine and cycle the steering from stop to stop to expel any trapped air from the system.

Ford Motor Company Proprietary

SPECIFICATIONS

LUBRICANT/ADHESIVE/CLEANER SPECIFICATIONS

Description	Part Number	Ford Specification
Threadlock® and Sealer	EOAZ-19554-AA	WSK-M2G315-A5 (Type II)
Motorcraft MERCON® ATF	XT-2-QDX	MERCON ®

TORQUE SPECIFICATIONS, F-250 Heavy Duty, F-350 and F-SUPER DUTY CHASSIS CAB

Description	N·m	Lb-Ft
Steering Gear to Frame	73-89	54-66
Steering Gear Sector Shaft Arm to Steering Gear	230-310	170-230
Drag Link / Tie Rod End Studs	70-100	52-74
Linkage Adjusting Sleeve Clamp F-250 Heavy Duty and F-350	40-57	29-41
Linkage Adjusting Sleeve Clamp (F-Super Duty)	81-126	60-93
Power Steering Pump to Power Steering Pump Support (All)	40-55	30-40
Power Steering Pressure Hose (Pump)	34-46	25-34
Power Steering Pressure Hose and Power Steering Return Hose (Gear)	30-40	25-30
Coupling Shaft Yoke-to-Steering Gear Bolt	41-57	30-42
Flange and Insulator Assembly to Steering Gear F-250 Heavy Duty and F-350	33-50	24-37
Flange and Insulator Assembly to Steering Gear F-250 Heavy Duty and F-350	41-57	30-42
Yoke Assembly to Intermediate Shaft	41-57	30-42
Steering Column to Steering Column Shaft	31-44	23-33
Steering Column to Support Bracket	13-17	10-13
Steering Column Support Bracket to Body Side Cowl	33-55	24-41
Steering Column (Floor Opening Cover Plate to Floor)	16-20	12-15
Sector Adjuster Lock Nut	48-61	35-45
Sector Shaft Cover Bolts	75-94	55-69
Hose Connections	30-40	22-30
Control Valve Housing Mounting Face Bolts	42-62	31-46
Power Steering Pump Valve Outlet Fitting	35-54	26-40
Hose Tube Nut	41-54	30-40

TORQUE SPECIFICATIONS, F-SUPER DUTY MOTORHOME

Description	N·m	Lb-Ft
Steering Column Lower Bearing Retainer	14-18	10-14
Floor Opening Cover Plate	11-15	8-11

(Continued)

TORQUE SPECIFICATIONS, F-SUPER DUTY MOTORHOME (Cont'd)

Description	N·m	Lb-Ft
Intermediate Shaft Lock Bolt	27-47	20-35
Analyzer to Adapters	41-54	30-38
Power Steering Pressure Hoses to Brake System Booster	34-46	25-34

POWER STEERING GEAR OPERATIONAL SPECIFICATIONS — FORD

Description	Specification
Type	Recirc. Ball
Ratio	17:1
Turns of Steering Wheel (Lock to Lock — Linkage Disconnected)	4
Fluid Capacity (Included in Pump Reservoir Fill)	0.75 L (1.6 Pint Approx.)
Worm Bearing Preload	0.45-1.0 N·m (4-9 Lb-In) Not adjustable in field. Specification given for inspection purposes only.
Worm to Piston Preload	0.11-0.34 N·m (1-3 Lb-In) Not adjustable in field. Specification given for inspection purposes only.

POWER STEERING GEAR OPERATIONAL SPECIFICATIONS — ROSS TAS40

Description	Specification
Steering Ratio (Input to Output Shaft) Except F-Super Duty	17.0:1
Steering Ratio (Input to Output Shaft) F-Super Duty	21.2:1
Steering Wheel Revolutions for 90-Degree Rotation of Output Shaft	5.1
Maximum Output Shaft Rotation	95° (Maximum Travel)
Maximum Output Shaft Torque with 12.4 MPa (1800 psi) Power Assist	2657 N·m (1960 Lb-Ft)
Power Steering Fluid	Motorcraft MERCON® ATF XT-2-QDX or -DDX
Maximum Working Temperature	120°C (248°F)
Maximum Peak Temperature	150°C (302°F)
Maximum Working Pressure	12.4 MPa (1800 psi)
Maximum Pressure Drop in the Return Line	297 kPa (43 psi)
Normal Flow	16 Liters/Min. (4.2 gpm)

Official Licensed Product Ford Motor Company

SPECIFICATIONS (Continued)

SERVICE SPECIFICATIONS — FORD C-II PUMP

Pump Model	Minimum Flow @ 5.1 MPa (740 psi)		Minimum Pressure Relief		Maximum Pressure Relief	
	Liters/Minute 76°C ± 15°C	Gallons/Minute 170°F ± 5°F	kPa	psi	kPa	psi
HBC-JX	5.3	1.4	9650	1400	10550	1530
HBC-JY	5.7	1.5	10000	1450	10550	1530

SERVICE SPECIFICATIONS — ZF PUMP

Pump Model	Displacement		Minimum Flow @ 725 psi		Control Flow (+20%-10%)		Weight		Maximum Speed
	CC	CI	Liters/ Minute	Gallons/ Minute	Liters/ Minute	Gallons/ Minute	Kg	Lb	
7673	16.5	1.01	6.1	1.6	16	4.2	5.6	12.3	4500 rpm

SPECIAL SERVICE TOOLS/EQUIPMENT

SPECIAL SERVICE TOOLS REQUIRED

Tool Number/ Description	Illustration
T74P-3504-Y Spring Scale	T74P-3504-Y

SPECIAL SERVICE TOOLS DESIRED

Tool Number	Description
D81T-33610-A	Power Steering Analyzer

ROTUNDA EQUIPMENT

Model	Description
014-00230	Power Steering Analyzer
014-R1054	Vacuum Tester

Official Licensed Product Ford Motor Company

SECTION 11-02A Steering Pump, Power, C-II

SUBJECT	PAGE
VEHICLE APPLICATION	11-02A-1
DESCRIPTION AND OPERATION	
Steering Pump	11-02A-1
DIAGNOSIS AND TESTING	
Steering System, Power	11-02A-2
REMOVAL AND INSTALLATION	
Belt Drive	11-02A-5
Pulley, Power Steering Pump	11-02A-2
Quick Connect Power Steering Fitting	11-02A-6
REMOVAL AND INSTALLATION (Cont'd.)	
Steering Pump, Power	11-02A-2
CLEANING AND INSPECTION	
Steering Pump	11-02A-6
ADJUSTMENTS	
Drive Belt Tension	11-02A-6
SPECIFICATIONS	11-02A-6
SPECIAL SERVICE TOOLS/EQUIPMENT	11-02A-6

VEHICLE APPLICATION

F-250 Heavy Duty, F-350 and F-Super Duty

DESCRIPTION AND OPERATION

Steering Pump

The C-II power steering pump (3A674) is a belt-driven, slipper-type pump with a fiberglass reinforced nylon power steering oil reservoir (3A697). The power steering oil reservoir is attached to the rear side of the pump housing front plate and the power steering pump housing (3A643) is encased within the housing and reservoir. The power steering pressure hose (3A719) is attached with a quick connect fitting, located below the filler neck at the outboard side of the power steering oil reservoir. The fitting allows the line to swivel. This is normal and does not indicate an untorqued fitting.

A pressure sensitive identification tag is attached to the power steering oil reservoir. The top line of this tag indicates the basic model number and the suffix.

NOTE: Always use the tags when requesting service parts as there may be slight differences in internal components.

Ford C-II Power Steering Pump, Sectional View

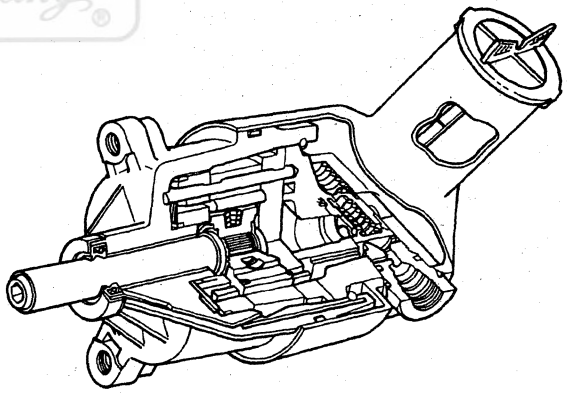

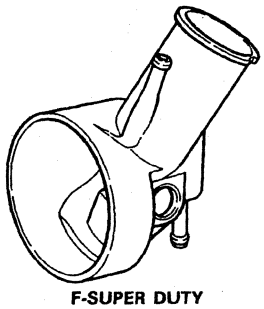

F-SUPER DUTY RESERVOIR

G6330-B

DIAGNOSIS AND TESTING

Steering System, Power

Refer to Section 11-00.

REMOVAL AND INSTALLATION

Pulley, Power Steering Pump

SPECIAL SERVICE TOOL(S) REQUIRED

Description	Tool Number
Steering Pump Pulley Remover	T69L-10300-B
Steering Pump Pulley Replacer	T65P-3A733-C

Removal

1. Remove the drive belt (8620).
2. On some vehicles, it may be necessary to remove the fan shroud (8146) to allow for proper installation and operation of the power steering pump pulley remover tool. Refer to Section 03-03 in the Powertrain, Drivetrain Manual.
3. Install Steering Pump Pulley Remover T69L-10300-B on the hub of the power steering pump pulley (3A733).
4. **CAUTION: Do not apply pressure on the power steering pump rotor shaft (3B559). Pressure will damage internal thrust areas of the power steering pump (3A674).**

   While holding the nut of the remover tool stationary with a wrench, rotate the inner spindle of the remover tool clockwise until the power steering pump pulley is pulled off the power steering pump rotor shaft.

Installation

1. Place the power steering pump pulley on the power steering pump rotor shaft.
2. Screw stud of the Steering Pump Pulley Replacer T65P-3A733-C into end of power steering pump rotor shaft.
3. While holding the inner spindle of the replacer stationary with a wrench, rotate the nut of the replacer tool clockwise until the pulley hub is flush within ±0.25 mm (±0.010 inch) of the end of the power steering pump rotor shaft.
4. Remove the replacer tool and verify that the hub is flush with the end of the power steering pump rotor shaft.
5. If hub has been installed too far onto the power steering pump rotor shaft, pull back slightly using Steering Pump Pulley Remover T69L-10300-B.
6. Install the fan shroud, if removed. Refer to Section 03-03 in the Powertrain, Drivetrain Manual.
7. Install drive belt.
8. Start engine and listen for belt "chirp." If the belt makes a chirping noise, refer to Adjustments in Section 03-05 in the Powertrain, Drivetrain Manual.

Steering Pump, Power

Removal

1. Remove power steering return hoses (3A713) at the pump, and drain fluid.
2. On F-Super Duty only, also remove power steering return line hose (3A005) at the pump, and drain fluid.
3. Remove the power steering pressure hose (3A719) by unscrewing the connector from the pump.
4. Remove drive belt (8620).
5. Remove the power steering pump pulley (3A733).
6. Remove power steering pump retaining bolts, and remove the power steering pump (3A674).

Installation

1. Position the power steering pump, and install and tighten all retaining bolts. Refer to illustrations below for bolt torque specifications.
2. Install the power steering pump pulley.
3. Install drive belt.
4. Install the pressure hose tube nut into the pump outlet fitting, and tighten to 34-54 N·m (25-40 lb-ft).
5. Connect power steering return hoses and power steering return line hose. Reposition the clamps.
6. Fill the power steering oil reservoir (3A697) with MERCON® Multi-Purpose ATF XT-2-QDX or MERCON® equivalent.
7. Start the engine and turn the steering wheel (3600) from left to right without hitting the stops to remove air from the system.
8. Check for leaks and recheck the fluid level. Add fluid if necessary to proper level as specified in Section 11-00 in this manual.

5.8L C-II PUMP

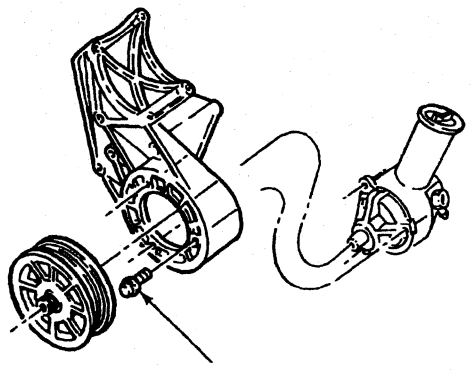

DG0067-A

Official Licensed Product Ford Motor Company

REMOVAL AND INSTALLATION (Continued)

7.5L C-II PUMP

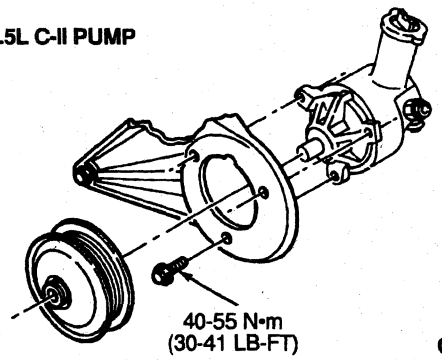

G8332-B

7.3L Diesel C-II Pump

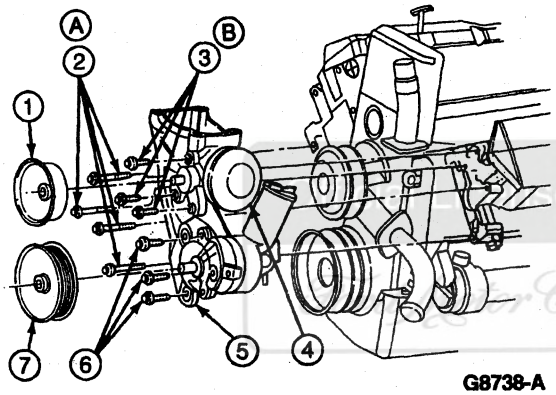

G8738-A

Item	Part Number	Description
1	2L487	Brake Vacuum Pump Pulley
2	N605790-S2	Bolt
3	N606068-S60	Bolt
4	2A451	Vacuum Pump
5	19E708	Accessory Mounting Bracket
6	N800199-S8	Bolt
7	3A733	Power Steering Pump Pulley
A	—	Tighten to 22-32 N•m (16-24 Lb-Ft)
B	—	Tighten to 40-55 N•m (30-41 Lb-Ft)

(Continued)

REMOVAL AND INSTALLATION (Continued)

Power Steering Pump Installation, F-Super Duty Chassis Cab

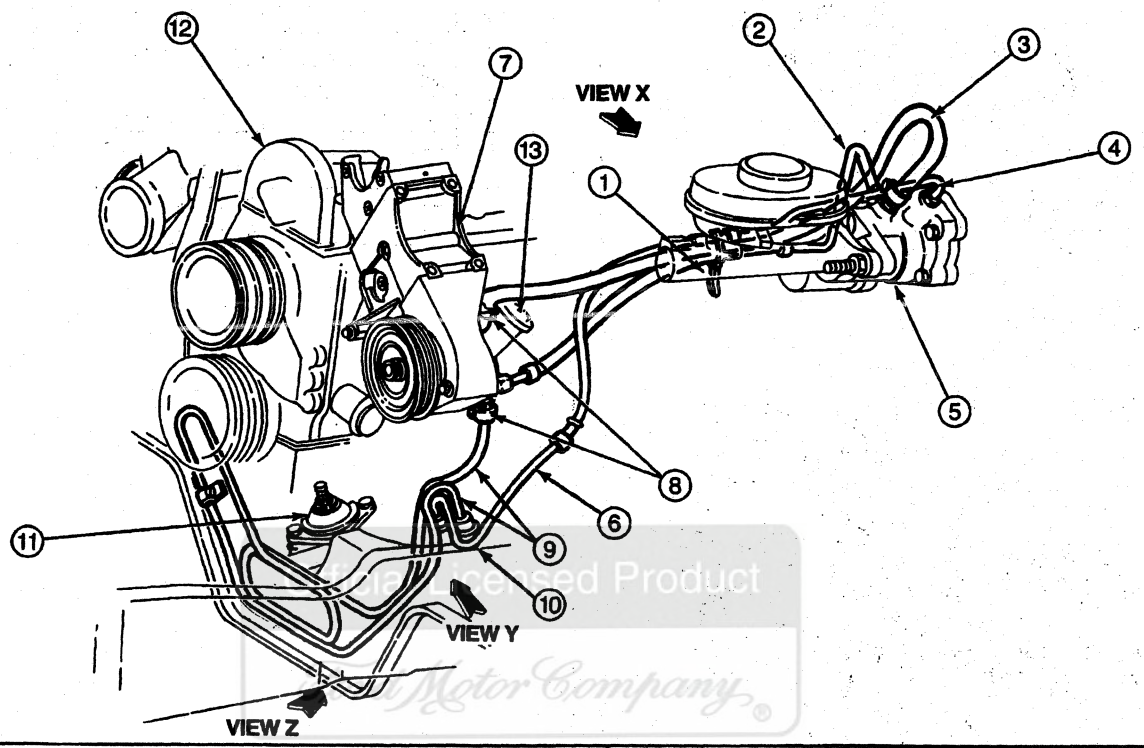

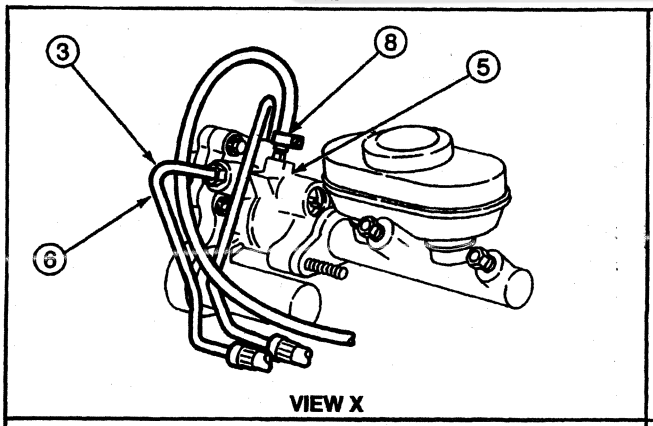

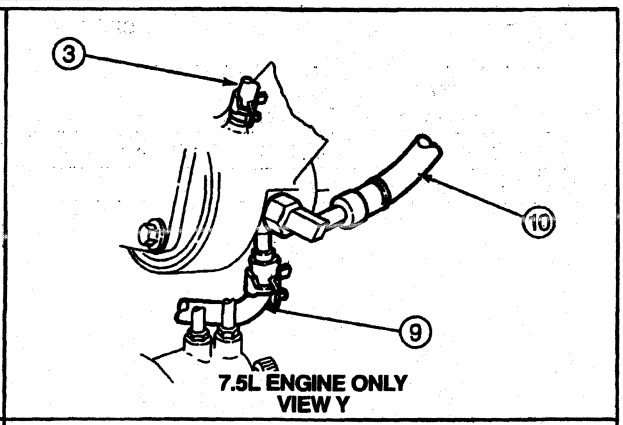

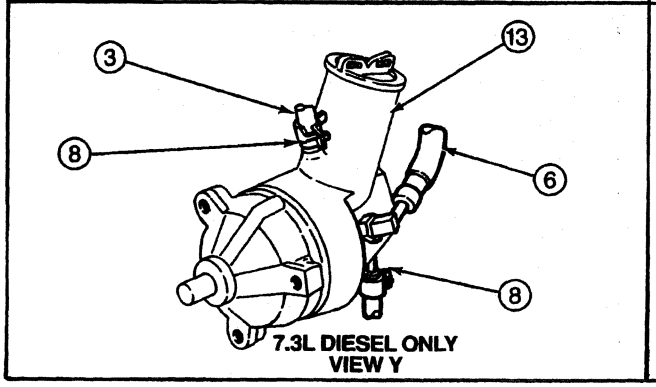

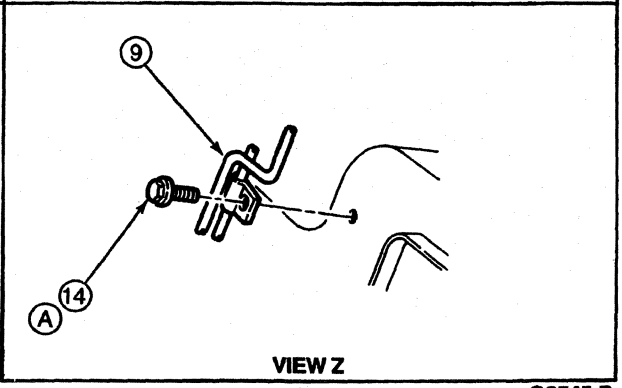

G6545-D

REMOVAL AND INSTALLATION (Continued)

Item	Part Number	Description
1	95873	Strap
2	3A717	Power Steering Right Turn Pressure Hose
3	3A005	Power Steering Return Line Hose
4	3A714	Power Steering Left Turn Pressure Hose
5	2B559	Hydro-Boost Assy
6	3A717	Power Steering Right Turn Pressure Hose
7	19E708	FEAD Bracket

(Continued)

Item	Part Number	Description
8	3C750	Clamp
9	3A713	Power Steering Return Hose
10	3A714	Power Steering Left Turn Pressure Hose
11	3504	Steering Gear
12	6007	Engine
13	3A674	Power Steering Pump
14	40949	Screw
A	—	Tighten to 15-22 N·m (11-16 Lb-Ft)

Belt Drive

Removal

1. Install a 16-mm (5/8-inch) closed end wrench for 7.5L engines or a 15-mm (19/32-inch) closed end wrench for 5.8L and 7.3L engines on the tensioner pulley bolt and lift the tensioner arm away from the belt.
2. Remove belt. Release tensioner arm slowly. Do not allow arm to snap back after the belt is removed because this may damage the tensioner.

Installation

1. Install closed end wrench on the tensioner pulley bolt and rotate the tensioner arm counterclockwise.
2. NOTE: Make sure all pulleys are seated correctly. One revolution of the engine (6007) with an incorrectly seated belt can snap tensile members in the belt.

   Install drive belt (8620) over pulleys, making sure all belt ribs are correctly seated in the pulley grooves. Release tensioner.

Six-Rib Belt, 5.8L and 7.5L

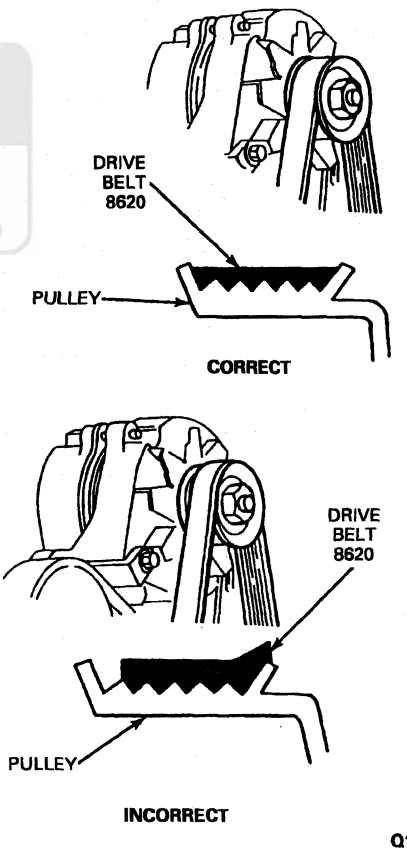

Ford Motor Company Licensed Product

REMOVAL AND INSTALLATION (Continued)

Eight-Rib Belt, 7.3L

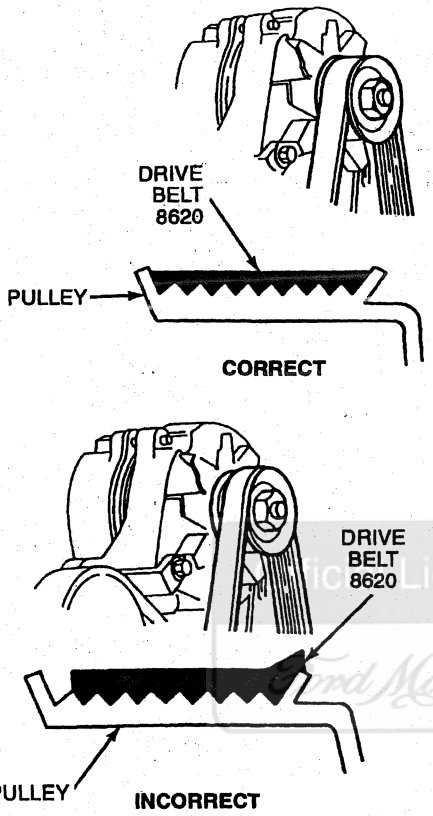

Quick Connect Power Steering Fitting

The quick disconnect power steering fitting may disengage if not fully assembled, if the snap ring is missing or if the tube nut or the hose end is not machined properly.

If the fitting disengages, replace the hose and tube nut assembly. The fitting is fully engaged only when the hose will not pull out. To test for positive engagement, the system should be properly filled, the engine started and the steering wheel (3600) cycled from stop to stop. Service hose assemblies have tube nuts, snap rings and O-rings already attached. Refer to the Service Procedures portion of Section 11-00 for leakage checks.

CLEANING AND INSPECTION

Steering Pump

Refer to Section 11-00.

ADJUSTMENTS

Drive Belt Tension

The drive belt tension is maintained by an automatic belt tensioner and cannot be adjusted.

SPECIFICATIONS

LUBRICANT/ADHESIVE/CLEANER SPECIFICATIONS

Description	Part Number	Ford Specification
MERCON® Multi-Purpose ATF	XT-2-QDX	MERCON®

TORQUE SPECIFICATIONS

Description	N·m	Lb-Ft
Bolt, Pump to Support Bracket	40-55	30-41
Tube Nut, Pump Outlet Fitting to Pump	34-54	25-40
Screw, Return Hose to Frame Crossmember	15-22	11-16
Bolt, FEAD to Engine (7.3L Only)	22-32	16-24

SPECIAL SERVICE TOOLS/EQUIPMENT

SPECIAL SERVICE TOOLS REQUIRED

Tool Number/ Description	Illustration
T65P-3A733-C Steering Pump Pulley Replacer	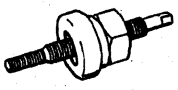 T65P-3A733-C
T69L-10300-B Steering Pump Pulley Remover	T69L-10300-B

SECTION 11-02B Steering Gear, Power, Ford

SUBJECT	PAGE
VEHICLE APPLICATION	11-02B-1
DESCRIPTION AND OPERATION	
Steering Gear	11-02B-1
Identification	11-02B-2
DIAGNOSIS AND TESTING	
Steering System, Power	11-02B-2
REMOVAL AND INSTALLATION	
Steering Gear	11-02B-2
DISASSEMBLY AND ASSEMBLY	
Input Shaft and Valve Assembly	11-02B-7
Piston	11-02B-5
Steering Gear	11-02B-3
DISASSEMBLY AND ASSEMBLY (Cont'd.)	
Steering Gear Housing	11-02B-6
Valve Housing	11-02B-7
CLEANING AND INSPECTION	
Steering Gear	11-02B-9
System Flushing	11-02B-9
ADJUSTMENTS	
In-Vehicle Adjustment	11-02B-9
Meshload	11-02B-9
Rotary Valve Centering Check	11-02B-10
SPECIFICATIONS	11-02B-10
SPECIAL SERVICE TOOLS/EQUIPMENT	11-02B-11

VEHICLE APPLICATION

F-250 Heavy Duty, F-350 and F-Super Duty

DESCRIPTION AND OPERATION

Official Licensed Product Company

Steering Gear

The steering gear (3504) is a torsion bar type of hydraulic-assisted system. The system includes a power steering gear input shaft and control (3D517) which is meshed to the gear teeth on the steering gear sector shaft (3575). The steering gear also includes a rotary-style hydraulic valve consisting of an input shaft, control valve sleeve and torsion bar. The valve sleeve is pinned to the worm. The input shaft is connected to the worm through the torsion bar. The other end of the input shaft is attached to the steering column and steering wheel (3600).

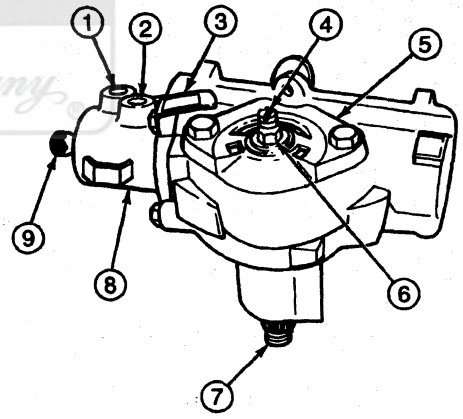

G4728-C

Item	Part Number	Description
1	—	Outlet Port (Part of 3504)
2	—	Inlet Port (Part of 3504)
3	—	Identification Tag (Part of 3504)
4	—	Sector Shaft Adjusting Screw (Part of 3504)
5	3580	Steering Gear Sector Shaft Housing Cover
6	—	Lock Nut (Part of 3504)
7	3575	Steering Gear Sector Shaft
8	—	Control Valve Housing (Part of 3568)

(Continued)

DESCRIPTION AND OPERATION (Continued)

Item	Part Number	Description
9	3D517	Power Steering Gear Input Shaft and Control

Identification

The information below is included on the identification tag attached to the steering gear housing.

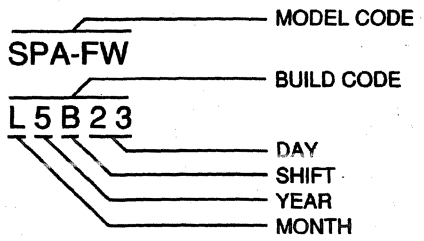

DIAGNOSIS AND TESTING

Steering System, Power

Refer to Section 11-00.

REMOVAL AND INSTALLATION

Steering Gear

SPECIAL SERVICE TOOL(S) REQUIRED

Description	Tool Number
Pitman Arm Puller	T64P-3590-F

Removal

1. Remove the splash shield (if so equipped) from the flex coupling.
2. Using a 5/8-inch flare-nut wrench, disconnect the power steering pressure and return line tube nuts from the steering gear (3504). Plug the lines and the ports in the steering gear.
3. Disconnect the lower steering column shaft (3B676) at the steering gear by removing the bolt.
4. Raise the vehicle and remove the sector shaft arm nut and washer.
5. Remove the steering gear sector shaft arm (3590) from the steering gear sector shaft (3575) using Pitman Arm Puller T64P-3590-F.
6. Support the steering gear, and remove the steering gear attaching bolts.
7. Work the steering gear free of the lower steering column shaft. Remove the steering gear.

Installation

1. Install the splash shield (if so equipped) onto the steering gear lugs.
2. Slide the flexible coupling into place on the lower steering column shaft assembly. Turn the steering wheel (3600) so the spokes are in the horizontal position.
3. Center the steering gear power steering gear input shaft with the indexing flat facing down.
4. Slide the power steering gear input shaft into the flexible coupling and into place on the frame side rail.
5. Install the flex coupling retaining bolt and tighten to 41-57 N·m (30-42 lb-ft).
6. Install the steering gear-to-frame retaining bolts, and tighten to 73-90 N·m (54-66 lb-ft).
7. Make sure the wheels are in the straight-ahead position, then install the steering gear sector shaft arm on the steering gear sector shaft.
8. Install the sector shaft arm washer and nut. Tighten nut to 230-310 N·m (170-228 lb-ft).
9. Connect the pressure and return line tube nuts to the steering gear, and tighten to 27-41 N·m (20-30 lb-ft).
10. Snap the flex-coupling upper shield over the flex coupling lower shield.
11. Fill the power steering pump. Refer to Section 11-00.

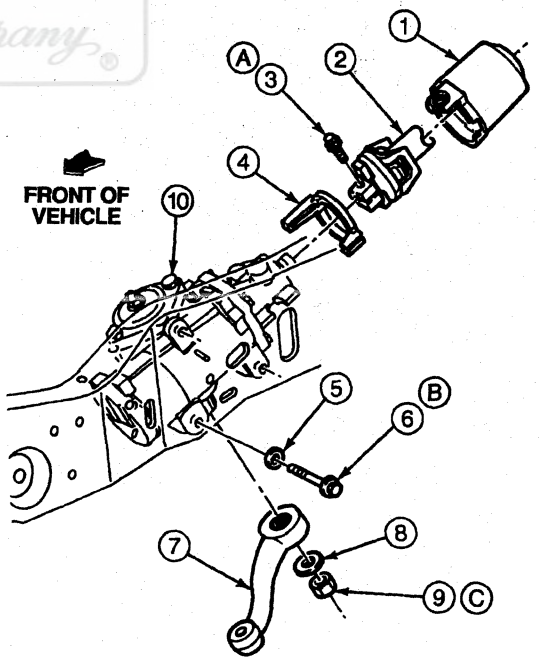

Item	Part Number	Description
1	3F540	Upper Shield
2	3B676	Lower Steering Column Shaft

(Continued)

Official Licensed Reprint Ford Motor Company

REMOVAL AND INSTALLATION (Continued)

Item	Part Number	Description
3	N803942-S100	Bolt
4	3F540	Lower Shield
5	388273	Washer
6	389442-S190	Bolt
7	3590	Steering Gear Sector Shaft Arm
8	34798	Washer
9	380771	Nut
10	3504	Steering Gear
A	—	Tighten to 41-57 N·m (30-42 Lb-Ft)
B	—	Tighten to 73-90 N·m (54-66 Lb-Ft)
C	—	Tighten to 230-310 N·m (170-228 Lb-Ft)

DISASSEMBLY AND ASSEMBLY

Steering Gear

NOTE: Do not use solvent on seals. Using a clean workbench and tools, thoroughly clean the exterior of the gear with solvent. Drain off excess hydraulic fluid, if necessary.

NOTE: Handle all parts carefully to avoid nicks, burrs, scratches and dirt.

SPECIAL SERVICE TOOL(S) REQUIRED

Description	Tool Number
Bench Mounted Holding Fixture	T57L-500-B
Adjuster and Lock Nut Wrench	T66P-3553-B
Valve Housing to Piston Spacer	T66P-3553-C

Disassembly

1. Hold the steering gear (3504) upside down over a drain pan and cycle the power steering gear input shaft and control (3D517) several times to drain the fluid from the steering gear.
2. NOTE: The indexing flat on the power steering gear input shaft and control should be facing downward.

   Secure the steering gear in a soft-jawed vise.

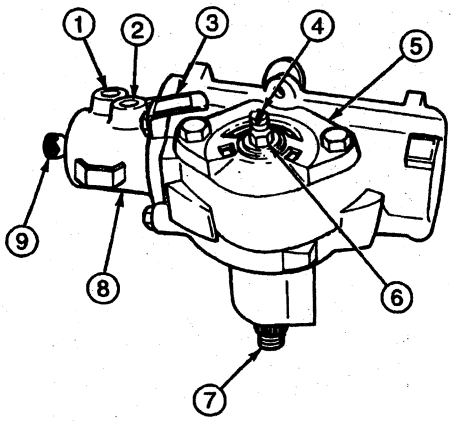

G4728-C

Item	Part Number	Description
1	—	Outlet Port (Part of 3504)
2	—	Inlet Port (Part of 3504)
3	—	Identification Tag (Part of 3504)
4	—	Sector Shaft Adjusting Screw (Part of 3540)
5	3568	Steering Gear Housing End Cover
6	—	Lock Nut (Part of 3540)
7	3575	Steering Gear Sector Shaft
8	—	Control Valve Housing (Part of 3568)
9	3D517	Power Steering Gear Input Shaft and Control

3. Turn the power steering gear input shaft and control to either stop, then turn it back two turns to center the steering gear.
4. Remove bolts to the steering gear sector shaft housing cover (3580).
5. Tap the lower end of the steering gear sector shaft (3575) with a soft hammer to loosen it, and lift the steering gear housing end cover (3568) and steering gear sector shaft from the housing as an assembly. Discard the power steering gear control valve housing o-ring (3756).
6. NOTE: This step is required only when it is necessary to remove the steering gear sector shaft from the sector assembly.

   Remove the nut from the sector shaft adjusting screw. Turn the steering gear sector shaft housing cover counterclockwise and remove it from the sector shaft adjuster screw.
7. Remove the valve housing attaching bolts and identification tag. Lift the valve housing off the steering gear housing (3548). Remove the valve housing, piston assembly and steering gear sector shaft housing cover gasket (3581). Discard the gasket.

Official Licensed Product Ford Motor Company

DISASSEMBLY AND ASSEMBLY (Continued)

8. NOTE: If valve housing or the power steering gear input shaft seals (3D526) are to be replaced, proceed to Step 11. If steering gear sector shaft housing oil seal (3591) is to be replaced, refer to Steering Gear Housing in the Disassembly and Assembly portion of this section. Steering gear worm ball (3647) must be removed if power steering gear input shaft seal is to be replaced.

   With the piston held so the steering gear ball return guide (3523) faces up, remove the ball guide clamp screws and steering gear ball return guide clamp (3544).

9. With a finger over the opening in the steering gear ball return guide, turn the piston so the steering gear ball return guide faces down over a clean container. Let the steering gear ball return guide drop into the container.

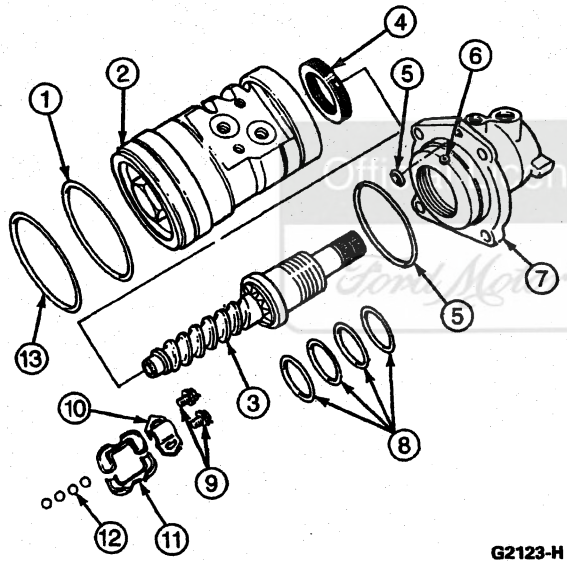

G2123-H

Item	Part Number	Description
1	—	Piston Ring (Part of 3E502)
2	—	Piston (Part of 3D517)
3	3D517	Power Steering Gear Input Shaft and Control
4	3D627	Power Steering Gear Race Nut
5	—	O-Ring (Part of 3D517)
6	382095-S	Race Lock Nut Setscrew
7	—	Valve Housing (Part of 3504)
8	—	Valve Sleeve Seals (Part of 3D517)
9	388889-S	Screws
10	3544	Steering Gear Ball Return Guide Clamp

(Continued)

Item	Part Number	Description
11	3523	Steering Gear Ball Return Guide
12	3647	Steering Gear Worm Ball
13	3805	Power Steering Gear Piston Seal

10. Rotate the power steering gear input shaft and control from stop to stop until all balls fall from the piston into the container. The power steering gear input shaft and control can then be removed from the piston. Inspect the piston bore to make sure all steering gear worm balls have been removed.
11. Install the power steering gear input shaft and control in the Bench Mounted Holding Fixture T57L-500-B, and loosen the Allen head race lock nut screw from the valve housing.
12. Remove the power steering gear race nut (3D627) using Adjuster and Lock Nut Wrench T66P-3553-B and Valve Housing to Piston Spacer T66P-3553-C.
13. Carefully slide the power steering gear input shaft and control and steering gear input worm gear and rack (3524) out of the valve housing.

REMOVING POWER STEERING GEAR RACE NUT

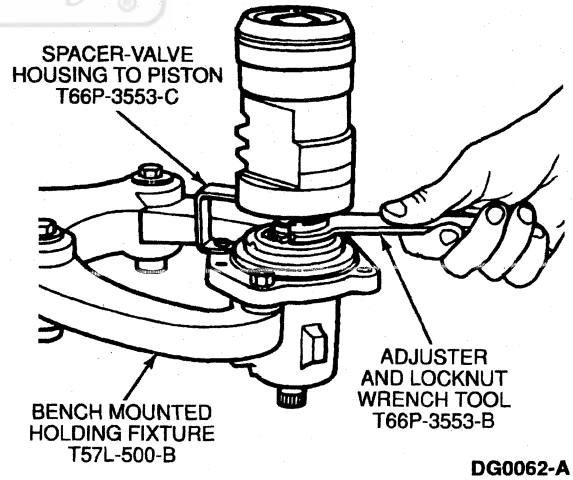

DG0062-A

Assembly

1. Mount the valve housing in the Bench Mounted Holding Fixture T57L-500-B with the flanged end up.
2. Apply a light coat of MERCON® Power Steering Fluid XT-2-QDX or MERCON® equivalent to the Teflon® rings on the valve sleeve.
3. Carefully install the power steering gear input shaft and control valve in the steering gear housing.
4. Install the power steering gear race nut in the housing, and tighten to 75-122 N·m (55-90 lb-ft).

DISASSEMBLY AND ASSEMBLY (Continued)

5. Install the Allen head race lock nut setscrew through the valve housing, and tighten to 1.7-2.8 N·m (15-25 lb-in).
6. Place the piston on the bench with the ball guide holes facing up. Insert the power steering gear input shaft and control into the piston so the first groove is in line with the hole nearest the center of the piston.
7. Place the steering gear ball return guide in the piston. Turning the power steering gear input shaft and control counterclockwise, place the same steering gear worm balls as were removed in the steering gear ball return guide. During assembly, 27 to 29 balls are required. If all the balls have not been inserted upon reaching the left stop, rotate the power steering gear input shaft and control in one direction then the other while inserting the remaining balls.

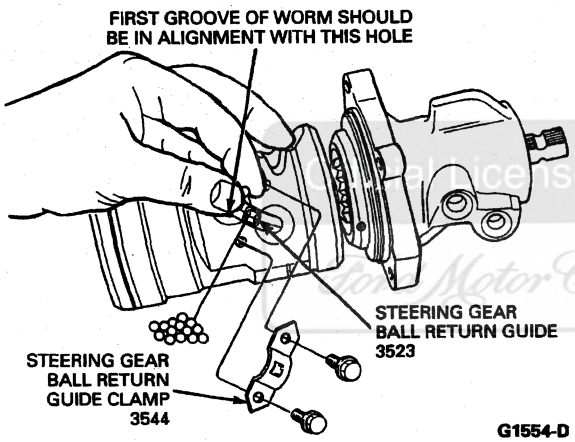

8. Secure the guides in the ball nut with the clamp. Tighten screws to 5-7 N·m (45-61 lb-in).
9. Apply petroleum jelly or equivalent to the Teflon® seal on the piston.
10. Place a new steering gear sector shaft housing cover gasket on the valve housing.
11. Slide the piston and valve into the steering gear housing, being careful not to damage the piston ring.
12. Align the oil passage in the steering gear ball return guide with the passage in the steering gear housing. Place a new O-ring onto the oil passage hole of the steering gear housing. Install identification tag onto the housing. Install, but do not tighten, the attaching bolts. Identification tag is to be installed under upper right valve housing bolt.
13. Rotate the piston so the teeth are in the same plane as the steering gear sector shaft. Tighten the valve housing attaching bolts to 40-60 N·m (30-44 lb-ft).
14. Position the steering gear sector shaft housing oil seal in the steering gear housing. Turn the input shaft to center the piston.
15. Apply petroleum jelly or equivalent to the sector shaft journal, and position the sector shaft and cover assembly in the gear housing. Install the steering gear housing end cover attaching bolts. Tighten the bolts to 75-94 N·m (55-69 lb-ft).
16. Attach a torque wrench to the power steering gear input shaft. Adjust meshload to specification. Refer to Specifications at the end of this section.

Piston

Disassembly

1. Remove the Teflon® piston seal and O-ring from the piston and ball nut. Discard both seal and O-ring.

Assembly

1. Dip a new O-ring in MERCON® Power Steering Fluid XT-2-QDX or MERCON® or equivalent meeting and install it on the piston and ball nut.
2. Install a new Teflon® piston seal on the piston and ball nut being careful not to stretch it any more than necessary.

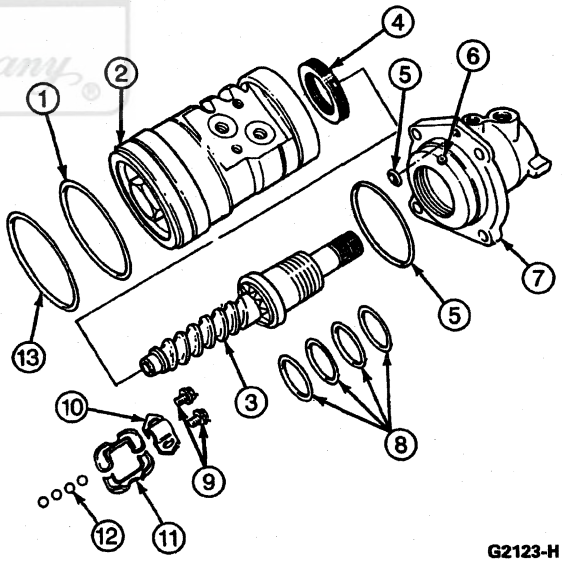

Item	Part Number	Description
1	—	Piston Ring (Part of 3E502)
2	—	Piston (Part of 3D517)
3	3D517	Power Steering Gear Input Shaft and Control
4	3D627	Power Steering Gear Race Nut
5	—	O-Ring (Part of 3D517)
6	382095-S	Race Lock Nut Setscrew

(Continued)

DISASSEMBLY AND ASSEMBLY (Continued)

Item	Part Number	Description
7	—	Valve Housing (Part of 3504)
8	—	Valve Sleeve Seals (Part of 3D517)
9	388889-S	Screws
10	3544	Steering Gear Ball Return Guide Clamp
11	3523	Steering Gear Ball Return Guide
12	3647	Steering Gear Worm Ball
13	3805	Power Steering Gear Piston Seal

Steering Gear Housing

SPECIAL SERVICE TOOL(S) REQUIRED

Description	Tool Number
Bench Mounted Holding Fixture	T57L-500-B
Puller	T58L-101-B
Impact Slide Hammer	T59L-100-B
Sector Shaft Seal Replacer	T77L-3576-A

Disassembly

1. Place steering gear housing (3548) in Bench Mounted Holding Fixture T57L-500-B.
2. Remove the snap ring from the lower end of the steering gear housing using Retaining Ring Pliers D79L-7000-A or equivalent.
3. Remove dust seal using Puller T58L-101-B and Impact Slide Hammer T59L-100-B. Discard the seal.

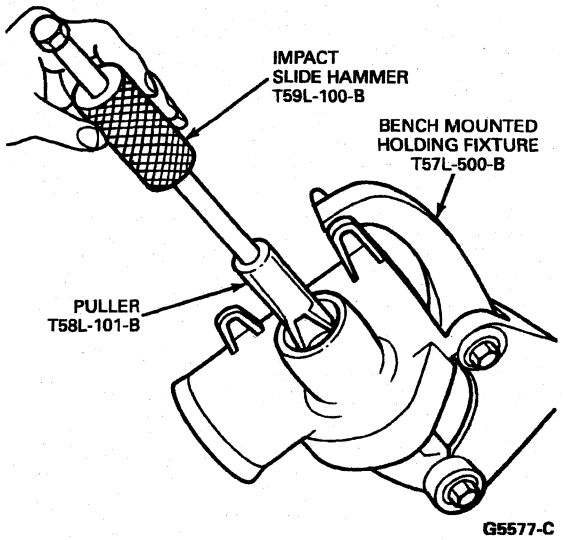

G5577-C

4. Remove pressure seal in the same manner. Discard the seal.

Assembly

1. NOTE: Proper seal installation tools and procedures must be used to prevent damage to seals during assembly.

   Lubricate the new pressure seal and new dust seal with clean Multi-Purpose Grease DOAZ-19584-AA or equivalent meeting Ford specification ESB-M1C93-A.
2. Apply Multi-Purpose Grease DOAZ-19584-AA or equivalent meeting Ford specification ESB-M1C93-A to the sector shaft seal bore.
3. Place the dust seal on Sector Shaft Seal Replacer T77L-3576-A so the raised lip of the steering gear sector shaft housing oil seal (3591) is toward the tool.
4. Place the pressure seal on the tool with lip away from the tool. The flat side of the pressure seal should be against the flat side of the dust seal.

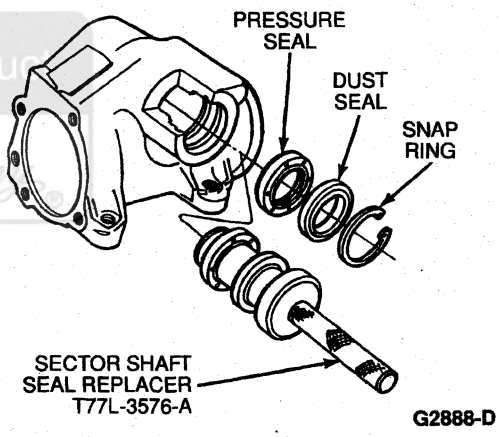

G2888-D

5. **CAUTION: Do not bottom seals against bearing. The seal will not function properly when bottomed against the bearing.**

   Insert the seal driver tool into the sector shaft bore and drive the tool until the seals clear the snap ring groove.
6. Install snap ring in the groove in the housing.
7. Apply a generous amount of Ford Multi-Purpose Grease DOAZ-19584-AA or equivalent grease meeting Ford specification ESB-M1C93-A to the areas between the seal lips.

Ford Motor Company

DISASSEMBLY AND ASSEMBLY (Continued)

Input Shaft and Valve Assembly

SPECIAL SERVICE TOOL(S) REQUIRED

Description	Tool Number
Adjuster and Lock Nut Wrench	T66P-3553-B
Bench Mounted Holding Fixture	T57L-500-B
Puller	T58L-101-B
Impact Slide Hammer	T59L-100-B
Impact Shaft Bearing / Seal Tool	T65P-3524-A

Disassembly

1. Remove the steering gear (3504) from the vehicle.
2. Drain all the remaining fluid from the steering gear into a suitable container.
3. Mount the steering gear vertically in a soft-jawed vice with the power steering gear input shaft and control (3D517) pointing up.
4. Remove the four bolts retaining the valve housing to the steering gear.
5. Turn the loosened valve housing clockwise until there is approximately 34 mm (1.5 inch) between the valve housing and the steering gear housing (3548).
6. Insert two temporary bolts, approximately 62-mm (2.5 inches) in length, through the valve housing to the steering gear keeping the 34-mm (1.5-inch) clearance between the valve housing and the steering gear.
7. Remove the lock nut retaining setscrew from the valve housing.
8. Using Adjuster and Lock Nut Wrench T66P-3553-B, remove the steering gear worm thrust bearing locknut (3707).
9. Remove the previously installed bolts and then remove the valve housing.
10. Mount the valve housing into Bench Mounted Holding Fixture T57L-500-B.
11. Using Puller T58L-101-B and Impact Slide Hammer T59L-100-B, remove the dust seal from the valve housing.
12. Remove the snap ring from the valve housing.
13. Turn the bench mounted holding fixture to invert the valve housing.
14. Insert Bearing Replacer T65P-3524-A2 and Drive Handle T65P-3524-A3 into the valve body assembly opposite the oil seal end, and gently tap the bearing and the pressure seal out of the housing.

Assembly

1. Inspect steering gear worm ball (3647) and power steering gear input shaft and control for any damage. Replace components as required.
2. Coat the steering gear worm ball kit and seal surface of the housing with petroleum jelly or equivalent.
3. Install the steering gear worm ball kit with the metal side covering, facing the rollers outward. Seat the steering gear worm ball kit in the valve housing using Seal Replacer T65P-3524-A1. Be sure steering gear worm ball kit rotates freely.
4. Dip a new oil seal in Standard Transmission Lubricant (SAE 80W) D8DZ-19C547-A or equivalent meeting Ford specification ESP-M2C83-C and place it into the housing with the metal side facing outward. Drive the seal into the housing until the outer edge does not quite clear the snap ring groove.
5. Insert the snap ring in the housing until it is fully seated in the groove.
6. Place the new dust seal in the housing with the dished side facing out. Using seal replacer and driver handle, drive dust seal into place.
7. NOTE: When the valve housing is reinstalled, the seal will be located just past the undercut in the power steering gear input shaft and control.

   Pack the area between the two seals with Multi-Purpose Grease DOAZ-19584-AA or equivalent meeting Ford specification ESB-M1C93-A.
8. Inspect valve housing O-ring for damage. Replace if required.
9. Install the valve housing on the power steering gear input shaft and control. Install the two 62-mm (2.5-inch) temporary bolts keeping 34 mm (1.5 inch) between the valve housing and the steering gear housing as done during Step 6 of the disassembly process.
10. Install the power steering gear race nut (3D627) and tighten to 75-122 N·m (55-90 lb-ft). Install the lock nut setscrew.
11. Remove the 62-mm (2.5-inch) temporary bolts and position the valve housing onto the steering gear housing. Install the valve housing retaining bolts and tighten to 40-60 N·m (30-44 lb-ft).
12. Remove the steering gear from the soft-jawed vise and install it into the vehicle.

Valve Housing

NOTE: The only service that can be performed on the control valve assembly is the replacement of the four Teflon® seals on the valve sleeve and replacement of the control valve housing.

SPECIAL SERVICE TOOL(S) REQUIRED

Description	Tool Number
Puller	T58L-101-B
Impact Slide Hammer	T59L-100-B
Bench Mounted Holding Fixture	T57L-500-B
Input Shaft Bearing / Seal Tool	T65P-3524-A
Brass Tube Seat Remover	T74P-3504-L
Brass Tube Seat Replacer	T74P-3504-M

DISASSEMBLY AND ASSEMBLY (Continued)

Disassembly

1. With worm shaft removed, remove the dust seal from the valve housing using Puller T58L-101-B and Impact Slide Hammer T59L-100-B. Discard the seal.
2. Remove the snap ring from the valve housing.

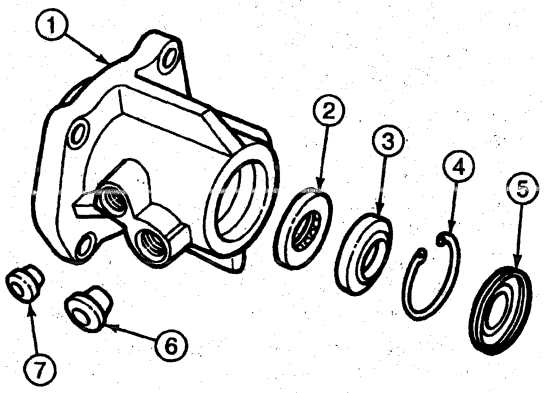

G5578-B

Item	Part Number	Description
1	—	Power Steering Control Valve Housing (Part of 3504)
2	—	Bearing (Part of 3504)
3	—	Oil Seal (Part of 3504)
4	—	Snap Ring (Part of 3504)
5	3D527	Dust Seal
6	—	Outlet Tube Seat (Part of 3504)
7	—	Inlet Tube Seat (Part of 3504)

3. Turn Bench Mounted Holding Fixture T57L-500-B to invert valve housing.
4. **CAUTION: Do not damage the housing when inserting and removing the tools.**

   Insert Seal Replacer T65P-3524-A2 and Driver Handle T65P-3524-A3 in the valve housing opposite the oil seal end, and gently tap the power steering gear input shaft bearing (3D525) and seal out of the housing. Discard the seal.
5. If they are damaged, remove the fluid inlet and outlet tube seats with Brass Tube Seat Remover T74P-3504-L.

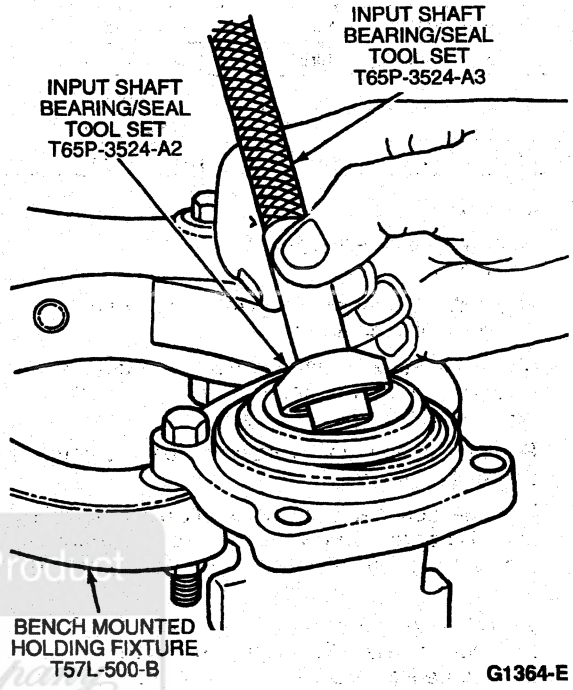

G1364-E

Assembly

1. Coat the fluid inlet and outlet tube seats with petroleum jelly or equivalent. Install seats in the housing with a Brass Tube Seat Replacer T74P-3504-M.
2. Coat the bearing and seal surface of the steering gear housing (3548) with petroleum jelly or equivalent.

Official Licensed Product

DISASSEMBLY AND ASSEMBLY (Continued)

3. Install the input shaft bearing with the metal side covering the rollers facing outward. Seat the bearing in the valve housing using Seal Replacer T65P-3524-A1. Be sure the bearing rotates freely.

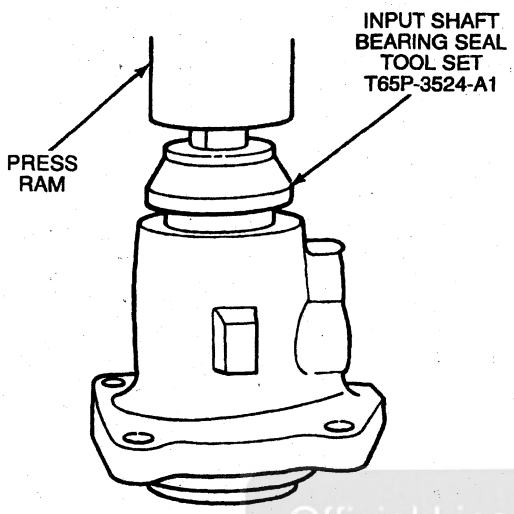

G5579-B

4. Dip a new oil seal in gear lubricant, MERCON® Power Steering Fluid XT-2-QDX or MERCON® equivalent and place it in the housing with the metal side facing outward. Drive the seal into the steering gear housing until the outer edge does not quite clear the snap ring groove.

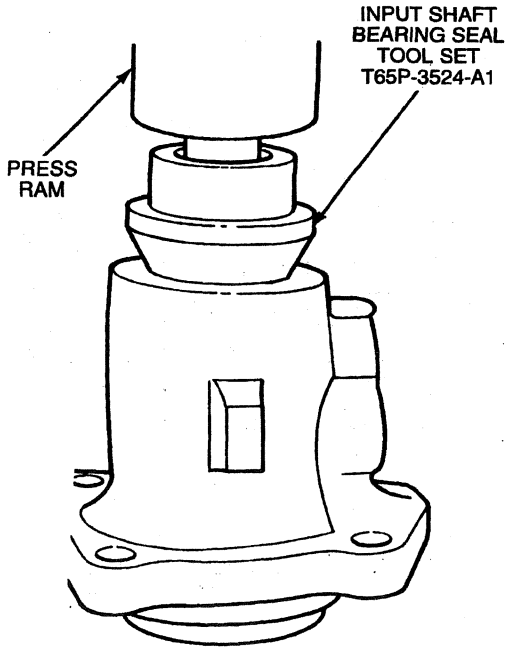

G5580-B

5. Place the snap ring in the housing and drive on the ring using Seal Replacer T65P-3524-A1 until the snap ring seats in its groove.
6. Place the dust seal in the housing with the dished side (rubber side) facing out. Drive the dust seal into place using Seal Replacer T65P-3524-A1. When properly installed, the seal will be located behind the undercut in the power steering gear input shaft and control (3D517).
7. Apply a generous amount of Ford Multi-Purpose Grease DOAZ-19584-AA or equivalent meeting Ford specification ESB-M1C93-A to the area between the two seals.

CLEANING AND INSPECTION

Steering Gear

Refer to Section 11-00.

System Flushing

Refer to Section 11-00.

ADJUSTMENTS

Meshload

During the vehicle breaking-in period, some factory adjustments may change. These changes in adjustment will not necessarily affect operation of the steering gear assembly. If excessive steering lash is encountered, then meshload should be checked and adjustment may be required.

In-Vehicle Adjustment

SPECIAL SERVICE TOOL(S) REQUIRED

Description	Tool Number
Pitman Arm Puller	T64P-3590-F

Adjust total on center load to eliminate excessive lash between the sector and rack teeth as follows.

1. With the engine (6007) off, turn the steering wheel (3600) from full right stop to full left stop at least once.
2. Remove steering wheel pad horn switch (13A805).
3. Disconnect the steering gear sector shaft arm (3590) from the steering gear sector shaft (3575) using Pitman Arm Puller T64P-3590-F.

Official Licensed Product

ADJUSTMENTS (Continued)

4. Attach a newton meter (pound-inch) torque wrench to the steering wheel hub nut and determine the torque required to rotate the power steering gear input shaft and control (3D517) back and forth across the center position (± 90 degrees).
5. Reset the meshload only if the measured torque for total on-center load is less than 1.5 N·m (13 lb-in). If reset is required, loosen the adjuster lock nut and turn the sector shaft adjuster screw until the measured total on-center load torque is 2.0 N·m (18 lb-in). Hold the sector shaft screw in place and tighten the lock nut to 48-61 N·m (35-45 lb-ft).
6. Recheck torque readings and replace the steering gear sector shaft arm. Tighten the pitman arm-to-sector shaft nut 230-310 N·m (170-228 lb-ft).
7. Verify no binding condition in steering throughout full stop-to-stop travel. Verify customer concern is resolved.
8. Replace steering wheel pad horn switch.

Rotary Valve Centering Check

1. NOTE: A hissing noise is a normal characteristic of rotary valve steering gears and in no way affects steering. Do not replace the shaft and control assembly unless the hiss is objectionable. A replacement valve will also exhibit slight noise, and is not always a cure for the complaint. Any metal-to-metal contacts, such as sheet metal to steering components will transmit valve hiss noise into the passenger compartment.

   The only service that can be performed on the new valve worm and assembly is the replacement of the four valve sleeve O-rings on the valve sleeve and replacement of the control valve housing. Install a 0-13,789 kPa (0-2000 psi) pressure-gauge Power Steering Analyzer D81T-33610-A or equivalent in the power steering pressure hose (3A719) between the power steering pump outlet port and the integral steering gear inlet port. Be sure that the valve on the gauge is fully open.
2. Check the fluid level in the power steering oil reservoir (3A697) and add MERCON® Power Steering Fluid XT-2-QDX or MERCON® equivalent if necessary.
3. Start the engine (6007) and turn the steering wheel (3600) from side to side to bring the steering fluid to normal operating temperature. Turn off the engine and recheck the fluid level. Add fluid if necessary.
4. With the engine running at approximately 1000 rpm and the steering wheel centered, attach a pound-inch torque wrench to the steering wheel nut. Apply sufficient torque in each direction to get a gauge reading of 1723 kPa (250 psi).
5. The torque wrench readings should be the same in both directions at 1723 kPa (250 psi). If the difference between the readings exceeds 0.68 N·m (6 lb-in), remove the steering gear (3504) and replace the shaft and control assembly.
6. When performing the valve centering check outside the vehicle, use the procedures described above, except take the torque and pressure readings at the right and left stops instead of either side of center.

SPECIFICATIONS

LUBRICANT/ADHESIVE/CLEANER SPECIFICATIONS

Description	Part Number	Ford Specification
MERCON® Power Steering Fluid	XT-2-QDX	MERCON®
Standard Transmission Lubricant (SAE 80W)	D8DZ-19C547-A	ESP-M2C83-C
Ford Multi-Purpose Grease	DOAZ-19584-AA	ESB-M1C93-A

STEERING GEAR SPECIFICATIONS

Description	Specification
Type	Recirc. Ball Torsion Bar
Ratio	17:1
Turns of Steering Wheel (Lock to Lock — Linkage Disconnected)	4
Fluid Capacity (Included in Pump Reservoir Fill)	0.75L (1.6 Pint Approx.)
Worm Bearing Preload (Overall Input Shaft Torque with Sector Shaft Removed)	0.45-1.0 N·m (4-9 Lb-In)[a]
Worm to Piston Preload	0.11-0.34 N·m (1-3 Lb-In)[a]

a Not adjustable in field. Specification given for inspection purpose only.

TORQUE SPECIFICATIONS

Description	N·m	Lb-Ft	Lb-In
Gear to Flex Coupling Bolt	41-57	30-42	—
Steering Gear to Frame Bolt	73-90	54-66	—
Sector Shaft Cover Bolts	75-94	55-69	—
Meshload Adjusting Screw Lock Nut	48-61	35-45	—
Valve Housing to Gear Housing Bolt	48-67	35-49	—
Valve Housing Attaching Bolt	40-60	30-44	—
Race Retaining Nut	75-122	55-90[a]	—
Return Line to Gear	27-41	20-30	—
Pitman Arm to Sector Shaft Arm Nut	230-310	170-228	—

(Continued)

SPECIFICATIONS (Continued)

TORQUE SPECIFICATIONS (Cont'd)

Description	N·m	Lb-Ft	Lb-In
Ball Return Guide Clamp Screw	5-7	—	45-61
Setscrew Race Nut	1.7-2.8	—	15-25
Hose Clamps	1.4-2.7	—	12-24

a Specified torque — Because the length of the tool required to tighten the nut will affect the observed torque reading on the torque wrench, the torque reading should be computed using the length of the torque wrench and the nominal specified torque as follows using tool T66P-3553-B: the torque reading equals (length of torque wrench x 98 N·m [72 lb-ft]) divided by (length of torque wrench + 14 cm [5.5 inches]).

SPECIAL SERVICE TOOLS/EQUIPMENT

SPECIAL SERVICE TOOLS REQUIRED

Tool Number/ Description	Illustration
T57L-500-B Bench Mounted Holding Fixture	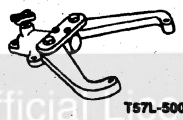 T57L-500-B
T58L-101-B Puller	 T58L-101-B
T59L-100-B Impact Slide Hammer	 T59L-100-B
T64P-3590-F Pitman Arm Puller	 T64P-3590-F
T65P-3524-A Input Shaft Bearing/Seal Tool Consists of: T65P-3524-A1, Seal Replacer T65P-3524-A2, Bearing Replacer T65P-3524-A3, Driver Handle	 -A3 -A2 -A1 T65P-3524-A

(Continued)

SPECIAL SERVICE TOOLS REQUIRED (Cont'd)

Tool Number/ Description	Illustration
T66P-3553-B Adjuster and Lock Nut Wrench	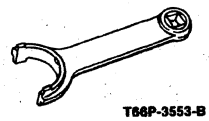 T66P-3553-B
T66P-3553-C Valve Housing to Piston Spacer	 T66P-3553-C
T74P-3504-L Brass Tube Seat Remover	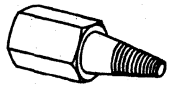 T74P-3504-L
T74P-3504-M Brass Tube Seat Replacer	 T74P-3504-M
T75L-3517-A Seal Replacement Set Consists of: T75L-3517-A1, Mandrel T75L-3517-A2, Ring Pusher T75L-3517-A3, Spacer Replacer T75L-3517-A4, Sizing Tube	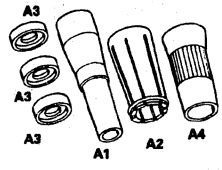 A3 A3 A3 A1 A2 A4 T75L-3517-A
T77L-3576-A Sector Shaft Seal Replacer	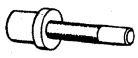 T77L-3576-A

SPECIAL SERVICE TOOLS DESIRED

Tool Number	Description
D79L-7000-A	Retaining Ring Pliers
D81T-33610-A	Power Steering Analyzer

Official Licensed Part Ford Motor Company

SECTION 11-02C Steering Pump, Power, ZF

SUBJECT	PAGE
VEHICLE APPLICATION	11-02C-1
DESCRIPTION AND OPERATION	
Steering Pump	11-02C-1
DIAGNOSIS AND TESTING	
Steering System, Power	11-02C-1
REMOVAL AND INSTALLATION	
Hoses, Pressure and Return	11-02C-2
Reservoir, Pump Remote Oil	11-02C-2
Steering Pump, Power	11-02C-1
DISASSEMBLY AND ASSEMBLY	
Pump	11-02C-3
CLEANING AND INSPECTION	
Pump Flushing	11-02C-7
ADJUSTMENTS	
Drive Belt Tension	11-02C-7
SPECIFICATIONS	11-02C-7
SPECIAL SERVICE TOOLS/EQUIPMENT	11-02C-7

VEHICLE APPLICATION

F-Super Duty Motorhome

DESCRIPTION AND OPERATION

Steering Pump

The ZF power steering pump (3A674) has been specially designed to supply pressurized oil to the power steering and brake hydro-boost units.

The ZF power steering pump is belt-driven by the engine's crankshaft. As the driven shaft rotates the power steering pump rotor (3D607), the slipper vanes inside the power steering pump also move. The centrifugal force and pressurized oil force the slipper vanes against the track of the cam ring. The oil passes from the two pressure chambers to the area between the rear cover and faceplate, pressing against the cam ring at operating pressure. The oil then passes through a power steering pump valve (3A561) to the pressure line.

Ford Motor Company

DIAGNOSIS AND TESTING

Steering System, Power

Refer to Section 11-00.

REMOVAL AND INSTALLATION

Steering Pump, Power

Removal

1. Using a suction gun, remove as much fluid as possible from the power steering oil reservoir (3A697) through the filler opening, or remove the power steering return line hose (3A005) to drain the power steering oil reservoir.
2. Disconnect the power steering pressure hose (3A719) from the power steering pump (3A674).
3. Disconnect the power steering return line hose from the power steering pump if it was not disconnected in Step 1.
4. Position power steering return line hose and power steering pressure hose in a raised position, or plug disconnected ends to prevent the fluid from draining out.
5. Loosen the power steering pump pivot bolt and adjusting bolt. Remove the drive belt (8620).

REMOVAL AND INSTALLATION (Continued)

6. Remove the two power steering pump mounting bolts, and remove the power steering pump and power steering pump bracket (3A732).

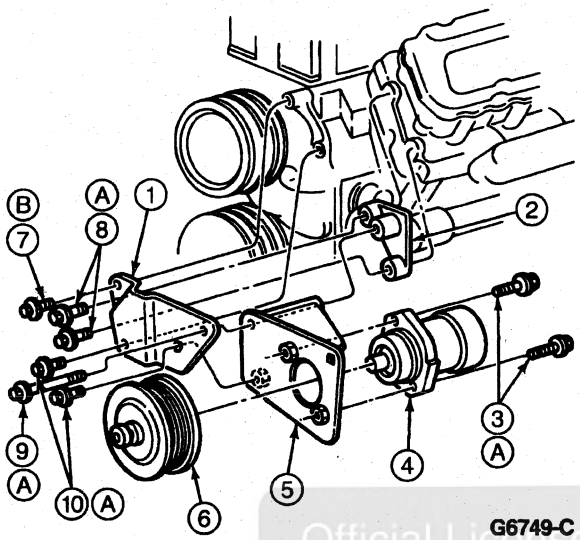

G6749-C

Item	Part Number	Description
1	3C511	Power Steering Pump Support
2	3E602	Pump Rear Support
3	N800199-S8M	Bolt
4	3A674	Power Steering Pump
5	3A732	Power Steering Pump Bracket
6	3A733	Power Steering Pump Pulley
7	370608-S2	Bolt
8	57727-S2	Bolt
9	383721-S2	Bolt
10	N605800-S2	Bolt
A	—	Tighten to 28-41 N·m (21-30 Lb-Ft)
B	—	Tighten to 41-61 N·m (30-45 Lb-Ft)

Installation

1. Install the power steering pump and power steering pump bracket. Tighten the pump mounting bolts to 28-41 N·m (21-30 lb-ft).
2. Verify that the automatic belt tensioner arm moves freely throughout its operating range. If binding is noted, refer to Section 03-05 in the Powertrain, Drivetrain Manual.
3. Install the drive belt.
4. Connect power steering return line hose and power steering pressure hose to the power steering pump.
5. Fill power steering oil reservoir with Premium Power Steering Fluid E6AZ-19582-AA or equivalent meeting Ford Specification ESW-MC233-F to approximately 1.9 liters (2 quarts).
6. If the system requires flushing, refer to Section 11-00.

Reservoir, Pump Remote Oil

NOTE: This procedure refers to remote reservoir used with direct drive pumps.

Removal

1. Using suction gun, remove fluid from the filler opening.
2. With container nearby, disconnect return hose from reservoir and drain into container.
3. Disconnect supply hose from reservoir and drain into container.
4. Remove fasteners and reservoir from bracket.

Installation

1. Inspect hoses. If swollen, abraded, or deteriorated, replace.
2. Install reservoir on bracket and install fasteners.
3. Connect supply and return hoses to reservoir and tighten clamps.
4. Fill reservoir with Motorcraft MERCON® ATF XT-2-QDX or MERCON® equivalent.
5. Install filler cap.

Hoses, Pressure and Return

Always tag power steering pressure hoses (3A719) and power steering return line hoses (3A005) before removal so they can be easily connected to their proper ports during installation.

Refer to the following illustration for removal and installation.

Official Licensed Product

REMOVAL AND INSTALLATION (Continued)

Power Steering System

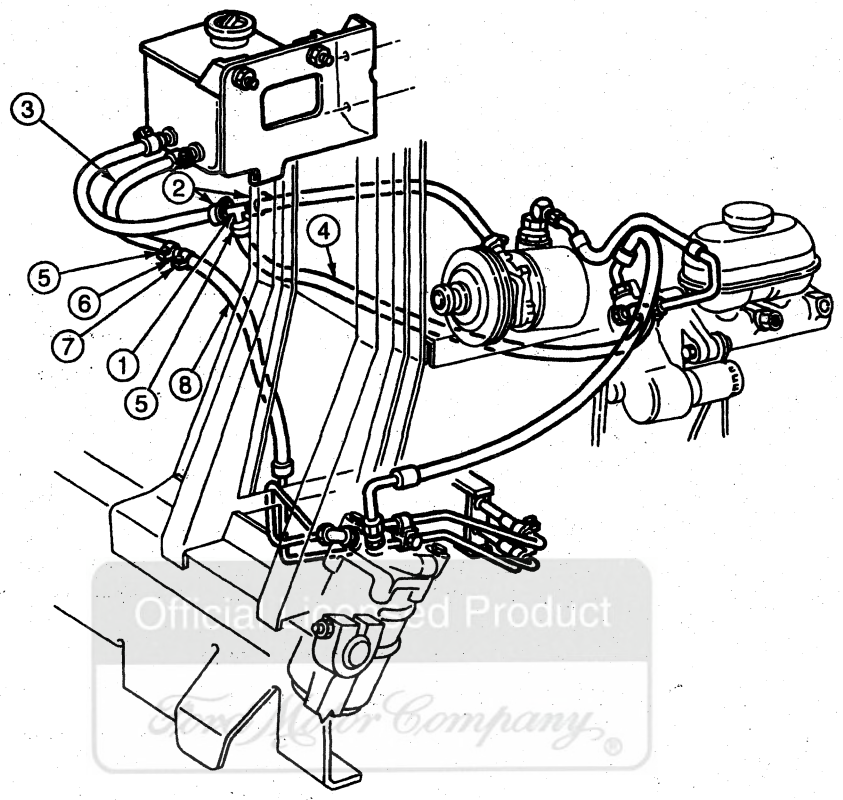

Official Licensed Product
Ford Motor Company

G7729-A

Item	Part Number	Description
1	389344-S100	Tee
2	97241-S8	Clamp
3	3A005	Power Steering Return Line Hose (23-Inch)
4	3A005	Power Steering Return Line Hose (34-Inch)

(Continued)

Item	Part Number	Description
5	390462-S100	Clamp
6	3A713	Power Steering Return Hose
7	376240-S	Clamp
8	3A713	Power Steering Return Hose

DISASSEMBLY AND ASSEMBLY

Pump

SPECIAL SERVICE TOOL(S) REQUIRED

Description	Tool Number
Steering Pump Pulley Remover	T69L-10300-B
Steering Pump Pulley Replacer	T65P-3A733-C

Disassembly

1. **CAUTION: To ensure correct reassembly, record or mark all information as specified in the procedure.**

   NOTE: Clean all dirt and oil from the external surface of the power steering pump (3A674) after removal. Handle all pump parts carefully to avoid nicks, burrs, scratches and dirt.

   Tip the power steering pump to drain all oil from the intake tube. Rotate shaft to remove oil from internal cavities.

DISASSEMBLY AND ASSEMBLY (Continued)

2. **CAUTION: Do not clamp on the power steering pump or power steering pump pulley (3A733).**

   Using the power steering pump bracket (3A732), clamp the power steering pump into a bench vise.

3. Remove power steering pump pulley with Steering Pump Pulley Remover T69L-10300-B.

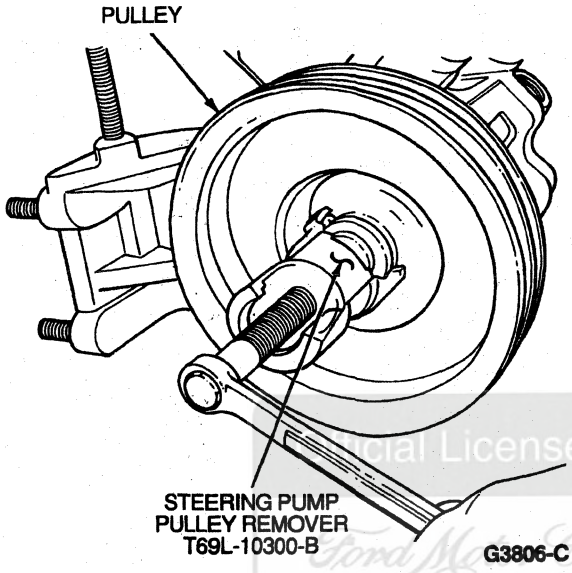

4. Push in on the pump rear cover to compress power steering pump flow control valve spring (3D586).
5. Using pliers, remove hook spring ring from radial groove in power steering pump housing (3A643).

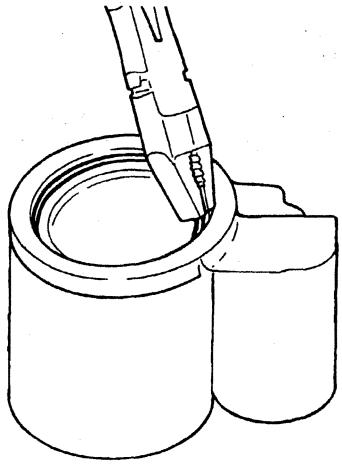

6. Remove cover and power steering pump flow control valve spring. Remove internal O-ring and backup ring from rear cover. O-ring is inboard of backup ring.

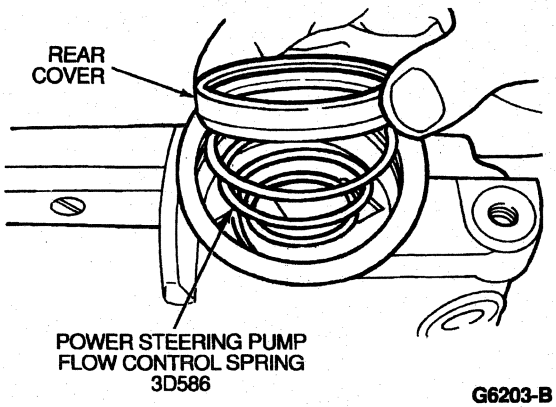

7. Remove the circlip from the groove.

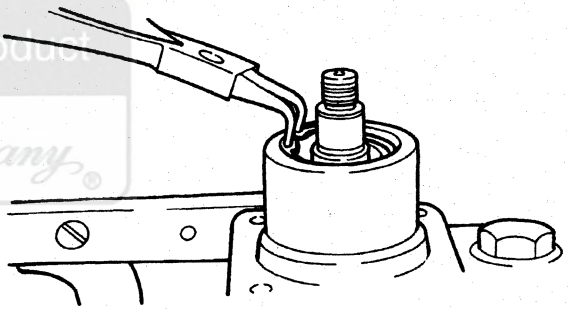

8. Turn the power steering pump housing over and remove the rear faceplate. Remove O-ring and backup ring for the rear faceplate from the power steering pump housing.

Official Licensed Product Ford Motor Company

DISASSEMBLY AND ASSEMBLY (Continued)

9. NOTE: The O-ring is outboard of the backup ring. Check direction of rotation (arrow on cam ring) and location of the set pin.

   Remove the rotor assembly (rotor, cam ring, vanes and set pin) and front faceplate from the power steering pump housing.

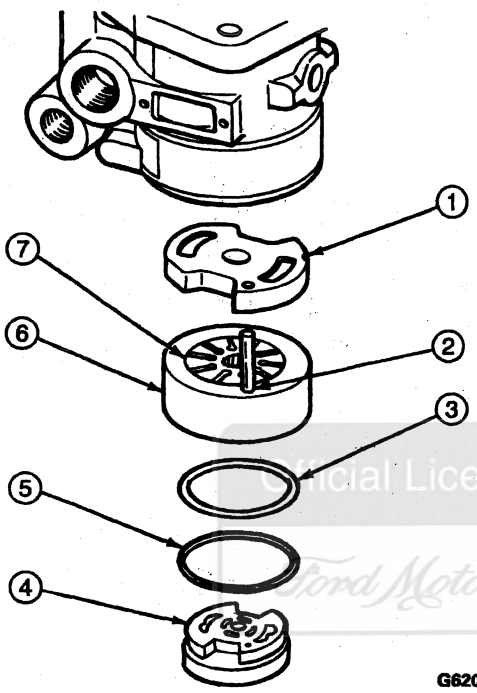

G6204-C

Item	Part Number	Description
1	—	Front Faceplate (Part of 3A674)
2	—	Set Pin (Part of 3A674)
3	—	Backup Ring (Part of 3A674)
4	—	Rear Faceplate (Part of 3A674)
5	—	O-Ring (Part of 3A674)
6	—	Cam Ring (Part of 3A674)
7	3D607	Power Steering Pump Rotor

10. Clamp driveshaft in vice (use soft jaws) and, with a soft mallet, tap on the power steering pump housing to remove the driveshaft from the power steering pump housing.

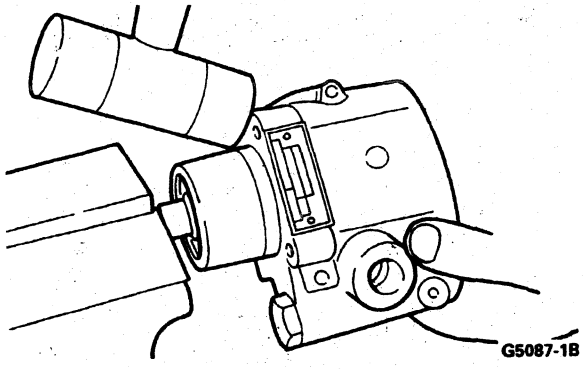

G5087-1B

11. If the ball bearing is to be replaced, remove the retaining ring and press the bearing from the driveshaft.

BEARING RETAINING RING REMOVAL

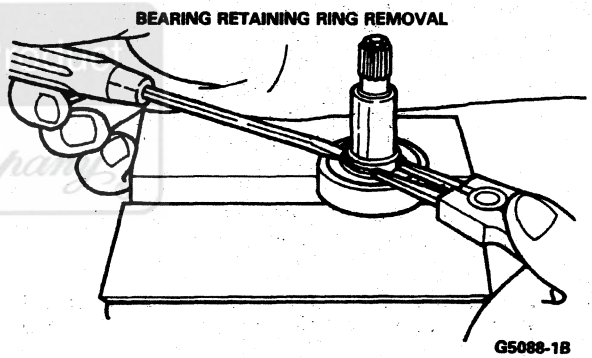

G5088-1B

12. If the shaft seal requires service, pry the seal from the power steering pump housing. Discard the seal.
13. If the needle bearing requires service, press the needle bearing from the power steering pump housing.

Official Licensed Publication
Ford Motor Company

DISASSEMBLY AND ASSEMBLY (Continued)

ZF Power Steering Pump, Disassembled View

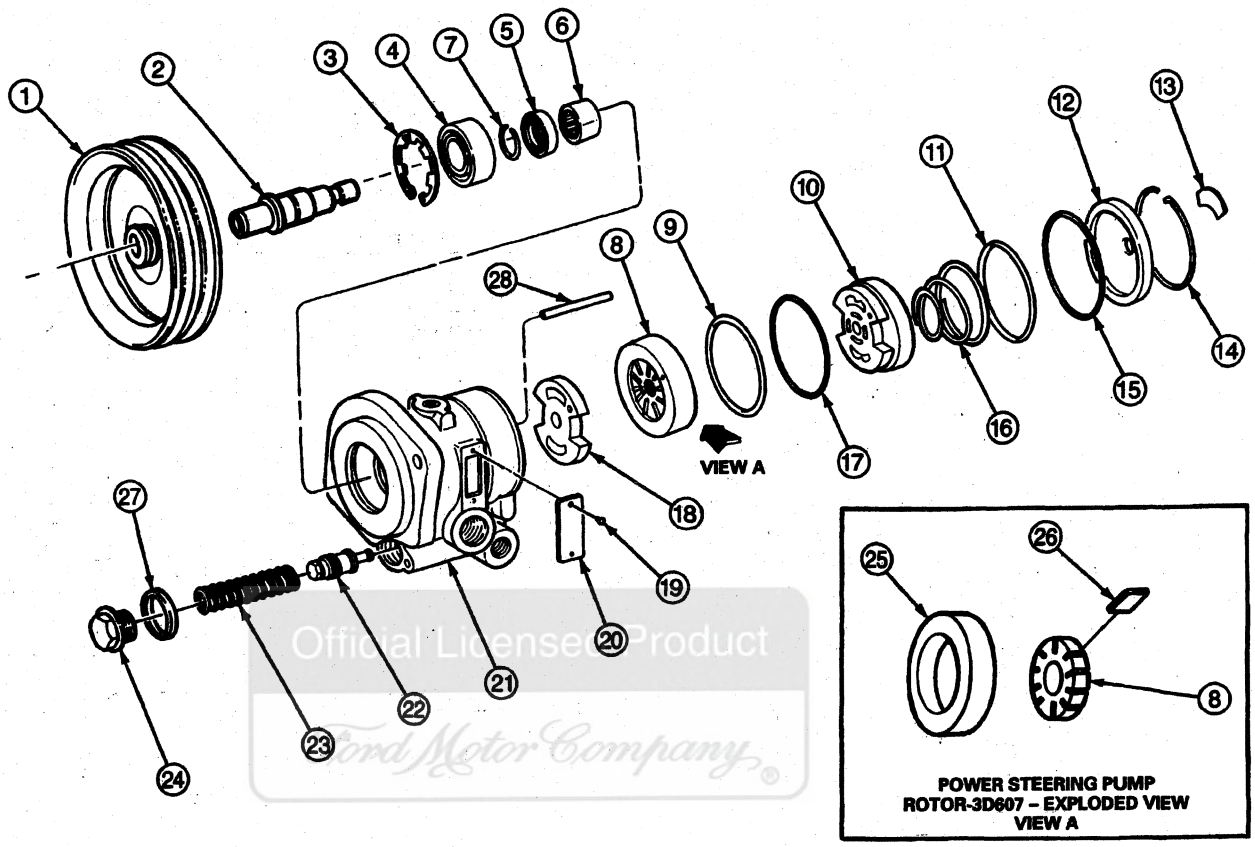

Official Licensed Product
Ford Motor Company

Item	Part Number	Description
1	3A733	Power Steering Pump Pulley
2	—	Driveshaft (Part of 3A674)
3	—	Circlip (Part of 3A674)
4	—	Ball Bearing (Part of 3A674)
5	—	Shaft Seal (Part of 3A674)
6	—	Needle Bearing (Part of 3A674)
7	—	Retaining Ring (Part of 3A674)
8	3D607	Power Steering Pump Rotor
9	—	Backup Ring (Part of 3A674)
10	—	Rear Faceplate (Cover Side) (Part of 3A674)
11	—	O-Ring (Part of 3A674)
12	—	Cover (Part of 3A674)
13	—	Label (Part of 3A674)
14	—	Hook Spring Ring (Part of 3A674)

(Continued)

Item	Part Number	Description
15	—	Backup Ring (Part of 3A674)
16	—	Pressure Spring (Part of 3A674)
17	—	O-Ring (Part of 3A674)
18	—	Faceplate Drive Side (Part of 3A674)
19	—	Pin (Part of 3A674)
20	—	Plate (Part of 3A674)
21	3A643	Power Steering Pump Housing
22	—	Valve Piston (Part of 3A674)
23	—	Pressure Spring (Part of 3A674)
24	—	Screw Plug (Part of 3A674)
25	—	Cam Ring (Part of 3A674)
26	—	Vanes (10) (Part of 3A674)
27	—	Seal Ring (Part of 3A674)
28	—	Set Pin (Part of 3A674)

DISASSEMBLY AND ASSEMBLY (Continued)

Assembly

1. If removed, press a new needle bearing into power steering pump housing.
2. If removed, install a new shaft seal in the power steering pump housing.
3. If removed, press a new bearing onto the driveshaft. Install the retaining ring in the driveshaft groove.
4. Install the driveshaft and bearing assembly into power steering pump housing.
5. Install the bearing circlip in the groove.
6. Install O-ring and backup ring on the rear faceplate in accordance with disassembled view.
7. Install the set pin, front faceplate and power steering pump rotor (3D607) into power steering pump housing. The cam ring of the power steering pump rotor must be installed with the arrow pointed in the direction of rotation.
8. Install the O-ring and backup ring in the rear cover housing in accordance with disassembled view.
9. Place the rear pressure spring in the rear faceplate. Position the rear cover in the housing.
10. Press down on the rear cover plate. Install the hook spring ring in the groove in power steering pump housing.
11. Press on the power steering pump pulley with Steering Pump Pulley Replacer T65P-3A733-C.

CLEANING AND INSPECTION

Pump Flushing

Refer to Section 11-00.

ADJUSTMENTS

Drive Belt Tension

Refer to Section 03-05 in the Powertrain, Drivetrain Manual for automatic belt tensioner adjustments.

SPECIFICATIONS

LUBRICANT/ADHESIVE/CLEANER SPECIFICATIONS

Description	Part Number	Ford Specification
Premium Power Steering Fluid	E6AZ-19582-AA	ESW-MC233-F
Motorcraft MERCON® ATF	XT-2-QDX	MERCON®

TORQUE SPECIFICATIONS

Description	N·m	Lb-Ft
Power Steering Pump to Bracket Mounting Bolts	41-61	30-45
Power Steering Pump Support (Front) to Pump Rear Support Mounting Bolts	41-61	30-45
Power Steering Pump Retaining Bolt	28-41	21-30
Power Steering Pump Support to Bracket Retaining Bolt	41-61	30-45

SPECIAL SERVICE TOOLS/EQUIPMENT

SPECIAL SERVICE TOOLS REQUIRED

Tool Number/ Description	Illustration
T65P-3A733-C Power Steering Pump Pulley Replacer	T65P-3A733-C
T69L-10300-B Power Steering Pump Pulley Remover	T69L-10300-B

SECTION 11-02D Steering Gear, Integral Power, Ross TAS40

SUBJECT	PAGE
VEHICLE APPLICATION	11-02D-1
DESCRIPTION AND OPERATION	
Hoses, Pressure and Return	11-02D-1
Hydraulic Operation	11-02D-2
Mechanical Operation	11-02D-1
Pressure Relief Valve Operation	11-02D-4
Rotary Valve	11-02D-3
Steering System, Power	11-02D-1
DIAGNOSIS AND TESTING	
Steering System, Power	11-02D-4
REMOVAL AND INSTALLATION	
Input Shaft Seal	11-02D-4
Rotor Shaft Seal	11-02D-8
Steering Gear	11-02D-8
DISASSEMBLY AND ASSEMBLY	
Adjusting Screw and Retainer	11-02D-25
Final Adjustment	11-02D-36
Housing Ports, Plugs, Screws and Fittings	11-02D-35
Housing Roller Bearing or Retaining Ring Replacement	11-02D-34

SUBJECT	PAGE
DISASSEMBLY AND ASSEMBLY (Cont'd.)	
Poppet Component Replacement	11-02D-26
Steering Gear	11-02D-11
Valve Housing/Steering Gear Input Worm Gear and Rack	11-02D-28
CLEANING AND INSPECTION	
Pump Flushing	11-02D-38
Steering Gear	11-02D-37
Steering Gear Housing	11-02D-39
Steering Gear Input Shaft and Control	11-02D-39
Steering Gear Sector Shaft	11-02D-39
System Flushing	11-02D-38
ADJUSTMENTS	
Drive Belt Tension	11-02D-39
In-Vehicle Adjustment	11-02D-41
Poppet Valve Manual Readjustment	11-02D-40
Sector Shaft Adjustment	11-02D-39
Valve Housing Adjustment	11-02D-41
SPECIFICATIONS	11-02D-42
SPECIAL SERVICE TOOLS/EQUIPMENT	11-02D-42

Official Licensed Product Ford Motor Company

VEHICLE APPLICATION

F-Super Duty Motorhome

DESCRIPTION AND OPERATION

Steering System, Power

TAS power steering gears (3504) are the latest design in the Ross family of integral hydraulic power steering gears. Integral hydraulic power steering means that the gear contains a manual steering mechanism, a hydraulic control valve and a hydraulic power cylinder, all in a single, compact package.

Hoses, Pressure and Return

The power steering hoses use O-ring seals at the quick connect fittings. There are two possible leak points at the steering gear fittings.

A leak might occur between the power steering hose (pressure or return hose) and the hose nut, or between the hose nut and the aluminum steering gear housing (3548) or pump outlet fitting.

Mechanical Operation

Power is transmitted to the steering gear sector shaft (3575) by gear teeth in the rack piston. The gear teeth in the rack piston mate with the teeth on the steering gear sector shaft. Fluid from the engine-driven power steering pump (3A674) is directed to the power cylinder via the control valve, which is concentric to the power steering gear input shaft.

DESCRIPTION AND OPERATION (Continued)

When force is exerted on the steering wheel (3600) to start a steering maneuver, the force is transmitted to the power steering gear input shaft of the steering gear (3504). The power steering gear input shaft is connected to the worm by a torsion bar centering device and applies a rotational force to the worm through this connection. In response to this rotational force, the steering gear input worm gear and rack (3524), acting through the recirculating ball mechanism, tries to move the rack piston axially. The rack piston axial movement is resisted by its engagement to the steering gear sector shaft. Because of this resistance, the torsion bar is twisted by the power steering gear input shaft.

The power steering gear input shaft is also the inner member (spool) of the rotary control valve. The outer valve member is integral with the steering gear input worm gear and rack and rotates as a unit. As the torsion bar transmits rotational force from the power steering gear input shaft to the steering gear input worm gear and rack, it acts as a spring, deflecting and allowing the power steering gear input shaft to rotate relative to the steering gear input worm gear and rack and valve unit. This relative rotation between the power steering gear input shaft and the steering gear input worm gear and rack actuates the control valve.

Hydraulic Operation

The control valve is an open-center type and when it is in neutral position, the inlet and the outlet ports and both cylinder cavities are interconnected and there is no flow going to either cylinder cavity. However, fluid is circulated from the power steering pump (3A674) through the control valve and back to the power steering oil reservoir (3A697). The pressure in both cylinder cavities is equal and low, sufficient only to overcome friction in the lines and fittings from the outlet port to the power steering oil reservoir.

As the valve is actuated, the valving edges begin to close, restricting flow through the control valve. This restriction directs a portion of the fluid flow from the power steering pump to one or the other cylinder cavities. That portion of the flow that is not required for the steering maneuver passes through the control valve and back to the power steering oil reservoir. At the same time, the other cylinder cavity is opened to the return port and expels fluid back to the power steering oil reservoir.

The amount of flow that is directed to the cylinder cavity is proportional to the speed at which the steering wheel (3600) is being turned. Pressure required to complete a steering maneuver is dependent on the amount of resistance presented by the steering wheel. The control valve senses these requirements and supplies fluid to the cylinder at the proper flow rate and pressure.

As fluid is supplied to the cylinder, the rack piston moves axially, rotating the steering gear sector shaft (3575) and steering the vehicle. The steering gear input worm gear and rack (3524) is now able to rotate in response to the force being applied by the rack piston through the recirculating ball and helical screw. Steering action will continue in this manner as long as the driver continues to turn the steering wheel. When the steering maneuver is completed and effort on the steering wheel is relaxed, the torsion bar brings the control valve back to its neutral position.

If the steered wheels are subjected to shock loads, forces are transmitted through the steering gear sector shaft to the rack piston and on to the worm. This actuates the control valve, which directs high pressure fluid to the proper cylinder to resist the shock load. By absorbing the shock loads hydraulically, objectionable kick-back at the steering wheel is prevented.

The steering gear (3504) is equipped with a pressure relief valve, which limits maximum supply pressure to protect the power steering pump but does not reduce the pressure as the steered wheels approach the axle stops.

Tripping the relief valve maintains a constant pressure in the power cylinder by allowing a portion of the flow from the power steering pump to circulate through the steering gear and back to the power steering oil reservoir. Since fluid is allowed to circulate through the steering gear, the pressure relief valve is not required to activate when the wheels reach full turn and the amount of heat generated by the power steering pump is reduced greatly.

The TAS steering gear is equipped with two hydraulic relief poppet valves that are automatically set to trip and relieve pressure just before reaching the axle stops. This is achieved after initial installation in the vehicle at the first right and left turn. The pressure relief poppet valves automatically reset themselves within the poppet adjustment limits if the axle stops are reset for increased steering gear travel. These limits are based on acceptable equipment revisions from original factory installations.

Official Licensed Reproduction
Ford Motor Company

DESCRIPTION AND OPERATION (Continued)

Steering Gear Operation

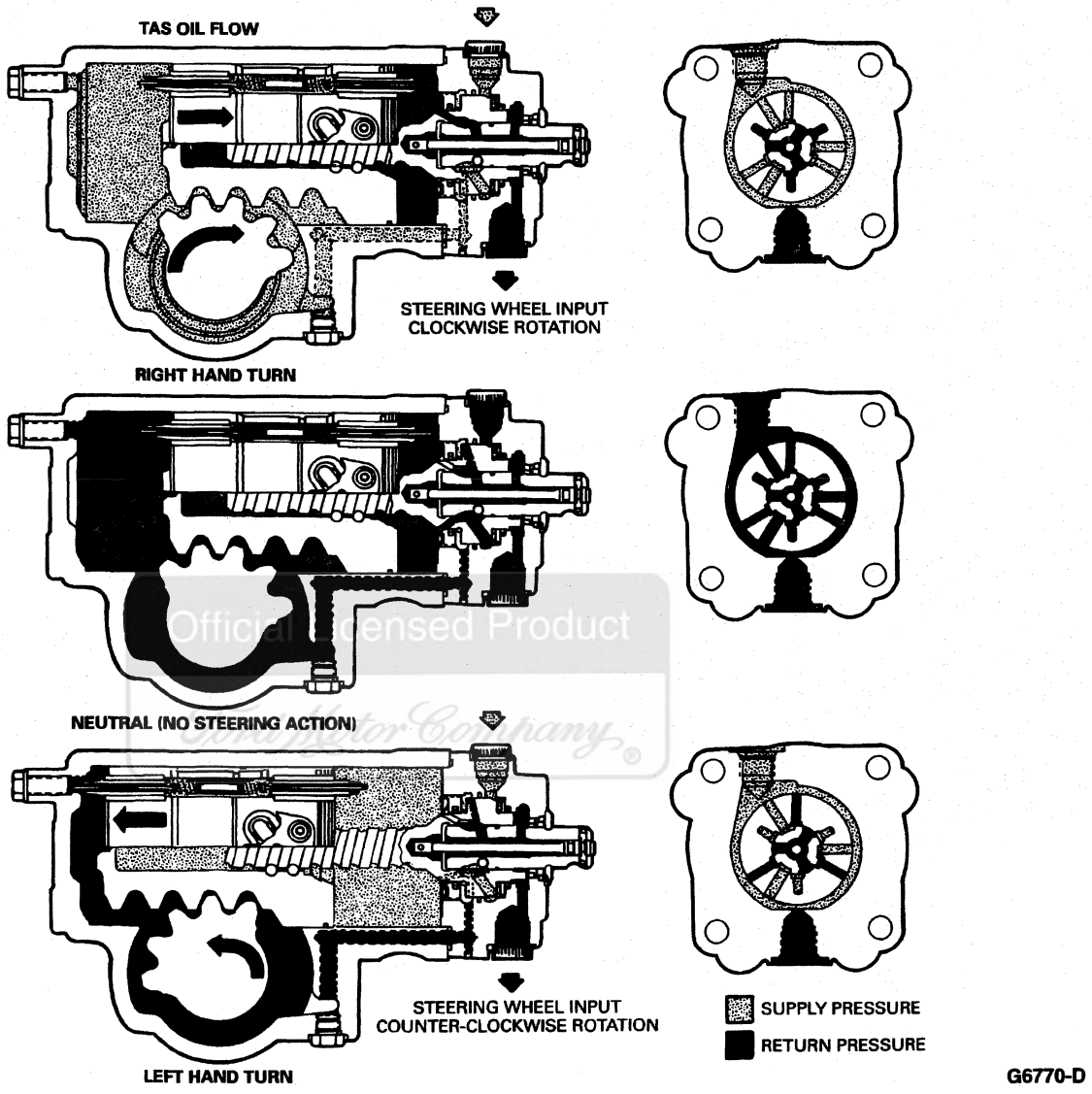

Official Licensed Product
Chrysler Company

Rotary Valve

The rotary control valve combines simplicity of construction with desirable performance characteristics. The speed at which the driver can turn the steering wheel (3600) with power steering pump (3A674) is dependent upon the pump flow (measured in liters per minute, [lpm] or gallons per minute [gpm]) directed to a cylinder cavity. The control valve controls the flow.

The pressure (measured in pounds per square inch [psi] or kPa) required for the steering gear (3504) to steer the vehicle is created by the power steering pump to overcome resistance at the steered wheels. The control valve senses these requirements and directs fluid to the appropriate cylinder cavity in the steering gear (and in the auxiliary cylinder if it is a dual steering system) at the proper flow rate and pressure.

DESCRIPTION AND OPERATION (Continued)

Pressure Relief Valve Operation

The higher pressure a steering gear (3504) can withstand, the more work it can perform. The maximum operating pressure for the TAS40 gear in the F-Super Duty Motorhome is 12,410 kPa (1800 psi). Maximum flow rate is 16 lpm (4.22 gpm).

The TAS series steering gears can steer a vehicle within its front end weight rating through a turn at low speed and engine idle. As the driver turns the steering wheel (3600) faster or slower, more or less fluid will be required by the steering gear.

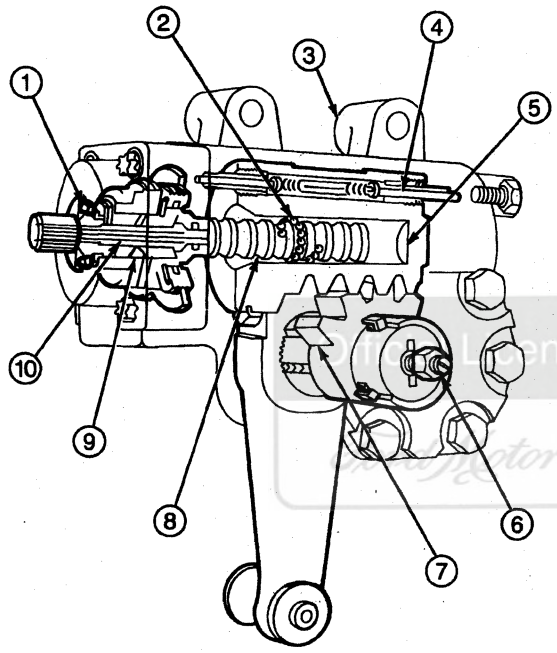

G5117-C

Item	Part Number	Description
1	3D526	Power Steering Gear Input Shaft Seal
2	3647	Recirculating Balls
3	3548	Steering Gear Housing
4	—	Poppets (Unloading Valve) (Part of 3D517)
5	—	Rack Piston (Part of 3D517)
6	3577	Steering Gear Sector Shaft Adjusting Screw
7	—	Sector Shaft Tooth (Part of 3575)
8	3524	Steering Gear Input Worm Gear and Rack
9	3D607	Power Steering Pump Rotor
10	—	Torsion Bar (Part of 3575)

DIAGNOSIS AND TESTING

Steering System, Power

Refer to Section 11-00.

REMOVAL AND INSTALLATION

Input Shaft Seal

NOTE: This procedure uses the pressure of the vehicle's power steering pump (3A674) to force out the input shaft seal. To use this procedure, the power steering pump should have a minimum of 10,342 kPa (1500 psi) available.

Removal

1. Disconnect power steering return hose (3A713) from the steering gear (3504) and plug the power steering return hose. Also cap the return port of the steering gear with a high pressure fitting.

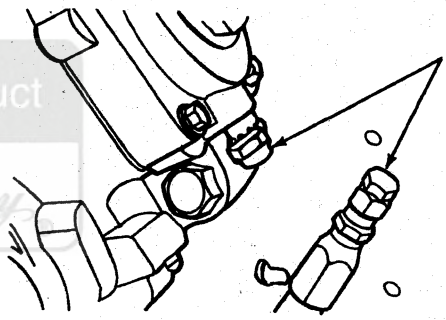

G7885-A

2. Remove the steering column from the power steering gear input shaft.

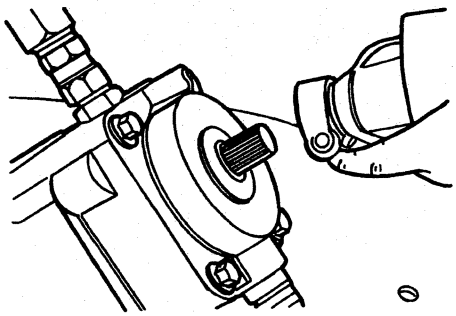

G7886-A

Ford Licensed Product Ford Motor Company

REMOVAL AND INSTALLATION (Continued)

3. Remove the dirt and water seal from the steering gear.

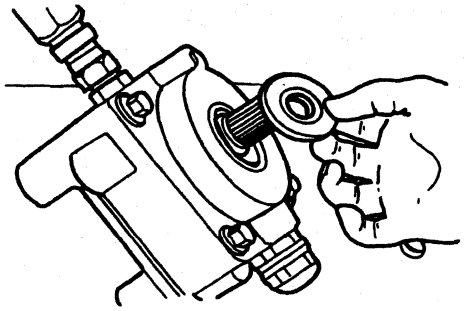

G7887-A

4. **CAUTION: Be careful not to scratch the bore with the screwdriver.**

   Wipe out the grease, and then remove the spiral retaining ring. Use a screwdriver inserted into the notch formed in the end of the ring.

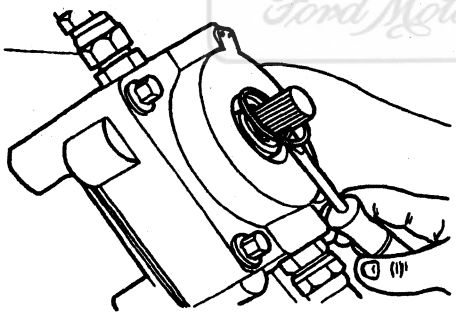

G7888-A

5. Slip the steering column back onto the power steering gear input shaft with the pinch bolt installed, but not tightened.

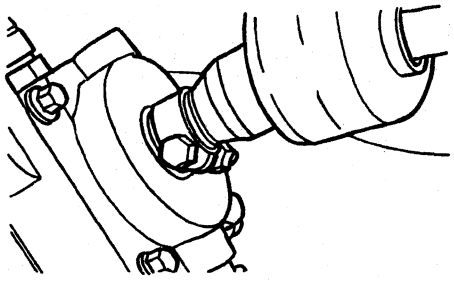

G7889-A

6. Tie or wrap a shop towel around the input shaft area and place a drip pan under the vehicle to catch the oil.

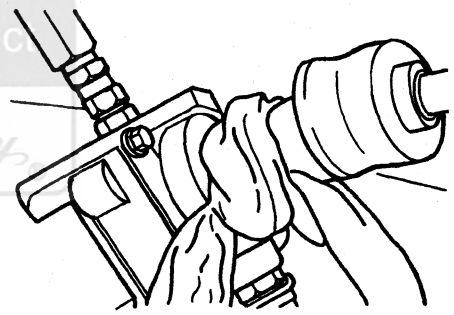

G7890-A

7. **WARNING: DO NOT MIX OIL TYPES. ANY MIXTURE OR ANY UNAPPROVED OIL COULD LEAD TO SEAL DETERIORATION AND LEAKS. A LEAK COULD ULTIMATELY CAUSE LOSS OF FLUID, WHICH COULD RESULT IN A LOSS OF POWER STEERING ASSIST.**

   Add fluid as necessary to the full line on the dipstick.

8. With the vehicle in neutral, momentarily turn the starter (quickly turn off the engine if it starts).

Official Licensed Product
Ford Motor Company

REMOVAL AND INSTALLATION (Continued)

9. Remove the shop towel. Disconnect the steering column, and remove the input shaft seal.

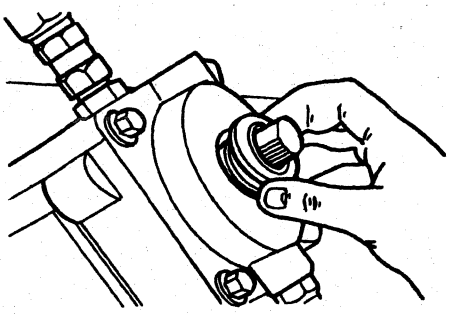

G7891-A

10. Check the seal area of the valve housing for any seal fragments. Remove any fragments that are found.

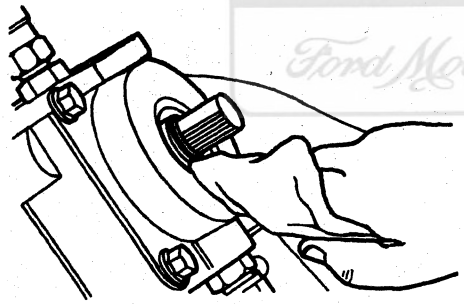

G7892-A

11. Check the seal for heat damage. If the seal is stiff and brittle, and not pliable like the new seal, it is probably heat-damaged. Determine and remedy the cause of excessive heat in the power steering system.

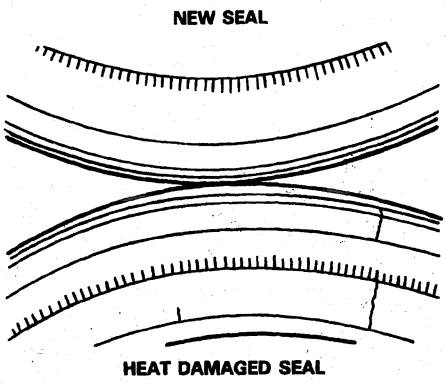

G7893-A

Installation

1. **CAUTION: Do not use a socket to install this seal. You will not be able to control seal installation depth and could cause a leak.**

   Put clean high-temperature industrial grease Mobil Temp 1 or 2, High Temperature Front Axle and Wheel Bearing Grease E8TZ-19590-A or equivalent meeting Ford specification ESA-M1C198-A between the seal lips on the inside diameter of the new input shaft seal and place it over the power steering gear input shaft, garter spring side first. Place Input Seal Installer J37073 over the power steering gear input shaft and against the seal, small diameter end first. Tap the seal installer tool until the tool shoulder is square against the valve housing. Remove any seal material that might have sheared off in the seal bore or retaining ring groove.

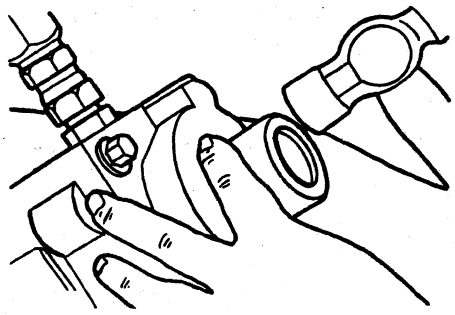

G7894-A

Official Licensed Product
Ford Motor Company

REMOVAL AND INSTALLATION (Continued)

2. Insert new retaining ring into the groove.

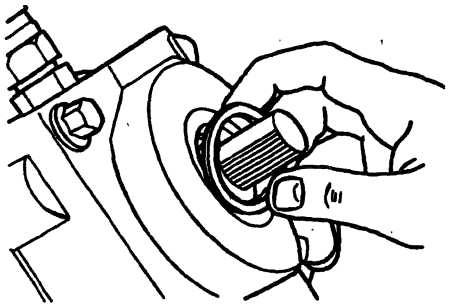

G7895-A

3. Pack the end of the valve housing bore around the power steering gear input shaft with Mobil Temp 1 or 2, High Temperature Front Axle and Wheel Bearing Grease E8TZ-19590-A or equivalent meeting Ford specification ESA-M1C198-A. Apply more of the grease to a new dirt and water seal, and install it over the power steering gear input shaft. Seat it in the groove behind the serrations and against the steering gear housing (3548).

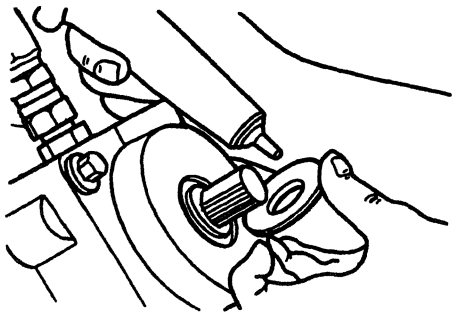

G7896-A

4. Reconnect the steering column to the power steering gear input shaft and tighten the pinch bolt to 42-57 N·m (32-41 lb-ft).

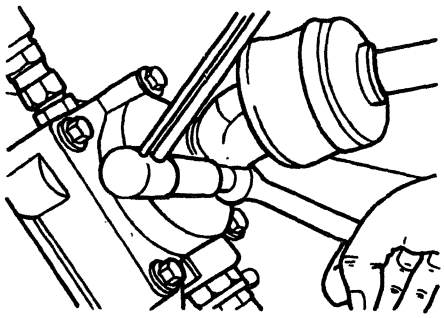

G7897-A

5. Reconnect the power steering return hose to the steering gear return port.

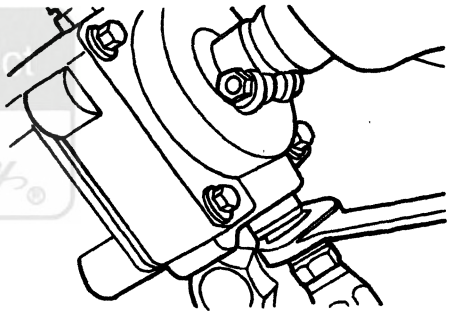

G7898-A

6. **CAUTION: Make sure poppets are set correctly before beginning this procedure.**

   CAUTION: Do not allow the fluid level to drop significantly or run out of the power steering oil reservoir (3A697). This can introduce air into the system.

   Fill the power steering oil reservoir nearly full. Do not steer. Start and run the engine for 10 seconds, then shut it off. Check and refill the power steering oil reservoir. Repeat at least three times, checking the power steering oil reservoir each time.
7. Start the engine and let it idle for two minutes. Do not steer. Shut off the engine and check the fluid level in the power steering oil reservoir. Refill as required.
8. Start the engine again. Steer the vehicle from full left to full right several times. Add fluid as necessary to the full line on the dipstick.

Licensed Product Ford Motor Company

REMOVAL AND INSTALLATION (Continued)

Rotor Shaft Seal

Refer to Steering Gear in the Disassembly and Assembly portion of this section.

Steering Gear

SPECIAL SERVICE TOOL(S) REQUIRED

Description	Tool Number
Pitman Arm Puller	T64P-3590-F

During steering gear removal, observe the following precautions and guidelines:

CAUTION: Never steam clean or high-pressure wash the hydraulic steering or unit. Do not force or abuse the closely fitted parts or damage will result.

CAUTION: Never use a hammer to loosen, remove or install the U-joint from the power steering gear input shaft. Severe damage to the steering gear (3504) can result.

CAUTION: The power steering gear input shaft and steering gear input worm gear and rack (3524) must not be rotated more than one and one-half revolutions while the steering sector shaft arm drag link (3304) is disconnected from the gear assembly. This will prevent possible misadjustments of the automatic poppet system.

- Drain the steering assembly.
- Thoroughly clean off all outside dirt, especially around the fittings.
- Plug all port holes immediately after removing the power steering return hoses (3A713) and power steering pressure hoses (3A719) before removing the steering gear.
- Finish cleaning and dry the steering gear before placing the steering gear on a workbench.

Removal

1. Disconnect the power steering pressure hose at the steering gear.
2. Disconnect the power steering return hose at the steering gear.
3. Disconnect auxiliary rotary cylinder supply and return lines (if so equipped).

Licensed Product

REMOVAL AND INSTALLATION (Continued)

Power Steering Assist Lines

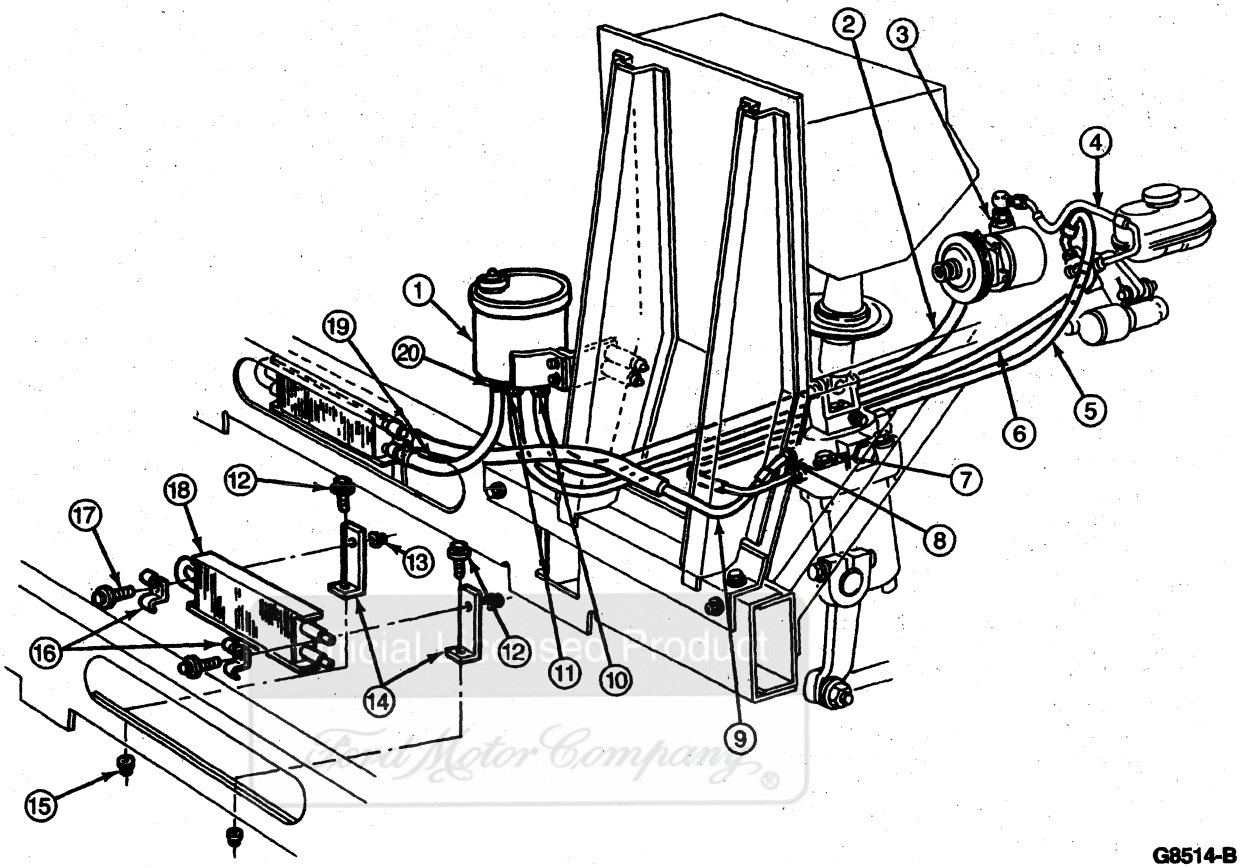

G8514-B

Item	Part Number	Description
1	3A697	Power Steering Oil Reservoir
2	—	Hose, 3/4-Inch Inside Diameter (Part of 3A674)
3	—	Elbow Assy (Power Steering Pump) (Part of 3A674)
4	3A717	Power Steering Right Turn Pressure Hose
5	3A714	Power Steering Left Turn Pressure Hose
6	3A005	Power Steering Return Line Hose
7	—	Connector (Part of 3F524)
8	—	Elbow (Part of 3A674)
9	3A713	Power Steering Return Hose
10	—	Clamps (Part of 3A674)

(Continued)

Item	Part Number	Description
11	—	Clamp (Part of 3A674)
12	—	Bolt, M-10 x 1.25 x 40 (Part of 3D744)
13	—	Nut, M8-1.25 (Part of 3D744)
14	3D744	Power Steering Cooler Bracket
15	—	Nut, M-10 x 1.25 (Part of 3D744)
16	—	Clamp (Power Steering Cooling Tube) (Part of 3D744)
17	—	Bolt, M8-1.25 x 25 (Part of 3D744)
18	3D746	Power Steering Fluid Cooler
19	3A713	Power Steering Return Hose
20	—	Clamps (Part of 3531)

REMOVAL AND INSTALLATION (Continued)

4. **CAUTION: Do not use a hammer on the steering gear sector shaft arm (3590) to remove it from steering gear sector shaft (3575). It can cause internal damage to steering gear. Always use Pitman Arm Puller T64P-3590-F to remove the steering gear sector shaft arm from the steering gear sector shaft.**

   Remove bolt and nut that fasten the steering gear sector shaft arm to the steering gear sector shaft. Remove the steering gear sector shaft arm from steering gear sector shaft using Pitman Arm Puller T64P-3590-F.

5. **CAUTION: Do not pound the intermediate shaft U-joint or input shaft coupling off the power steering gear input shaft. It can cause internal damage to the steering gear.**

   Remove the bolt and the nut holding the U-joint to the power steering gear input shaft.

6. Remove the bolts and the nuts holding the steering gear to the frame side steering gear mounting bracket. Remove the steering gear.

Installation

1. Place the steering gear on the frame side steering gear mounting bracket. Install the bolts, the nuts and the washers and tighten to 299-406 N·m (220-300 lb-ft).
2. **CAUTION: Do not pound the intermediate shaft U-joint or input shaft coupling onto the power steering gear input shaft. It can cause internal damage to the steering gear.**

   Place the intermediate shaft U-joint on the power steering gear input shaft. Tighten to 42-57 N·m (32-41 lb-ft).

3. **WARNING: WHEN USING A CHISEL TO SPREAD A PINCH BOLT-TYPE PITMAN ARM BOSS FOR ASSEMBLY TO THE STEERING GEAR SECTOR SHAFT, MAINTAIN A FIRM GRIP ON THE CHISEL AT ALL TIMES. FAILURE TO DO THIS MAY RESULT IN THE CHISEL FLYING LOOSE, WHICH COULD CAUSE AN INJURY. NEVER LEAVE THE CHISEL WEDGED IN THE PITMAN ARM BOSS. DO NOT USE A HAMMER TO INSTALL THE STEERING GEAR SECTOR SHAFT ARM ON THE STEERING GEAR SECTOR SHAFT. INTERNAL DAMAGE TO STEERING GEAR COULD RESULT.**

   Place the steering gear sector shaft arm on the steering gear sector shaft, making sure the timing mark on the steering gear sector shaft arm aligns with the timing mark on the steering gear sector shaft. Use a chisel to help spread the steering gear sector shaft arm to slide onto the steering gear sector shaft.

4. Install pinch bolt and nut and tighten to 299-406 N·m (220-300 lb-ft).
5. Connect the power steering pressure hose and power steering return hoses to the steering gear.
6. Fill the power steering oil reservoir (3A697) with Motorcraft MERCON® ATF XT-2-QDX or MERCON® equivalent.
7. Start the engine, turn the steering wheel (3600) from left to right and check for fluid leaks.

DISASSEMBLY AND ASSEMBLY

Steering Gear

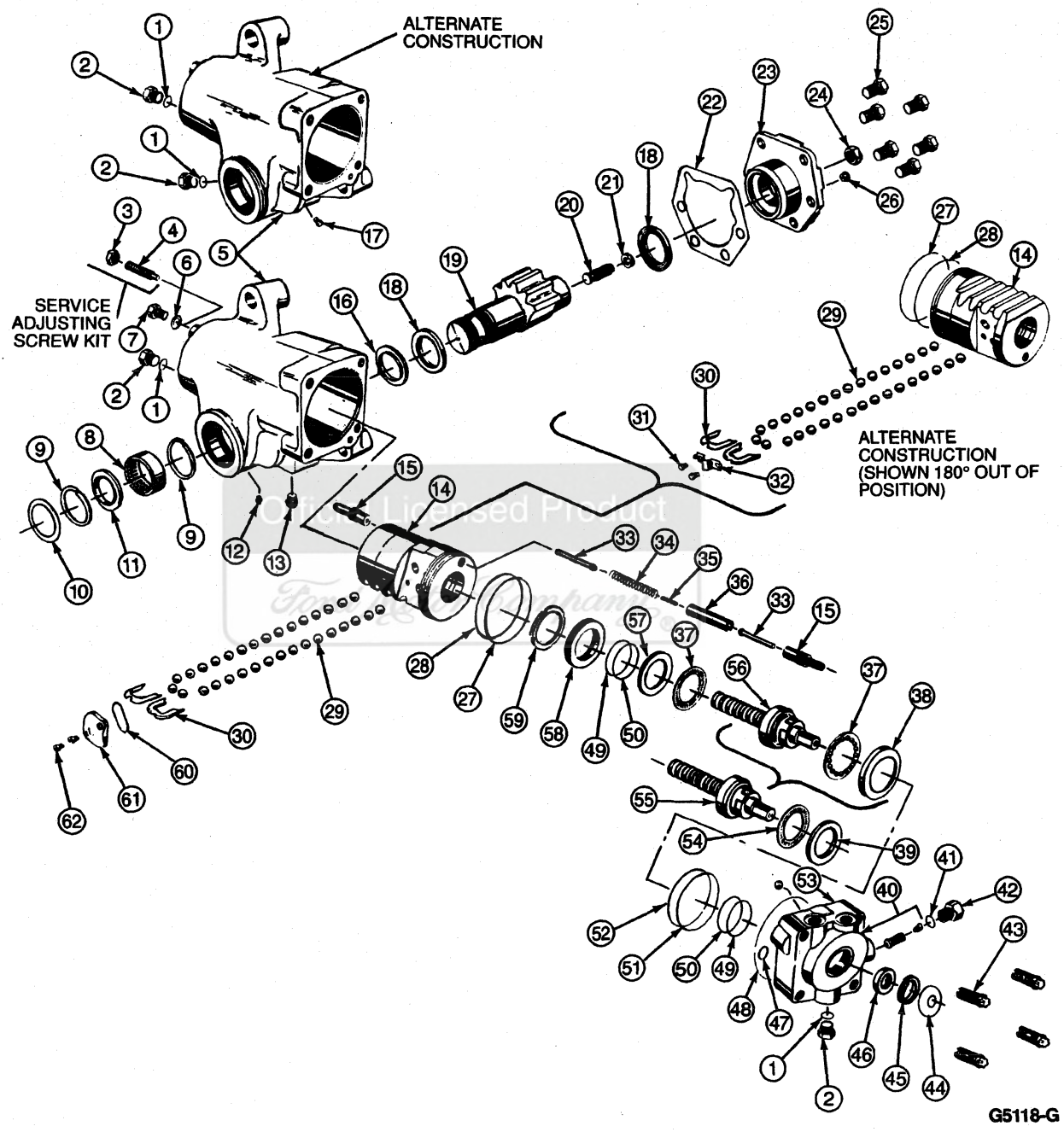

Item	Part Number	Description
1	—	O-Ring (2) (Auxiliary Port Plug) (Part of 3548)
2	—	Auxiliary Port Plug (2) (Part of 3548)

(Continued)

Item	Part Number	Description
3	3610	Service Sealing Jam Nut (Included in Ross Gear Seal Kit No. TAS550001, No. TAS400001 or Equivalent)

(Continued)

DISASSEMBLY AND ASSEMBLY (Continued)

Item	Part Number	Description
4	3577	Service Poppet Adjusting Screw
5	3548	Housing
6	—	Washer (Stop Screw) (Part of 3548)
7	—	Fixed Stop Screw (Poppet) (Part of 3548)
8	3B614	Roller Bearing
9	—	Retaining Ring (2) (Part of 3E501)
10	3738	Dirt and Water Seal (Trunnion) (Included in Ross Gear Seal Kit No. TAS550001, No. TAS400001 or Equivalent)
11	3D519	Dirt Seal (Included in Ross Gear Seal Kit No. TAS550001, No. TAS400001 or Equivalent)
12	—	Grease Fitting (Part of 3548)
13	—	Plug (Auto Bleed) (Part of 3548)
14	3K748	Rack Piston
15	3E623	Poppet Adjuster Seal and Sleeve Assy (2)
16	3E560	Washer (Spacer)
17	—	Bleed Screw (Manual) (Alt.) (Part of 3548)
18	3M575	Seal — Output (2) (Included in Ross Gear Seal Kit No. TAS550001, No. TAS400001 or Equivalent)
19	3575	Sector Shaft
20	3E617	Adjusting Screw (Shaft)
21	3575	Retainer (Adjusting Screw)
22	3581	Gasket (Side Cover) (Included in Ross Gear Seal Kit No. TAS550001, No. TAS400001 or Equivalent)
23	3583	Side Cover and Bushing Assy
24	3583	Jam Nut
25	3E613	Special Bolts (6) (Side Cover)
26	3E561	Vent Plug (Side Cover) (Included in Ross Gear Seal Kit No. TAS550001, No. TAS400001 or Equivalent)
27	3B541	Seal Ring (Rack Pinion) (Included in Ross Gear Seal Kit No. TAS550001, No. TAS400001 or Equivalent)
28	3B541	O-Ring (Backup) (Included in Ross Gear Seal Kit No. TAS550001, No. TAS400001 or Equivalent)

(Continued)

Item	Part Number	Description
29	—	Ball (29 or 31) (Part of 3E501)
30	3523	Ball Return Guide Halves (2) (Included in Ross Gear Seal Kit No. TAS550001, No. TAS400001 or Equivalent)
31	—	Hex-Head Bolt (2) (Clip) (Alt.) (Part of 3E501)
32	—	Ball Return Guide Clip (Alt.) (Included in Ross Gear Seal Kit No. TAS550001, No. TAS400001 or Equivalent)
33	3E622	Poppet (2)
34	3E624	Poppet Spring
35	3K651	Spacer Rod
36	3E625	Push Tube
37	3B673	Thrust Bearing (1 or 2)
38	3321	Thrust Washer (Thick)
39	3321	Ball Bearing Race (Alt.)
40	3K527	Relief Valve (2-Piece)
41	3589	O-Ring (Relief Valve) (Included in Ross Gear Seal Kit No. TAS550001, No. TAS400001 or Equivalent)
42	3E561	Relief Valve Cap
43	3E617	Bolts (4) (Valve Housing)
44	3K665	Dirt and Water Seal (Input) (Included in Ross Gear Seal Kit No. TAS550001, No. TAS400001 or Equivalent)
45	3C617	Retaining Ring (Included in Ross Gear Seal Kit No. TAS550001, No. TAS400001 or Equivalent)
46	3D631	Seal (Input Shaft) (Included in Ross Gear Seal Kit No. TAS550001, No. TAS400001 or Equivalent)
47	3329	Seal Ring (Valve Housing) (Included in Ross Gear Seal Kit No. TAS550001, No. TAS400001 or Equivalent)
48	—	Seal Ring (Valve Housing) (Included in Ross Gear Seal Kit No. TAS550001, No. TAS400001 or Equivalent) (Part of 3E501)
49	3754	O-Ring (2) (Included in Ross Gear Seal Kit No. TAS550001, No. TAS400001 or Equivalent)
50	—	Seal Ring (2) (Included in Ross Gear Seal Kit No. TAS550001, No. TAS400001 or Equivalent) (Part of 3E501)

(Continued)

Ford Motor Company Material Licensed Product

DISASSEMBLY AND ASSEMBLY (Continued)

Item	Part Number	Description
51	—	O-Ring (Valve Housing) (Included in Ross Gear Seal Kit No. TAS550001, No. TAS400001 or Equivalent) (Part of 3E501)
52	—	Seal Ring (Included in Ross Gear Seal Kit No. TAS550001, No. TAS400001 or Equivalent) (Part of 3E501)
53	—	Valve Housing and Ball Plug Assy (Part of 3504)
54	—	Ball Bearing Assy — Valve Worm (Alt.) (Part of 3E501)
55	—	Input Shaft, Valve Worm Assy (Alt.) (Part of 3504)
56	—	Input Shaft, Valve Worm Assy (Part of 3504)

(Continued)

Item	Part Number	Description
57	3321	Thrust Washer (Thin)
58	3K653	Bearing Adjuster
59	—	Adjuster Locknut (Included in Ross Gear Seal Kit No. TAS550001, No. TAS400001 or Equivalent) (Part of 3E501)
60	—	Seal (Ball Return Guide Cap) (Included in Ross Gear Seal Kit No. TAS550001, No. TAS400001 or Equivalent) (Part of 3E501)
61	—	Ball Return Guide Cap (Part of 3E501)
62	—	Torx® Screws (2) (Cap) (Included in Ross Gear Seal Kit No. TAS550001, No. TAS400001 or Equivalent) (Part of 3E501)

Disassembly

1. **CAUTION: Do not clamp against the body of the steering gear housing (3548). This can damage the steering gear housing and cause difficulties during the disassembly and assembly procedures. If mounting boss or flange is not accessible, fabricate and attach a mounting plate to the housing mounting bosses.**

   Put the steering gear (3504) in a vise so that the power steering gear input shaft is in a horizontal direction. Tighten the jaws of the vise on the mounting flange or the boss of the steering gear housing.
2. Put a pan under the steering gear. Unplug the hydraulic ports on the steering gear. Drain the fluid from the steering gear.
3. Use a 3/4-inch or 11/16-inch 12-point socket to rotate the power steering gear input shaft and steering gear input worm gear and rack (3524) until the timing mark on the end of the steering gear sector shaft (3575) is aligned with the timing mark on the end of the housing trunnion.

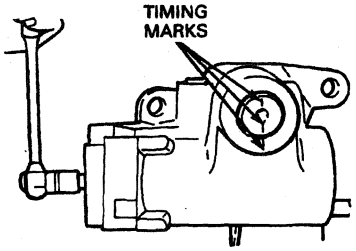

G6806-1A

4. Use a small screwdriver to remove the dirt and water seal from the housing trunnion. Remove any paint or corrosion from the exposed area of the steering gear sector shaft with a fine grade of emery cloth.

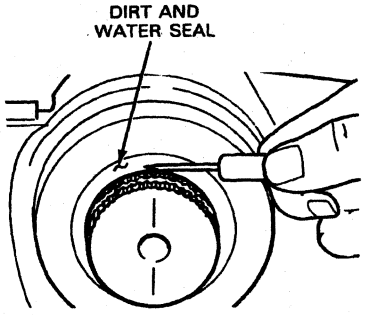

G6807-B

Official Licensed Product

DISASSEMBLY AND ASSEMBLY (Continued)

5. Tape the serrations and the bolt groove of the steering gear sector shaft with one layer of masking tape. The tape should not extend onto the diameter of the sector shaft bearing.

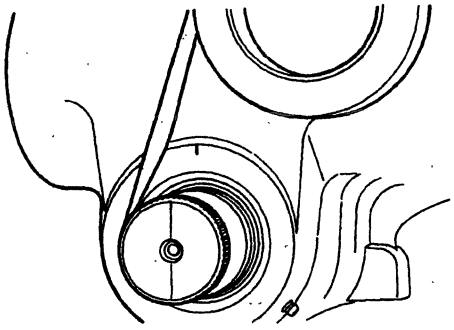

G8405-A

6. Remove the jam nut from the sector shaft adjusting screw.

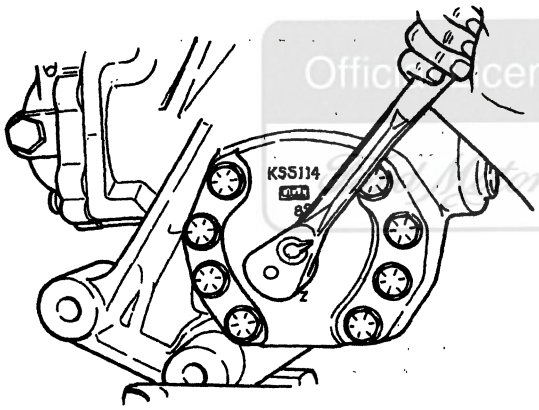

G8406-A

7. NOTE: The bolts that fasten the steering gear housing end cover (3568) to the steering gear housing are equipped with a ring or a washer under the head of the bolt. If you replace one or more bolts, you must replace them with bolts of the same design and length as the bolt being removed. Do not use a substitute.

   NOTE: Be prepared for more fluid drainage.

   Remove the six bolts that fasten the steering gear housing end cover to the steering gear housing.

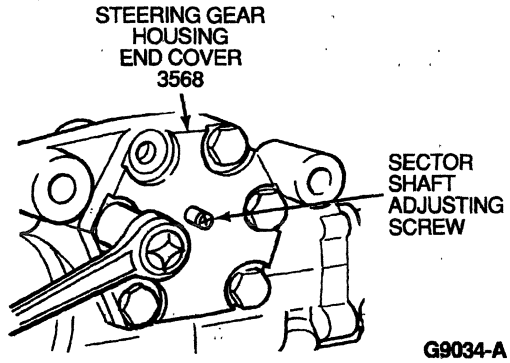

G9034-A

8. Remove the steering gear housing end cover and steering gear sector shaft as a unit from the steering gear. If necessary, tap lightly on the end of the steering gear sector shaft with a soft mallet. Remove and discard side cover gasket.

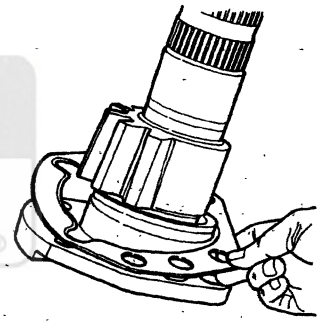

G8407-A

9. Remove and discard vent plug. Remove reverse threaded steering gear sector shaft adjusting screw (3577) by turning the screw clockwise through the steering gear housing end cover. Pull the steering gear sector shaft out of the steering gear housing end cover.

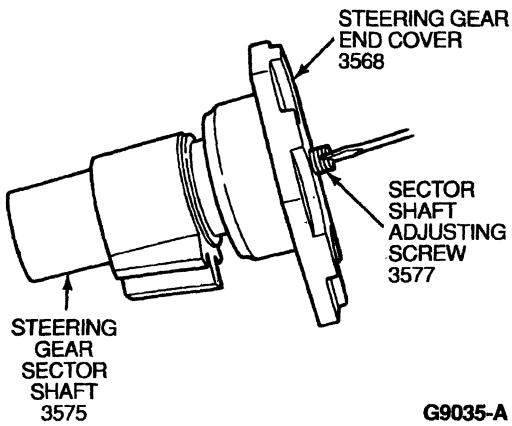

G9035-A

Official Licensed Product Ford Motor Company

DISASSEMBLY AND ASSEMBLY (Continued)

10. **CAUTION: Do not damage the bore or DU bushing when removing the seal.**

    Clamp the steering gear housing end cover in a vise. Place a standard 5/8-inch or 11/16-inch 3/8 drive socket in the center of the steering gear housing end cover. Pry seal out with a rolling head pry bar, using the socket for support. Discard seal and remove the socket.

11. Inspect the steering gear sector shaft for damaged adjusting screw threads. The staked retainer must be locked in place and have no cracks. The adjusting screw must rotate by hand with no perceptible end play (lash).

12. If replacement is required, refer to Adjusting Screw and Retainer in the Disassembly and Assembly portion of this section. If no damage was noted, proceed to Step 13.

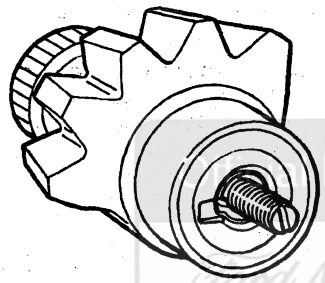

G8408-A

13. Remove relief valve cap (if so equipped), O-ring and two-piece relief valve from valve housing. Discard O-ring.

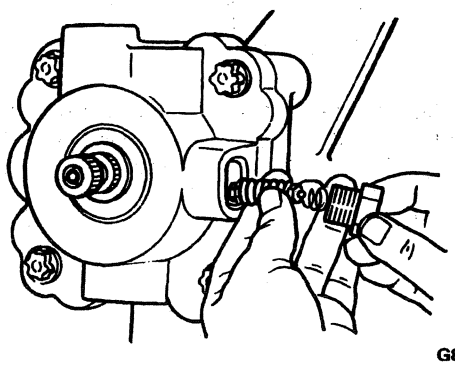

G8409-A

14. Remove and discard dirt and water seal from power steering gear input shaft.

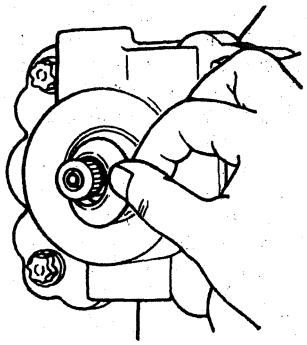

G8410-A

15. Clean any paint or corrosion from exposed area of power steering gear input shaft.

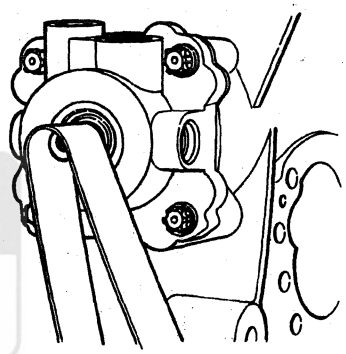

G8411-A

16. Remove the four Torx® head valve housing bolts.

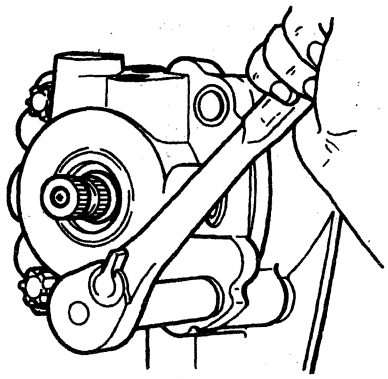

G8412-A

Licensed Product Ford Motor Company

DISASSEMBLY AND ASSEMBLY (Continued)

17. **CAUTION: The set position of poppet seat and sleeve assemblies must not be disturbed if the poppets are not going to be replaced or pushed in during assembly. If the automatically set poppets are not to be removed for replacement or are to be reset for automatic repositioning after the next installation, take care not to disturb the set position of the poppet adjuster seat and sleeve assembly. Identify the steering gear as to which vehicle it is removed from, and make sure the poppet adjuster seat and sleeve assemblies are set for only that particular vehicle.**

    NOTE: Be prepared for more fluid drainage.

    Remove the rack piston subassembly. Place the assembly on a clean cloth. It helps to rotate the power steering gear input shaft to move the rack piston toward the lower end of the steering gear housing. This forces the valve housing to exit the steering gear housing.

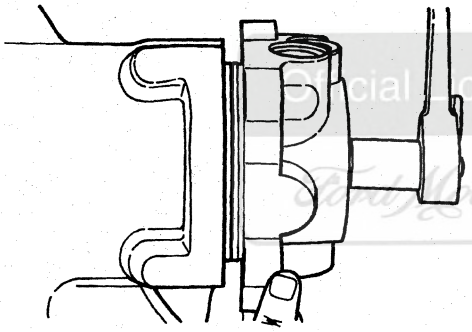

G8413-A

18. NOTE: If the Teflon® rack piston seal is on the end of the rack piston away from the rack piston bore opening, cut the seal. Remove the seal ring from the rack piston when it is exposed in the sector shaft cavity of the housing during the removal of the power steering gear input shaft and steering gear input worm gear and rack. This prevents the seal from "hanging up" as it exits the housing sector shaft cavity.

    Remove and discard the seal rings from the valve housing.

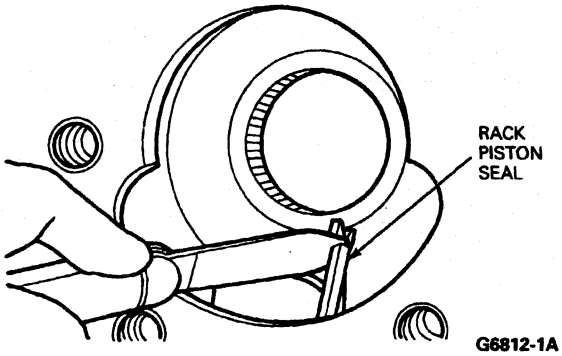

G6812-1A

19. If the clip-type ball return guide is used, bend down the tabs against the hex-head bolts. Remove the bolts and the clip. Discard the clip.

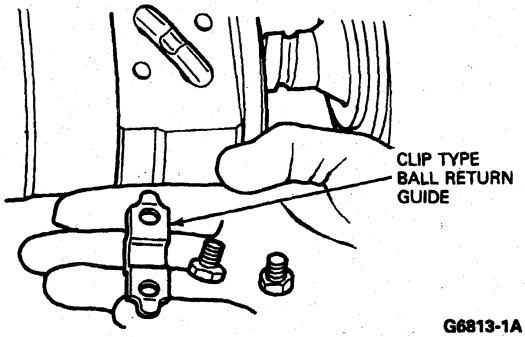

G6813-1A

20. NOTE: Left ball return guide halves are copper-plated for identification and right guides are not plated.

    If a cap-type return guide is used, remove and discard the two special sealing screws that fasten the cap to the piston. Remove the cap and cap seal. Discard the seal.

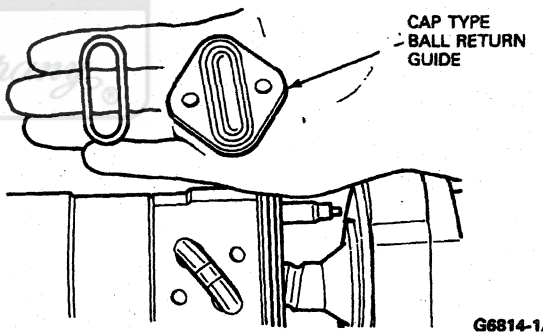

G6814-1A

21. Make sure the rack piston is on a cloth so the steel balls that fall out will not roll very far. Remove ball return guide halves by carefully inserting a screwdriver between the rack piston and guides.

Special Licensed Product
Ford Motor Company

DISASSEMBLY AND ASSEMBLY (Continued)

22. **CAUTION: The steel balls are a matched set. If any are lost, the complete set must be replaced by service balls. The TAS40 has 29 factory balls installed.**

    Remove the steel balls from the rack piston by rotating the power steering gear input shaft, steering gear input worm gear and rack until the balls fall out. Place the balls and return guides in a cup or other container, and make sure all the balls have been removed.

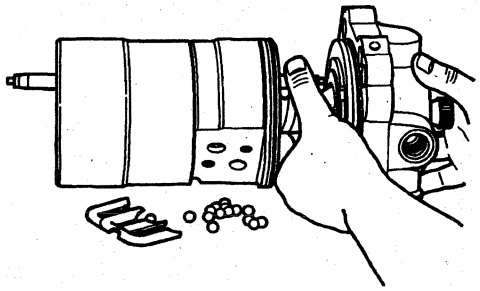

G8414-A

23. Remove the power steering gear input shaft, valve worm and valve housing subassembly from the rack piston.

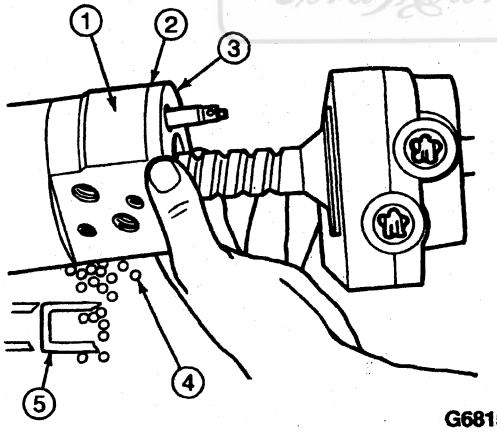

G6815-B

Item	Part Number	Description
1	3K748	Rack Piston
2	3B541	O-Ring
3	—	Seal Ring (Part of 3K748)
4	—	Balls (Part of 3E501)
5	3523	Return Guide

24. Cut and remove the Teflon® seal ring and the O-ring from the rack piston if not removed during Step 17.

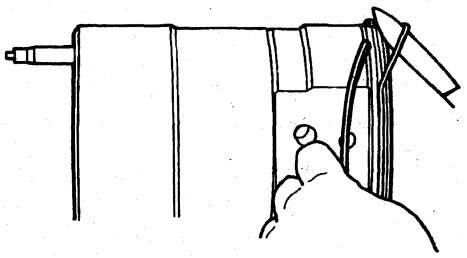

G8415-A

25. NOTE: The poppet adjuster seat and sleeve assemblies should not be removed unless replacement of poppet components is required.

    Inspect poppet stems and seat and sleeve assemblies for damage. Push poppet stems; they should spring back. Push poppet seat; it should not move by hand. If components are bent or broken, or if poppet stems don't spring back or poppet seat moves by hand, refer to Poppet Component Replacement in the Disassembly and Assembly portion of this section. If not, proceed to next step.

26. Inspect valve housing / worm screw subassembly for heat damage or bearing roughness. If these conditions are present, or if there is excessive internal leakage, or if preload adjustment is required, go to Valve Housing / Steering Gear Input Worm Gear and Rack in the Disassembly and Assembly portion of this section. If not, proceed to Step 27.

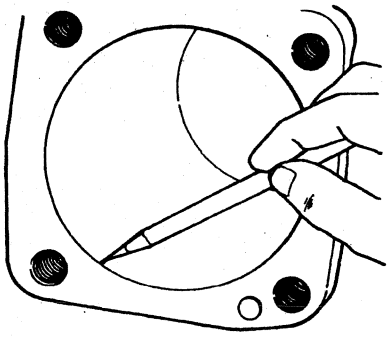

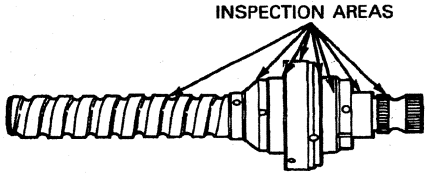

G8416-A

Official Licensed Product
Ford Motor Company

DISASSEMBLY AND ASSEMBLY (Continued)

27. Remove the retaining ring that is closest to the output end of the housing trunnion.

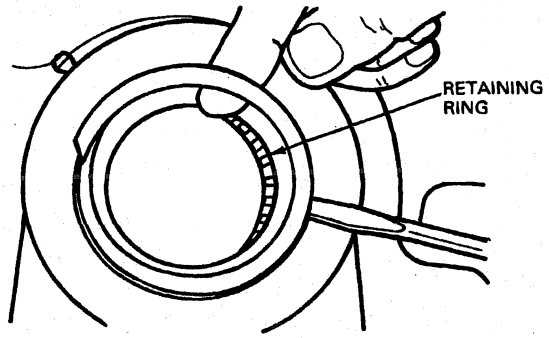

28. Remove and discard the dirt seal from the housing trunnion.

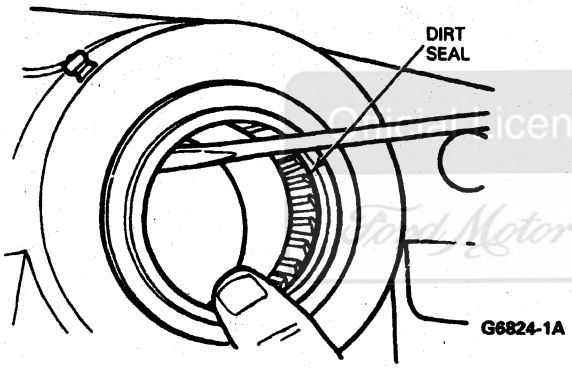

29. Insert a screwdriver from the trunnion end of the housing and carefully push the seal and the spacer washer out of the other end of the housing without damaging the sealing area or the spacer washer. Discard the seal.

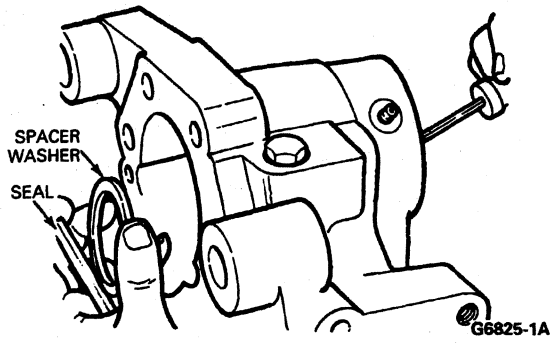

30. Inspect roller bearing in the housing for brinelling or spalling. Inspect retaining ring for damage. If replacement of either part is required, go to Housing Roller Bearing or Retaining Ring Replacement in the Disassembly and Assembly portion of this section. If not, proceed to Step 31.

31. Inspect the following for damage:
    - poppet fixed stop screw and washer
    - poppet adjusting screw and sealing nut
    - pressed-in grease fitting
    - auto-bleed plug
    - auxiliary port plugs and O-rings

    If any are damaged, refer to Housing Ports, Plugs, Screws and Fittings in the Disassembly and Assembly portion of this section. If not, proceed to the Cleaning and Inspection portion of this section.

Assembly

NOTE: Bolt torques are given for both dry threads and lubricated threads. Lubricate the threads with oil and use the lubricated torque values. Refer to Specifications at the end of this section.

1. NOTE: Replace all of the seals with steering gear input shaft seal kits (3E502) every time the gear is disassembled.

   Install a new dirt seal into the trunnion end of the sector shaft bore of the housing. Make sure the seal is installed against the bearing and the lip of the seal faces outward.

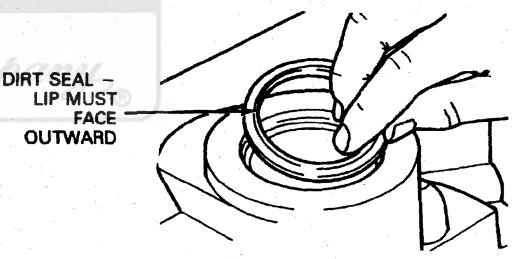

2. Install the second retaining ring. Make sure the ring is firmly seated in the groove in the housing.

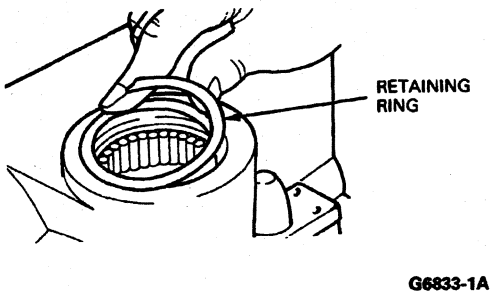

Ford Motor Company Licensed Product

DISASSEMBLY AND ASSEMBLY (Continued)

3. NOTE: A dab of grease applied to the small diameter of the washer will hold it in place during installation of the seal.

   Install washer into the side cover side of housing seal bore with small diameter piloted into retaining ring.

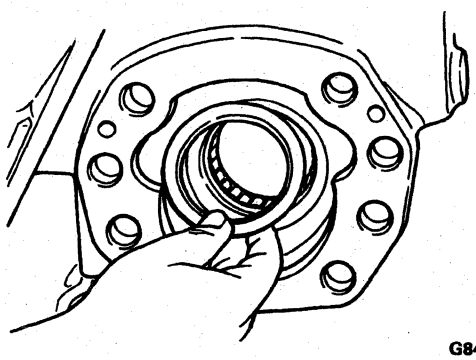

G8418-A

4. Assemble new seal onto Bearing and Seal Tool J37705 so the lip with the garter spring is toward the shoulder of the tool.
5. Working from the side cover side of the housing, pilot the seal tool into the washer and bearing and press with a force of 445-3,560 N (100-800 lb) until the seal is seated against washer.

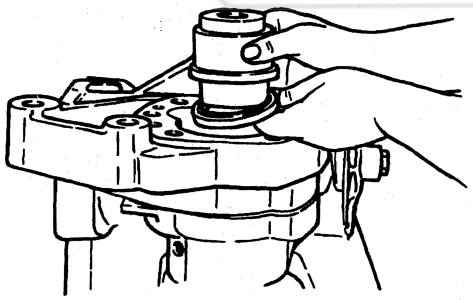

G8419-A

6. Liberally pack the area between dirt seal and pressure seal including roller bearing with High Temperature Front Axle and Wheel Bearing Grease E8TZ-19590-A or equivalent meeting Ford specification ESA-M1C198-A.

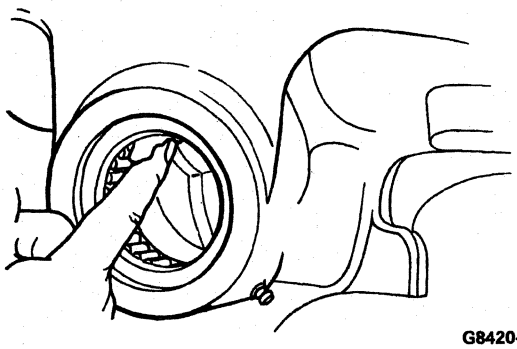

G8420-A

7. Lightly oil new seal ring, and assemble in valve housing mounting face groove.

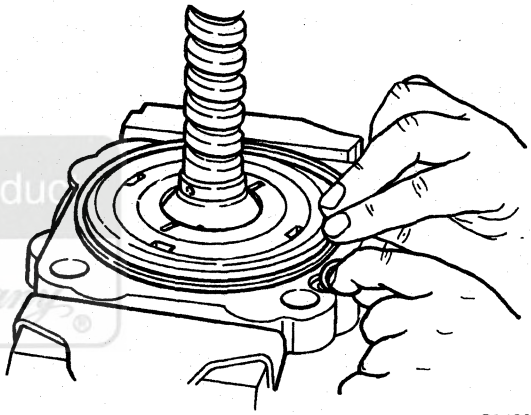

G8421-A

8. Install a new backup O-ring and then a new Teflon® seal ring on rack piston. Do not over-stretch these rings as you install them. Do not allow the Teflon® seal ring to be twisted.

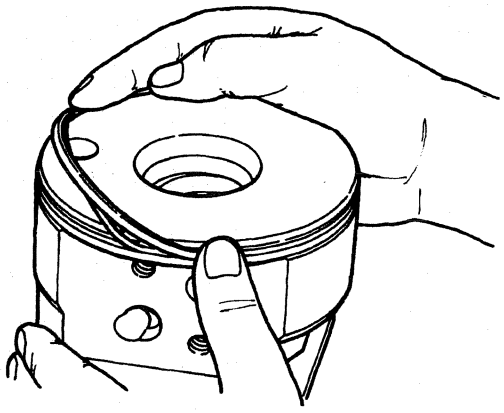

G8422-A

Ford Motor Company

DISASSEMBLY AND ASSEMBLY (Continued)

9. Apply clean oil to housing cylinder bore. Place the rack piston in the housing piston bore with ball return guide holes up.

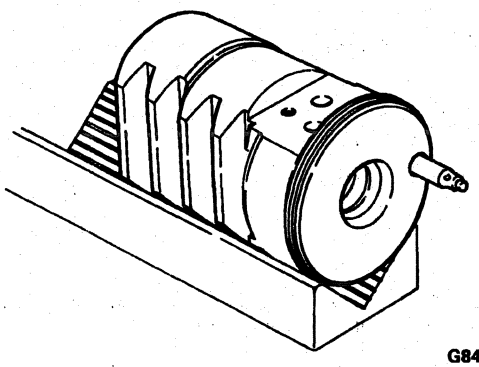

G8423-A

10. Insert the steering gear input worm gear and rack into the rack piston close to maximum depth, without the valve housing making contact with the poppet stem. Insert two 7 / 16-14 Ready Bolts through valve housing bolt holes and tighten into housing to support the worm screw. Line up rack piston ball guide holes with the worm ball track grooves by rotating the power steering gear input shaft.

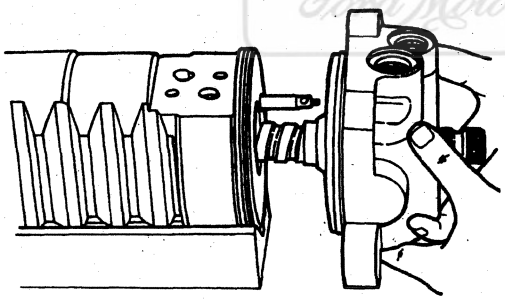

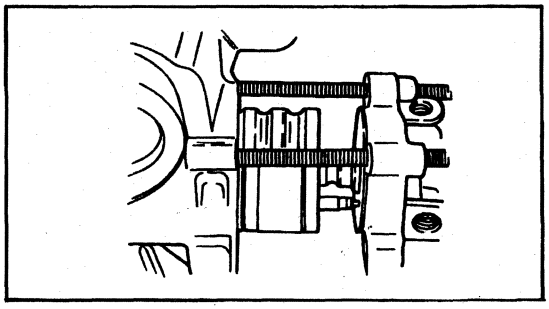

G8424-B

11. **WARNING: DO NOT SEAT GUIDES WITH A HAMMER. DAMAGE TO GUIDES CAN RESULT IN SUBSEQUENT LOCKUP OR LOSS OF STEERING.**

CAUTION: If a new rack piston or a new power steering gear input shaft, valve, worm subassembly is being assembled, the balls removed from the unit must be discarded and a service ball kit used. The balls in a service ball kit are sized to function in the ball track guide path as altered by component replacement.

CAUTION: When using the service ball kit, use the correct quantity of service balls (29).

Compare the new guides with the guides removed from the steering gear; use the ones that look the same. Left guides are copper plated, right guides are unplated. Assemble the new ball return guide halves into the rack piston until seated. Rotate power steering gear input shaft slightly if necessary.

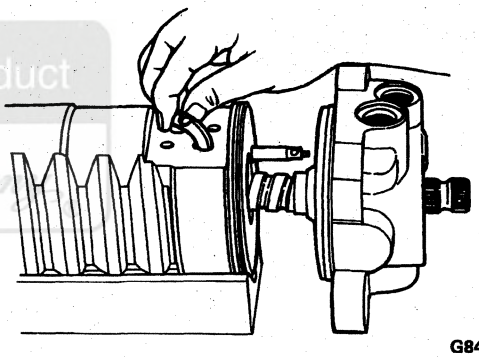

G8425-A

Ford Motor Company

DISASSEMBLY AND ASSEMBLY (Continued)

12. **WARNING: HOLD THE BALL RETURN GUIDES UNTIL THE CAP OR CLIP IS REINSTALLED. FAILURE TO HOLD THE GUIDES WILL RESULT IN A TRAPPED BALL OR BALLS, WHICH COULD CAUSE A VEHICLE ACCIDENT. IF THE BALL GUIDES BECOME UNSEATED AT ANY TIME, REMOVE ALL THE BALLS AND REPEAT THE PROCEDURE STARTING AT STEP 12.**

    WARNING: THE CORRECT NUMBER OF BALLS IS REQUIRED FOR PROPER GEAR OPERATION. COUNT THE BALLS AND INSERT EACH CAREFULLY.

    CAUTION: Do not allow the valve housing to contact the poppet adjuster or move more than 69.1 mm (2-3/4 inches) from upper end of the rack piston during these procedures. This could incorrectly preset the poppet adjuster.

    Hold the ball return guides firmly in place during this entire procedure. Insert as many of the steel balls as you can through the hole in the top of the ball return guides. Rotate the power steering gear input shaft to pull the balls down and around the ball track guide path. Continue until the correct number of balls is in the ball track guide path.

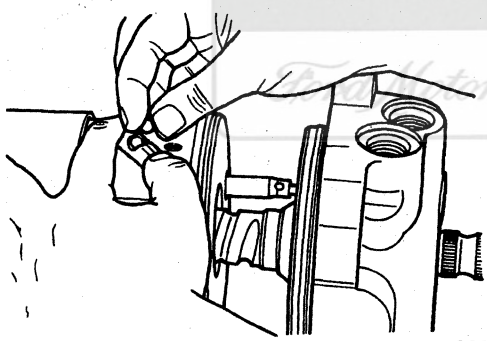

G8426-A

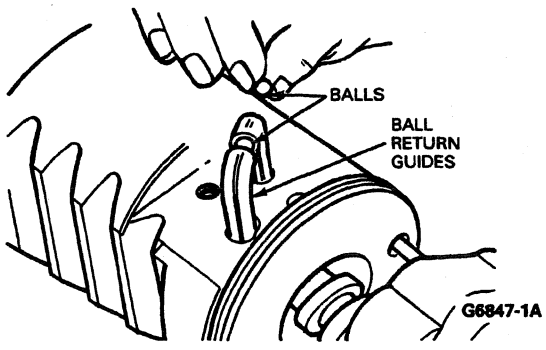

G6847-1A

13. If a ball return guide clip is used, install a new guide clip. Line up the holes in the clip and on the piston. Make sure the clip is in complete contact with the piston. Install the bolts and tighten to 19-30 N·m (14-22 lb-ft). Bend the tabs of the clip against the bolt heads.

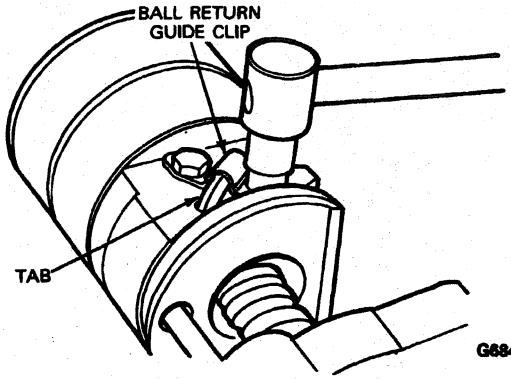

G6848-1A

14. **WARNING: TO MAKE SURE THE BALLS ARE PROPERLY INSTALLED, ROTATE THE STEERING GEAR INPUT WORM GEAR AND RACK FROM ONE END OF TRAVEL TO THE OTHER WITHOUT ALLOWING THE POPPET ADJUSTER TO CONTACT THE VALVE HOUSING OR MOVING THE VALVE HOUSING PILOT FACE MORE THAN 69.1 MM (2-3/4 INCHES) FROM THE INPUT END OF THE RACK PISTON. IF THE STEERING GEAR INPUT WORM GEAR AND RACK CANNOT BE ROTATED, REINSTALL THE BALLS. IF A STEERING GEAR IS INSTALLED WITH A STEERING GEAR INPUT WORM GEAR AND RACK THAT CANNOT ROTATE, THE STEERING GEAR WILL NOT FUNCTION CORRECTLY AND STEERING AND GEAR FAILURE COULD RESULT.**

    If the steering gear is equipped with a ball return guide cap, lubricate a new seal and install the seal in the groove in the cap. Install the cap so the seal makes full contact with the surface of the piston. Install two new capscrews and tighten alternately to 19-30 N·m (14-22 lb-ft).

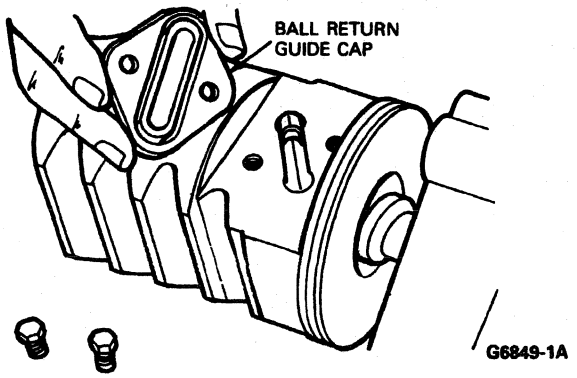

G6849-1A

Official Licensed Product
Ford Motor Company

DISASSEMBLY AND ASSEMBLY (Continued)

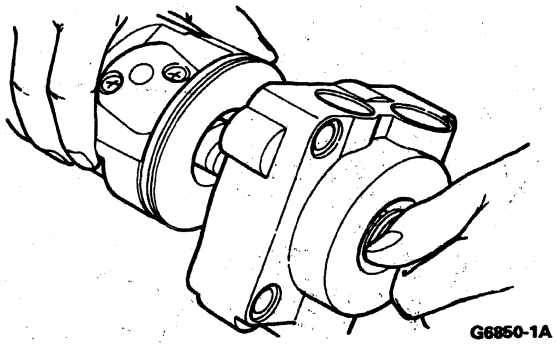

G6850-1A

15. **CAUTION: Do not damage the seal ring while installing the rack piston into housing. If the seal ring end of rack piston enters the housing first, the seal ring will be destroyed when the rack is removed.**

    CAUTION: The poppet seat and sleeve assemblies must not bottom against the internal poppet stops in the steering gear until the steering gear is installed on the vehicle and the poppet adjustment procedures are performed.

    Apply clean oil to Teflon® seal ring on rack piston. Make sure there is a space of 10-13 mm (3/8-1/2 inch) between valve housing and poppet stem to prevent poppet contact at either end. Remove the Ready Bolts and push the rack piston assembly into the housing, with the rack piston teeth toward the sector shaft cavity. Line up the valve housing cylinder feed hole with the gear housing feed hole.

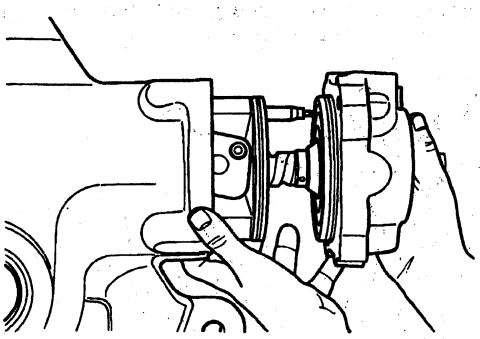

G8427-A

16. Install the four valve housing bolts into the steering gear housing. Tighten the TAS40 bolts alternately to 149 N·m (110 lb-ft) if dry, or 109 N·m (80 lb-ft) if lubricated.

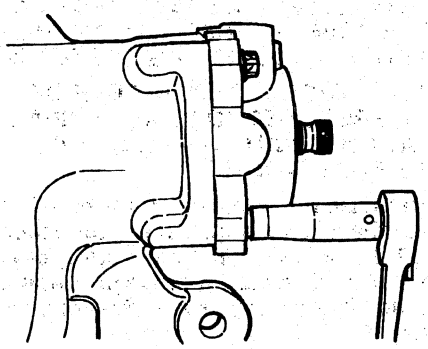

G8428-A

17. If the steering gear is equipped with a relief valve, assemble a new O-ring on relief valve cap. Assemble the small end of tapered spring onto the pin on the other part of the relief valve and insert the assembly (large end of tapered spring end first) into the relief valve cap cavity. Turn the relief valve cap as assembled into the valve housing and tighten to 41 N·m (30 lb-ft).

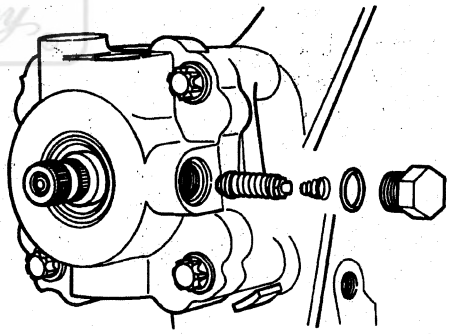

G8429-A

Official Licensed Product Company

DISASSEMBLY AND ASSEMBLY (Continued)

18. **CAUTION: This bearing is sealed and will receive no lubrication from the hydraulic fluid in the steering gear. Failure to use the proper grease could result in premature bearing wear.**

    Lightly oil DU bushing. Do not grease.

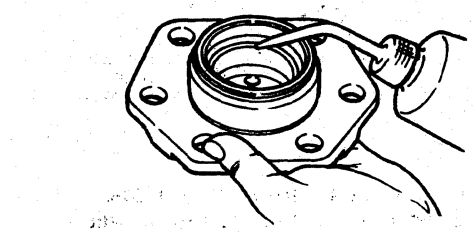

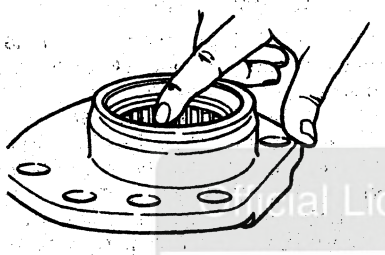

G8430-A

19. Grease and assemble new seal onto Bearing and Seal Installation Tool J37705, so the side with the garter spring is against the shoulder of the installation tool. Pilot the tool into the steering gear housing end cover with a force of 445-3,560 N (100-800 lb) until it is seated against the bearing or bushing.

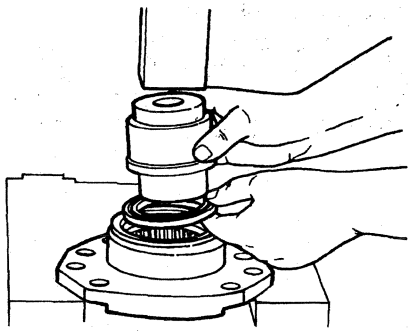

G8431-A

20. Lightly oil short bearing area of steering gear sector shaft. Do not grease.
21. Insert the steering gear sector shaft into the side cover subassembly, and screw the sector shaft adjusting screw counterclockwise into the steering gear housing end cover until the screw reaches solid height.
22. Rotate the adjusting screw clockwise one half turn so the steering gear housing end cover will rotate freely on the steering gear sector shaft.

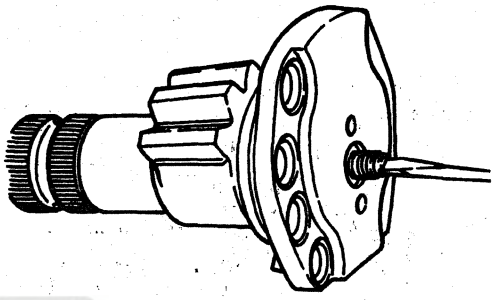

G8432-A

23. Install the sector shaft adjusting screw jam nut onto the sector shaft adjusting screw a few threads. Final adjustment will be made later.

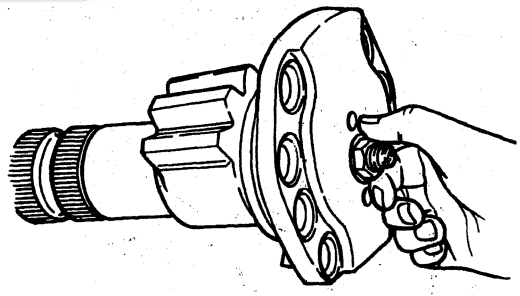

G8433-A

Official Licensed Product Ford Motor Company

DISASSEMBLY AND ASSEMBLY (Continued)

24. **WARNING: DO NOT WELD OR OTHERWISE PLUG THIS HOLE IN ANY PERMANENT MANNER. THIS IS A SAFETY VENT THAT FUNCTIONS ONLY IF THE SIDE COVER SEAL FAILS. IF THE SEAL FAILS AND THE PLUG CANNOT VENT, THE STEERING GEAR CAN LOCK UP OR OTHERWISE MALFUNCTION.**

Press the new vent plug into the hole provided in the steering gear housing end cover until the plug is bottomed.

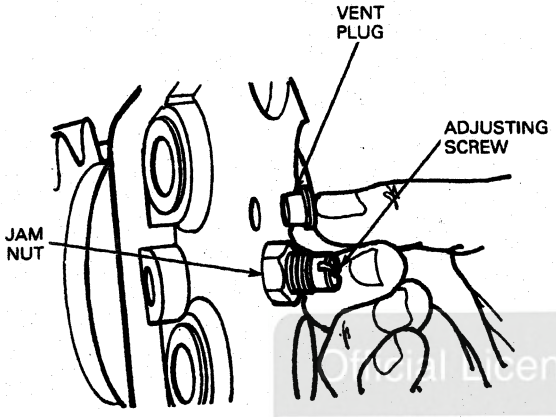

G6854-1A

25. Apply clean grease to the new side cover gasket to hold it in place. Put the gasket on the steering gear housing end cover.

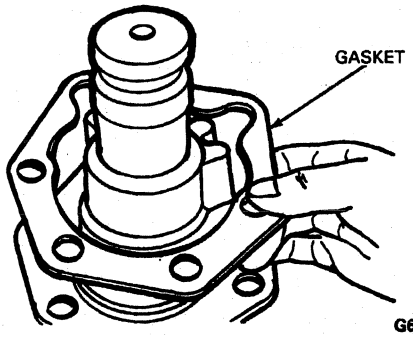

G6855-1A

26. **WARNING: IF THE RACK PISTON IS NOT CENTERED WHEN THE POWER STEERING GEAR INPUT SHAFT IS INSTALLED, THE GEAR TRAVEL WILL BE SEVERELY LIMITED IN ONE DIRECTION. THIS COULD RESULT IN AN ACCIDENT.**

Rotate the power steering gear input shaft to position the rack piston so that the tooth space between the second and third tooth is in the center of the sector shaft opening. This will center the rack piston for the installation of the steering gear sector shaft.

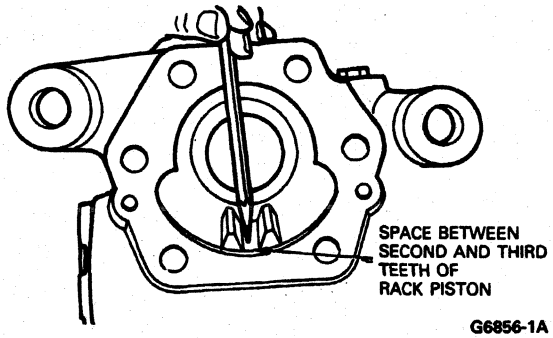

G6856-1A

27. **CAUTION: If the sector shaft serrations are not properly taped, the serrations will damage the housing seal during assembly, causing the seal to leak.**

Clean off any old tape on the serrations of the steering gear sector shaft. Retape the serrations and the bolt groove with one layer of masking tape. Install the steering gear sector shaft and side cover assembly into the steering gear housing. Make sure the center tooth of the steering gear sector shaft engages the center space (between the second and third teeth) of the rack piston. Be sure the side cover gasket is properly in place.

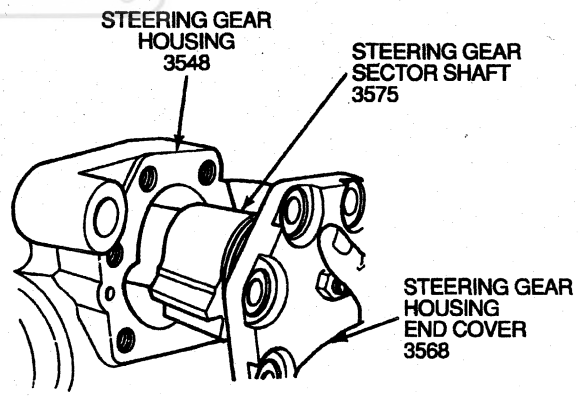

G9036-A

Ford Motor Company

DISASSEMBLY AND ASSEMBLY (Continued)

28. Install the special side cover bolts into the steering gear housing end cover and tighten them in the sequence shown. If bolts must be replaced, use bolts of the same design, type and length as those removed. Do not use a substitute.

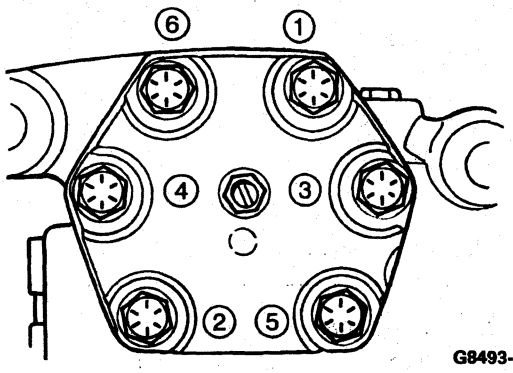

G8493-A

29. Tighten side cover bolts to 217 N·m (160 lb-ft) if dry or 160 N·m (118 lb-ft) if lubricated.
30. Remove tape from steering gear sector shaft and pack the end of housing trunnion area at the steering gear sector shaft with Mobile Temp 1 or 2, High Temperature Front Axle and Wheel Bearing Grease E8TZ-19590-A or equivalent meeting Ford specification ESA-M1C198-A. Apply more of the grease to new trunnion dirt seal and assemble it over the steering gear sector shaft and into the trunnion bore.

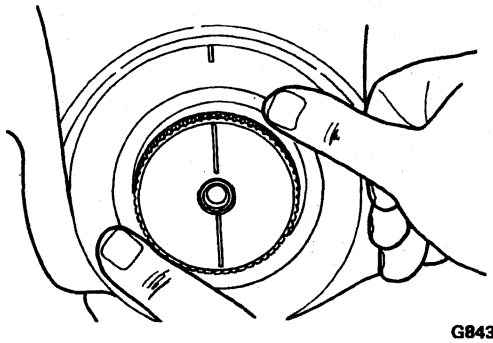
G8435-A

31. Pack the end of the valve housing bore around the power steering gear input shaft with Mobil Temp 1 or 2, High Temperature Front Axle and Wheel Bearing Grease E8TZ-19590-A or equivalent meeting Ford specification ESA-M1C198-A. Apply more of the grease to the inside of a new dirt and water seal and install it over the power steering gear input shaft and seat it in the groove behind the serrations and against the valve housing.

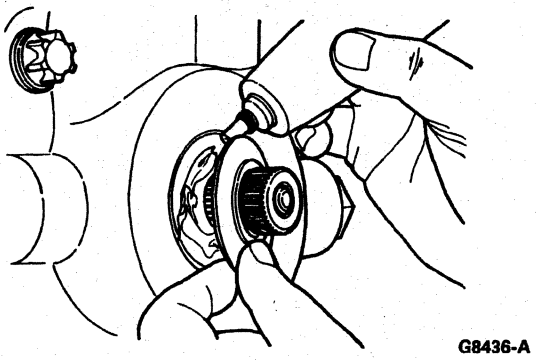
G8436-A

32. Adjust the steering gear. Refer to Final Adjustment in the Disassembly and Assembly portion of this section.

Adjusting Screw and Retainer

1. NOTE: A service steering gear sector shaft (3575) will come assembled with the adjusting screw and retainer.

   Inspect the steering gear sector shaft bearing and sealing areas and sector teeth contact surfaces for brinelling, spalling or cracks. Run your fingernail edge across these areas to detect steps. Remove masking tape from the steering gear sector shaft and inspect for twisted or otherwise damaged serrations. If any of these conditions exist, replace the steering gear sector shaft.

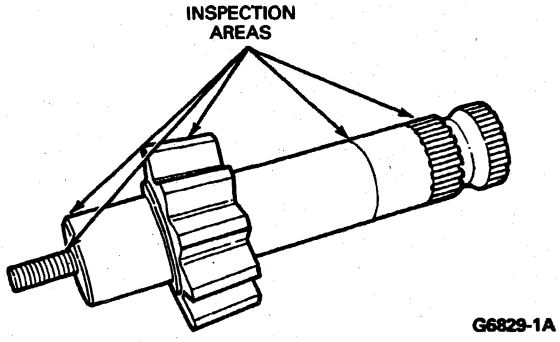

G6829-1A

2. If damage was not found in Step 1, place the steering gear sector shaft firmly in a soft-jawed vise and unstake the retainer. Turn the retainer out of the sector shaft pocket.

DISASSEMBLY AND ASSEMBLY (Continued)

3. If necessary, remove the steering gear sector shaft adjusting screw (3577). If steering gear sector shaft adjusting screw is replaced, retainer must also be replaced.

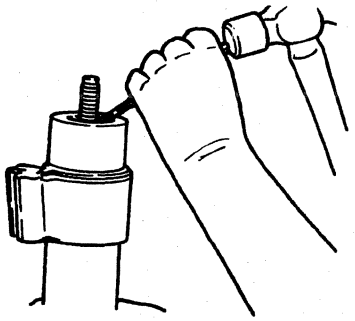

G8440-A

4. If the steering gear sector shaft adjusting screw has been removed, coat the expanded end of the new steering gear sector shaft adjusting screw with a suitable grade of wheel bearing grease and insert into recess in end of steering gear sector shaft.

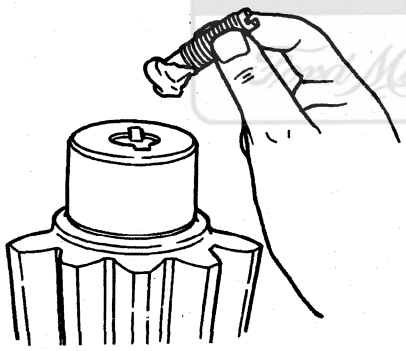

G8441-A

5. **WARNING: STAKE THE RETAINER SECURELY INTO THE SECTOR SHAFT SLOTS. IF THE RETAINER IS BROKEN OR CRACKED DURING THE STAKING, REPLACE IT. FAILURE TO DO SO COULD RESULT IN THE LOSS OF MANUAL AND POWER STEERING CONTROL.**

   Thread a new sector shaft screw retainer into the steering gear sector shaft. Tighten and then stake the retainer in the two slots provided. The steering gear sector shaft adjusting screw should rotate freely by hand, with very little end play, no more than 0.05 mm (0.002 inch).

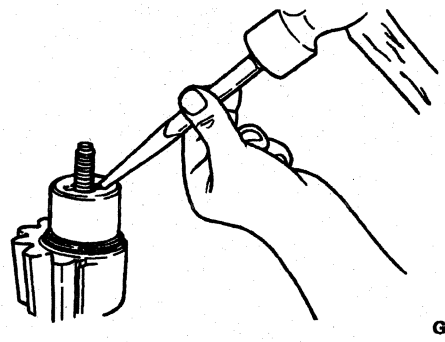

G8442-A

Poppet Component Replacement

1. If the poppet assemblies are to be removed for replacement or internally reset for fully automatic poppet adjustment after reinstallation, place rack piston in a soft-jawed vise.
2. **CAUTION: Poppet adjuster seat and sleeve assemblies are retained by Loctite® applied to the threads, which makes the assemblies difficult to remove.**

   Slide Poppet Disassembly Tool J36452-B over the seat of poppet adjuster seat and sleeve assembly, and engage tool in the slots in the threaded sleeve. Hit the end of the tool firmly four or five times with a 2-lb. hammer to loosen Loctite®.

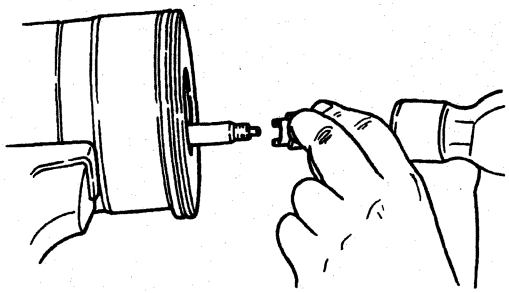

G8443-A

Official Licensed Product Ford Motor Company

DISASSEMBLY AND ASSEMBLY (Continued)

3. With a breaker bar applied to the tool, turn one adjuster seat and sleeve assembly out of the rack piston. If the breaker bar does not turn easily, strike the adjuster removal tool again with a hammer.

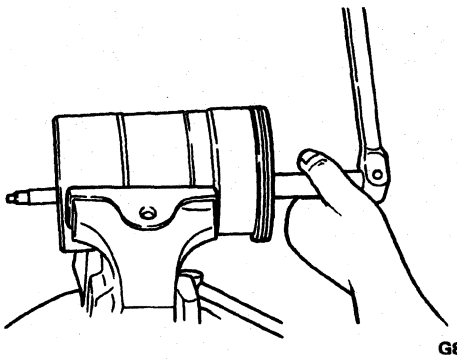

G8444-A

4. Remove the two poppets, spring, spacer rod and push tube.

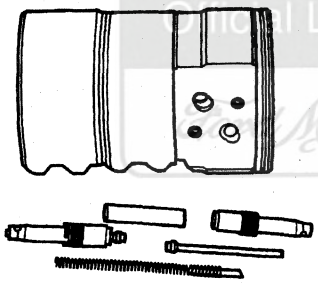

G8445-A

5. NOTE: It is possible to reset one poppet adjuster seat and sleeve assembly for automatic poppet adjustment while it is in the rack piston if one adjuster seat and sleeve assembly and the poppets, spring, spacer rod and push tube are removed.

   Remove remaining poppet seat and sleeve assembly as required.

6. Clean threads on poppet seat and sleeve assemblies. Use a 7/16-20 UNF thread chaser.

7. Screw poppet seat and sleeve assembly loosely into its threaded hole in the rack piston for full thread length with slotted end in.

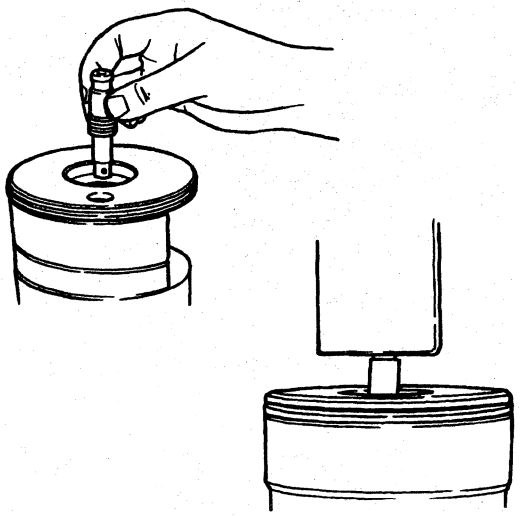

G8446-A

8. NOTE: If one poppet seat and sleeve assembly was left in rack piston, it can be reset for automatic poppet adjustment by inserting a 9.52-mm (3/8-inch) diameter x 152.4-mm (6-inch) drill rod down through the poppet seat hole at the opposite end of the rack piston and against the adjuster seat. Press the seat in until it bottoms against the adjuster sleeve.

   Press the adjuster seat into the sleeve using 2,224-11,120 N (500-2,500 lb) force until the shoulder on the seat bottoms against the sleeve. Remove the adjuster seat and sleeve assembly from the rack piston, and repeat procedure for the other poppet seat and sleeve assembly if removed.

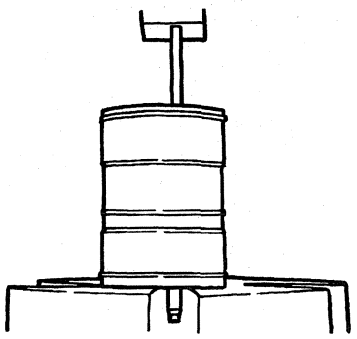

G8447-A

Official Licensed Product Ford Motor Company

DISASSEMBLY AND ASSEMBLY (Continued)

9. **WARNING: WEAR EYE PROTECTION WHILE ASSEMBLING POPPETS, AS SPRING LOADED POPPETS COULD EJECT AND CAUSE EYE INJURY.**

   CAUTION: Do not allow Loctite® or Locquic® to get on the adjuster seat component of the adjuster seat and sleeve assembly. The poppets will not function properly.

   Carefully apply Locquic® T primer to the threads in poppet holes and threads on the seat and sleeve assemblies. Allow to dry for 10 minutes. Then carefully apply Loctite® RC680 to the same threads.

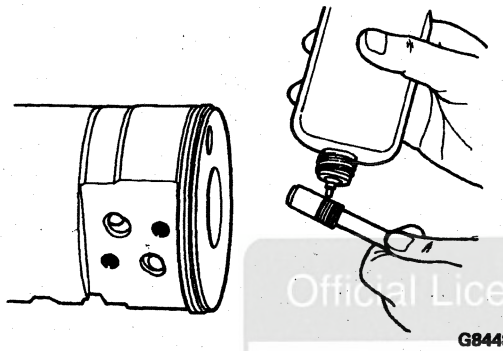

G8448-A

10. Place rack piston in a soft-jawed vise and turn one poppet adjuster seat and sleeve assembly (slotted end out) into the poppet hole in one end of rack piston, if both seat and sleeve assemblies were removed.
11. From other end of the poppet hole in the rack piston, install the following:
    - one poppet
    - poppet spring
    - nylon spacer rod
    - push tube
    - other poppet
    - other poppet adjuster seat and sleeve assembly

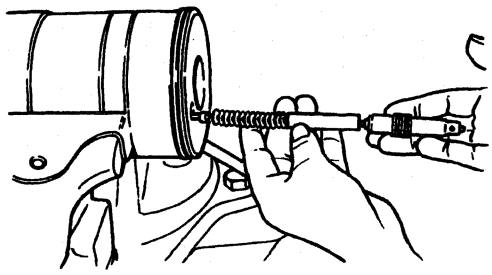

G8449-A

12. Tighten both poppet adjuster seat and sleeve assemblies using Poppet Adjusting Seat Tool J36452-A and a torque wrench to 14 N·m (11 lb-ft).

Valve Housing/Steering Gear Input Worm Gear and Rack

1. With steering gear input worm gear and rack (3524) vertical, place the valve housing, power steering gear input shaft, valve, steering gear input worm gear and rack in a vise.

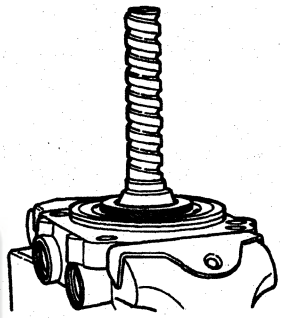

G8450-A

2. Unstake the valve housing where it was upset into the adjuster lock nut slot. Also unstake adjuster nut from adjuster.

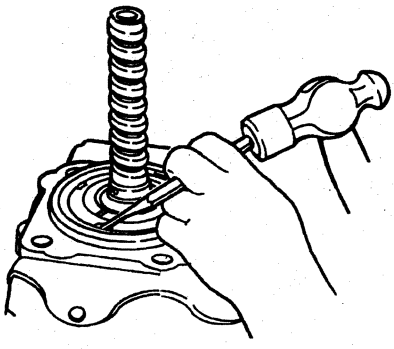

G8451-A

Official Licensed Product

DISASSEMBLY AND ASSEMBLY (Continued)

3. Using Adjuster Locknut Tool J37464, turn bearing adjuster lock nut out of the valve housing.

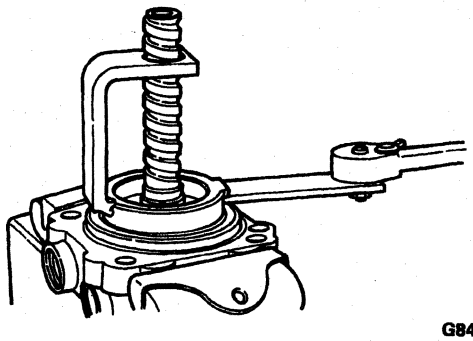

G8452-A

4. Using Adjuster Tool J37070, turn bearing adjuster out of the valve housing.

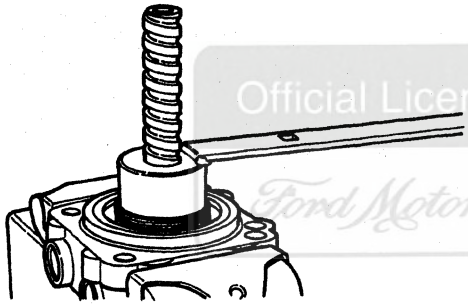

G8453-A

5. Remove and discard seal ring and O-ring from bearing adjuster.

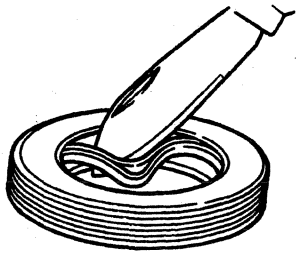

G8454-A

6. Remove the power steering gear input shaft, valve, steering gear input worm gear and rack from the valve housing.

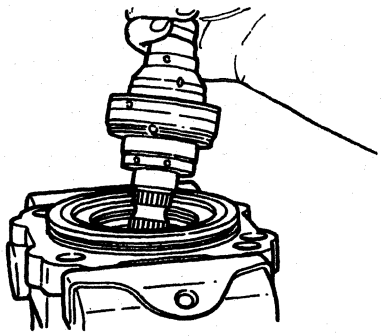

G8455-A

7. Remove thin thrust washer and thrust bearing from power steering gear input shaft.

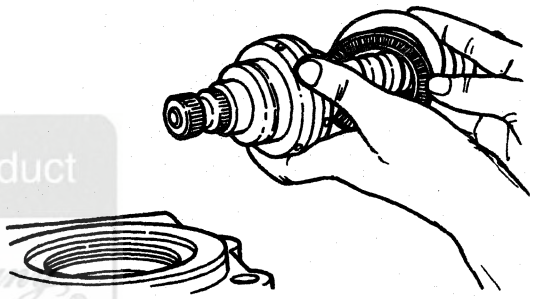

G8456-A

8. Remove thick thrust washer and thrust bearing from valve housing.

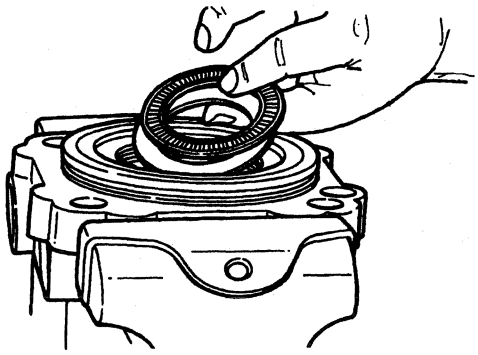

G8457-A

Official Licensed Product
Ford Motor Company

DISASSEMBLY AND ASSEMBLY (Continued)

9. **CAUTION: Exércise special care when removing seal to prevent damaging the valve housing seal bore.**

   Remove and discard seal rings and O-rings from valve housing.

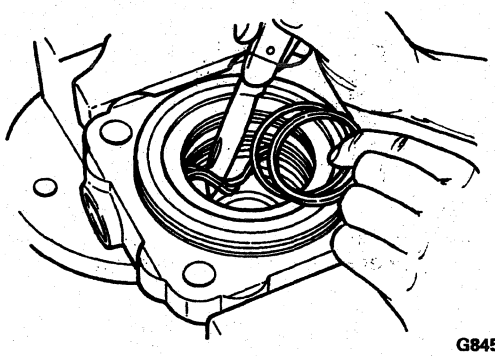

G8459-A

10. Turn over valve housing and remove retaining ring.

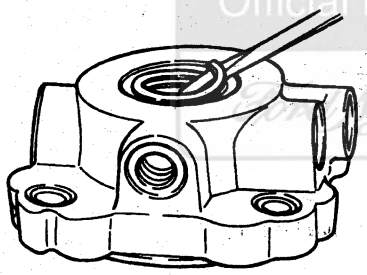

G8460-A

11. NOTE: The valve housing also use a ball plug for manufacturing purposes that must not be removed.

    Tap input shaft seal out of valve housing. Discard seal.

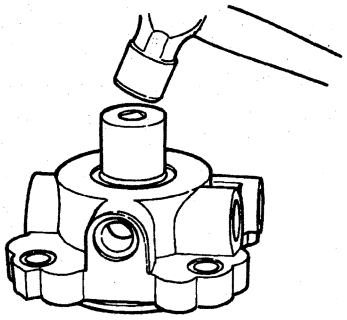

G8461-A

12. **CAUTION: Power steering gear input shaft, valve, steering gear input worm gear and rack must not be disassembled further. The components were a select fit at assembly and are available only as part of this subassembly. If disassembled further, the subassembly must be replaced.**

    Inspect the sealing areas of power steering gear input shaft and valve for nicks and run your fingernail edge across the sealing surfaces to detect steps. Inspect for discoloration from excess heat. Inspect input shaft ball-track grooves for brinelling or spalling. If any of these conditions exist, you must replace the power steering gear input shaft, valve, steering gear input worm gear and rack, valve housing and balls. Also replace rack piston if brinelling or spalling is found.

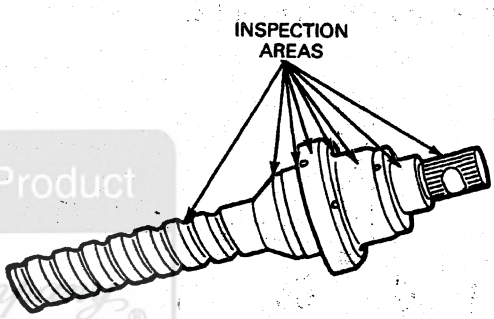

G6828-1A

13. Inspect the thrust bearing rollers for any deterioration. Inspect thrust washers for brinelling, spalling or cracks. Replace any part with these conditions.

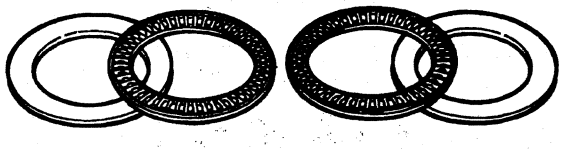

G8462-A

Official Licensed Product

DISASSEMBLY AND ASSEMBLY (Continued)

14. **CAUTION: Do not clamp against threaded port hole or relief valve hole sealing faces when placing valve housing in vise.**

    Place valve housing firmly in a vise so the power steering gear input shaft, valve, steering gear input worm gear and rack can be assembled vertically with worm end up.

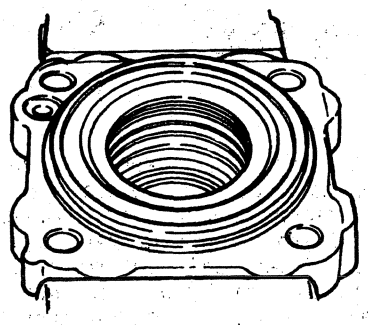

G8463-A

15. Oil and assemble a new O-ring into its counterbore in valve housing.

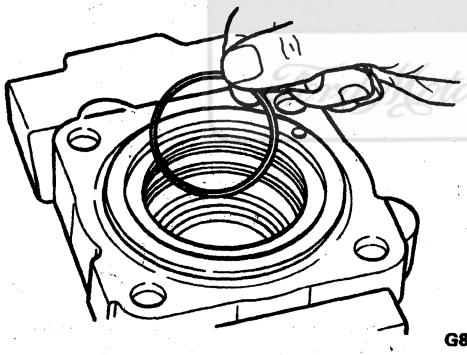

G8464-A

16. Lightly oil and assemble new O-ring and new seal ring into the large diameter seal ring groove in valve housing bending and working them in and smoothing them out as necessary.

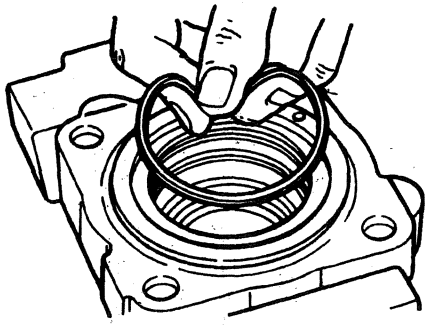

G8465-A

17. **CAUTION: If you are replacing the input shaft, valve and worm subassembly, discard spacer sleeve and thin washer.**

    Install roller thrust bearing and then the thick washer onto power steering gear input shaft, valve and worm subassembly, seating against the input shaft thrust face.

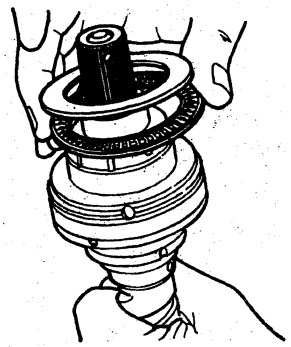

G8466-A

18. Lightly oil and assemble new seal ring onto power steering gear input shaft and against the thick thrust washer to hold the bearing components in place.

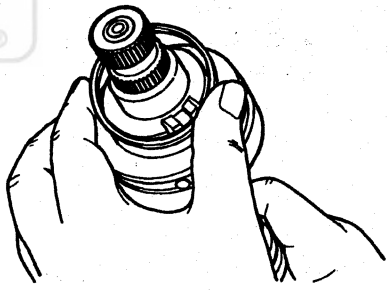

G8468-A

19. Dip the input end of the power steering gear input shaft, valve, steering gear input worm gear and rack into oil up to the worm lead. Assemble the input shaft end of the assembly into the valve housing until it is firmly seated.

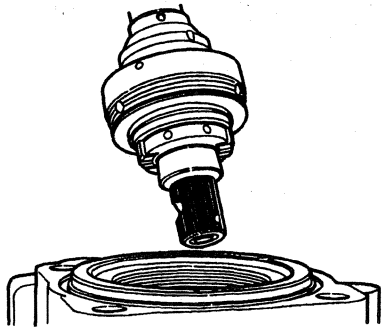

G8469-A

Official Licensed Product Ford Motor Company

DISASSEMBLY AND ASSEMBLY (Continued)

20. Apply oil and assemble the other thrust bearing then the thin thrust washer over the ball groove end of worm, and seat them against the shoulder of power steering gear input shaft, valve, steering gear input worm gear and rack.

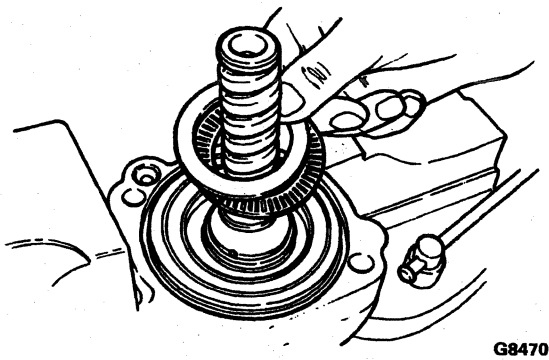

G8470-A

21. Lightly oil a new O-ring and assemble into the seal groove in bearing adjuster. Oil and work a new seal ring into the same groove and smooth it out.

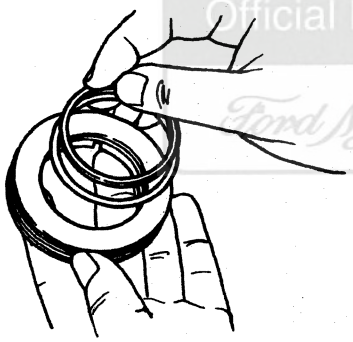

G8471-A

22. NOTE: Be sure the valve housing, adjuster lock nut and bearing adjuster threads are clean and free of any staking burrs that would impede the lock nut from turning freely on adjuster or the adjuster turning freely in valve housing.

    Lightly oil and assemble bearing adjuster over steering gear input worm gear and rack and into valve housing. Tighten adjuster to 18 N·m (13 lb-ft) indicated torque using a torque wrench inserted in Adjuster Tool No. J37070. This will seat the components. Back off adjuster 1/4 to 1/2 turn.

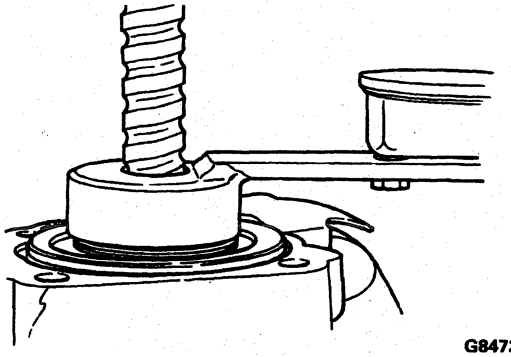

G8472-A

23. Reverse assembly in vise so the worm end is down. With a pound-inch torque wrench on the power steering gear input shaft, note torque required to rotate steering gear sector shaft (3575) 360 degrees in each direction. Tighten the bearing adjuster to increase the maximum torque at the steering gear sector shaft 0.56-1.19 N·m (5-10 lb-in) over that which was previously noted.

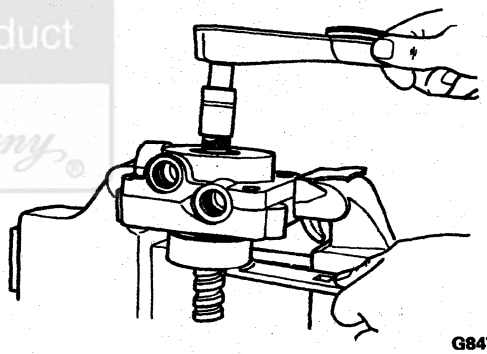

G8473-A

24. Again reverse assembly in vise. Lightly oil and assemble new lock nut onto bearing adjuster with radius (slightly rounded) side down. Tighten lock nut while holding bearing adjuster in position established in the previous step using Bearing and Seal Installation Tool J37705. When using a torque wrench in Adjuster Locknut Tool No. J37464, the torque wrench reading should be 152 N·m (112 lb-ft).

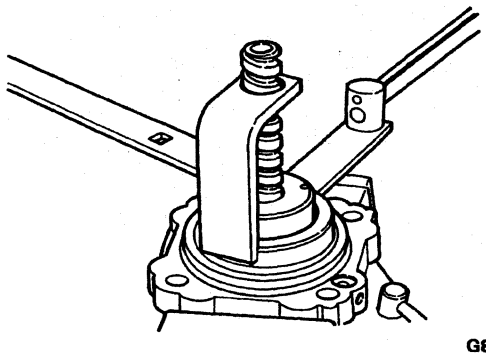

G8474-A

Official Licensed Product
Ford Motor Company

DISASSEMBLY AND ASSEMBLY (Continued)

25. Recheck input shaft torque. It should match torque measured in Step 23. Repeat Steps 23 and 24 if necessary.

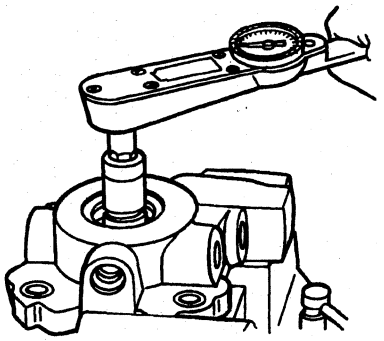

G8475-A

26. Stake valve housing into the left corners of two opposing slots in lock nut. Stake the lock nut into the adjuster in two places (180 degrees apart) at threaded area. Choose areas that have not been previously staked.

    After staking, torque required to rotate power steering gear input shaft must be 0.6-1.1 N·m (5-10 lb-in) greater than the torque noted in Step 23. Torque value must not exceed 2.5 N·m (22 lb-in). Unstake and readjust if necessary.

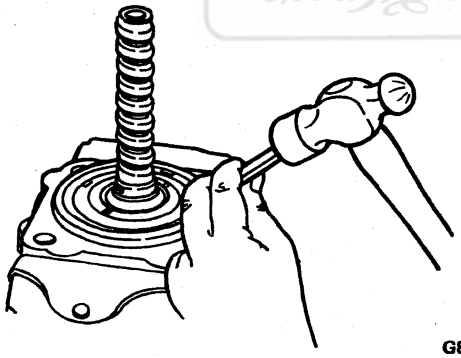

G8476-A

27. Reposition worm screw / valve housing subassembly in soft-jawed vise, clamping tightly against valve housing, so that the steering gear input worm gear and rack is pointing sideways.
28. Apply clean grease to the outside and inside diameters (fill cavity between the lips) of the new input shaft seal and assemble it, garter spring side first, over the power steering gear input shaft. Align seal in the valve housing seal bore.
29. **CAUTION: The input shaft seal must be square in the seal bore and installed to the correct depth.**

    Assemble Input Seal Installer Tool No. J37073, small diameter end first, over the power steering gear input shaft and against the seal. Tap the seal installer tool until the tool shoulder is squarely against the valve housing. This will position the seal correctly in the housing bore, just beyond the retaining ring groove.

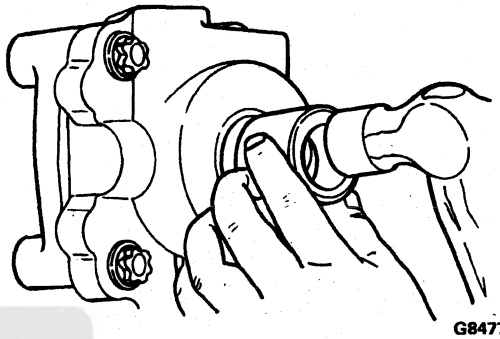

G8477-A

30. Remove any seal material that sheared off and is in seal bore and retaining ring groove.
31. Insert new retaining ring into its groove in valve housing.

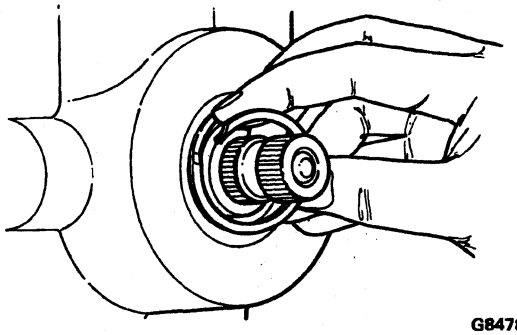

G8478-A

Ford Motor Company

DISASSEMBLY AND ASSEMBLY (Continued)

Housing Roller Bearing or Retaining Ring Replacement

1. **CAUTION: The bearing must be pressed out from the side cover side to protect seal counterbore. Be sure to use a bearing removal tool that will clear the retaining ring.**

   If the roller bearing in the housing needs to be replaced, place the bearing removal end of the Bearing and Seal Installation Tool J37705 against the side cover end of the bearing and press it out of the trunnion end of the bearing bore. Discard bearing.

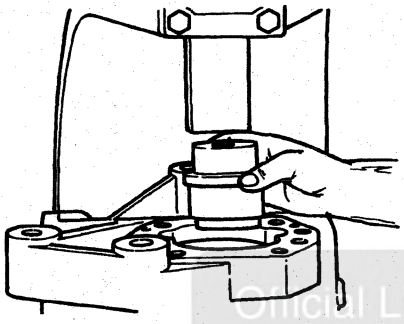

G8479-A

2. If the retaining ring that is still in the housing bearing bore needs to be replaced, remove it through the trunnion end of the bearing bore to protect the pressure seal bore area from being damaged.

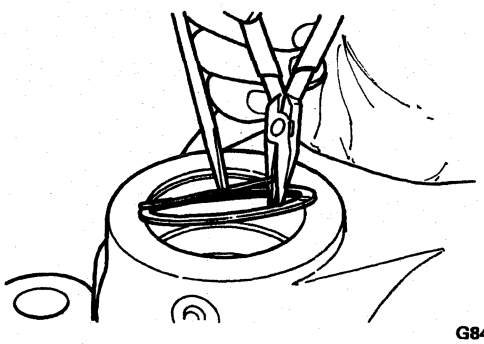

G8480-A

3. Insert retaining ring, if it was removed, into the housing bore from the trunnion end (to protect sealing area). Make sure it is seated in the retaining ring groove closest to side cover end of the bearing bore. Lubricate the bearing bore.

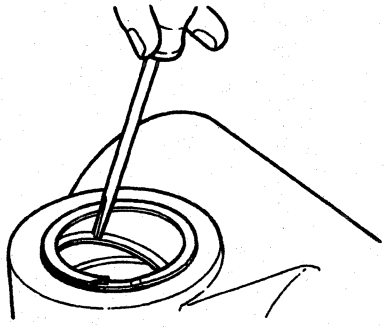

G8481-A

4. **CAUTION: Use the bearing installation end of the Bearing and Seal Installation Tool J37705. If the bearing removal end of the bearing and seal tool is used to press in bearing, the cage on the new bearing could be damaged.**

   Using Bearing and Seal Installation Tool J37705, press the roller bearing into the housing from the trunnion end of bearing bore until it is seated against the retaining ring. Be sure the housing is square with the press base and the bearing is not misaligned.

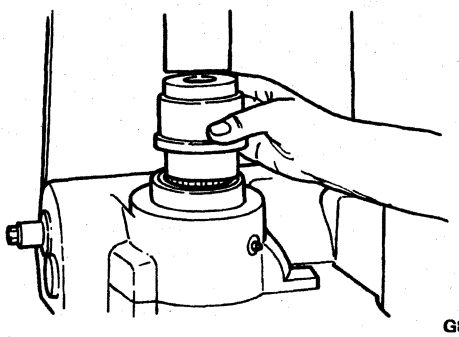

G8482-A

Official Licensed Product

DISASSEMBLY AND ASSEMBLY (Continued)

Housing Ports, Plugs, Screws and Fittings

1. If damaged, remove and replace the poppet fixed stop screw and washer. Tighten to 54 N·m (40 lb-ft).

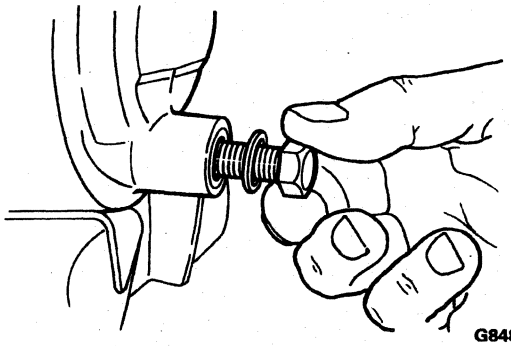

G8483-A

2. If damaged, remove poppet adjusting screw and sealing nut without allowing the nut to change its position on the screw.
3. Assemble the new nut onto the new adjusting screw, matching its position to the nut and screw removed. Tighten sealing nut to 47 N·m (35 lb-ft).

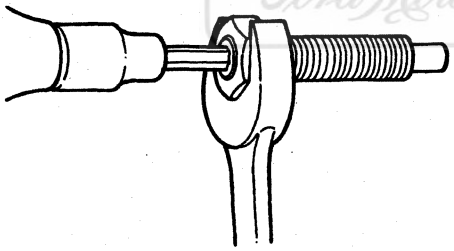

G8484-A

4. If damaged, remove and replace automatic bleed screw. Tighten to 54 N·m (40 lb-ft).

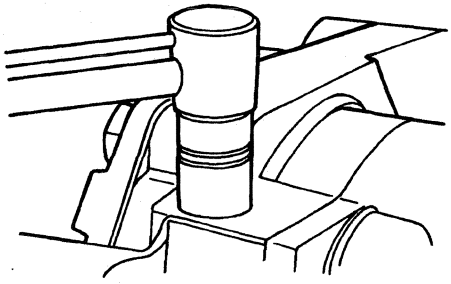

G8485-A

5. If damaged, remove and replace manual bleed screw. Tighten to 3.4 N·m (30 lb-in).
6. If damaged, remove and replace permanent auxiliary port plugs and O-rings. Assemble new O-rings on port plugs and tighten to their respective ports in the steering gear housing (3548) or valve housing to 41 N·m (30 lb-ft).

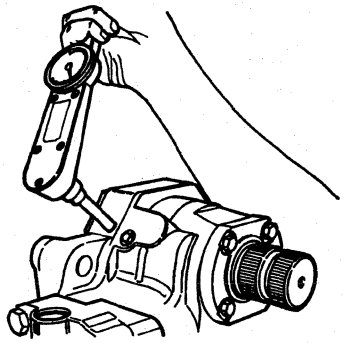

G8486-A

7. If damaged, remove grease fitting from steering gear housing. If the fitting is broken off, use suitable extractor to remove.
8. To replace, hold a piece of tubing that will clear the head of fitting over a new fitting and tap fitting into the steering gear housing.

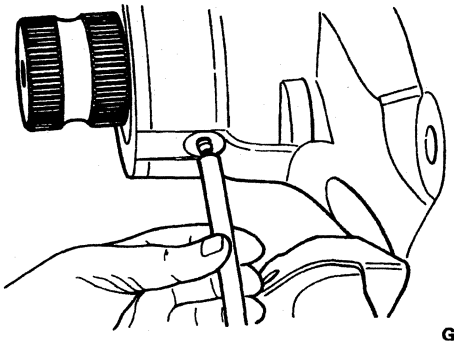

G8487-A

Similar Licensed Product
Ford Motor Company

DISASSEMBLY AND ASSEMBLY (Continued)

Final Adjustment

NOTE: The worm preload adjustment was done when the power steering gear input shaft, valve, steering gear input worm gear and rack (3524) were installed into the valve housing.

1. **CAUTION: Do not rotate the power steering gear input shaft more than one and one-half revolutions from the center position until the steering gear (3504) is installed, during the poppet setting procedure. Doing so could make the automatic poppets inoperative, which would require disassembly of the steering gear to reposition poppet seat and sleeve assemblies.**

   NOTE: Initial poppet contact will occur at less than one input shaft rotation in one direction from the steering gear center position if new or reset poppet adjuster seat and sleeve assemblies are installed in the unit.

   Use a 3/4-inch or 11/16-inch 12-point socket to rotate the power steering gear input shaft, valve, steering gear input worm gear and rack until the timing mark on the end of the steering gear sector shaft (3575) is aligned with the timing mark on the end of the housing trunnion.

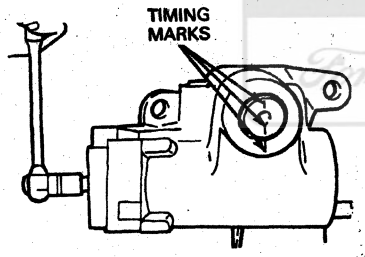

G6806-1A

2. NOTE: This procedure will properly mesh and seat the rack piston and the sector shaft teeth for final adjustments.

   Turn the steering gear sector shaft adjusting screw (3577) clockwise to provide 5.1-5.6 N·m (45-50 lb-in) of torque required to rotate the power steering gear input shaft and steering gear input worm gear and rack through 180 degrees each side of center.

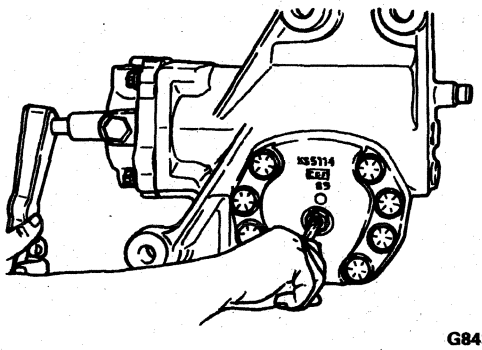

G8437-A

3. Turn the steering gear sector shaft adjusting screw counterclockwise one-half turn and note the maximum torque required to rotate the power steering gear input shaft, valve, steering gear input worm gear and rack through 180 degrees each side of center.
4. Adjust the steering gear sector shaft adjusting screw clockwise to increase the maximum torque noted in Step 3 by 0.8 N·m (7 lb-in). Tighten jam nut firmly against steering gear housing (3548) while holding the adjusting screw in place.
5. Tighten the jam nut to 58 N·m (43 lb-ft).

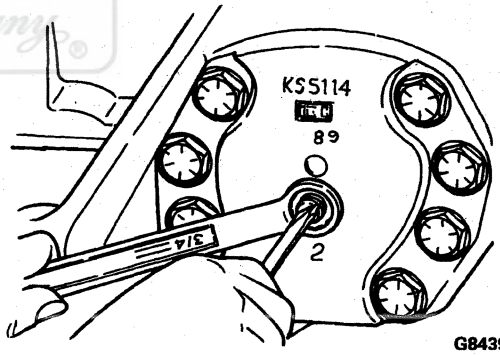

G8439-A

6. Check the rotating torque of the power steering gear input shaft, valve, steering gear input worm gear and rack again. Readjust if the torque exceeds 4.5 N·m (40 lb-in).

Official Licensed Product
Ford Motor Company

DISASSEMBLY AND ASSEMBLY (Continued)

7. Plug all ports until the steering gear is installed in the vehicle.

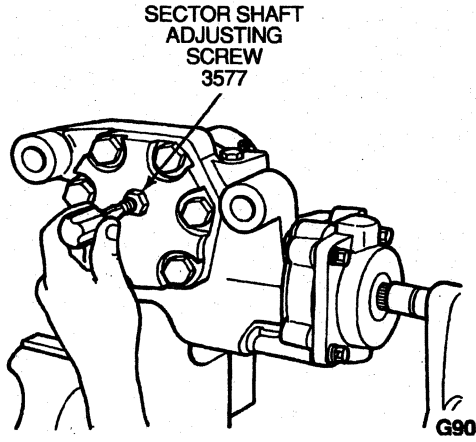

CLEANING AND INSPECTION

Steering Gear

Check to make sure that all seal surfaces and seal cavities are free from nicks and corrosion. If any part is nicked or corroded where sealing occurs, replace the parts to make sure they seal properly.

Wash all parts in a clean petroleum-base solvent. Air blow the parts until dry.

1. **WARNING: SOLVENTS ARE FLAMMABLE. BE EXTREMELY CAREFUL WHEN USING ANY SOLVENT. EVEN A SMALL EXPLOSION OR FIRE CAN CAUSE INJURY OR DEATH.**

   WARNING: WEAR SAFE EYE PROTECTION AND BE SURE TO COMPLY WITH OSHA OR OTHER MAXIMUM AIR PRESSURE REQUIREMENTS.

   Inspect the teeth of the rack piston for cracks and wear. If a step is detected by running a fingernail horizontally across the surface of the teeth, the rack piston, the steering gear sector shaft (3575) and the set of 29 balls must be replaced.

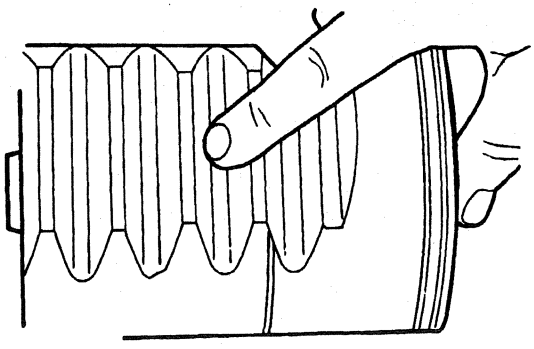

2. Inspect the internal ball-track grooves of the rack piston for brinelling (dents) or spalling (flaking). If either condition exists, replace the rack piston, power steering gear input shaft, steering gear input worm gear and rack (3524), and the set of balls as an assembly.

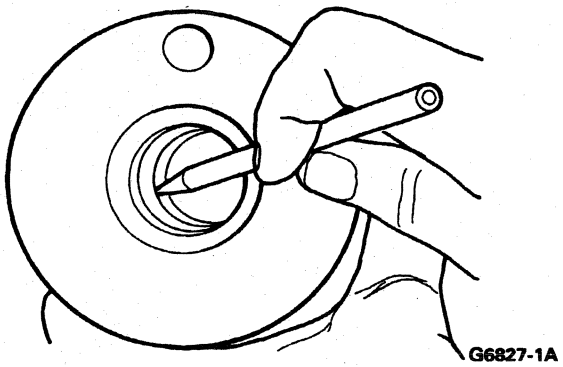

3. Inspect the power steering gear input shaft, steering gear input worm gear and rack, ball track grooves, thrust bearing and the ball bearing areas for brinelling (dents) or spalling (flaking). Inspect the sealing areas of the power steering gear input shaft and valve for nicks. Run a fingernail edge across the sealing surfaces to detect steps. Inspect for discoloration from excess heat. If any of these conditions exists, replace the power steering gear input shaft, valve housing, steering gear input worm gear and rack, and the set of balls as an assembly. Also replace rack piston if brinelling or spalling is found.

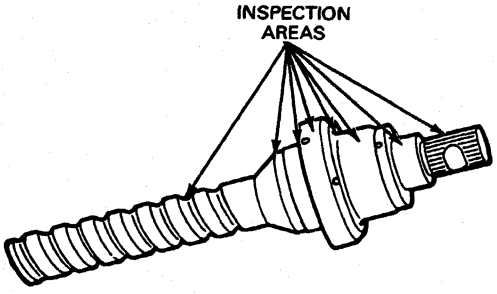

4. NOTE: In performing the internal leakage test after assembling the steering gear (3504), make sure internal leakage over 3.8 lpm (1.0 gpm) is not caused by the improper installation of seals on the steering gear input worm gear and rack, power steering control valve actuator (3783), and valve assembly.

   Replace the housing only if internal leakage is greater than 3.8 lpm (1.0 gpm). Make sure a seal is not causing the leak. The bore of the housing might show signs of scoring, but these signs might indicate normal wear.

Official Licensed Product Ford Motor Company

CLEANING AND INSPECTION (Continued)

5. Inspect the face of the housing for nicks that will prevent proper sealing. Replace the housing if the nicks cannot be easily removed with a fine-tooth flat file without damage to the housing.
6. Inspect side cover DU bushing for damage. Also check side cover bushing to sector shaft clearance. If damage exists, or if clearance exceeds 0.20 mm (0.008 inch), replace side cover / bushing assembly.

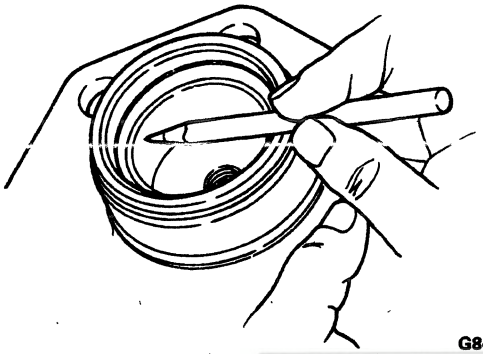

G8417-A

7. NOTE: A service steering gear sector shaft will have the adjusting screw and the retainer installed. The screw and the retainer can be serviced separately.

   Remove all masking tape from the steering gear sector shaft. Inspect the bearing, sealing and tooth contact surfaces on the steering gear sector shaft for brinelling, spalling or cracks. Run the edge of a fingernail across these areas to detect steps. Inspect for cracks. Look for twisted or damaged serrations. Replace the steering gear sector shaft if any of these conditions exists.

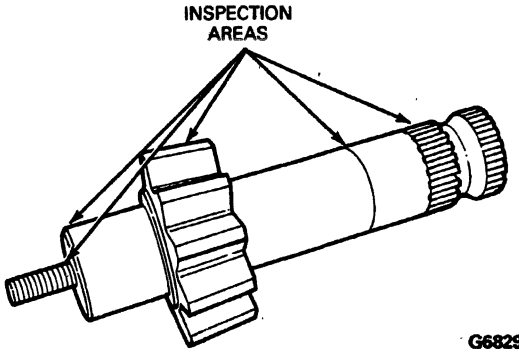

G6829-1A

System Flushing

Always flush steering gear housing (3548) when replacing power steering pump (3A674) due to fluid contamination.

1. Fill power steering oil reservoir (3A697) with Motorcraft MERCON® ATF XT-2-QDX or MERCON® equivalent.
2. Disconnect ignition coil wire and raise front wheels off floor.
3. While adding approximately 1.9 liters (0.5 gal.) of fluid, turn key to START position and crank engine with starter motor while turning steering wheel from stop to stop.
4. When all fluid has been added, turn key to OFF position and connect ignition coil wire.
5. Remove plug from the power steering return hose (3A713) nipple. Attach power steering return hose to nipple. Tighten hose clamp to 0.9-2.7 N·m (8-24 lb-in).
6. **CAUTION: Do not overfill power steering oil reservoir.**

   Check fluid level. Add fluid if necessary.
7. Lower vehicle.
8. Start engine and turn steering wheel (3600) slowly from lock to lock several times. Check fluid level and adjust as required.

Pump Flushing

If dirt is found in the steering gear (3504), flush the power steering pump (3A674) as follows.

1. Make sure all hoses are connected, then disconnect the power steering pressure hose (3A719) at the steering gear.
2. Place the power steering pressure hose in a container.
3. Fill the power steering oil reservoir (3A697) with Motorcraft MERCON® ATF XT-2-QDX or MERCON® equivalent.
4. Disconnect the ignition coil wire and raise front wheels off floor.
5. While adding approximately 1.9 liters (0.5 gal.) of fluid; turn ignition switch (11572) to the START position, and crank the engine with the starter motor. As soon as all fluid has been added, turn the ignition switch to the OFF position.
6. Attach the power steering pressure hose at the gear.
7. Check the fluid level.
8. Crank the engine with the starter motor and add fluid until the level remains constant.
9. Lower vehicle and connect the ignition coil wire.
10. Start the engine and turn the steering wheel (3600) from stop to stop to expel any air trapped in the system. This will restore normal steering action.

CLEANING AND INSPECTION (Continued)

Steering Gear Input Shaft and Control

Refer to Steering Gear in the Disassembly and Assembly portion of this section.

Steering Gear Sector Shaft

Refer to Steering Gear Disassembly and Assembly in this section.

Steering Gear Housing

Refer to Steering Gear in the Cleaning and Inspection portion of this section.

ADJUSTMENTS

Drive Belt Tension

Refer to Section 03-05 in the Powertrain, Drivetrain Manual.

Sector Shaft Adjustment

NOTE: Refer to the disassembled view under Steering Gear in the Disassembly and Assembly portion of this section.

1. **CAUTION: This adjustment must be performed with the steering gear sector shaft (3575) on its center of travel.**

   CAUTION: The power steering gear input shaft must not be rotated more than one and one-half revolutions when the steering sector shaft arm drag link (3304) is disconnected from the steering gear (3504) to avoid possible misadjustment of the automatic poppet system.

   NOTE: If the adjusting screw jam nut is accessible, this adjustment can be completed on the vehicle. Otherwise, the steering gear must be removed from the vehicle. Refer to Steering Gear in the Removal and Installation portion of this section.

   NOTE: If this adjustment is being performed with the steering gear on the vehicle, remove the steering sector shaft arm drag link from the steering gear sector shaft arm (3590).

   Put the steering gear sector shaft in the center of travel. Rotate the power steering gear input shaft until the timing marks across the end of the steering gear sector shaft are perpendicular to the power steering gear input shaft, and the steering gear input worm gear and rack (3524) is in line with the timing mark on the end of the housing trunnion.

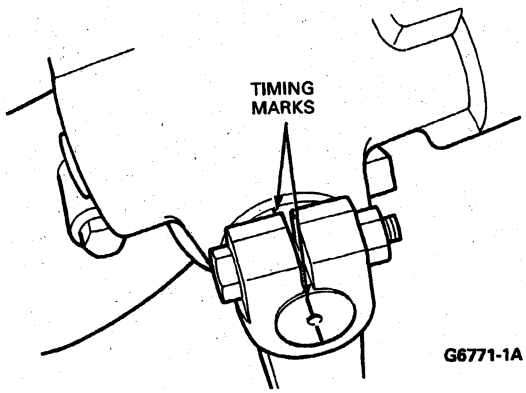

G6771-1A

2. With the steering gear in the center position, grasp the steering gear sector shaft arm and gently try to move the steering gear sector shaft arm back and forth in the direction of travel. Finger-tip force is adequate to detect the lash of a loose steering gear sector shaft. There must be no movement of the power steering gear input shaft or the steering gear sector shaft.

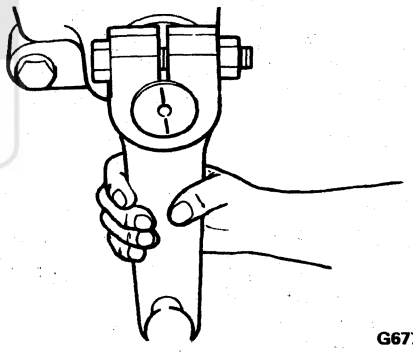
G6772-B

3. Loosen the jam nut on the sector shaft adjusting screw. If no lash was detected, turn the adjusting screw counterclockwise until lash is detected at the steering gear sector shaft.
4. **CAUTION: Overadjustment of the shaft adjusting screw in the clockwise direction could result in a no-recovery, oversteering or darting condition of the vehicle.**

   To adjust, slowly turn the adjusting screw clockwise until no lash is felt at the steering gear sector shaft arm. Use no more than 14 N·m (11 lb-ft) of torque. From the no-lash position, turn the screw clockwise an additional 1/8-3/16 turn. Hold the adjusting screw in place and tighten the jam nut to 58 N·m (43 lb-ft).
5. Turn the power steering gear input shaft 1/4 turn each side of center and recheck the steering gear sector shaft arm for lash. No lash should be felt. If lash exists, repeat Steps 1-4.

Official Licensed Product

ADJUSTMENTS (Continued)

6. **CAUTION: Maintain grease in the sector shaft bearing through the grease fitting in the housing using only a hand-operated grease gun. Add grease until it begins to extrude past the power steering gear input shaft seal (3D526). Do not use a power grease gun because it will supply grease too fast. This could adversely affect the high-pressure seal and contaminate the hydraulic fluid.**

   If the adjustment was done with the steering gear on the vehicle, install the steering sector shaft arm drag link to the steering gear sector shaft arm. If the steering gear was removed from the vehicle, install the steering gear in the vehicle. Refer to Steering Gear in the Removal and Installation portion of this section.

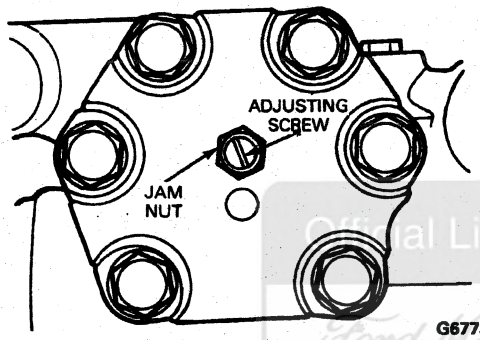

Original Licensed Product
Ford Motor Company

Poppet Valve Manual Readjustment

NOTE: This resetting procedure will work in most cases with at least 1-3/4 hand wheel turns from each side of center. If you are making a large reduction in wheel cut and this procedure does not work, you may have to internally reset the poppets. Refer to Poppet Component Replacement in the Disassembly and Assembly portion of this section.

The steering gear (3504) is equipped with two hydraulic pressure relieving poppet valves that were automatically set to trip, relieving pressure just before reaching the axle stops. This was achieved after initial installation into the vehicle at the first full right and left turns. The pressure-relieving poppet valves will automatically reset themselves within the poppet adjustment limits if the axle stops are reset for increased steering gear travel based on acceptable equipment revisions from original factory installations.

To determine if the poppets require readjustment or if they are performing properly, install a Power Steering System Analyzer (PSSA) between the power steering pump (3A674) and the steering gear. If poppet readjustment is necessary, you can leave the PSSA in the system to verify that the following procedure is completed properly.

Poppets might need to be readjusted because of the following:

- reduced vehicle wheelcut
- steering gear sector shaft arm (3590) mistimed, condition corrected
- steer axle stop bolt(s) were bent or broken
- steer axle U-bolt(s) were bent or broken

An alternate method of manually resetting the poppet valves with the steering gear installed in the vehicle is done by using Ross Special Service Tools, Poppet Adjusting Screw J37070 and Jam Nut J37464 or equivalent.

1. Check the maximum turn angle of the front wheels. Refer to the Specifications portion of Section 04-00 for specifications.
2. NOTE: The steering gear will have either a fixed stop screw or an adjusting screw. If the adjusting screw is already part of the steering gear, back the nut off the adjusting screw until it is flush with the end of the adjusting screw.

   NOTE: Perform this step with the wheels in the straight-ahead position, the steering gear in its center position, and only when the timing marks on the end of the steering gear sector shaft (3575) and the housing trunnion are aligned.

   Turn adjusting screw into the non-sealing end of jam nut until the drive end of the screw is flush with the nut.

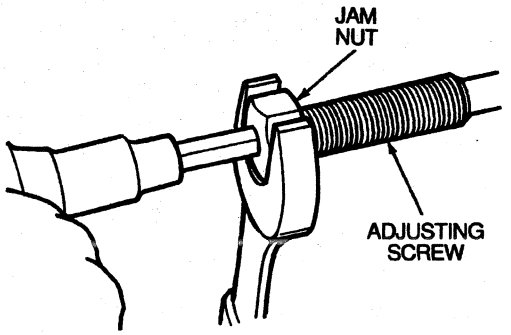

ADJUSTMENTS (Continued)

3. NOTE: If the unit has a poppet adjusting screw and sealing nut that need to be replaced, remove and discard them.

   With the vehicle unloaded, the engine off and the wheels in the straight-ahead position, remove and discard the fixed stop screw, if so equipped, and the washer from the lower end of the steering gear housing (3548).

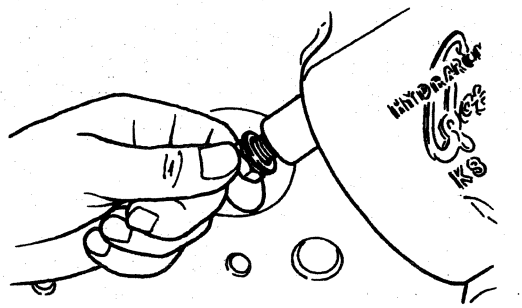

G8401-A

4. Install the adjusting screw and the sealing nut assembly (without moving the nut on the screw) into the steering gear housing until the nut is firmly against the steering gear housing. Tighten the sealing nut against the steering gear housing.

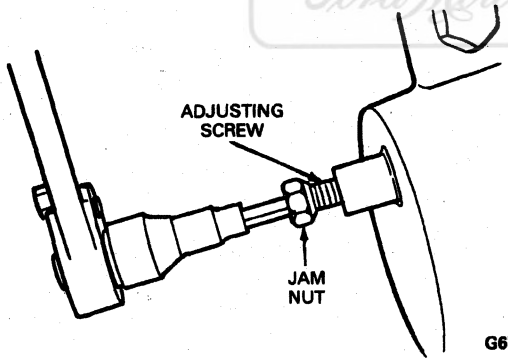

G6775-B

5. **CAUTION: Do not mix fluid types. Mixing transmission fluid, motor oil, or other hydraulic fluids will cause seals to deteriorate faster.**

   Fill the power steering oil reservoir (3A697) with Motorcraft MERCON® ATF XT-2-QDX or MERCON® equivalent.
6. Place a jack under the center of the front axle and jack up the front end of the vehicle so the steering axle tires are off the ground.
7. Start the engine and let it run at idle speed.
8. Note which output shaft timing mark is nearest the housing piston bore.
9. Turn the steering wheel (3600) in the direction that makes this timing mark move toward the adjusting screw just installed. Turn in this direction until axle stop contact is made.
10. Pull hard on the steering wheel (put 30 pounds rim pull on a 20-inch diameter steering wheel) after the axle stop is contacted.
11. Turn the steering wheel in the opposite direction (end of timing mark away from adjusting screw) until the other axle stop is contacted.
12. Pull hard on the steering wheel (put 30 pounds rim pull on a 20-inch diameter steering wheel).
13. Release the steering wheel and shut off the engine. Do not steer again until Step 16 is completed.
14. Loosen the sealing nut and back out the adjusting screw 25-27 mm (1-1/16 inch) until the screw is past the nut. Tighten the sealing nut against the housing.
15. Start the engine and let it idle.
16. **CAUTION: Do not hold the steering wheel in position for more than 10 seconds at a time. Excessive heat buildup may damage components.**

    Turn the steering wheel in the original direction (end of timing mark toward adjusting screw) until axle stop contact is made.
17. Hold the steering wheel in this position (with 30 pounds rim pull) for 10 seconds, then release. Repeat the hold and release process as many times as necessary while completing Step 20.
18. With steering wheel held tightly at full turn, loosen the jam nut and hold it in place with a wrench.
19. Turn the adjusting screw (clockwise) finger-tight (do not use a ratchet) until the Allen wrench comes to a stop. Do not attempt to turn the adjusting screw in any further. Pause the turning of the screw each time the driver releases the steering wheel. Continue turning the screw only while the wheel is held at full turn.
20. Back off the adjusting screw 3-1/4 turns, and tighten sealing nut. Tighten the sealing nut to 47 N·m (35 lb-ft).
21. Cut off the screw that is exposed beyond the nut flush with the top of the nut to prevent interference with the steering gear sector shaft arm.
22. Check the reservoir and fill if required.

In-Vehicle Adjustment

Refer to Sector Shaft Adjustment in the Adjustments portion of this section.

Valve Housing Adjustment

Refer to Steering Gear in the Disassembly and Assembly portion of this section.

SPECIFICATIONS

LUBRICANT/ADHESIVE/CLEANER SPECIFICATIONS

Description	Part Number	Ford Specification
High Temperature Front Axle and Wheel Bearing Grease	E8TZ-19590-A	ESA-M1C198-A
Motorcraft MERCON® ATF	XT-2-QDX	MERCON®

TORQUE SPECIFICATIONS

Part Name	Item No.	Torque Range Dry			Torque Range Lubricated		
		N·m	Lb-Ft	Lb-In	N·m	Lb-Ft	Lb-In
Auxiliary Cylinder Plug	55	41	30	—	—	—	—
Ball Return Guide Cap Screws	33	19-30	14-22	—	—	—	—
Ball Return Guide Clip Bolts	34	19-30	14-22	—	—	—	—
Bearing Adjuster	18	—	—	—	18	13	—
Locknut	19	—	—	—	152	112	—
Manual Bleed Screw	—	3-4	—	30	—	—	—
Pitman Arm Clamp Bolt	—	293-406	220-300 (Unplated)	—	—	—	—
Automatic Bleed Screw	43	54	40	—	—	—	—
Poppet Sleeve Assembly	23	14	11	—	—	—	—
Poppet Sealing Nut, Service	—	47	35	—	—	—	—
Poppet Fixed Stop Screw	44	54	40	—	—	—	—
Relief Valve Cap	56	41	30	—	—	—	—
Sector Shaft Adjusting Screw Jam Nut	49	58	43	—	—	—	—
Side Cover Bolts (TAS40)	54	217	160	—	160	118	—
Valve Housing Bolts	1	149	110	—	109	80	—
Input Shaft U-Joint Pinch Bolt	—	42-57	32-41	—	—	—	—
Steering Gear to Frame Mounting Bolts	—	299-406	220-300	—	—	—	—

Official Licensed Product Ford Motor Company

Operational Specifications

The recommended minimum flow at 1-1/2 steering wheel turns per second is 8.3 lpm (2.2 gpm).

SPECIAL SERVICE TOOLS/EQUIPMENT

SPECIAL SERVICE TOOLS REQUIRED

Tool Number/ Description	Illustration
T64P-3590-F Pitman Arm Puller	T64P-3590-F

SPECIAL SERVICE TOOLS — KENT MOORE

Tool Number	Description
J36452-A	Poppet Adjusting Seat Tool
J36452-B	Poppet Disassembly Tool
J37464	Adjuster Locknut Tool
J37070	Adjuster Tool
J37073	Input Seal Installer Tool
J37705	Bearing and Seal Installation Tool

SECTION 11-03 Steering Linkage

SUBJECT	PAGE
VEHICLE APPLICATION	11-03-1
DESCRIPTION AND OPERATION	
Steering Linkage	11-03-1
DIAGNOSIS AND TESTING	
Steering Linkage	11-03-6
REMOVAL AND INSTALLATION	
Adjusting Sleeve	11-03-7
Drag Link	11-03-9
Drag Link, Steering Sector Shaft Arm, All Except F-Super Duty Motorhome Chassis	11-03-9
REMOVAL AND INSTALLATION (Cont'd.)	
Drag Link, Steering Sector Shaft Arm, F-Super Duty Motorhome Chassis	11-03-9
Spindle/Steering Arm	11-03-11
Steering Gear Sector Shaft Arm	11-03-10
Steering Linkage, Damper Assembly, F-350 4x4 and F-Super Duty Chassis Cab	11-03-7
SPECIFICATIONS	11-03-11
SPECIAL SERVICE TOOLS/EQUIPMENT	11-03-11

VEHICLE APPLICATION

F-250 Heavy Duty, F-350 and F-Super Duty

DESCRIPTION AND OPERATION

Steering Linkage

The steering linkage, which connects the steering gear sector shaft arm (3590) to the front wheel spindles (3105), is composed of a steering sector shaft arm drag link (3304) and tie rod end (3A130). The steering gear sector shaft arm transfers the steering gear (3504) movements through the steering sector shaft arm drag link and tie rod end to the right and left front wheel spindles.

The F-250 Heavy Duty, F-350 and F-Super Duty Chassis Cab steering linkage has adjustments in both the tie rod end and the steering sector shaft arm drag link.

The steering linkage on F-Super Duty Motorhome vehicles uses spindle assemblies with separate front wheel spindle tie rods (3280). These are of the tapered arm or bolt-on arm types. A front wheel spindle tie rod, adjustable for toe-in, is connected between the left and right front wheel spindle tie rod adjusting sleeves (3310). A steering sector shaft arm drag link is connected between the steering arm on the left front wheel spindle and the steering gear sector shaft arm on the steering gear.

Official Licensed Pr... Company

DESCRIPTION AND OPERATION (Continued)

Steering Linkage, F-250 Heavy Duty and F-350 4x2

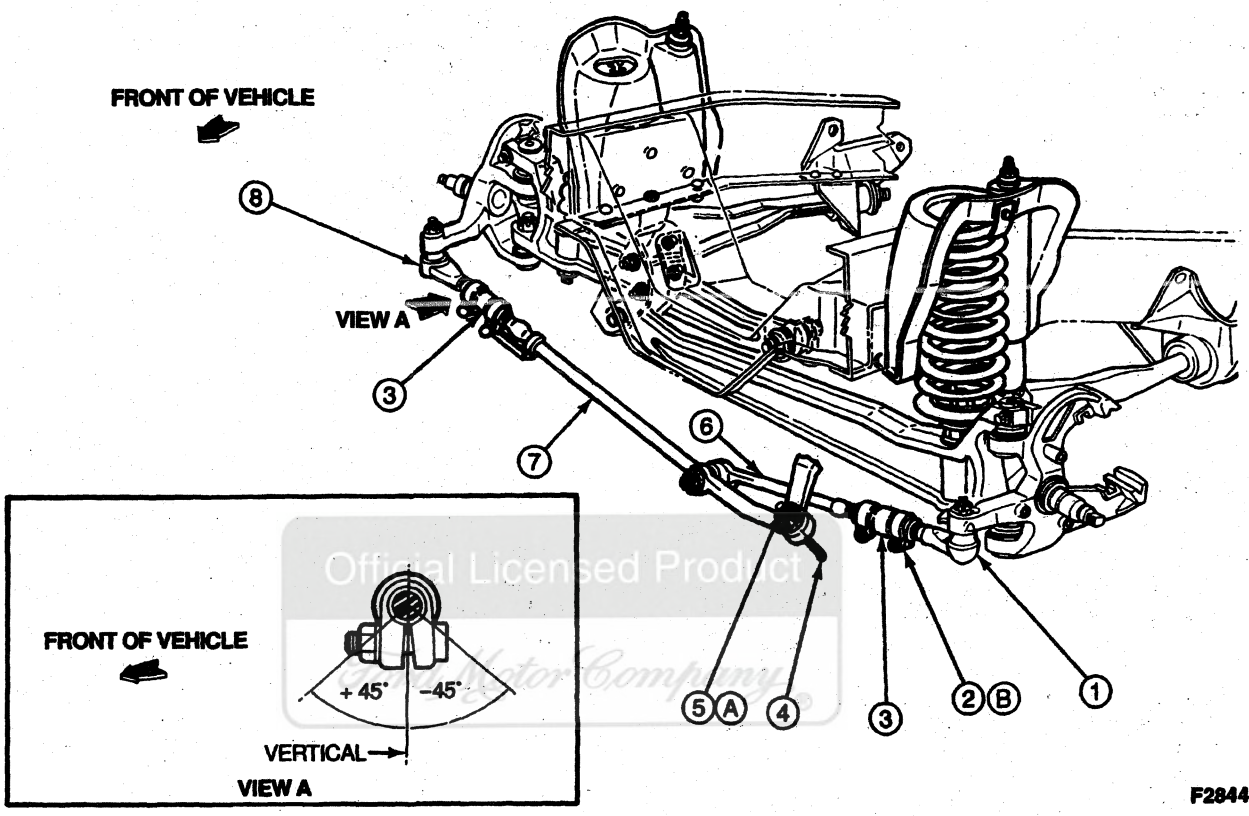

F2844-N

Item	Part Number	Description
1	—	Tie Rod Ball Stud (Part of 3A131)
2	3287	Tie Rod Adjusting Sleeve Clamp
3	3310	Front Wheel Spindle Tie Rod Adjusting Sleeve
4	642569	Cotter Pin
5	N800895-S56	Nut

(Continued)

Item	Part Number	Description
6	3A131	Tie Rod End
7	3304	Steering Sector Shaft Arm Drag Link
8	—	Drag Link Ball Stud (Part of 3304)
A	—	Tighten to 70-100 N·m (51-73 Lb-Ft)
B	—	Tighten to 40-57 N·m (30-42 Lb-Ft)

Official Licensed Product Ford Motor Company

DESCRIPTION AND OPERATION (Continued)

Steering Linkage, F-250 Heavy Duty 4x4

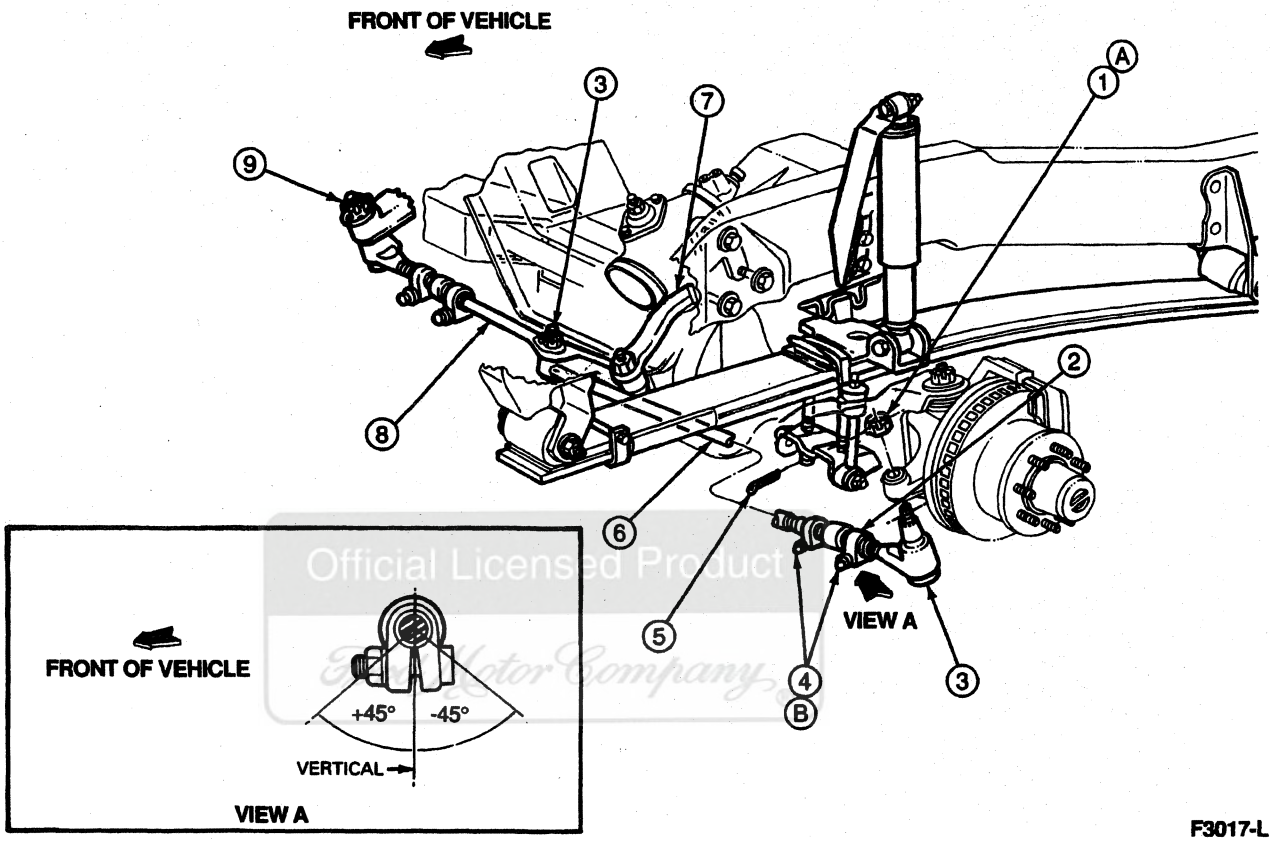

F3017-L

Item	Part Number	Description
1	N800895-S56	Nut
2	3310	Front Wheel Spindle Tie Rod Adjusting Sleeve
3	—	Tie Rod Ball Stud (Part of 3A131)
4	3287	Tie Rod Adjusting Sleeve Clamp
5	642569	Cotter Pin
6	3B008	Tie Rod

(Continued)

Item	Part Number	Description
7	3590	Steering Gear Sector Shaft Arm
8	3304	Steering Sector Shaft Arm Drag Link
9	—	Drag Link Ball Stud (Part of 3304)
A	—	Tighten to 70-100 N·m (51-73 Lb-Ft)
B	—	Tighten to 40-57 N·m (30-42 Lb-Ft)

Official Licensed Product Ford Motor Company

DESCRIPTION AND OPERATION (Continued)

Steering Linkage, F-350 4x4 Monobeam Axle

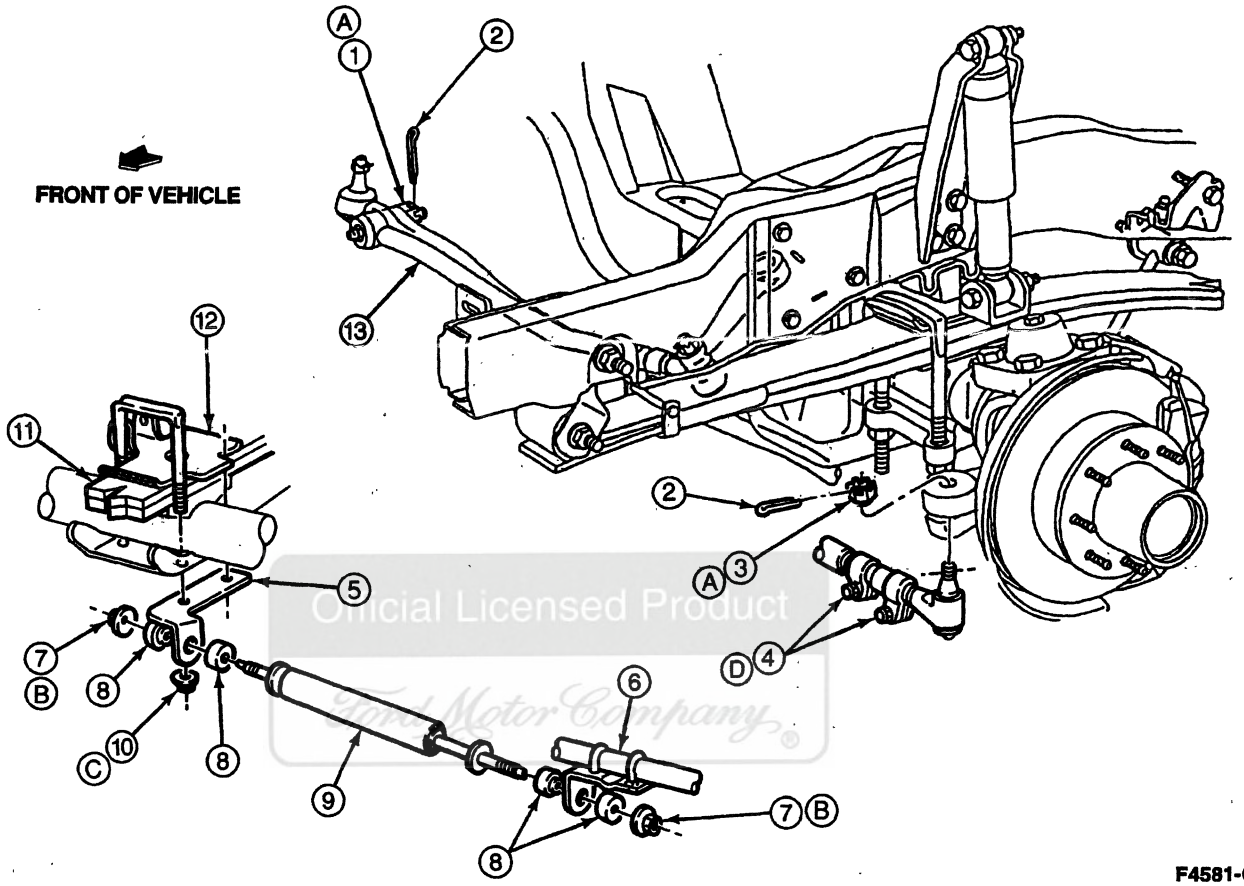

F4581-G

Item	Part Number	Description
1	N800895-S56	Nut
2	N642569-S36	Cotter Pin
3	N800895-S56	Nut
4	3287	Tie Rod Adjusting Sleeve Clamp
5	3E652	Steering Damper Bracket
6	3B008-DA	Steering Rod and Link Assy
7	N806888-S56	Nut and Washer
8	N806889-S	Insulator
9	3E651	Steering Damper

(Continued)

Item	Part Number	Description
10	N801342-S2	Nut and Washer
11	5310	Front Spring
12	5458	Spring Plate Spacer
13	3B008	Steering Rod and Link
A	—	Tighten to 70-100 N·m (51-73 Lb-Ft)
B	—	Tighten to 34-48 N·m (25-35 Lb-Ft)
C	—	Tighten to 115-163 N·m (85-120 Lb-Ft)
D	—	Tighten to 40-57 N·m (30-42 Lb-Ft)

Official Licensed Product
Ford Motor Company

DESCRIPTION AND OPERATION (Continued)

Steering Linkage, F-Super Duty Chassis Cab

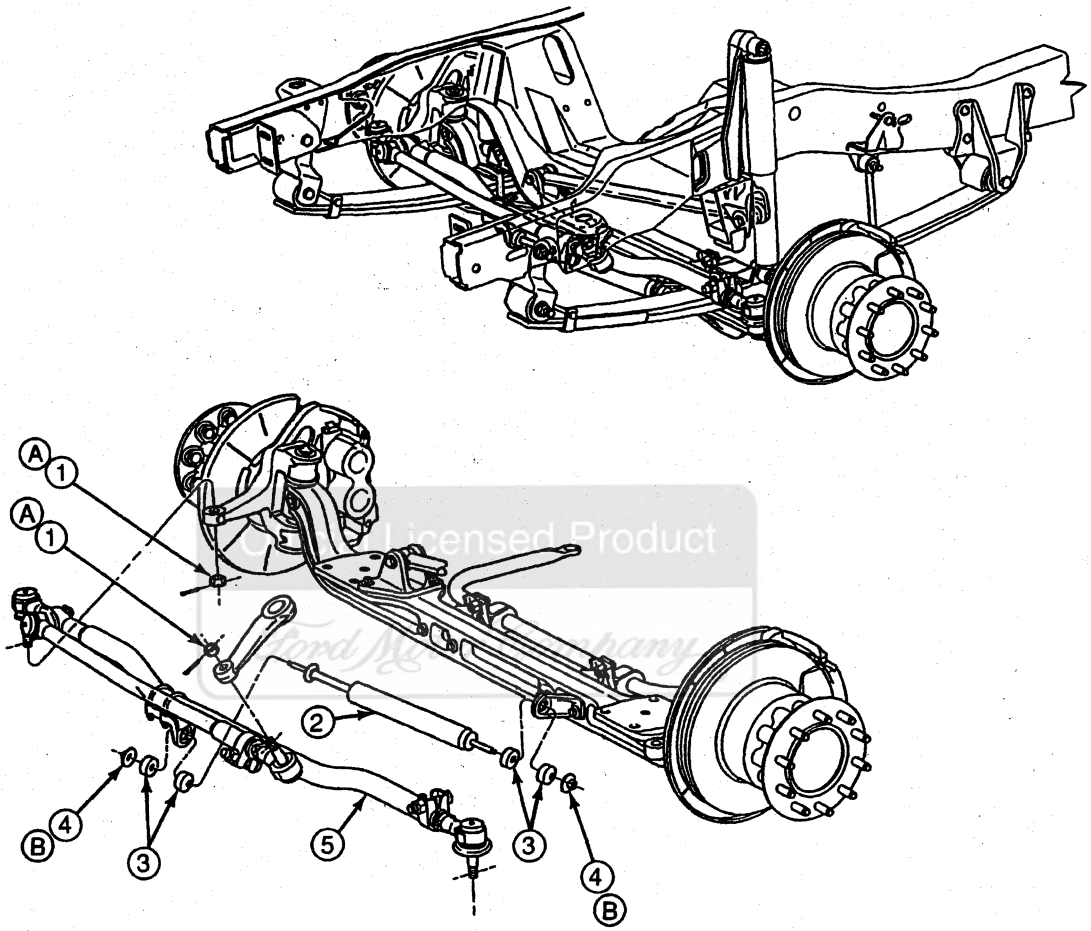

G6344-G

Item	Part Number	Description
1	N800895-S56	Nut
2	3E651	Damper
3	N806889-S	Insulator
4	N806888-S56	Nut and Washer

(Continued)

Item	Part Number	Description
5	3B008	Rod and Link Assy
A	—	Tighten to 78-103 N·m (58-76 Lb-Ft)
B	—	Tighten to 34-48 N·m (25-35 Lb-Ft)

DESCRIPTION AND OPERATION (Continued)

Steering Linkage, F-Super Duty Motorhome Chassis Vehicles

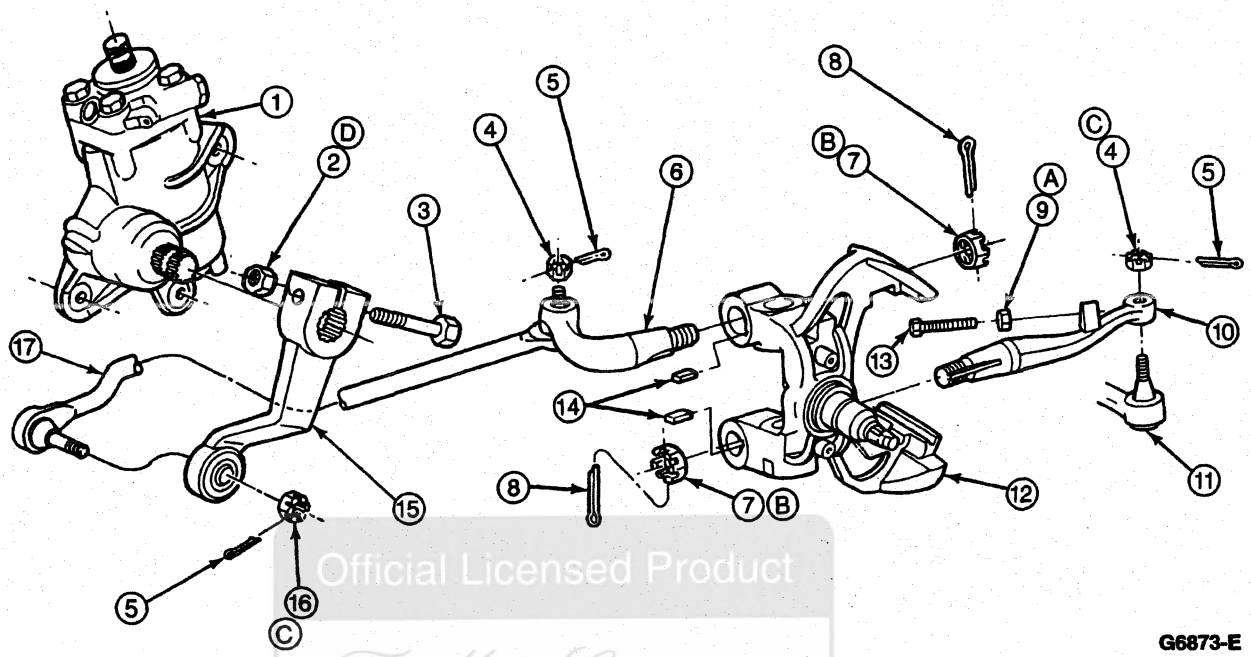

G6873-E

Official Licensed Product
Ford Motor Company

Item	Part Number	Description
1	3N503	Power Steering Gear
2	3B3218	Nut
3	58749-S2	Bolt
4	N800895-S56	Nut
5	72071-S36	Cotter Pin
6	3146	Steering Arm
7	383219	Nut
8	72109-S36	Cotter Pin
9	33942-S2	Lock Nut
10	3130	Steering Spindle Arm
11	3280	Front Wheel Spindle Tie Rod
12	3105	Front Wheel Spindle

(Continued)

Item	Part Number	Description
13	33942-S2	Steering Stop Bolt
14	3138	Keys, Steering Spindle Arm
15	3590	Arm, Steering Gear Pitman
16	383218-S100	Nut
17	3304	Steering Sector Shaft Arm Drag Link
A	—	Tighten to 50-70 N·m (37-52 Lb-Ft)
B	—	Tighten to 70-100 N·m (51-73 Lb-Ft)
C	—	Tighten to 75-105 N·m (55-77 Lb-Ft)
D	—	Tighten to 300-400 N·m (220-300 Lb-Ft)

DIAGNOSIS AND TESTING

Steering Linkage

Refer to Section 11-00.

REMOVAL AND INSTALLATION

Adjusting Sleeve

CAUTION: Do not attempt to straighten a bent tie rod end (3A131).

Replace the ball stud if loose in the steering control ball stud socket (3A754) or the tie rod end is bent. Replace the front suspension steering ball stud dust seal (3332) if any nicks, cuts or tears are present.

Removal

1. Raise the vehicle on a hoist with the wheels in the straight-ahead position.
2. Remove the nut and cotter pin from the tie rod ball stud at front wheel spindle (3105). Remove the ball stud from the wheel spindle using Tie Rod End Remover TOOL-3290-D or equivalent.
3. Loosen the nuts on front wheel spindle tie rod adjusting sleeve (3310).
4. Hold the tie rod adjusting sleeve (3281) and remove the tie rod ball socket from the tie rod adjusting sleeve. Count the number of turns it takes to remove the ball stud from the tie rod adjusting sleeve.
5. Remove the tie rod adjusting sleeve from the steering tie rod. Count the number of turns it takes to remove the tie rod adjusting sleeve from the steering tie rod assembly.

Installation

1. Follow removal procedure in reverse order.
2. Tighten nuts to 40-57 N·m (30-42 lb-ft).
3. Make sure adjuster clamps are in the correct position.
4. Check toe. Refer to Section 04-00.
5. Check clear vision. Refer to Section 11-00.

Steering Linkage, Damper Assembly, F-350 4x4 and F-Super Duty Chassis Cab

Removal

1. Remove nut attaching the damper to bracket on steering linkage.
2. Remove nut attaching the damper to right damper bracket (F-350) or axle bracket (F-Super Duty).
3. NOTE: The damper right bracket (F-350) or damper axle bracket (F-Super Duty) and steering linkage bracket can be removed from vehicle by removing the retaining bolts and nuts.

   Remove damper from attaching brackets.

Installation

1. NOTE: If a new steering linkage bracket is being installed, make sure the bracket is properly positioned on the steering sector shaft arm drag link (3304) before tightening the U-bolt retaining nuts.

   If the damper right bracket (F-350), axle bracket (F-Super Duty) or the steering linkage bracket was removed, install onto vehicle. Tighten to 24-30 N·m (18-22 lb-ft).
2. Install the damper in the attaching brackets.
3. Install the nut that attaches the damper to the right bracket (F-350) or axle bracket (F-Super Duty) to 34-48 N·m (25-35 lb-ft).
4. Install the nut that attaches the damper to the steering linkage bracket to 34-48 N·m (25-35 lb-ft).
5. Rotate the steering wheel from stop to stop. Check that the steering linkage damper is not bottoming out and that the steering linkage reaches its full travel when the steering wheel is turned from stop to stop.

REMOVAL AND INSTALLATION (Continued)

Steering Linkage Damper

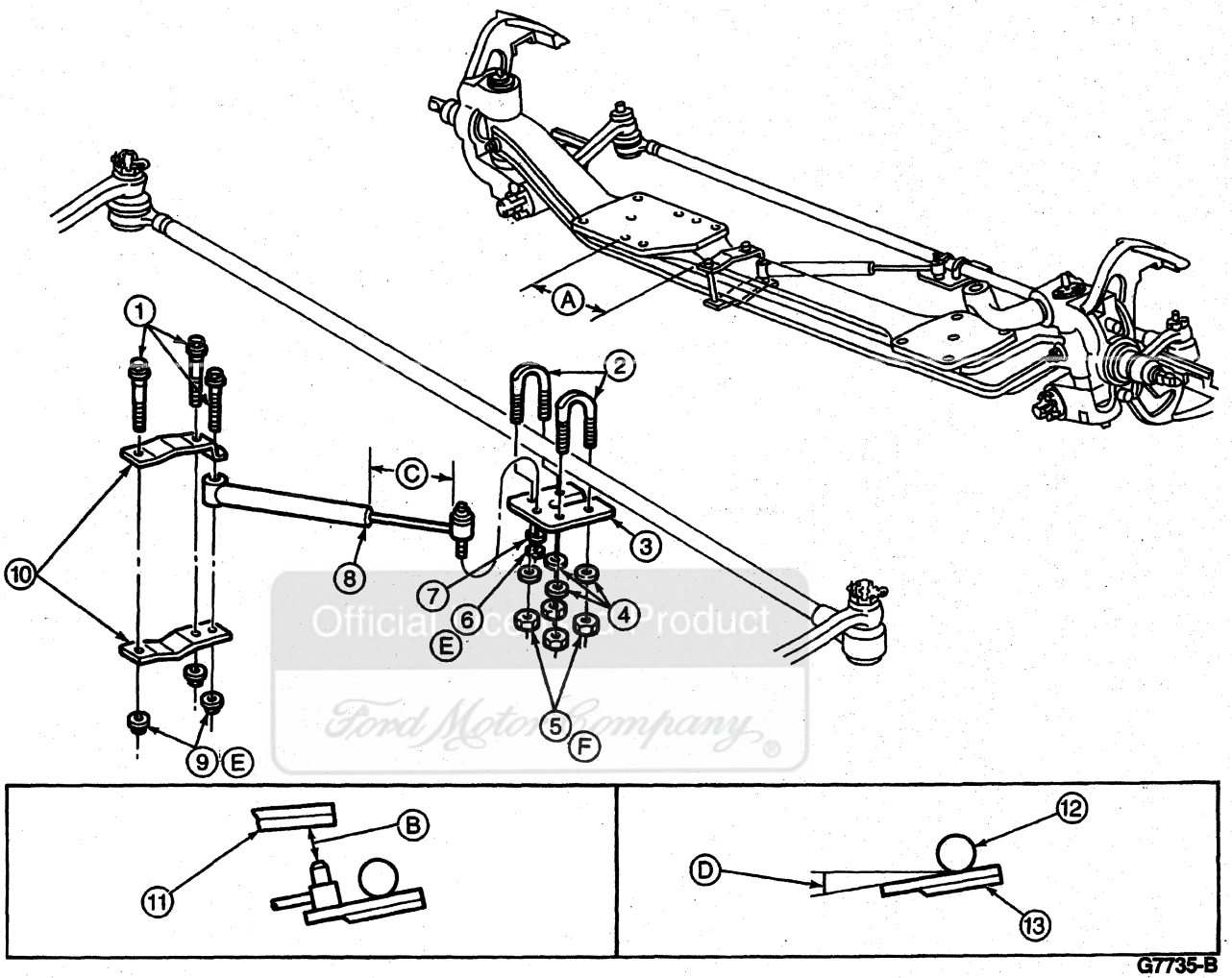

G7735-B

Item	Part Number	Description
1	—	Bolt (Part of 3E652)
2	1L433	U-Bolt
3	—	Tie Rod Bracket (Part of 3E652)
4	—	Flatwasher (Part of 3E652)
5	N620468-S2	Nut
6	—	Nut (Part of 3E652)
7	—	Lockwasher (Part of 3E652)
8	3E651	Damper Assy
9	—	Nut (Part of 3E652)
10	3E653	Bracket

(Continued)

Item	Part Number	Description
11	5310	Front Spring
12	3A130	Tie Rod End
13	—	Bracket (Part of 3E652)
A	—	109.5 mm (3.3 Inches)
B	—	19 mm (3/4 Inch)
C	—	158.8 mm (6.25 Inches)
D	—	5 Degrees
E	—	Tighten to 65-90 N·m (48-66 Lb-Ft)
F	—	Tighten to 24-30 N·m (18-22 Lb-Ft)

REMOVAL AND INSTALLATION (Continued)

Drag Link, Steering Sector Shaft Arm, All Except F-Super Duty Motorhome Chassis

Replace the steering sector shaft arm drag link (3304) if the ball stud is loose in the steering control ball stud socket (3A754) or the steering sector shaft arm drag link is bent. Replace the front suspension steering ball stud dust seal (3332) if any nicks, cuts or tears are present. Do not attempt to straighten a steering sector shaft arm drag link.

Removal

1. Raise the vehicle on a hoist with the wheels in the straight-ahead position.
2. Remove the cotter pins and nuts from the ball stud at the steering gear sector shaft arm (3590) and steering tie rod. Remove the ball studs from the linkage using Tie Rod End Remover TOOL-3290-D or equivalent.
3. Loosen the bolts on the tie rod adjusting sleeve clamp (3287) if so equipped. Count the number of turns it takes to remove the steering sector shaft arm drag link from the front wheel spindle tie rod adjusting sleeve (3310).

Installation

1. Install the steering sector shaft arm drag link the same number of turns it took to remove it from the front wheel spindle tie rod adjusting sleeve. Note the position of the tie rod adjusting sleeve clamp. Tighten the adjuster nuts to 40-57 N·m (30-42 lb-ft).
2. NOTE: Make sure the ball studs are seated in the taper to prevent rotation while tightening.

   Install nuts and tighten to 70-100 N·m (51-73 lb-ft).
3. Install new cotter pins.
4. Check toe. Refer to Section 04-00.
5. Check clear vision. Refer to Section 11-00.

Drag Link, Steering Sector Shaft Arm, F-Super Duty Motorhome Chassis

SPECIAL SERVICE TOOL(S) REQUIRED

Description	Tool Number
Pitman Arm Puller	T64P-3590-F

Removal

1. Remove the cotter pins and nuts from the drag link ball studs.
2. Using Pitman Arm Puller T64P-3590-F, remove the drag link ball studs from the steering gear sector shaft arm (3590) and steering arm.

Installation

1. Install the ball studs into steering gear sector shaft arm and steering arm.
2. Install the ball stud nuts. Tighten to 75-105 N·m (55-77 lb-ft). Install new cotter pins through the nuts and ball studs.

Drag Link

Replace the steering sector shaft arm drag link (3304) or tie rod end (3A130) if any of the following conditions are present:

- ball stud loose in socket
- bent
- taper is loose

Replace the front suspension steering ball stud dust seal (3332) if any nicks, cuts or tears are present. Do not attempt to straighten a steering sector shaft arm drag link or tie rod end.

SPECIAL SERVICE TOOL(S) REQUIRED

Description	Tool Number
Pitman Arm Puller	T64P-3590-F

Removal

1. Remove the cotter pins and nuts from the steering sector shaft arm drag link and tie rod ball studs.
2. Using Pitman Arm Puller T64P-3590-F, remove the drag link ball studs from the right-hand front wheel spindle tie rod adjusting sleeve (3310) and steering gear sector shaft arm (3590).
3. Remove the tie rod ball studs from the left-hand front wheel spindle tie rod adjusting sleeve and the steering sector shaft arm drag link.

Installation

1. NOTE: When installing new steering sector shaft arm drag link or tie rod ends or front wheel spindle tie rod adjusting sleeves, turn the parts into the front wheel spindle tie rod adjusting sleeve about the same distance used for the old assembly. Equalize the thread engagement of the short and long tie rod ends in the front wheel spindle tie rod adjusting sleeve. This will provide an approximate toe-in setting.

   Position the drag link ball studs into the right-hand front wheel spindle tie rod adjusting sleeve and the steering gear sector shaft arm. Position the tie rod ball studs into the left-hand front wheel spindle tie rod adjusting sleeve and the steering sector shaft arm drag link.
2. NOTE: Steering linkage must be installed with the steering gear (3504) on center (±45 degrees of power steering gear input shaft and control (3D517)). Ball studs must be seated in tapered hole to prevent rotation while tightening retaining nuts.

   Seat the studs into the tapered hole before tightening the nuts. Tighten the nuts to 70-100 N·m (51-73 lb-ft).
3. Install new cotter pins.

REMOVAL AND INSTALLATION (Continued)

4. Check toe. Refer to Section 04-00.
5. Check clear vision. Refer to Section 11-00.
6. After checking or adjusting toe, center tie rod adjusting sleeve clamp (3287) between locating nibs. Tighten the nuts to 40-57 N·m (30-42 lb-ft).
7. After setting toe, the two bolts and nuts on tie rod adjusting sleeve clamp for the front wheel spindle tie rod adjusting sleeve must be positioned within a limit of 45 degrees (±). As shown in the illustrations, the threaded end of the bolts on the left front wheel spindle tie rod adjusting sleeve points toward the front of the vehicle. The front of the vehicle and the threaded end of the bolts on the right front wheel spindle tie rod adjusting sleeve are facing rearward.

Steering Gear Sector Shaft Arm

CAUTION: Do not attempt to straighten the steering gear sector shaft arm (3590) or any other steering linkage components.

Replace the steering gear sector shaft arm if it is bent. If the steering gear sector shaft arm is bent, also check the drag link, steering tie rod, tie rod adjustment sleeves and tie rod ball studs for signs of damage. Replace damaged steering linkage as required.

SPECIAL SERVICE TOOL(S) REQUIRED

Description	Tool Number
Pitman Arm Puller	T64P-3590-F

Removal

1. Remove the cotter pin and nut from the drag link ball stud at the steering gear sector shaft arm.
2. Disconnect the drag link ball stud from the steering gear sector shaft arm using Pitman Arm Puller T64P-3590-F.

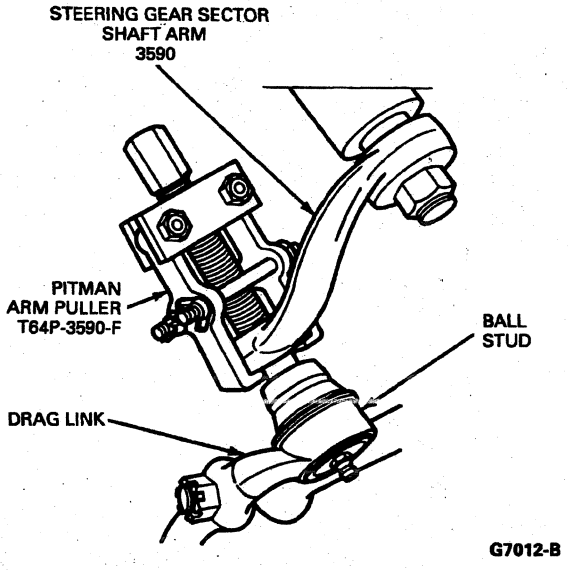

3. Remove nut and washer from the steering gear output sector shaft. On F-Super Duty, remove nut and bolt.
4. Remove the steering gear sector shaft arm from the steering gear output sector shaft using Pitman Arm Puller T64P-3590-F.

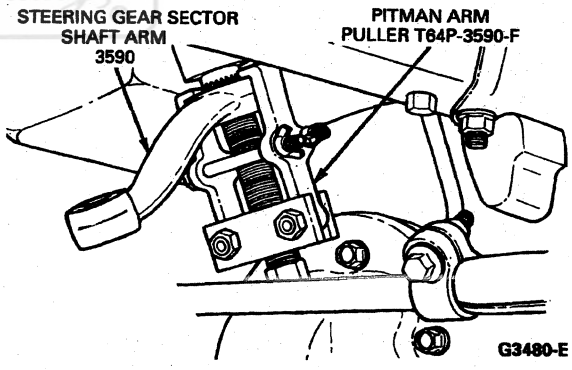

Installation

1. NOTE: Wheels should be in straight-ahead position.

   Install new steering gear sector shaft arm onto output sector shaft. Install retaining washer and nut, and tighten to 230-310 N·m (170-229 lb-ft). Or install nut and bolt, and tighten to 300-400 N·m (220-300 lb-ft).
2. Install the drag link ball stud onto steering gear sector shaft arm. Tighten the nut to 70-100 N·m (51-73 lb-ft) and install the cotter pin.

REMOVAL AND INSTALLATION (Continued)

Spindle/Steering Arm

Removal

1. Remove the spindle connecting rod end ball stud or the drag link ball stud from the spindle or steering arm.
2. Remove the cotter pin and retaining nut from the arm.
3. Remove the arm from the front wheel spindle (3105). Drive tie rod adjusting sleeve (3281) out of front wheel spindle, if necessary.

Installation

1. Install new tie rod adjusting sleeve.
2. NOTE: The spindle hole is slotted to align the front wheel spindle with key. Make sure the key is flush with slot face of tie rod adjusting sleeve.

   Insert the key into slot from the nut side of tie rod adjusting sleeve.
3. Install the arm retaining nut. Tighten to 70-100 N·m (51-73 lb-ft).
4. Install a new cotter pin through the nut and ball stud.
5. Install the spindle connecting rod end ball stud or drag link ball stud in the arm. Install the ball stud nut and tighten to 70-100 N·m (51-73 lb-ft).
6. Install a new cotter pin through the nut and ball stud.
7. Check the toe and adjust, if necessary. Refer to Section 04-00.
8. NOTE: Some spindle arms have fixed steering stops and do not require adjustment.

   Adjust and lock the steering stop adjusting bolts to specification.

SPECIFICATIONS

TORQUE SPECIFICATIONS, F-250 HEAVY DUTY, F-350 AND F-SUPER DUTY CHASSIS CAB

Description	N·m	Lb-Ft
Steering Sector Shaft Arm Idler Arm Rod to Connecting Rod Ball Stud Nut	70-100	51-73
Steering Sector Shaft Arm Idler to Steering Gear Sector Shaft Arm Ball Stud Nut	70-100	51-73
Steering Gear Sector Shaft Arm to Steering Gear Nut	230-310	170-228
Spindle Connecting Rod Tube Nut	40-57	30-42
Spindle Connecting Rod Tube Nuts (F-Super Duty)	81-122	60-90
Front Wheel Spindle Connecting Rod or End to Front Wheel Spindle Ball Stud Nut	60-80	42-59

(Continued)

TORQUE SPECIFICATIONS, F-250 HEAVY DUTY, F-350 AND F-SUPER DUTY CHASSIS CAB (Cont'd)

Description	N·m	Lb-Ft
Nut, Front Wheel Spindle-to-Pitman Arm	78-103	58-76
Tie Rod Adjusting Sleeve Clamp	40-57	30-42
Shock Absorber RH Screw	21-30	15-22
Steering Linkage to Bracket Nut and Washer	21-30	15-22
U-Bolt Nut	24-30	18-22
Steering Linkage Nut to U-Bolt	65-90	48-66
Steering Damper Bracket Nut	115-163	85-120
Steering Damper Nut to Bracket	34-48	25-35

TORQUE SPECIFICATIONS, F-SUPER DUTY MOTORHOME CHASSIS

	N·m	Lb-Ft
Steering Sector Shaft Arm Idler Arm Rods to Steering Arm Castellated Nut	70-100	51-73
Steering Sector Shaft Arm Idler Arm Rod to Steering Gear Sector Shaft Arm Castellated Nut	70-100	51-73
Pitman Arm Retaining Bolt and Nut	300-400	220-300
Steering Connecting Rod Ends to Spindle Arms — Castellated Nut	70-100	51-73
Steering Connecting Rod End Clamp — Bolt and Nut	81-122	60-90
Steering Spindle Arm Stop Bolt	50-70	37-51
Steering Spindle Arm to Steering Linkage Assembly	75-105	55-77
Steering Gear Pitman Arm to Steering Sector Shaft Arm Drag Link	75-105	55-77
Steering Damper Nut	65-90	48-66
U-Bolt Nut	24-30	18-22

SPECIAL SERVICE TOOLS/EQUIPMENT

SPECIAL SERVICE TOOLS REQUIRED

Tool Number/ Description	Illustration
T64P-3590-F Pitman Arm Puller	 T64P-3590-F

SPECIAL SERVICE TOOLS DESIRED

Tool Number	Description
TOOL-3290-D	Tie Rod End Remover

SECTION 11-04 Steering Column

SUBJECT	PAGE
VEHICLE APPLICATION	11-04-1
DESCRIPTION AND OPERATION	
Steering Column	11-04-1
DIAGNOSIS AND TESTING	
Steering Column	11-04-4
REMOVAL AND INSTALLATION	
Ignition Switch	11-04-13
Ignition Switch Lock Cylinder, Lock Cylinder Functional	11-04-12
Ignition Switch Lock Cylinder, Lock Cylinder Non-Functional	11-04-12
Steering Column Tube Bearing, Lower	11-04-11
Steering Column Tube Bearing, Upper	11-04-10
Steering Column, F-250 Heavy Duty, F-350, and F-Super Duty Chassis Cab	11-04-4
Steering Column, F-Super Duty Motorhome	11-04-6
REMOVAL AND INSTALLATION (Cont'd.)	
Steering Shaft, Intermediate, F-250 Heavy Duty and F-350	11-04-9
Steering Shaft, Intermediate, F-Super Duty Chassis Cab and Motorhome	11-04-10
Steering Wheel	11-04-4
Tilt Wheel Handle and Shank	11-04-12
DISASSEMBLY AND ASSEMBLY	
Steering Column	11-04-13
ADJUSTMENTS	
Steering Column Alignment	11-04-21
Transmission Range Indicator	11-04-21
SPECIFICATIONS	11-04-22
SPECIAL SERVICE TOOLS/EQUIPMENT	11-04-22

VEHICLE APPLICATION

F-250 Heavy Duty, F-350, F-Super Duty Chassis Cab and Motorhome Chassis

Official Licensed Product
Ford Motor Company

DESCRIPTION AND OPERATION

Steering Column

NOTE: All fasteners are important in that they could affect the performance of vital parts and systems, or could result in major service expenses. They must be replaced with fasteners of the same part number if replacement becomes necessary. Do not use a replacement part of lesser quality or substitute design. Torque values must be used as specified during assembly to ensure proper functioning of these parts.

The structural part of the steering column is made of magnesium die castings. The steering column is attached to a support that is an integral part of the instrument panel. For F-Super Duty Motorhome, the steering column is attached to a steering column tube support structure. The lower attachments of the steering column are through a bracket that bends during collapse. The upper attachments are through plastic shear modules that separate from the main casting during collapse. A clip and washer are attached to the shear modules to reduce steering column tube shake and to assist in installation of the steering column to the beam.

A unique shifter mechanism has been installed on the steering column. It has the transmission shift selector position insert (7A216) located away from the shift control selector lever and interacts with the shift control selector lever through a linkage system. This system provides a positive interlock with no adjustments required.

DESCRIPTION AND OPERATION (Continued)

Steering Column, Column Shift, Tilt, Disassembled View

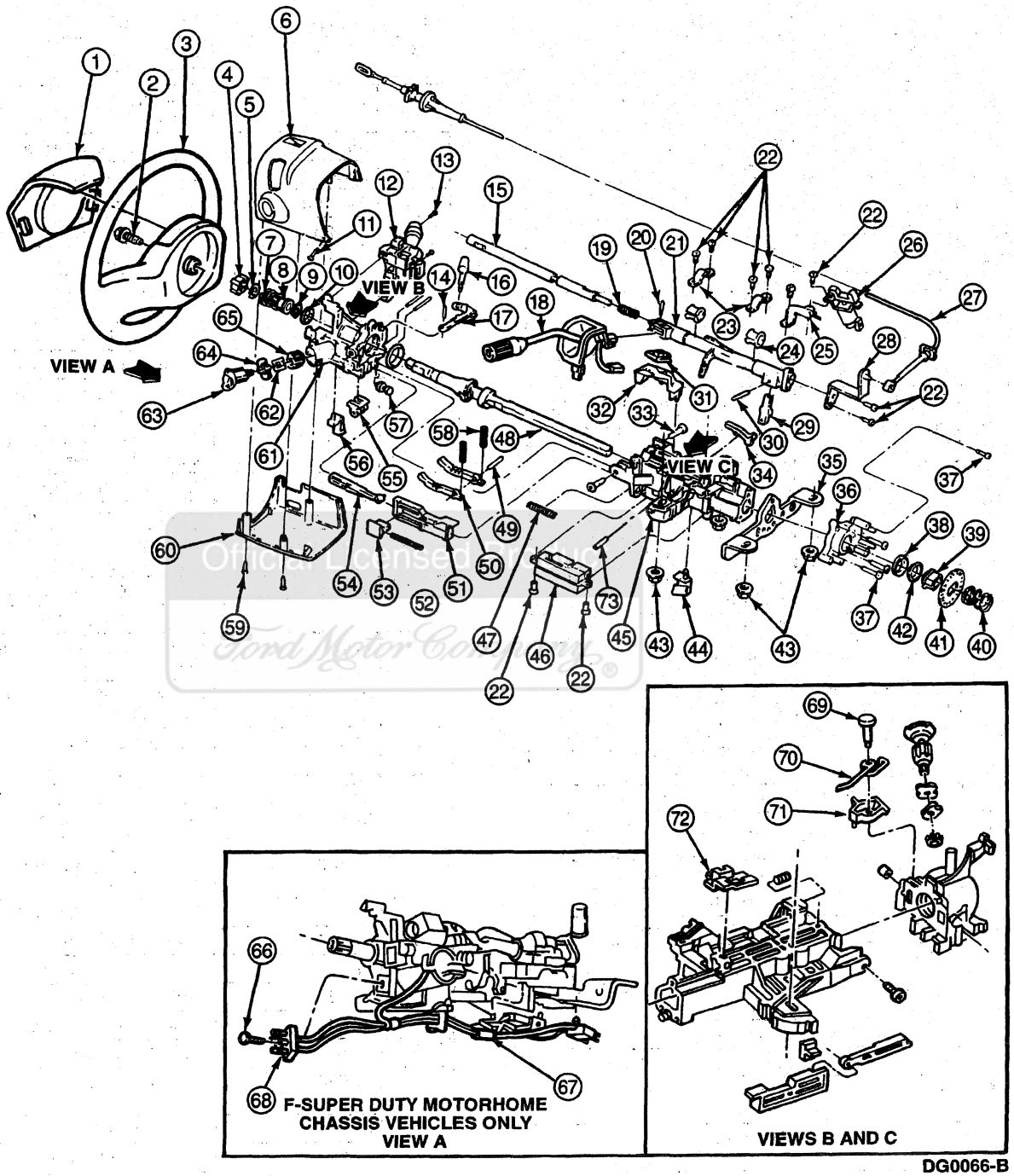

Item	Part Number	Description
1	13A805	Steering Wheel Pad Horn Switch
2	N804385-S100	Steering Wheel Bolt
3	3600	Steering Wheel

(Continued)

Item	Part Number	Description
4	13318	Turn Indicator Cancel Cam
5	3C610	Bearing Retainer
6	3530	Steering Column Shroud

(Continued)

DESCRIPTION AND OPERATION (Continued)

Item	Part Number	Description
7	3520	Steering Column Upper Bearing Spring
8	3518	Steering Column Bearing Sleeve
9	3L539	Steering Column Bearing Tolerance Ring
10	3517	Steering Column Bearing
11	55929-S2	Shroud Retaining Screws
12	13K359	Multi-Function Switch
13	390345-S36	Screw
14	N805857	Steering Column Lock Actuator Lever Pin
15	7361	Column Shift Selector Lever Plunger
16	3F609	Tilt Wheel Handle and Shank
17	3D544	Steering Column Release Lever
18	7210	Gearshift Lever
19	7379	Gearshift Selector Tube Spring
20	7G357	Gearshift Lever Pin
21	7212	Transmission Column Shift Selector Tube
22	N806584	Screws
23	7E400	Gearshift Tube Bushing Clamp
24	7335	Gearshift Lever Socket Bushing
25	7A216	Transmission Shift Selector Position Insert
26	3F752	Shift Lock Actuator
27	7E395	Shift Cable and Bracket
28	7302	Transmission Selector Lever Arm and Support
29	7210	Gearshift Lever
30	7W441	Gearshift Lever Pin
31	7C464	Transmission Control Selector Lever Spring Clip
32	14A099	Wiring Shield
33	N806582	Pivot Bolts
34	3E691	Steering Column Lock Pawl
35	3676	Steering Column Instrument Panel Bracket
36	3D681	Steering Column Lower Bearing Retainer
37	N806583	Screws
38	3518	Steering Column Bearing Sleeve
39	3L539	Steering Column Bearing Tolerance Ring

(Continued)

Item	Part Number	Description
40	3C674	Steering Column Lower Bearing Spring
41	3C131	Suspension Height Sensor Control Ring
42	3517	Steering Column Bearing
43	N806423	Lower Column Mounting Nuts
44	14A163	Wiring Harness Retainer
45	3F723	Steering Actuator Housing
46	11572	Ignition Switch
47	3D655	Steering Column Position Spring
48	3D657	Steering Shaft Assy
49	N808136	Steering Column Lock
50	3D653	Steering Column Lock Left Hand Lever
51	3E715	Steering Column Lock Lever Actuator, Lower
52	3E696	Steering Column Lock Spring
53	3E691	Steering Column Lock Pawl
54	3E715	Steering Column Lock Lever Actuator, Upper
55	3E695	Steering Column Lock Cam
56	14A163	Wiring Harness Retainer
57	3D656	Steering Column Tilt Flange Bumper
58	3B768	Steering Column Position Lock Spring
59	55929-S2	Steering Column Shroud Screw
60	3530	Steering Column Shroud
61	3511	Steering Column Lock Cylinder Housing
62	3E700	Steering Column Lock Housing Bearing
63	11582	Ignition Switch Lock Cylinder
64	3C610	Bearing Retainer
65	3E717	Steering Column Lock Gear
66	390345-S2	Screw
67	14A163	Wiring Harness Retainer
68	9C899	Speed Control Brush
69	3F530	Steering Column Lock Actuator Lever Pin
70	3F532	Key Release Lever Spring
71	3F527	Steering Column Key Release Lever
72	3E745	Steering Column Lock Actuator Cover
73	3B663	Steering Column Lock Lever Pin

Licensed Product Ford Motor Company

DIAGNOSIS AND TESTING

Steering Column

Refer to Section 11-00.

REMOVAL AND INSTALLATION

Steering Wheel

SPECIAL SERVICE TOOL(S) REQUIRED

Description	Tool Number
Steering Wheel Puller	T67L-3600-A

Removal

1. Center front wheels (1007) to the straight-ahead position.
2. Disconnect the battery ground cable (14301).
3. Unsnap the steering wheel pad horn switch (13A805) from the steering wheel (3600) by grasping the sides of the steering wheel pad horn switch and pulling toward yourself.
4. Disconnect the horn / speed control wire harness connector and remove steering wheel pad horn switch from steering wheel.
5. Remove steering wheel retaining bolt.
6. Install Steering Wheel Puller T67L-3600-A, and remove steering wheel.

Installation

1. Make sure front wheels are in the straight-ahead position.
2. Position steering wheel on steering shaft so the alignment marks are aligned.
3. Install new steering wheel retaining bolt and tighten to 31-45 N·m (23-33 lb-ft).
4. Connect steering wheel pad horn switch horn / speed control wire harness.
5. Position steering wheel pad horn switch over steering wheel and snap into place.
6. NOTE: When the battery (10655) has been disconnected and reconnected, some abnormal drive symptoms may occur while the powertrain control module (PCM)(12A650) relearns its adaptive strategy. The vehicle may need to be driven 16 km (10 miles) or more to relearn the strategy.

   Reconnect the battery ground cable.

Steering Column, F-250 Heavy Duty, F-350, and F-Super Duty Chassis Cab

Removal

NOTE: Make sure front wheels (1007) are in the straight-ahead position.

NOTE: All components of the steering column are assembled with fasteners. They are designed with a thread locking system to prevent loosening due to vibrations associated with normal vehicle operation.

1. Disconnect battery ground cable (14301).
2. Remove steering wheel (3600).
3. Remove right and left lower mouldings from instrument panel by pulling up and snapping out of retainers, if so equipped. On right lower moulding a screw will also have to be removed in order to remove moulding from instrument panel.
4. Remove instrument cluster mask (10890).
5. Remove steering column release lever (3D544) by unscrewing it from steering column.
6. Rotate ignition switch lock cylinder (11582) to RUN position. Using a 1 / 8-inch drift, press retaining pin of the ignition switch lock cylinder through access hole in lower steering column shroud (3530) and remove ignition switch lock cylinder.
7. **CAUTION: For vehicles with an E4OD transmission (7003), a protective cover (such as a rag) must be placed between the gearshift lever (7210) and steering column shroud opening during steering column shroud removal. This will prevent damage to the shrink wrap on the gearshift lever.**

   Remove four retaining screws from lower steering column shroud and remove upper shroud from column.

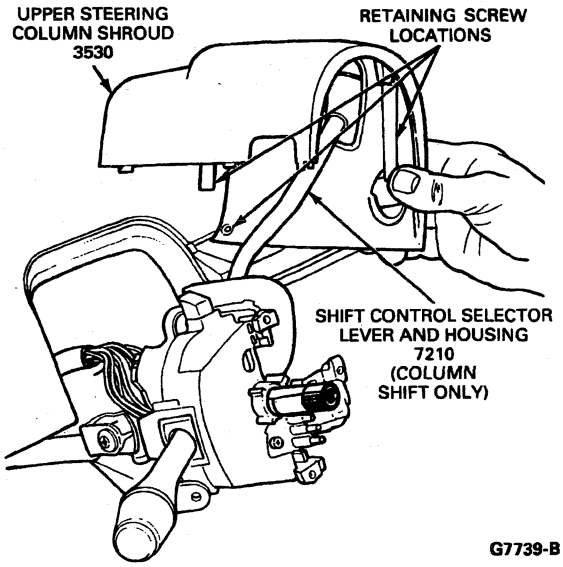

Official Licensed Product
Ford Motor Company

REMOVAL AND INSTALLATION (Continued)

8. Remove six instrument panel reinforcement brace retaining bolts (if so equipped). Remove reinforcement.

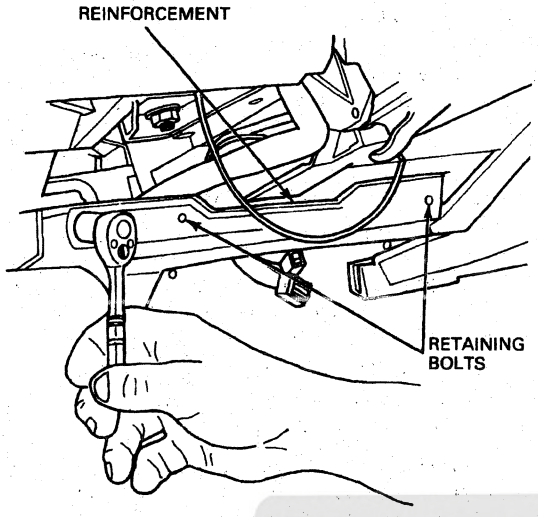

G7649-B

9. Disconnect PRND21 cable from steering actuator housing (3F723) by removing one screw.

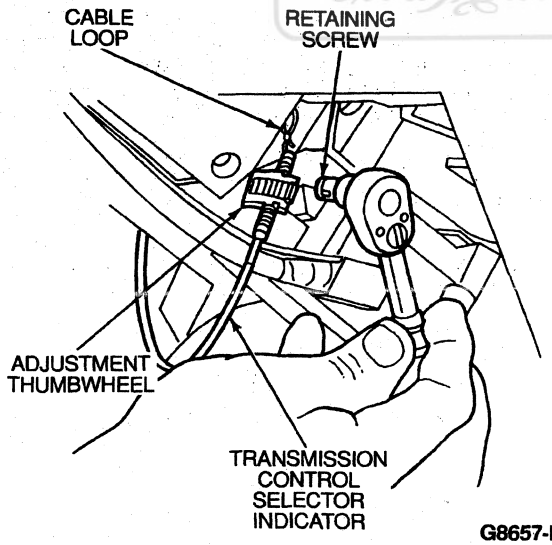

G8657-B

10. Disconnect PRND21 cable loop from shift selector hook.
11. Remove two retaining screws and two electrical connectors from switch. Remove multi-function switch (13K359) from steering column.

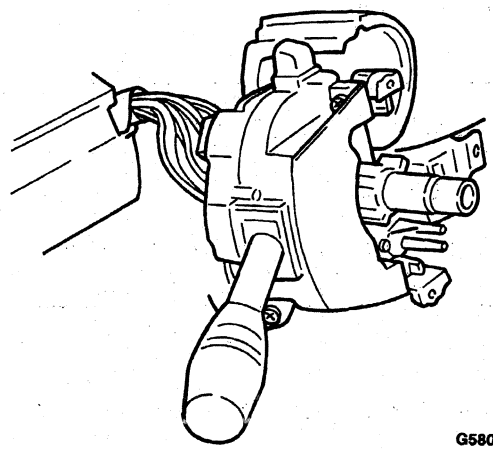

G5809-A

12. Remove pinch bolt from steering shaft flex coupling.
13. Disconnect shift cable from selector lever pivot.
14. Remove shift cable from steering column lower mounting bracket by pushing tab on cable in and sliding cable off bracket.
15. Disconnect ignition switch (11572) by loosening bolt and removing connector. The bolt is part of connector and can not be removed.
16. While supporting steering column, remove four retaining nuts.
17. Disconnect collapsible intermediate shaft from U-joint at lower end of steering column.
18. Remove steering column from vehicle.

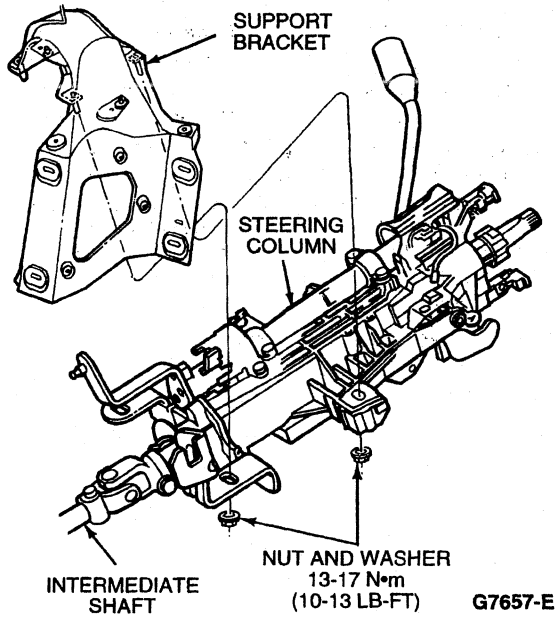

G7657-E

REMOVAL AND INSTALLATION (Continued)

Installation

1. Align steering column lower universal joint to lower shaft. Install one bolt and tighten to 41-57 N·m (30-42 lb-ft).
2. Support steering column to column support bracket. Install four retaining nuts and tighten to 13-17 N·m (10-13 lb-ft).
3. Install shift cable on transmission shift cable bracket (7B229).
4. Snap shift cable onto shift selector pivot ball.
5. Connect two multi-function switch electrical connectors. Position multi-function switch and install two retaining screws. Tighten to 2-3 N·m (18-27 lb-in).
6. Connect all electrical connectors.
7. Attach PRND21 cable loop on shift selector hook, and install steering column lower mounting bracket to steering actuator housing. Install retaining screw and tighten to 7-11 N·m (62-97 lb-in).
8. Install instrument panel reinforcement brace and secure with five retaining bolts. Tighten to 13-19 N·m (10-14 lb-ft).
9. Install upper and lower steering column shrouds.
10. Install instrument cluster mask.
11. Snap right and left lower instrument panel mouldings into place. On right lower moulding a screw will also have to be installed.
12. Install ignition switch lock cylinder as described in this section.
13. Install steering column release lever onto steering column.
14. Install steering wheel onto column shaft. Install a new bolt and tighten to 31-45 N·m (23-33 lb-ft).
15. Position steering wheel pad horn switch (13A805) to steering wheel and snap into place.
16. NOTE: When the battery (10655) has been disconnected and reconnected, some abnormal drive symptoms may occur while the powertrain control module (PCM)(12A650) relearns its adaptive strategy. The vehicle may need to be driven 16 km (10 miles) or more to relearn the strategy.

    Connect battery ground cable.

Steering Column, F-Super Duty Motorhome

Removal

NOTE: Make sure front wheels (1007) are in the straight-ahead position.

NOTE: All steering column components are assembled with fasteners that are designed with a thread locking system to prevent loosening due to vibrations associated with normal vehicle operation.

1. Set parking brake control (2780).
2. Disconnect the battery ground cable (14301).
3. Remove the steering wheel (3600).
4. Remove the steering column position control cover (3D505), if so equipped.
5. Remove the steering column shroud (3530).
6. Remove ignition switch wire connector. Separate connector of multi-function switch (13K359).
7. Remove steering column release lever (3D544) by unscrewing it from steering column.
8. Rotate ignition switch lock cylinder (11582) to RUN position. Using a 1/8-inch drift, press ignition switch lock cylinder retaining pin through access hole and remove ignition switch lock cylinder.

Lower Shroud Removal, F-Super Duty Motorhome

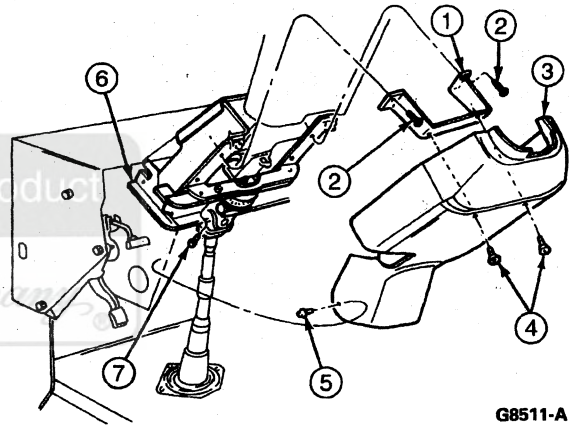

G8511-A

Item	Part Number	Description
1	3R713	Bracket, Steering Column Cover
2	N611194-S2	Screw, M8-1.25x16
3	3D505	Steering Column Position Control Cover
4	56912-S36	Tapping Screw
5	N800322-S36	Screw and Washer Assy
6	7F377	Bracket, Transmission Shift Cable
7	N605772-S2	Bolt

REMOVAL AND INSTALLATION (Continued)

Column Removal, F-Super Duty Motorhome

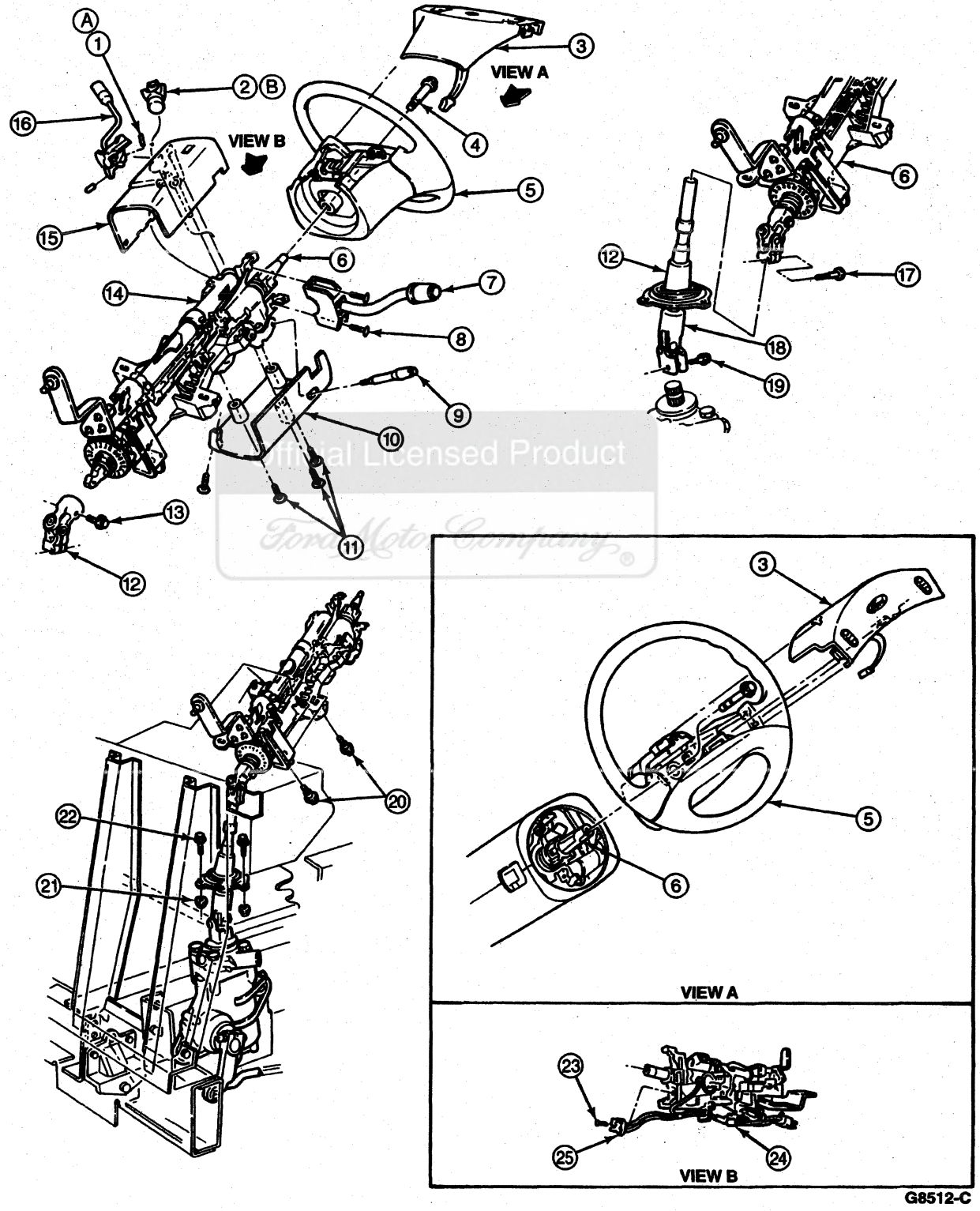

Official Licensed Product
Ford Motor Company

REMOVAL AND INSTALLATION (Continued)

Item	Part Number	Description
1	7G357	Gearshift Lever Pin
2	22050	Lock Cylinder
3	13A805	Steering Wheel Pad Horn Switch
4	N804385-S100	Bolt
5	3600	Steering Wheel
6	3514	Steering Column Tube
7	13K359	Multi-Function Switch
8	390345-S52	Screw
9	3F609	Tilt Wheel Handle and Shank
10	3530	Steering Column Shroud
11	S5929-S2	Screw
12	3B676	Lower Steering Column Shaft
13	N803942-S100	Bolt
14	3514	Steering Column Tube

(Continued)

Item	Part Number	Description
15	3530	Steering Column Shroud
16	7210	Gearshift Lever
17	N806584-S36	Bolt
18	3B676	Lower Steering Column Shaft
19	N803942-S100	Bolt
20	N605907-S2	Bolt
21	N620481-S2	Nut
22	N602550-S2	Screw and Washer
23	390345-S36	Screw
24	14A163	Wiring Harness Retainer
25	9C899	Speed Control Brush
A	—	Press Until Head Seats
B	—	Lube End of Ignition Switch with Ignition Lock Grease FOAZ-19584-A or equivalent meeting Ford specification ESA-M1C232-A

Official Licensed Product Ford Motor Company

9. Remove four retaining screws from the lower half of the steering column shroud and remove the steering column shrouds.
10. Disconnect PRND21 cable from steering actuator housing (3F723) by removing one screw.
11. Disconnect PRND21 cable loop from shift selector hook.
12. Remove two screws retaining multi-function switch and two electrical connectors from switch.
13. Remove multi-function switch from steering column.
14. Remove pinch bolt from upper intermediate shaft U-joint coupling.
15. Disconnect shift cable from selector lever pivot.
16. Remove shift cable from transmission shift cable bracket (7B229) by pushing tab on cable in and sliding cable off transmission shift cable bracket.
17. While supporting steering column, remove four retaining nuts.
18. Remove steering column tube (3514) from vehicle.

Installation

1. Align steering column center shaft to lower steering column shaft (3B676) and install one bolt. Tighten to 40-56 N·m (30-41 lb-ft).
2. Position steering column on four mounting studs on column support and install four retaining nuts and tighten to 13-17 N·m (10-13 lb-ft).
3. Install shift cable on transmission shift cable bracket.
4. Snap shift cable onto shift selector pivot ball.
5. Connect two electrical connectors of multi-function switch. Position multi-function switch and install two retaining screws. Tighten to 2-3 N·m (18-27 lb-in).
6. Connect all electrical connectors.
7. Attach PRND21 cable loop on shift selector hook, and install transmission shift cable bracket to steering actuator housing. Install retaining screw and tighten to 7-11 N·m (62-97 lb-in).
8. Install upper and lower sections of steering column shroud and install four screws.
9. Install the steering wheel pad horn switch (13A805) if so equipped.
10. Install ignition switch lock cylinder.
11. Install steering column release lever onto steering column tube.
12. Install steering wheel onto steering column shaft. Install new bolt and tighten to 31-45 N·m (23-33 lb-ft).
13. Connect horn blow cover electrical wire connector to mounting boss at steering wheel hub.
14. Position steering wheel pad horn switch to steering wheel and snap into place.
15. NOTE: When the battery (10655) has been disconnected and reconnected, some abnormal drive symptoms may occur while the powertrain control module (PCM)(12A650) relearns its adaptive strategy. The vehicle may need to be driven 16 km (10 miles) or more to relearn the strategy.

    Connect battery ground cable.

REMOVAL AND INSTALLATION (Continued)

Steering Shaft, Intermediate, F-250 Heavy Duty and F-350

Removal

1. **CAUTION: Steering column must be in the locked position.**

   Remove bolt from upper U-joint-to-shaft connection. Collapse intermediate lower shaft.
2. Unclip steering gear shield from gear and slide up shaft.
3. Remove bolt retaining intermediate lower shaft assembly to steering gear input shaft.
4. From inside of engine compartment, remove intermediate lower shaft.

Installation

1. **CAUTION: Be sure to use two new bolts N803942-S100 for reinstallation of intermediate shaft from steering gear to steering column.**

   From inside of engine compartment, install a new bolt from intermediate shaft through boot and to steering gear input shaft. Tighten new bolt to 41-57 N·m (30-42 lb-ft).
2. Slide steering gear shield over coupling and attach to gear.
3. Extend intermediate shaft and insert a new bolt into upper assembly U-joint at end of steering column. Tighten new bolt to 41-57 N·m (30-42 lb-ft).
4. Check steering column for proper operation.

Intermediate Steering Shaft

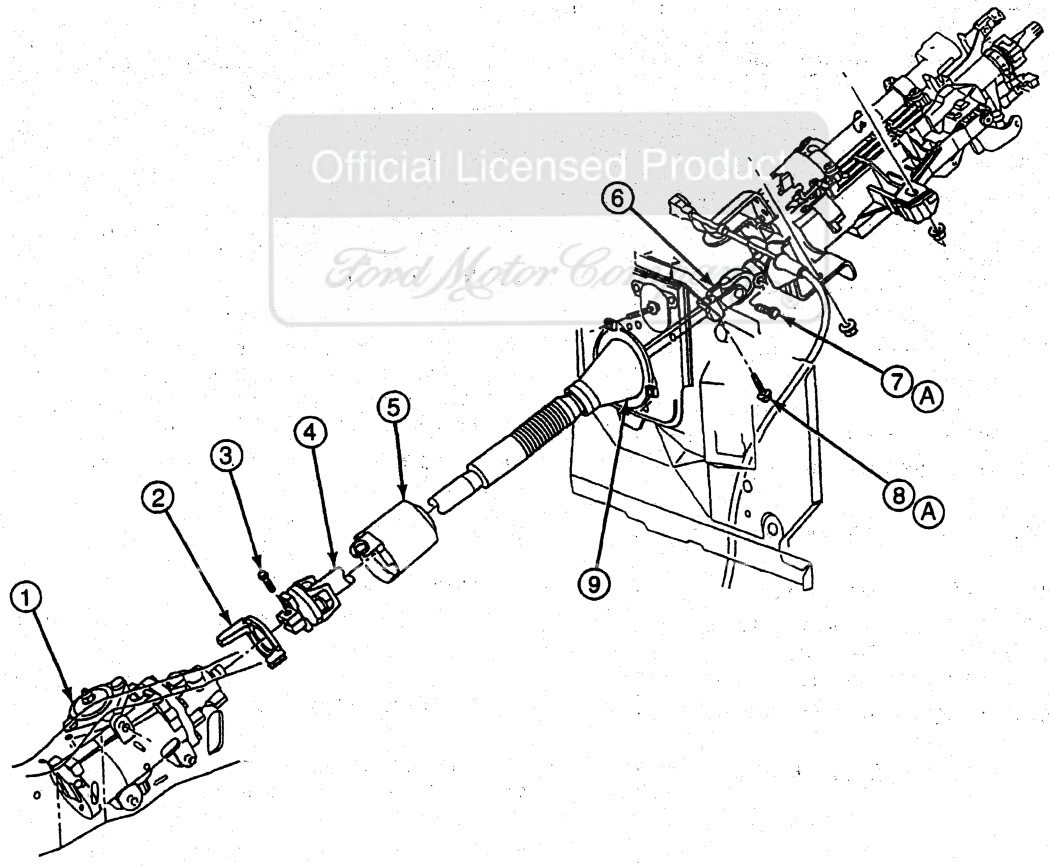

G9055-B

Official Licensed Product
Ford Motor Company

REMOVAL AND INSTALLATION (Continued)

Item	Part Number	Description
1	3504	Steering Gear
2	3F540	Steering Gear Shield (Lower)
3	N803942-S100	Bolt
4	3C662	Lower Steering Column Shaft
5	3F540	Steering Gear Shield (Upper)

(Continued)

Item	Part Number	Description
6	3E751	Intermediate Steering Column
7	N803942-S100	Bolt
8	N803942-S100	Bolt
9	3D677	Seal Assy
A	—	Tighten to 41-57 N·m (30-42 Lb-Ft)

Steering Shaft, Intermediate, F-Super Duty Chassis Cab and Motorhome

Removal

CAUTION: Steering column must be in the locked position.

1. Remove bolt from upper U-joint-to-shaft connection. Collapse intermediate lower shaft.
2. Remove bolt retaining intermediate lower shaft to steering gear input shaft.
3. From inside of engine compartment, remove intermediate lower shaft.

Installation

1. From inside of engine compartment, install intermediate shaft through boot and to steering gear input shaft. Tighten bolt to 41-57 N·m (30-42 lb-ft).
2. Extend shaft and insert into upper assembly U-joint at end of steering column. Tighten bolt to 41-57 N·m (30-42 lb-ft).
3. Check steering column for proper operation.

Steering Column Tube Bearing, Upper

Removal

1. Remove lock cylinder housing.
2. Set housing flat on workbench and tap steering column bearing loose with suitable drift and a plastic hammer.

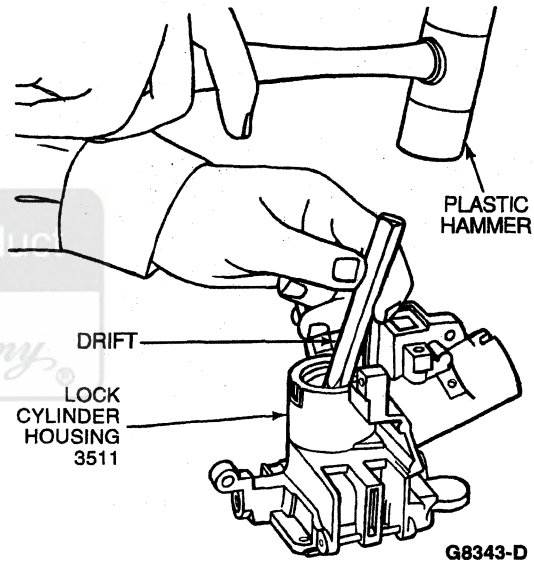

Installation

1. Support lock cylinder housing on workbench.
2. Position steering column bearing so that the inner race will face up (inner race fully visible in up position), or out from lock cylinder housing, when installed.

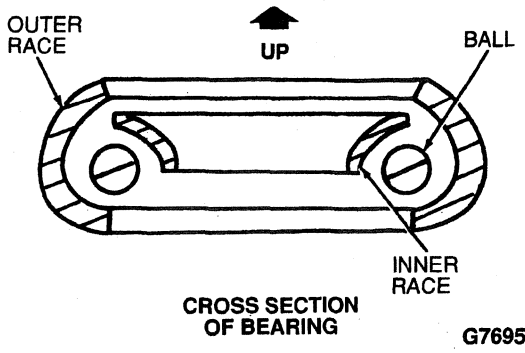

Official Licensed Product
Ford Motor Company

REMOVAL AND INSTALLATION (Continued)

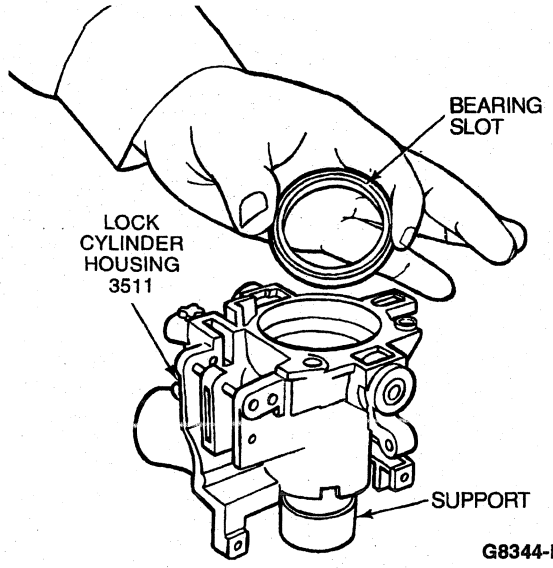

3. Using a socket or bushing driver the same size as outer race of steering column bearing, tap steering column bearing into housing with a plastic hammer until fully seated.

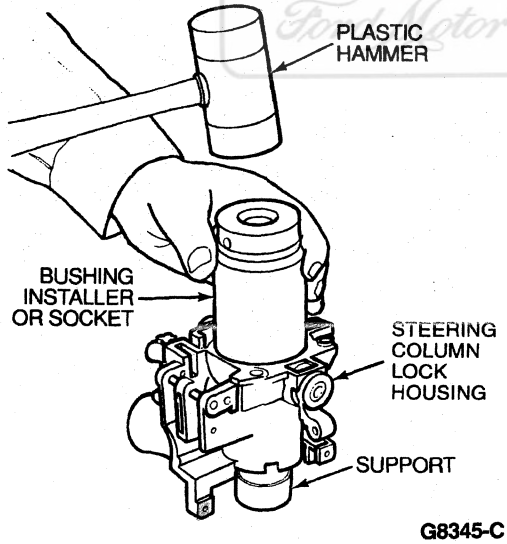

Steering Column Tube Bearing, Lower

Removal

1. Support steering actuator housing (3F723) on workbench.
2. Remove steering column bearing (3517) and steering column bearing sleeve (3518) from steering column lower bearing retainer (3D681) by hand.

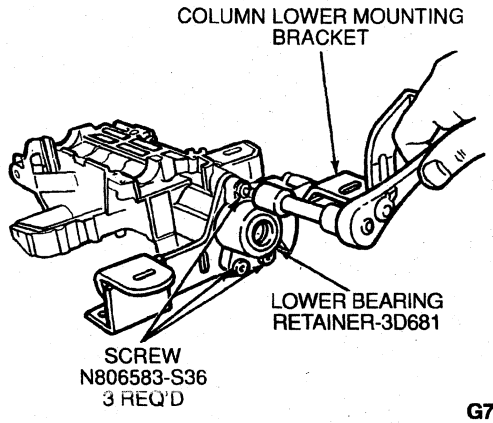

Installation

1. Inspect steering column bearing sleeve. Replace if damaged.

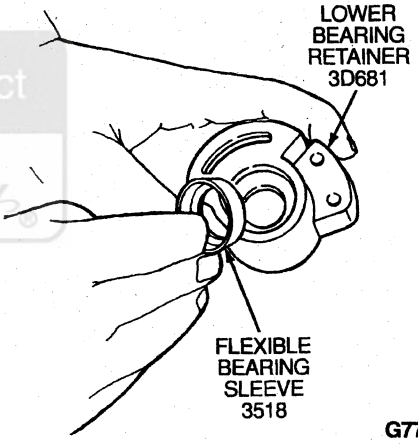

2. Position steering column bearing sleeve in housing.

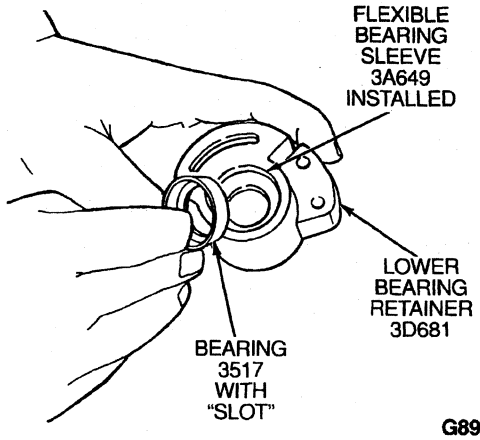

Ford Motor Company Official Licensed Product

REMOVAL AND INSTALLATION (Continued)

3. Press in the new steering column bearing with thumb pressure until seated. Inner race should face down (inner race should be fully visible when steering column lower bearing retainer is installed on steering column) when installed in the vehicle.
4. Install bearing housing on steering column tube (3514).

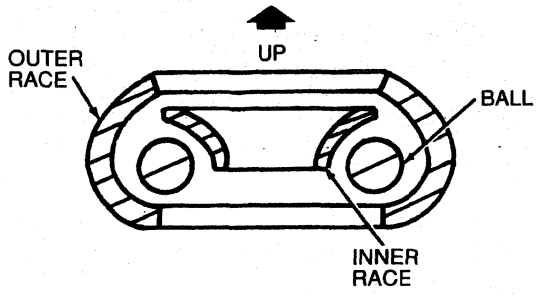

CROSS SECTION OF BEARING G7694-A

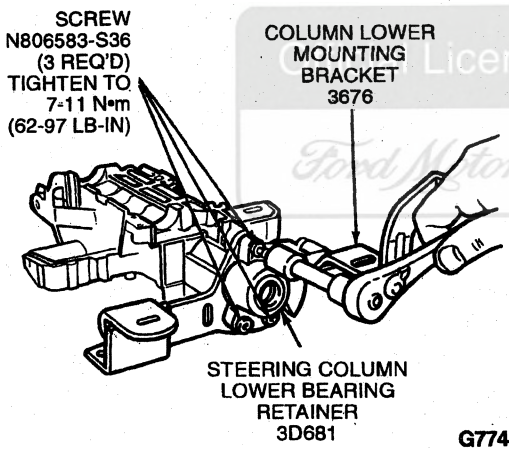

G7744-D

Tilt Wheel Handle and Shank

Removal

1. Rotate tilt wheel handle and shank counterclockwise.

Installation

1. Position tilt wheel handle and shank, and rotate clockwise until tight.

Ignition Switch Lock Cylinder, Lock Cylinder Functional

NOTE: The following procedure applies to vehicles that have functional lock cylinders and keys. If key numbers are known, the proper key can be made.

Removal

1. Disconnect battery ground cable (14301).
2. Turn lock cylinder key to RUN position.
3. Place a 3.17-mm (1/8-inch) diameter wire pin or small drift punch in hole in steering column shroud (3530) under ignition switch lock cylinder (11582). Depress retaining pin while pulling out on ignition switch lock cylinder to remove it from housing of steering column.

Installation

1. Install ignition switch lock cylinder by turning it to RUN position. Insert ignition switch lock cylinder into steering column housing. Make sure ignition switch lock cylinder is fully seated and aligned in interlocking washer before turning key to OFF position. This will permit retaining pin of ignition switch lock cylinder to extend into hole of steering column.
2. Rotate ignition switch lock cylinder, using key, to make sure of correct mechanical operation in all positions.
3. NOTE: When the battery (10655) has been disconnected and reconnected, some abnormal drive symptoms may occur while the powertrain control module (PCM)(12A650) relearns its adaptive strategy. The vehicle may need to be driven 16 km (10 miles) or more to relearn the strategy.

   Connect battery ground cable.

Ignition Switch Lock Cylinder, Lock Cylinder Non-Functional

Removal

NOTE: The following procedure applies to vehicles in which the ignition lock is inoperative and the lock cylinder cannot be rotated due to a lost or broken key, unknown key number, or a cap that has been damaged or broken to the extent that the lock cylinder cannot be rotated.

1. Disconnect battery ground cable (14301).
2. Remove steering wheel (3600).
3. Using channel lock pliers or vise grip pliers, twist cap until it separates from the ignition switch lock cylinder (11582).
4. Using a 3/8-inch diameter drill, drill down middle of ignition lock key slot approximately 44 mm (1-3/4 inch) until ignition switch lock cylinder breaks loose from breakaway base of ignition switch lock cylinder. Remove ignition switch lock cylinder and drill shavings from lock cylinder housing.

Ford Licensed Product
Ford Motor Company

REMOVAL AND INSTALLATION (Continued)

5. Remove retainer, bearing and gear. Thoroughly clean all drill shavings and other foreign materials from casting.
6. Carefully inspect lock cylinder housing for damage from the above operation. If damage is apparent, lock cylinder housing must be replaced.

Installation

1. Replace lock cylinder housing, if damaged.
2. Install gear, bearing and retainer.
3. Install trim and electrical parts.
4. Install new ignition switch lock cylinder.
5. Install steering wheel.
6. NOTE: When the battery (10655) has been disconnected and reconnected, some abnormal drive symptoms may occur while the powertrain control module (PCM)(12A650) relearns its adaptive strategy. The vehicle may need to be driven 16 km (10 miles) or more to relearn the strategy.

   Connect battery ground cable.
7. Check operation of lock cylinder.

Ignition Switch

Refer to Ignition Switch Lock Cylinder, Lock Cylinder Functional, and Ignition Switch Lock Cylinder, Lock Cylinder Non-Functional, in the Removal and Installation portion of this section.

DISASSEMBLY AND ASSEMBLY

Steering Column

Disassembly

1. Disconnect battery ground cable (14301).
2. Remove horn pad and steering wheel (3600).
3. Remove steering column from vehicle.
4. Remove lower U-joint, spring sensor ring and tolerance ring.

Column Shift

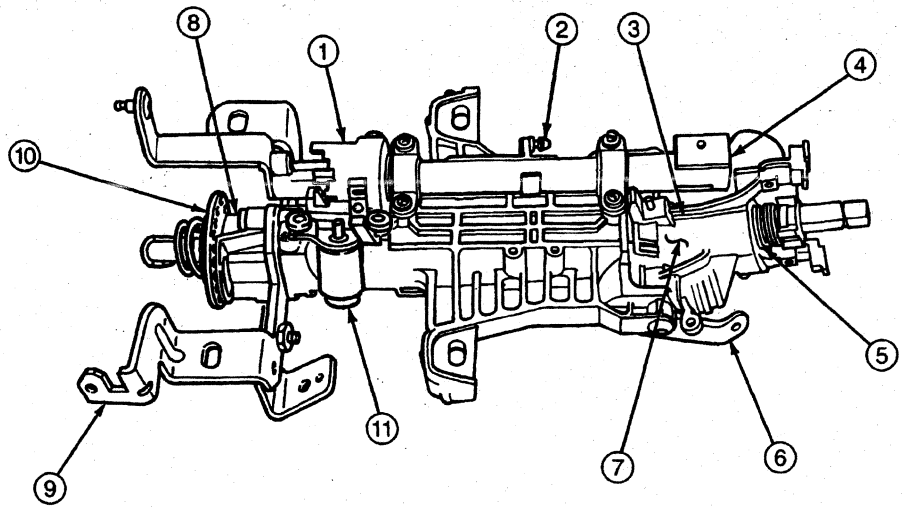

G7745-B

Official Licensed Product
Ford Motor Company

DISASSEMBLY AND ASSEMBLY (Continued)

Item	Part Number	Description
1	7A216	Transmission Shift Selector Position Insert
2	—	Shift Indicator Attaching Point (Part of 7210)
3	3511	Steering Column Lock Cylinder Housing
4	7210	Gearshift Lever
5	3520	Steering Column Upper Bearing Spring
6	3D544	Steering Column Release Lever

(Continued)

Item	Part Number	Description
7	3517	Intermediate Bearing (in Lock Housing)
8	3D681	Steering Column Lower Bearing Retainer
9	3B632	Lower Column Bracket Assy
10	3C131	Suspension Height Sensor Control Ring
11	3F752	Brake / Shift Interlock Solenoid

5. Remove turn indicator cancel cam (13318) by pushing up with flat-bladed screwdriver. Note direction of flush surface.

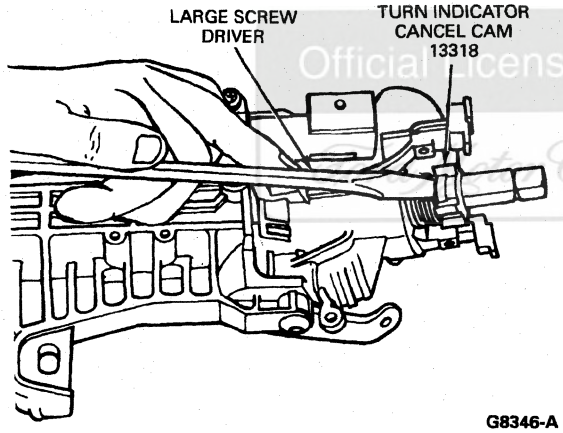

G8346-A

6. Remove bearing retainer (3C610) and steering column upper bearing spring (3520).

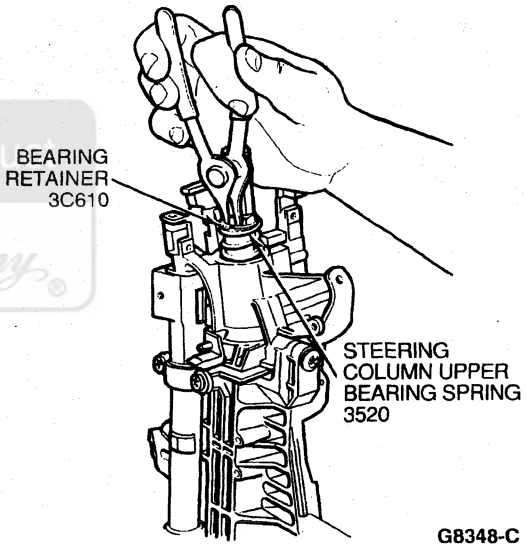

G8348-C

7. Remove steering column bearing sleeve (3518) and steering column bearing tolerance ring (3L539).
8. Remove ignition switch (11572).

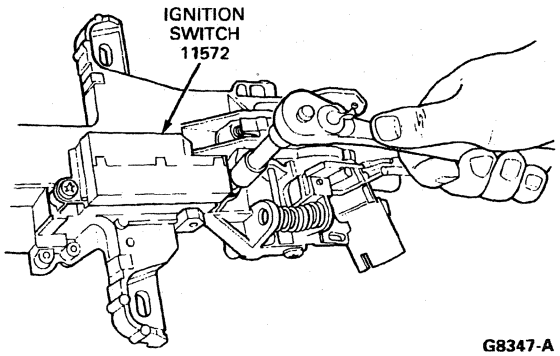

G8347-A

Official Licensed Product Ford Motor Company

DISASSEMBLY AND ASSEMBLY (Continued)

9. Remove shift lock actuator retaining screws and remove shift lock actuator.

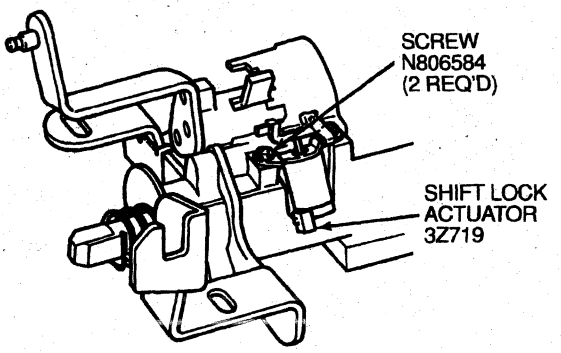

G7884-C

10. Remove transmission column shift selector tube (7212) and transmission shift selector position insert (7A216) (column shift only).

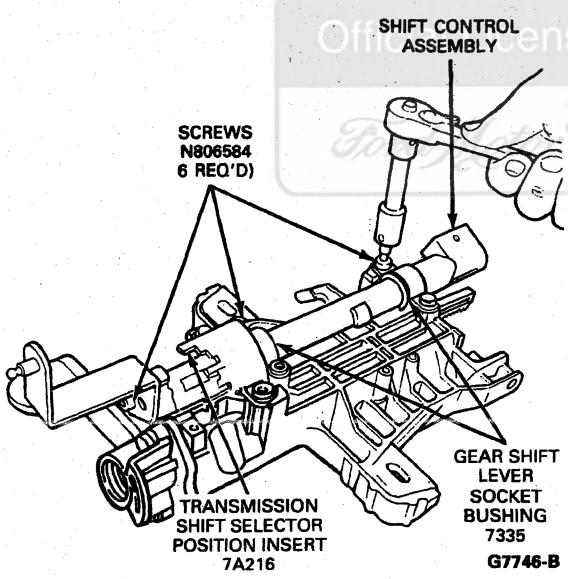

G7746-B

11. Using a drift, tap steering column lock lever pin (3B663) loose. Remove steering column lock lever pin with diagonal pliers. Remove steering column lock pawl (3E691).

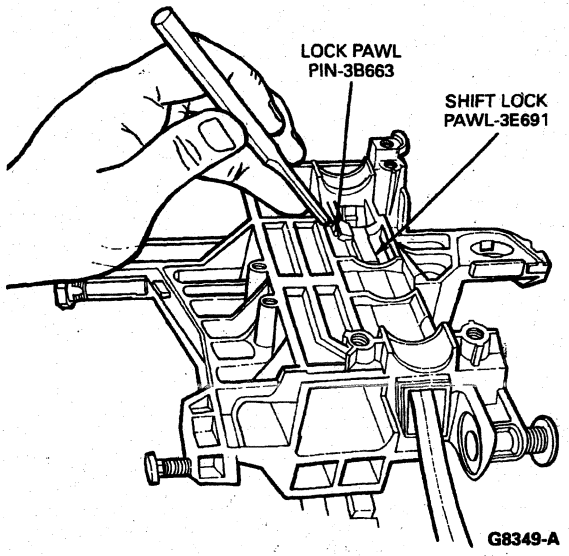

G8349-A

12. Remove plastic bearing retainer from lock cylinder housing bore.

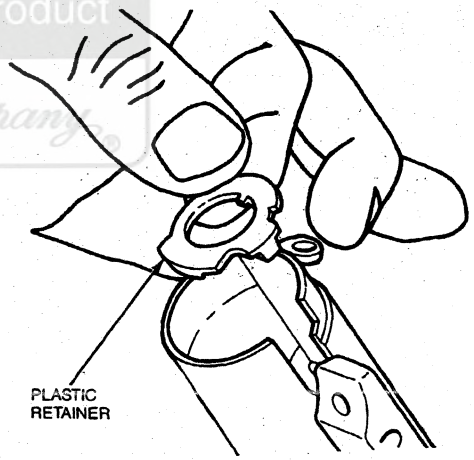

G5447-A

Office Licensed Product
Ford Motor Company

DISASSEMBLY AND ASSEMBLY (Continued)

13. Remove steering column lock housing bearing (3E700) from lock cylinder housing bore.

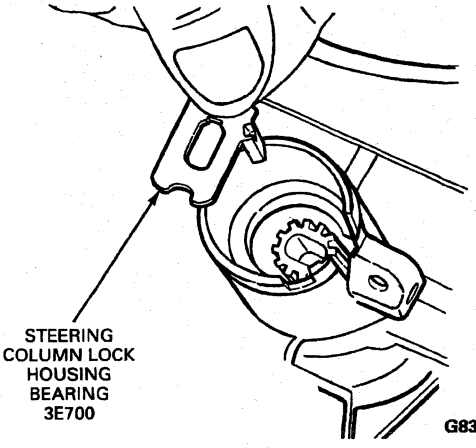

14. Remove steering column lock gear (3E717).
15. **WARNING: THE STEERING COLUMN POSITION SPRING (3D655) WILL RELEASE WHEN THE PIVOT BOLTS ARE REMOVED.**

    Remove two pivot bolts. Use caution as steering column position spring will release when bolts are removed. Remove steering column lock cylinder housing (3511).

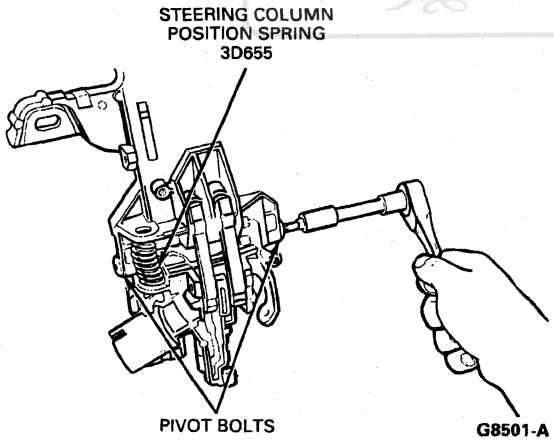

16. Remove steering shaft from steering column.
17. Remove steering column lock lever actuator (3E715).

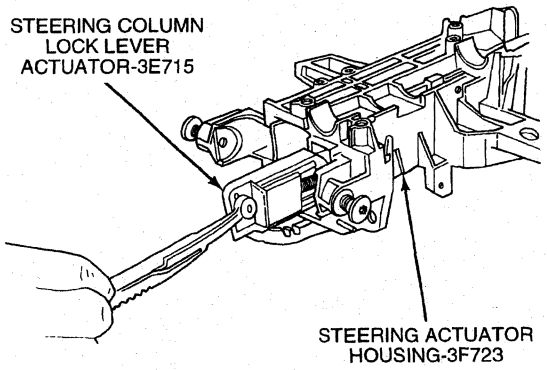

18. Remove steering column lower bearing retainer (3D681) and steering column lower mounting bracket.

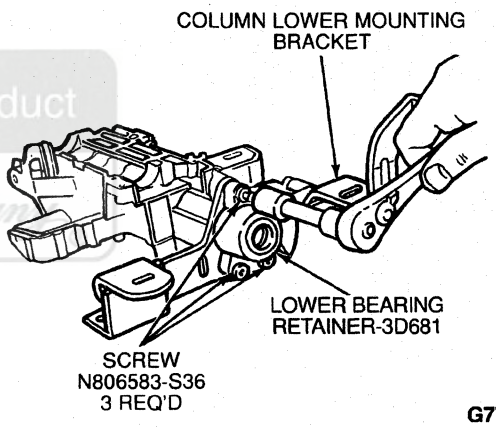

19. Remove tilt lock lever pivot pin using a drift. Remove steering column locking levers and springs.

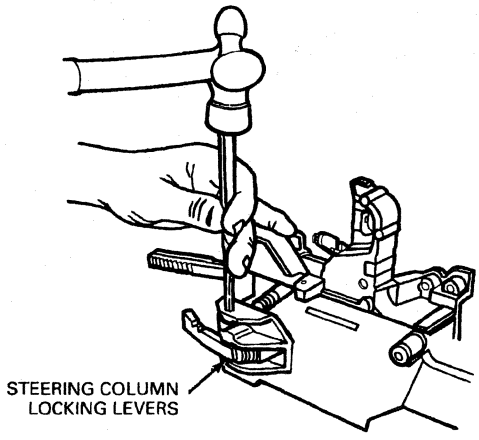

Ford Motor Company Proprietary Product

DISASSEMBLY AND ASSEMBLY (Continued)

Assembly

1. Install steering shaft into steering actuator housing (3F723).
2. Install steering column lower bearing retainer and steering column lower mounting bracket. Tighten screws to 7-11 N·m (62-97 lb-in).

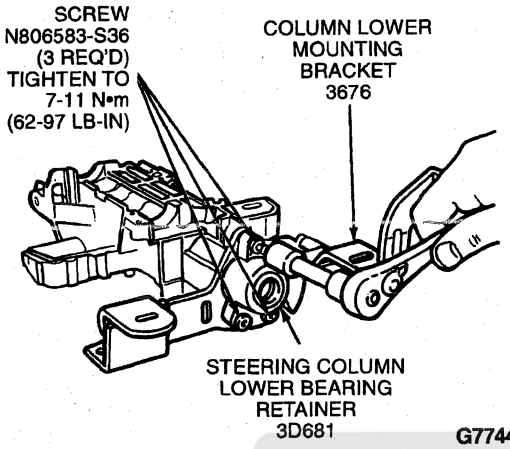

G7744-D

3. Install sensor ring, tolerance ring and spring to steering shaft.

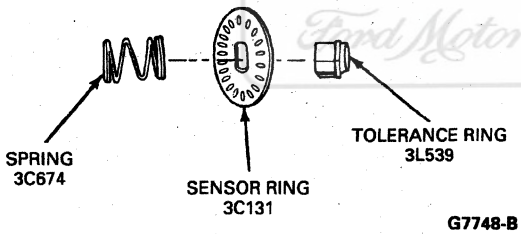

G7748-B

4. Lubricate steering column lock actuators with Ignition Lock Grease FOAZ-19584-A or equivalent meeting Ford specification ESA-M1C232-A prior to installation. Position steering column lock actuators in steering actuator housing.
5. Position steering column lock pawl in steering actuator housing and install steering lock with small hammer. Tap steering lock pawl pin in until flush with housing.

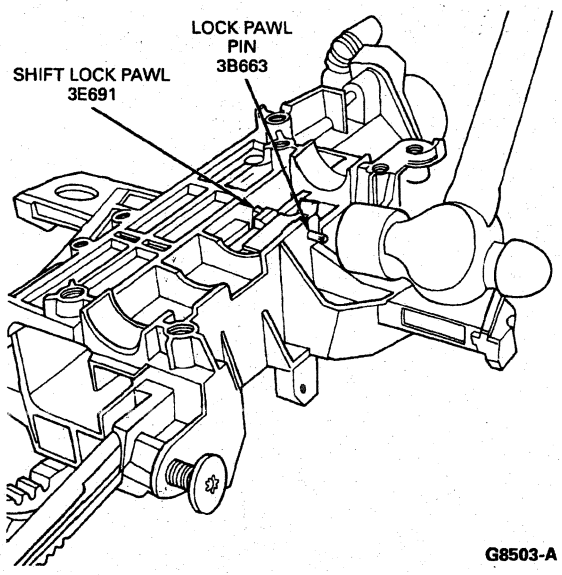

G8503-A

6. Install lock lever spring and lock lever into housing using a drift to hold in place.
7. Install the other lever spring and lock lever with pin. Tap pin into place while driving out drift.

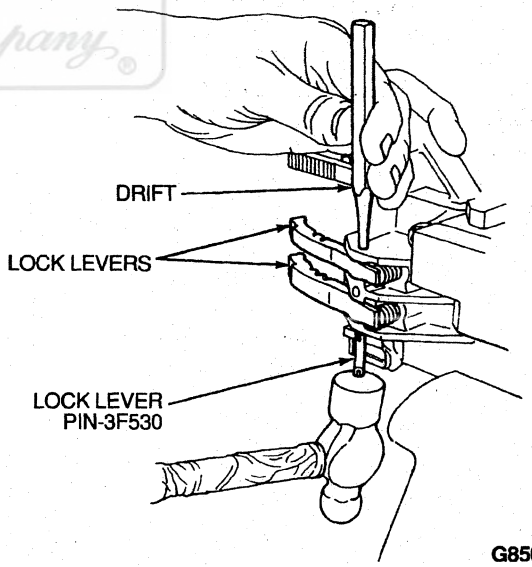

G8504-B

Ford Motor Company

DISASSEMBLY AND ASSEMBLY (Continued)

8. Support steering actuator housing in a vise and drive lock lever pin flush with steering actuator housing.

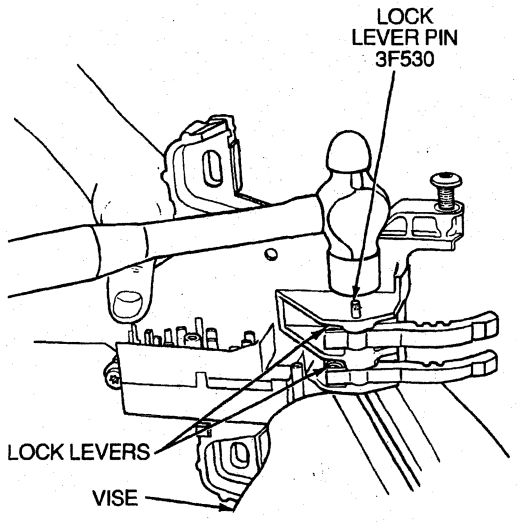

G8505-B

9. Place two nuts or spacers to hold steering column locking levers away from steering actuator housing.

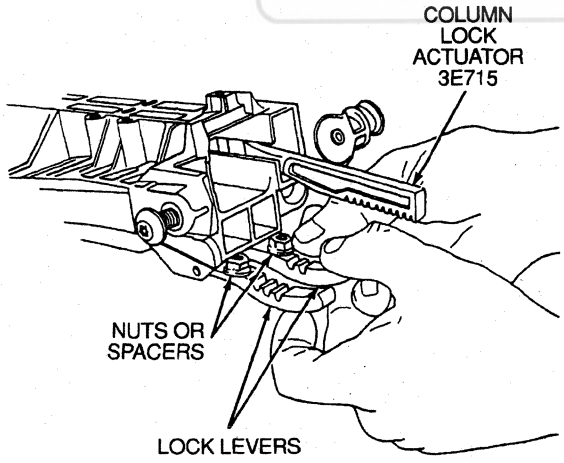

G8506-B

10. NOTE: Lube pivot bolts with Ignition Lock Grease FOAZ-19584-A or equivalent meeting Ford specification ESA-M1C232-A before installing.

Position steering column position spring on steering column lock cylinder housing. With assistant, install steering actuator housing and pivot bolts. Tighten to 18-26 N·m (14-19 lb-ft).

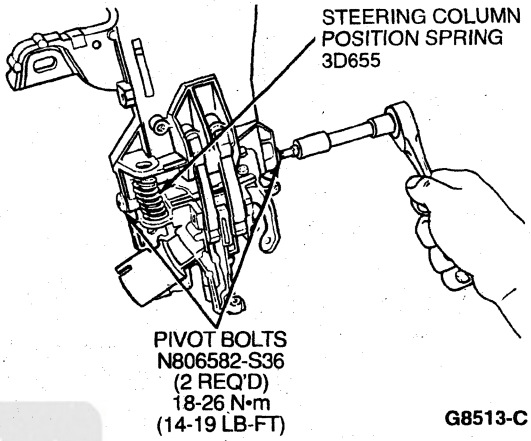

G8513-C

11. Install steering column bearing tolerance ring and steering column bearing sleeve over steering shaft to upper steering column bearing (3517).

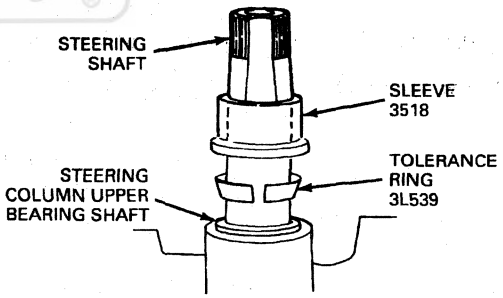

G7877-B

Official Licensed Product
Ford Motor Company

DISASSEMBLY AND ASSEMBLY (Continued)

12. Install steering column upper bearing spring and new bearing retainer on top side of bearing spring using a 3/4-inch I.D. by 2-1/2-inch long PVC pipe.

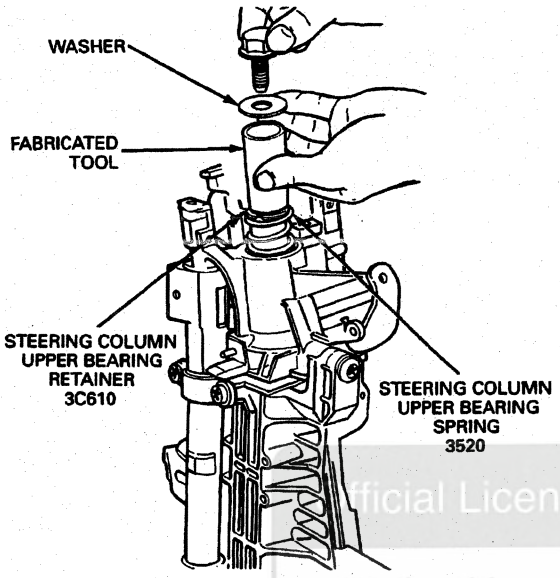

G8507-A

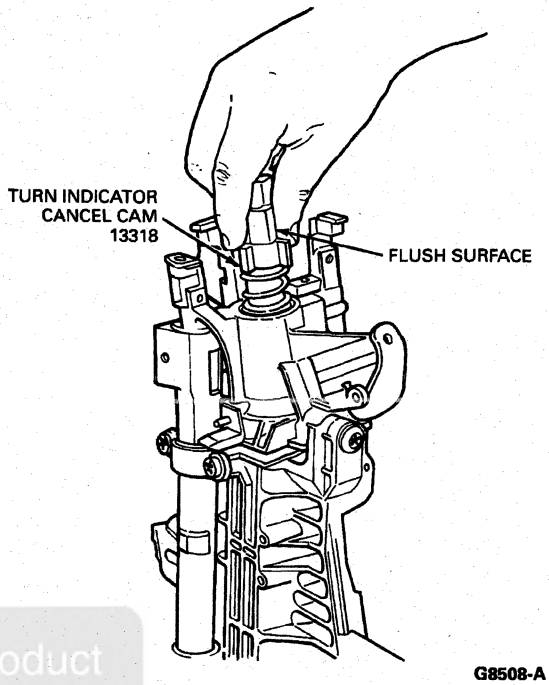

G8508-A

13. Install turn indicator cancel cam, flush surface up.

14. Install ignition switch. Align pin from ignition switch with slot in lock/column assembly. Position slot in lock/column assembly with index mark on casting. Ignition switch must be in RUN position.

Ignition Switch Installation

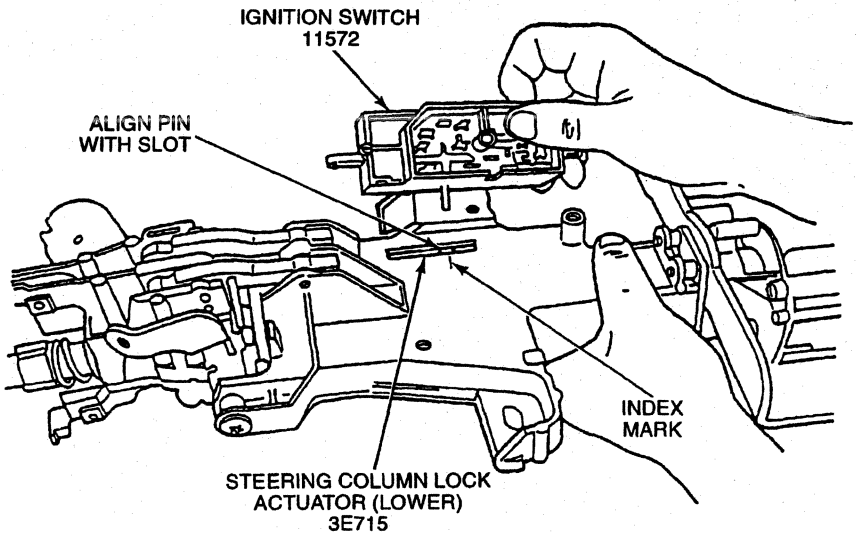

G8509-B

Official Licensed Product
Ford Motor Company

DISASSEMBLY AND ASSEMBLY (Continued)

15. Tighten two retaining screws to 5-7 N·m (44-62 lb-in).

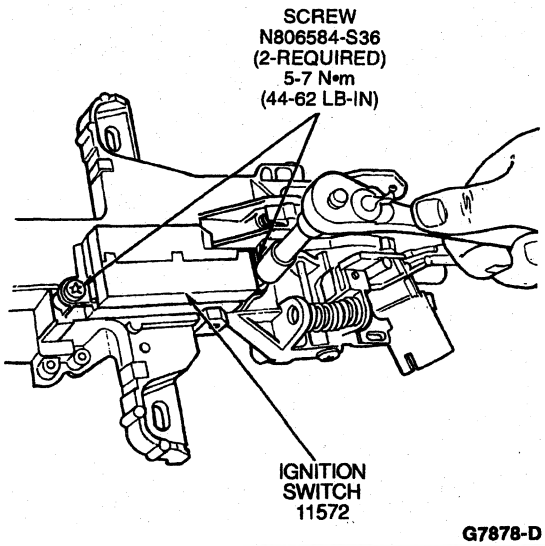

G7878-D

16. Install steering column lock gear. Coat steering column lock gear with Ignition Lock Grease FOAZ-19584-A or equivalent meeting Ford specification ESA-M1C232-A.

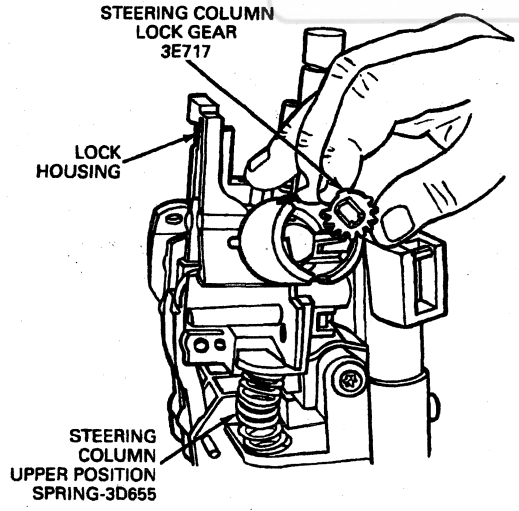

G7879-B

17. Lubricate steering column lock housing bearing. Lubricate with Ignition Lock Grease FOAZ-19584-A or equivalent meeting Ford specification ESA-M1C232-A. With actuator rack in 12 o'clock position, position steering column lock housing bearing with tang inboard and in 5 o'clock position in steering column lock cylinder housing. Insert tip of a screwdriver into double-D slot of steering column lock housing bearing, then turn counterclockwise 90 degrees.

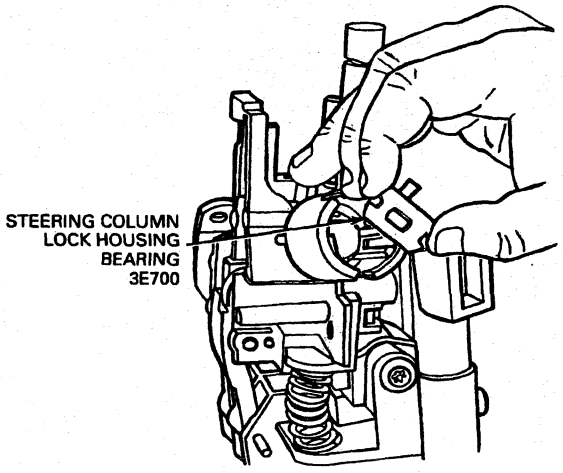

G7880-B

18. Install plastic bearing retainer.

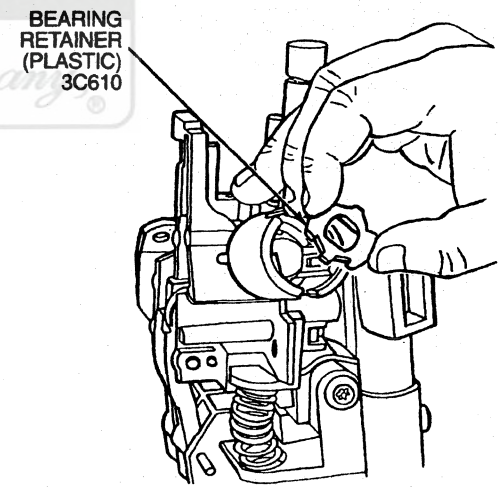

G8658-B

Licensed Product
Ford Motor Company

DISASSEMBLY AND ASSEMBLY (Continued)

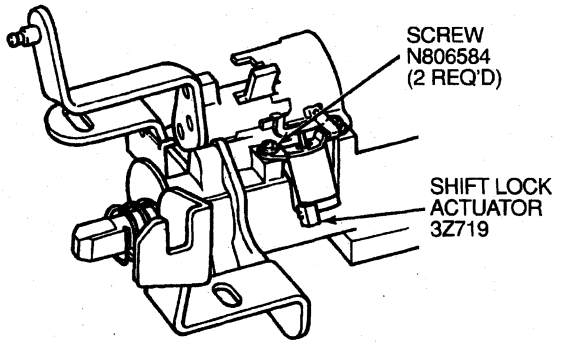

G7884-C

19. Install transmission column shift selector tube (column shift only). Coat gearshift lever socket bushing (7335) with Ignition Lock Grease FOAZ-19584-A or equivalent meeting Ford specification ESA-M1C232-A. Tighten screws to 7-11 N·m (62-97 lb-in).

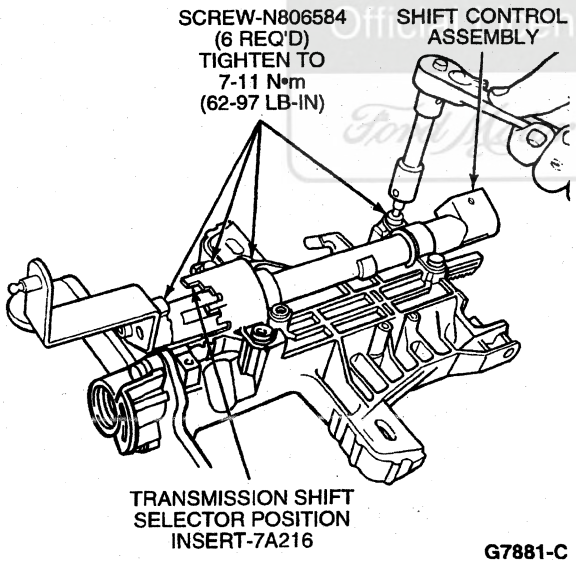

G7881-C

20. Install transmission shift selector position insert and shift lock actuator.
21. Install steering column in vehicle.
22. Install steering wheel.
23. Install horn pad.
24. NOTE: When the battery (10655) has been disconnected and reconnected, some abnormal drive symptoms may occur while the powertrain control module (PCM)(12A650) relearns its adaptive strategy. The vehicle may need to be driven 16 km (10 miles) or more to relearn the strategy.

    Connect battery ground cable.

ADJUSTMENTS

Steering Column Alignment

There is no alignment adjustment of the steering column and coupling shaft. Alignment is maintained by the slip-joint coupling shaft attaching the steering column to the steering gear (3504). If misalignment exists, check for indications of damage, such as bent or displaced components. For proper steering column installation, follow the appropriate Removal and Installation procedure described at the beginning of this section.

Transmission Range Indicator

Use the following procedure to adjust the automatic transmission indicator flag.

1. NOTE: The lower steering column shroud (3530) must be removed.

   Rotate shift control selector lever clockwise until it bottoms out in first gear.
2. Rotate shift control selector lever counterclockwise three detents (overdrive position).
3. Hang a 3-lb. weight on the shift control selector lever.
4. Center pointer in the middle of Ⓓ by rotating the thumbwheel located on right-hand side of steering column actuator housing.

E4OD Transmission Selector

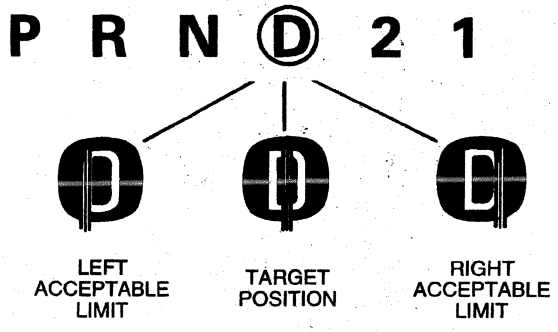

G7647-B

ADJUSTMENTS (Continued)

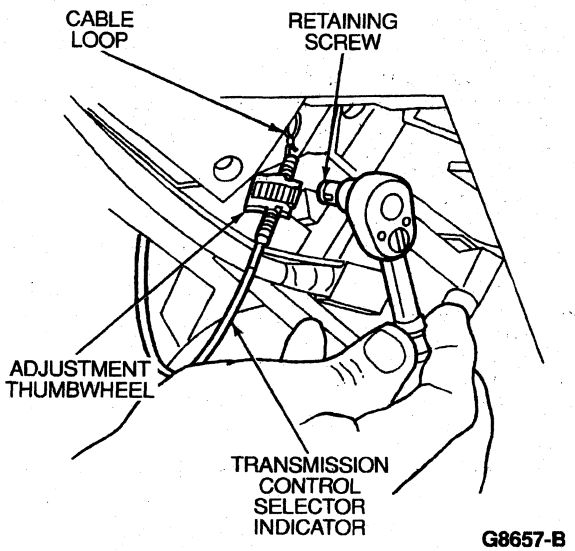

SPECIFICATIONS

LUBRICANT/ADHESIVE/CLEANER SPECIFICATIONS

Description	Part Number	Ford Specification
Ignition Lock Grease	FOAZ-19584-A	ESA-M1C232-A

TORQUE SPECIFICATIONS

Description	N·m	Lb-Ft	Lb-In
Steering Wheel Retaining Bolt	31-45	23-33	—
Steering Shaft Flex Coupling Bolt, F-Super Duty Motorhome	40-56	30-41	—

(Continued)

TORQUE SPECIFICATIONS (Cont'd)

Description	N·m	Lb-Ft	Lb-In
Column Lower Mounting Bracket Bolt	7-11	—	62-97
Ignition Switch Screw	7-11	—	62-97
Shift Control Tube Screw — Column Shift Only	7-11	—	62-97
Intermediate Shaft to Steering Gear Bolt	41-57	30-42	—
Intermediate Shaft to Steering Column Bolt	41-57	30-42	—
Steering Boot Nut	5-7	—	44-62
Lower Column Bearing Bolt	7-11	—	62-97
Steering Column to Instrument Panel Bracket Nuts	13-19	10-14	—
Instrument Panel Reinforcement Brace Bolts	13-19	10-14	—
Steering Actuator Housing Pivot Bolts	18-26	14-19	—

SPECIAL SERVICE TOOLS/EQUIPMENT

SPECIAL SERVICE TOOLS REQUIRED

Tool Number/ Description	Illustration
T67L-3600-A Steering Wheel Puller	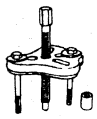 T67L-3600-A

Official Licensed Product Ford Motor Company

SECTION 11-05 Steering Column Switches

SUBJECT	PAGE
VEHICLE APPLICATION	11-05-1
DESCRIPTION AND OPERATION	
Brake-Shift Interlock Switch	11-05-3
Flasher, Indicator	11-05-3
Hazard Flasher Switch	11-05-3
High Beam/Flash-to-Pass Switch	11-05-2
Ignition Switch, Blade-Type	11-05-2
Multi-Function Switch	11-05-1
Transmission Control Switch	11-05-5
Turn Signal Switch	11-05-1
Windshield Washer Switch	11-05-2
Wiper Control Switch	11-05-2
Intermittent	11-05-2
DIAGNOSIS AND TESTING	
Electrical Schematic Reference(s)	11-05-6
Steering Column Switches	11-05-6
DIAGNOSIS AND TESTING (Cont'd.)	
Ignition Switch Continuity Test	11-05-10
Ignition Switch Mechanical Test	11-05-10
Inspection and Verification	11-05-6
Pinpoint Tests	11-05-7
Symptom Chart	11-05-6
REMOVAL AND INSTALLATION	
Brake-Shift Interlock Switch	11-05-12
Ignition Switch	11-05-12
Lockout Switch	11-05-13
Multi-Function Switch	11-05-10
ADJUSTMENTS	
Ignition Switch	11-05-13
SPECIFICATIONS	11-05-13
SPECIAL SERVICE TOOLS/EQUIPMENT	11-05-13

VEHICLE APPLICATION

F-250 Heavy Duty, F-350, F-Super Duty Chassis Cab and Motorhome

Official Licensed Product
Ford Motor Company

DESCRIPTION AND OPERATION

Multi-Function Switch

The multi-function switch (13K359) provides electrical switching for the turn signal, headlamp dimmer, headlamp flash-to-pass, hazard warning, windshield washer and windshield wiper. The integrated switch is mounted to the steering column.

Turn Signal Switch

The turn signal lever is located on the left side of the upper steering column shroud (3530). To operate the turn signal(s), the key must be in the RUN position. To indicate a normal full turn, move the turn signal lever to the end-of-travel position for the turn desired. The turn signal lever will remain in position without effort until the turn is completed, at which time the steering wheel cancel cam will automatically cancel the turn signal.

The turn signal system also has a lane change feature. To operate the lane change feature, move and hold the turn signal lever to the first stop position. When the lane maneuver is completed, release the turn signal lever and it will return to its normal position.

DESCRIPTION AND OPERATION (Continued)

Ignition Switch, Blade-Type

The ignition switch (11572) has blade-type terminals that engage with one ignition key warning switch terminal and wire. The ignition key warning switch terminal and wire is secured to the ignition switch by integral locking fingers.

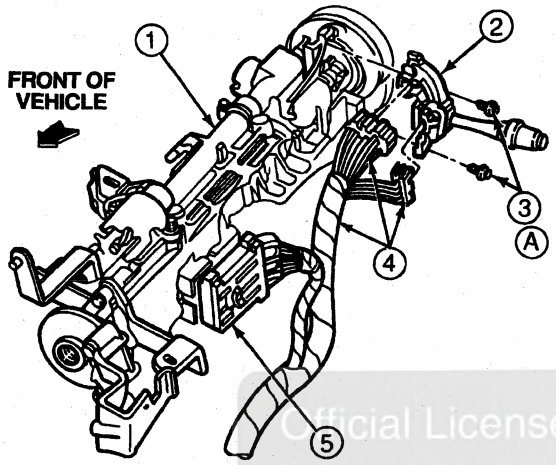

K19799-B

Item	Part Number	Description
1	3514	Steering Column Tube
2	13K359	Multi-Function Switch
3	390345-S36	Screw
4	—	Connector (Part of Main Wiring Harness 14401)
5	—	Connector (Part of Main Wiring Harness 14401)
A	—	Tighten to 2-3 N·m (18-27 Lb-In)

Wiper Control Switch

The wiper control switch is located in the end of the turn signal lever. To operate the windshield wiper, the key must be in the RUN position. In addition to OFF there are two fixed positions, LO (low), HI (high), and an interval position. The positions are selected by rotating the knob actuator. If the interval position is selected, the time between wiper cycles will decrease as the knob is rotated away from OFF, and will increase as the knob is rotated toward OFF. The wiper speed for interval wiper operation is fixed at LO (low) speed setting.

Intermittent

The intermittent wiper control switch, located in the knob at the end of the turn signal lever, operates as follows:

- The key must be in the RUN position to operate wiper.
- In addition to OFF, there are two fixed wiper speed positions, LO and HI, as well as an interval position.
- Positions are selected by rotating the knob actuator relative to the turn signal lever.
- If interval position is selected, the time between wiper cycles will decrease as the knob is rotated away from OFF and increase as the knob is rotated toward OFF.
- The time interval between wipes will vary depending on the knob's position from OFF.
- Wiper speed for interval wiper operation is fixed at the LO speed setting.

Windshield Washer Switch

The washer switch is located at the end of the turn signal lever. To operate the washer, the key must be in the RUN position. To actuate the washer, push the end of the multi-function switch (13K359) in toward the center of the steering column. Releasing the button will then turn off the washer. The windshield wiper blades (17528) will continue to operate for a few wipes and then will automatically return to the wiper speed setting (OFF, LO, HI or INT) previously selected. Washer operation is available in all positions of wiper operation.

High Beam/Flash-to-Pass Switch

The multi-function switch (13K359) also operates the headlamp dimmer switch and the flash-to-pass feature. High beam or Auto-Dim (optional) is selected by moving the turn signal lever away from the driver to the stop. Releasing the lever will maintain high beams or Auto-Dim (optional). Low beam is selected by moving the turn signal lever toward the driver from the high beam position. Releasing the lever will maintain low beams.

To operate the flash-to-pass feature, pull the turn signal lever gently toward the driver. When the turn signal lever is released, it will return to the LO beam position. If driving without headlamps on, use of the flash-to-pass feature will turn on the high beams until the turn signal lever is released. If the headlamps are turned on, the low and high beams will be on until the turn signal lever is released.

NOTE: Excessive force used to hold the turn signal lever in the flash-to-pass function followed by quick release can result in incorrect headlamp dimmer selection of high beam. The driver must be cautioned to avoid this condition.

Official Licensed Product
Ford Motor Company

DESCRIPTION AND OPERATION (Continued)

Hazard Flasher Switch

NOTE: The turn signal system is deactivated when the hazard flasher system is on. Turn signal lever motion does not affect the hazard flasher system.

The hazard flasher system operates independently from the ignition switch (11572). All turn signal lamps can be made to flash in unison by depressing and releasing the hazard actuator located on the top part of the steering column. The switch is identified by a double triangle symbol.

The actuator will move out or away from the steering column tube (3514) to the ON position. The hazard flasher system is turned off by first pushing in the actuator and then releasing the actuator. The actuator should remain in or toward the steering column in the OFF position.

Flasher, Indicator

One flasher unit is used for both the turn signal and the hazard flasher system. Refer to the Electrical and Vacuum Troubleshooting Manual.

Brake-Shift Interlock Switch

The switch prevents moving the shift lever out of PARK position unless brake pedal is depressed.

The brake-shift interlock system consists of an electrical solenoid mounted at the base of the steering column. If the key is in the RUN position, the solenoid runs continually unless the brake is depressed.

SUMMARY OF INTERLOCK OPERATIONAL STATUS

Key Position	Ignition Interlock Shift Lever and Steering Wheel	Brake-Shift Interlock Status
Accessory	Locked	Shift Unlocked — No Power to Solenoid
Locked	Locked	Shift Unlocked — No Power to Solenoid
Off	Unlocked	Shift Unlocked — No Power to Solenoid
Run	Unlocked	Shift Locked (Unless Brake Pedal Is Pressed) — Power to Solenoid

Official Licensed Product Motorcraft Company

DESCRIPTION AND OPERATION (Continued)

Brake-Shift Interlock Switch Location

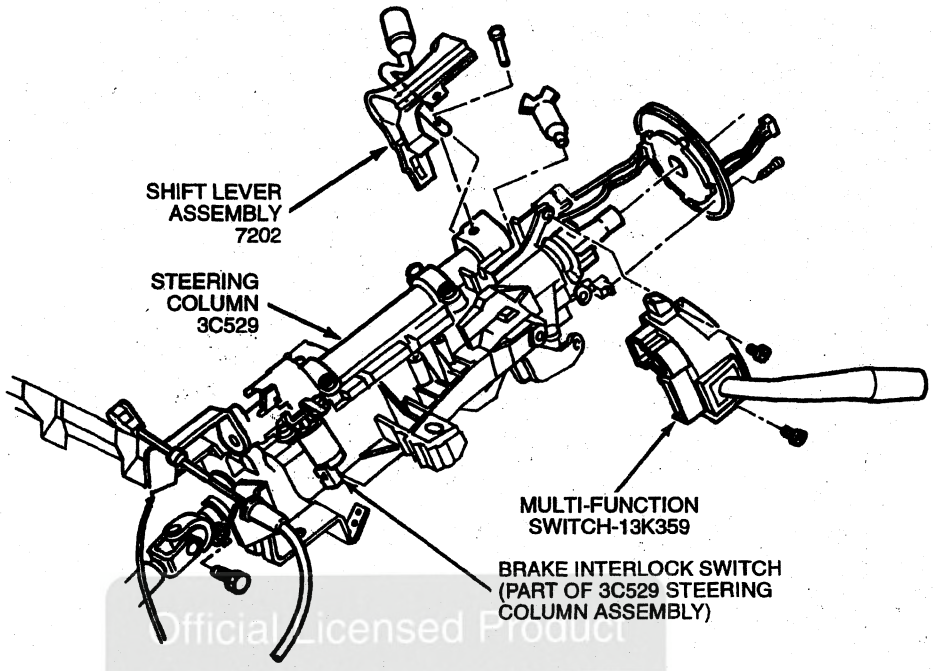

K17034-D

Official Licensed Product
Ford Motor Company

If the brake circuit fuse is blown or the solenoid has shorted internally, the vehicle will not shift from the PARK position even if the ignition is on and brake pedal is pressed. The interlock can be temporarily overridden by the following procedure:

1. Apply parking brake.
2. Remove the ignition key.
3. Insert the ignition key and rotate one position clockwise (ignition off).
4. Shift the selector lever to neutral.
5. NOTE: If the vehicle is shifted into PARK, the above procedure must be repeated.

   Start the vehicle.

DESCRIPTION AND OPERATION (Continued)

Steering Column Switches

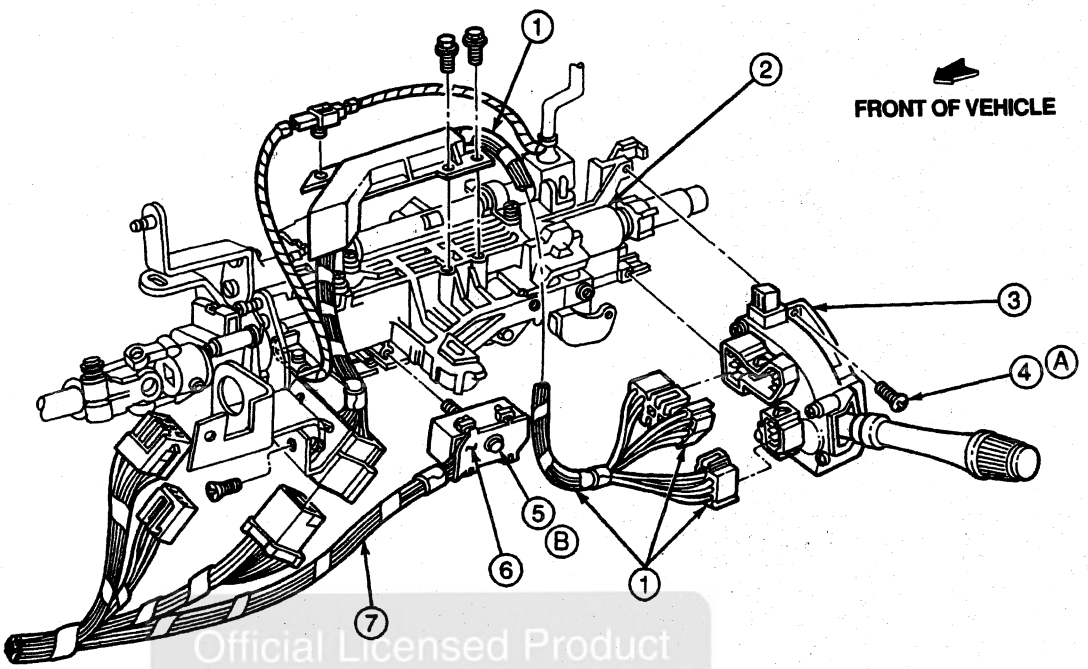

K17047-D

Official Licensed Product
Ford Motor Company

Item	Part Number	Description
1	14A320	Headlamp Dimmer Switch Jumper Wiring
2	3514	Steering Column
3	13K359	Multi-Function Switch
4	390345-S36	Screw
5	—	Captive Bolt (Part of 14A200)

Item	Part Number	Description
6	—	Ignition Switch Connector (Part of 14401)
7	14A200	Wiring to Ignition System
A	—	Tighten to 2-3 N·m (18-27 Lb-In)
B	—	Tighten to 0.8-1.3 N·m (7-12 Lb-In)

(Continued)

Transmission Control Switch

The transmission control switch is located on the end of the gearshift lever (7210). It locks out the overdrive operation of the transmission (7003) and enables full automatic operation through the first three gears.

When the transmission control switch is pushed, the OFF indicator light on the gearshift lever will illuminate and overdrive operation will be disabled. If the transmission control switch is pushed again, overdrive operation will be restored and the indicator light will be off.

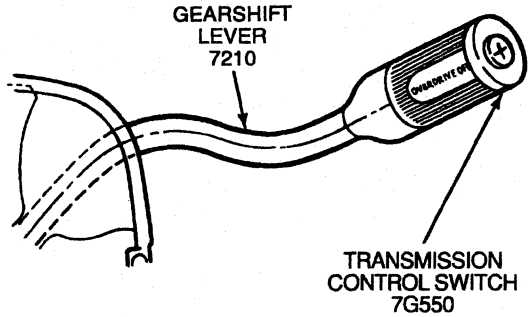

K17051-E

DIAGNOSIS AND TESTING

Electrical Schematic Reference(s)

Refer to Electrical and Vacuum Troubleshooting Manual, Cell 13, Power Distribution for schematic and connector information.

Refer to Electrical and Vacuum Troubleshooting Manual, Cell 81, Interval Wiper/Washer for schematic and connector information.

Refer to Electrical and Vacuum Troubleshooting Manual, Cell 85, Headlamps for schematic and connector information.

Refer to Electrical and Vacuum Troubleshooting Manual, Cell 90, Turn/Stop/Hazard Lamps for schematic and connector information.

Steering Column Switches

Inspection and Verification

1. Verify the customer concern by operating the ignition switch (11572).
2. Visually inspect the ignition switch system, using the chart below.

VISUAL INSPECTION CHART

Mechanical	Electrical
• Binding condition — Key does not turn — Cannot remove key • Damaged release on steering lock • Damaged cable from shift control selector lever	• Blown fuse: — P (50A) — N (50A) — J (20A) • Shorted wire(s) • Damaged connection(s) • Damaged ignition switch

NOTE: If a binding condition occurs, turn the steering wheel (3600) left or right to release the possible load on the ignition switch and verify the ignition key is cut properly.

3. If fault is not visually evident, determine the symptom and proceed to the following symptom chart.

Symptom Chart

NOTE: Use Rotunda 73 Digital Multimeter 105-R0051 or equivalent to perform electrical pinpoint tests.

Ford Licensed Product
Ford Motor Company

IGNITION SWITCH

Condition	Possible Source	Action
• Ignition Switch Inoperative	• Fuse. • Ignition switch. • Circuit. • Battery discharged.	• GO to Pinpoint Test A.
• No Power in ACC Position	• Ignition switch. • Circuit.	• GO to Pinpoint Test B.
• No Power in RUN Position	• Ignition switch. • Circuit.	• GO to Pinpoint Test C.
• No Power in START Position	• Ignition switch. • Circuit.	• GO to Pinpoint Test D.
• Multi-Function Switch Does Not Operate	• Fuse. • Circuits.	• REFER to Section 17-01 to diagnose multi-function switch.
• Turn Signal Switch Inoperative	• Fuse. • Circuit. • Turn signal switch.	• REFER to Section 17-01 to diagnose the turn signals.
• Windshield Wiper Switch Inoperative	• Fuse. • Circuit. • Windshield wiper switch.	• REFER to Section 01-16 to diagnose the wiper system.
• Headlamp Switch Inoperative	• Fuse. • Circuit. • Headlamp switch.	• REFER to Section 17-01 to diagnose the headlamps.
• Hazard Flasher Switch Inoperative	• Fuse. • Circuit. • Hazard flasher switch.	• REFER to Section 17-01 to diagnose the hazard flashers.
• Flash-to-Pass Switch Inoperative	• Fuse. • Circuit. • Flash-to-pass switch.	• REFER to Section 17-01 to diagnose the flash-to-pass switch.

DIAGNOSIS AND TESTING (Continued)

IGNITION SWITCH MECHANICAL DIAGNOSIS

Condition	Possible Source	Action
• High Key Efforts	• Damaged ignition switch lock cylinder.	• LUBRICATE ignition switch lock cylinder and CHECK for burrs on key. If effort is still excessive, REPLACE ignition switch lock cylinder.
	• Steering column shroud misaligned.	• ALIGN steering column shroud to fit properly.
	• Casting / actuator binds, sticks, grabs, with key rotation.	• If improper fit between casting and actuator exists, REPLACE parts. • If burrs are found on actuator surfaces which contact the casting during key travel, gently FILE these surfaces until smooth. Do not attempt to file teeth of actuator. • If serious burrs are found on casting surface which contact actuator during key travel, REPLACE the casting. • If actuator teeth show excessive wear or are burred, REPLACE actuator. • ASSEMBLE lock housing, taking care to thoroughly LUBE all internal components. CHECK key efforts. If still high, REPLACE lock housing.
	• Damaged ignition switch.	• REPLACE ignition switch.

Official Ford Motor Company Product

Pinpoint Tests

PINPOINT TEST A: IGNITION SWITCH INOPERATIVE

Test Step		Result ▶	Action to Take
A1	CHECK POWER FEED		
	• Remove power distribution box Fuses P (50A), N (50A) and J (20A). • Check for voltage between a known good ground and feed side of Fuses P, N and J. • **Is battery voltage present?**	Yes ▶ No ▶	GO to **A2**. INSPECT fuse links A and B for damage. REPLACE fuse links. INSPECT Circuit 37 (Y) between starter motor relay and power distribution box. SERVICE Circuit 37 (Y) for an open. RESTORE vehicle. RETEST system.
A2	CHECK POWER DISTRIBUTION BOX		
	• Check power distribution box Fuses P (50A), N (50A) and J (20A) for continuity. • **Is continuity present?**	Yes ▶ No ▶	GO to **A3**. REPLACE noncontinuous fuses. RESTORE vehicle. RETEST system.
A3	CHECK IGNITION SWITCH POWER		
	• Remove ignition switch connector C269. • Check for voltage between Circuit 37 (Y) at Pins B1-B5 on ignition switch connector C269 and a known good ground. • **Is battery voltage present?**	Yes ▶ No ▶	GO to **A4**. SERVICE open circuit between power distribution box and ignition switch, Circuit 37 (Y). RESTORE vehicle. RETEST system.
A4	CHECK IGNITION SWITCH		
	• Perform the Ignition Switch Mechanical Test. Refer to Component Tests in this section. • **Is the ignition switch OK?**	Yes ▶ No ▶	System OK. REPLACE ignition switch.

DIAGNOSIS AND TESTING (Continued)

PINPOINT TEST B: NO POWER IN ACC POSITION

Test Step		Result ▶	Action to Take
B1	ACCESSORY FEED CHECK		
	• Key to ACC. • Using multimeter with a lead connected to a known good ground, check for voltage at Pin A1, Circuit 297 (BK/LG) of the ignition switch connector C269. • **Is battery voltage present?**	Yes ▶ No ▶	GO to **B3**. GO to **B2**.
B2	IGNITION SWITCH CONTINUITY TEST		
	• Remove ignition switch. • Remove wiring connectors. • Actuate ignition switch to the ACC position. • Check for continuity between Pins B5 and A1. • **Is continuity present?**	Yes ▶ No ▶	INSPECT power distribution box Fuse P. SERVICE Circuit 37 (Y) from power distribution box Fuse P to ignition switch. RESTORE vehicle. RETEST system. REPLACE ignition switch. RESTORE vehicle. RETEST system.
B3	CHECK IP FUSE PANEL VOLTAGE		
	• Key to ACC. • Using a multimeter with one lead connected to a known good ground, check for voltage on Circuit 297 (BK/LG) at the feed side of IP Fuses 2, 6, 11 and 14. • **Is battery voltage present?**	Yes ▶ No ▶	GO to **B4**. SERVICE open in Circuit 297 (BK/LG) between ignition switch and IP fuse panel. RESTORE vehicle. RETEST system.
B4	CHECK IP FUSE PANEL		
	• Key off. • Check continuity of instrument panel fuse panel Fuses 2 (30A), 6 (15A), 11 (15A) and 14 (20A c.b.). • **Is continuity present?**	Yes ▶ No ▶	SERVICE accessory feed wiring for opens, Circuits 65 (DG), 182 (BR/W), 137 (Y/BK) and 400 (LB/BK). RESTORE vehicle. RETEST system. REPLACE instrument panel fuse panel fuse. RESTORE vehicle. RETEST system.

Official Licensed Product
Ford Motor Company

PINPOINT TEST C: NO POWER IN RUN POSITION

Test Step		Result ▶	Action to Take
C1	RUN FEED CHECK		
	• Key to RUN. • Using multimeter with a lead connected to a known good ground, check for voltage at Pins I1, A1, A3, A2, A4, Circuits 16 (R/LG), 297 (BK/LG), 687 (GY/Y) and 687 (GY/Y) respectively. • **Is battery voltage present?**	Yes ▶ No ▶	GO to **C3**. GO to **C2**.
C2	IGNITION SWITCH CONTINUITY TEST		
	• Remove ignition switch. • Remove wiring connectors. • Key to RUN. • Check for continuity between Pins B5 and I1, B1 and A1, B3 and A3, B2 and A2, Circuits 37 (Y), 16 (R/LG), 37 (Y), 297 (BK/LG), 37 (Y), 687 (GY/Y), 37 (Y), 687 (GY/Y) respectively of the ignition switch connector C269. • **Is continuity present?**	Yes ▶ No ▶	INSPECT power distribution box Fuses P, N and J. SERVICE Circuit 37 (Y) from power distribution box fuses to ignition switch. RESTORE vehicle. RETEST system. REPLACE ignition switch. RESTORE vehicle. RETEST system.
C3	CHECK IP FUSE PANEL VOLTAGE		
	• Key to RUN. • Using multimeter with one lead connected to a known good ground, check for voltage on Circuits 16 (R/LG), 16 (R/LG), 297 (BK/LG), 687 (GY/Y), 687 (GY/Y), 687 (GY/Y) at the feed side of IP Fuses 17; 3; 2, 6, 11, 14; 7; 1; and 15 and 18 respectively. • **Is battery voltage present?**	Yes ▶ No ▶	GO to **C4**. SERVICE open in affected circuit between ignition switch and instrument panel fuse panel. RESTORE vehicle. RETEST system.

DIAGNOSIS AND TESTING (Continued)

PINPOINT TEST C: NO POWER IN RUN POSITION (Continued)

Test Step		Result ▶	Action to Take
C4	CHECK IP FUSE PANEL		
	• Key off. • Check continuity of instrument panel fuse panel Fuses 17 (10A), 3 (3A), 2 (30A), 6 (15A), 11 (15A), 14 (20A c.b.), 7 (15A), 1 (30A), 15 (20A) and 18 (10A). • **Is continuity present?**	Yes ▶	SERVICE run feed wiring for opens, Circuits 640 (R/Y), 276 (BR), 65 (DG), 182 (BR/W), 137 (Y/BK), 400 (LB/BK), 8 (O/Y), 399 (BR/Y), 601 (LB/PK) and 296 (W/P). RESTORE vehicle. RETEST system.
		No ▶	REPLACE instrument panel fuse panel fuse. RESTORE vehicle. RETEST system.

PINPOINT TEST D: NO POWER IN START POSITION

Test Step		Result ▶	Action to Take
D1	START FEED CHECK		
	CAUTION: Do not overcrank the starter motor when performing the following pinpoint test steps. Both mechanical and electrical damage to the starter motor can result. NOTE: When probing for voltage on more than one pin of the ignition switch, use multiple multimeters and assistants to watch the voltage levels on the multimeters while the starter motor is being cranked. Set up and securely connect all wires to the ignition switch pins and connect those leads to the positive leads of the multimeters before performing the test step. The negative leads of the multimeters are connected to a known good ground. • Disconnect ignition coil primary wire. • Key in START. • Using a multimeter with a lead connected to a known good ground, check for voltage at Pins I1 and STA, Circuits 16 (R/LG) and 32 (R/BL) respectively of the ignition switch connector C269. • Connect the positive lead to the positive battery post. Connect the negative lead to Pins P1 and P2, Circuits 41 (BK/LB) and 512 (T/LG) respectively of the ignition switch connector C269. • **Is battery voltage present?**	Yes ▶ No ▶	GO to **D3**. GO to **D2**.
D2	IGNITION SWITCH CONTINUITY TEST		
	• Remove ignition switch. • Remove wiring connectors. • Key to START. • Check for continuity between Pins B5 and I1, B4 and STA, P1 and GND, and P2 and GND, Circuits 37 (Y), 16 (R/LG), 37 (Y), 32 (R/BL), 41 (BK/LB), 57 (BK), 512 (T/LG), 57 (BK) respectively of the ignition switch connector C269. • **Is continuity present?**	Yes ▶ No ▶	INSPECT power distribution box Fuses P and J. SERVICE Circuit 37 (Y) from power distribution box fuses to ignition switch. SERVICE open in Circuit 41 (BK/LB) or Circuit 512 (T/LG). RESTORE vehicle. RETEST system. REPLACE ignition switch. RESTORE vehicle. RETEST system.
D3	CHECK IP FUSE PANEL VOLTAGE		
	• Key to START. • Using a multimeter with one lead connected to a known good ground, check for voltage on Circuits 16 (R/LG) and 16 (R/LG) at feed side of instrument panel Fuses 17 and 3. • **Is battery voltage present?**	Yes ▶ No ▶	GO to **D4**. SERVICE open in affected circuit between ignition switch and instrument panel fuse panel. RESTORE vehicle. RETEST system.

Ford Motor Company Licensed Product

DIAGNOSIS AND TESTING (Continued)

PINPOINT TEST D: NO POWER IN START POSITION (Continued)

Test Step		Result	Action to Take
D4	CHECK STARTING SYSTEM FEED		
	• Key to START. • Check for voltage on Transmission Connector C1012 Circuit 32 (R/LB) at clutch pedal position switch (manual transmission) or transmission range sensor (automatic transmission). • **Is battery voltage present?**	Yes ▶	GO to **D5**. If problem persists, REFER to Section 03-06A (gasoline engines) or Section 03-06B (diesel engines).
		No ▶	REFER to Section 03-06A (gasoline engines) or Section 03-06B (diesel engines).
D5	CHECK IP FUSE PANEL		
	• Key off. • Check continuity of instrument panel fuse panel Fuses 17 (10A) and 3 (3A). • **Is continuity present?**	Yes ▶	SERVICE START feed wiring for opens, Circuits 16 (R/LG) and 16 (R/LG). RESTORE vehicle. RETEST system.
		No ▶	REPLACE instrument panel fuse panel fuse. RESTORE vehicle. RETEST system.

Component Tests

Ignition Switch Continuity Test

NOTE: For an engine-won't-crank condition with an automatic transmission (7003), determine if the condition exists with the shift control selector level in both PARK and NEUTRAL positions before performing the ignition switch continuity tests. If the no-crank condition occurs in one shift lever position but not the other, a more probable cause is the neutral start switch located in the transmission.

1. Disconnect ignition key warning switch terminal and wire from the ignition switch.
2. Test the continuity of the ignition switch.
3. Connect a self-powered test lamp or ohmmeter between the blade terminals indicated on the chart. No continuity between any blade and chassis ground should exist in any ignition switch position except the proof Circuit 41 (BK/LB) (Pin P1) and Circuit 512 (T/LG) (Pin P2) in the START position only.

Ignition Switch Mechanical Test

NOTE: For electrical component testing of the ignition switch, refer to the Electrical and Vacuum Troubleshooting Manual, Cell 149.

NOTE: Accessories that fail to operate with the key in RUN, or that remain on when the key is turned off, may be the result of a misadjusted ignition switch rather than a malfunctioning ignition switch. Refer to Ignition Switch in the Adjustments portion of this section.

NOTE: Do not apply lubricant to the inside of the ignition switch.

Test the steering column ignition system mechanical operation by rotating the key through all positions of the ignition switch. The movement should feel smooth with no sticking or binding. The ignition system should return from the START position back to the ON position without assistance (spring return). If sticking or binding is encountered, check for the following:

- burrs on the ignition switch lock cylinder
- binding ignition switch lock cylinder
- shroud rubbing against ignition switch lock cylinder
- burrs or foreign material around the rack-and-pinion actuator in the housing of the ignition switch lock cylinder
- insufficient lube on actuator
- binding ignition switch

REMOVAL AND INSTALLATION

Multi-Function Switch

Removal

1. Disconnect battery ground cable (14301).
2. Remove the steering column shroud (3530).
3. Remove two self-tapping screws that retain the multi-function switch (13K359) to the steering column tube casting. Disengage multi-function switch from casting.
4. **CAUTION: Do not damage locking tabs or PRND21 cable.**

   Disconnect the two electrical connectors.

REMOVAL AND INSTALLATION (Continued)

Multi-Function Switch, F-250 Heavy Duty, F-350 and F-Super Duty Chassis Cab

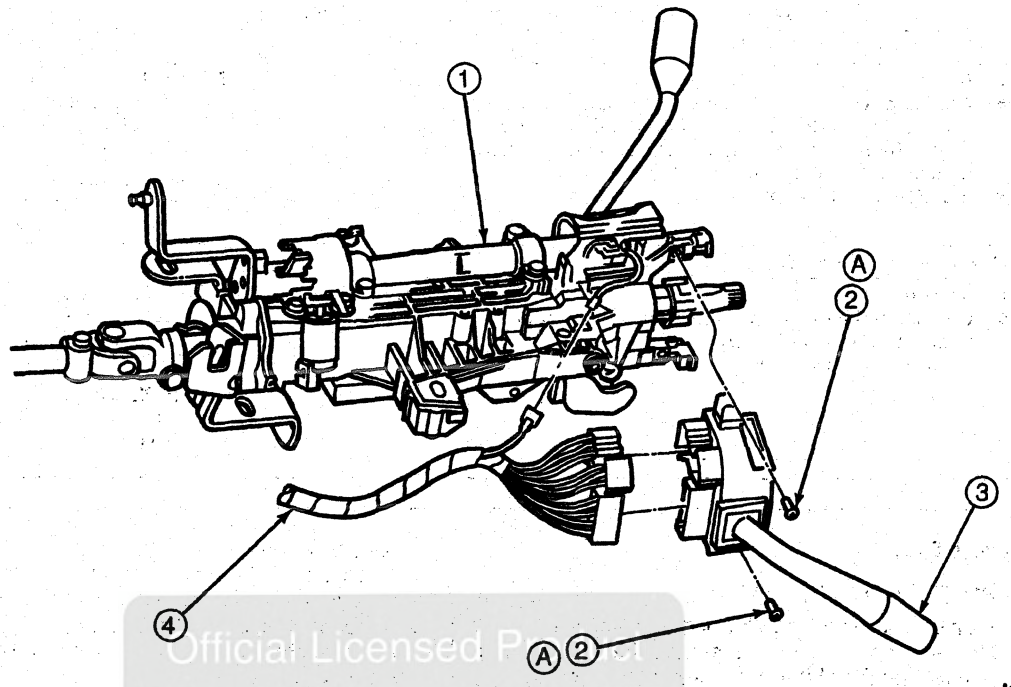

K17053-D

Official Licensed Product
Ford Motor Company

Item	Part Number	Description
1	3514	Steering Column Tube
2	390345-S36	Screw
3	13K359	Multi-Function Switch

(Continued)

Item	Part Number	Description
4	—	Wiring to Multi-Function Switch (Part of Main Wiring Harness 14401)
A	—	Tighten to 2-3 N·m (18-27 Lb-In)

Multi-Function Switch, F-Super Duty Motorhome

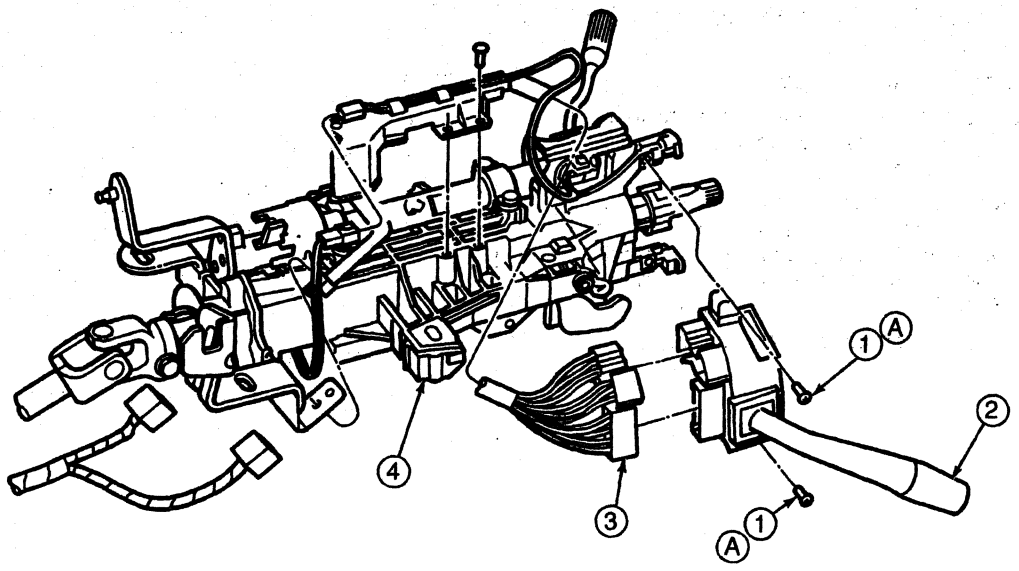

K17055-D

REMOVAL AND INSTALLATION (Continued)

Item	Part Number	Description
1	390345-S36	Screw
2	13K359	Multi-Function Switch
3	14A320	Headlamp Dimmer Switch Jumper Wiring

(Continued)

Item	Part Number	Description
4	3F723	Steering Actuator Housing
A	—	Tighten to 2-3 N·m (18-27 Lb-In)

Installation

1. Install the two switch electrical connectors to full engagement. The wiring for the switch is to be routed under the PRND21 cable.
2. Align the mounting holes on multi-function switch with the holes in the steering column tube casting. Install two self-tapping screws making sure to start the screws in the previously tapped holes. Tighten to 2-3 N·m (18-27 lb-in).
3. For automatic transmission (7003), verify that the PRND21 adjustment is correct.
4. Install the steering column shroud.
5. NOTE: When the battery (10655) has been disconnected and reconnected, some abnormal drive symptoms may occur while the powertrain control module (PCM)(12A650) relearns its adaptive strategy. The vehicle may need to be driven 16 km (10 miles) or more to relearn the strategy.

   Connect the battery ground cable.
6. Check the steering column tube (3514) for proper operation.

Ignition Switch

Removal

1. Disconnect battery ground cable (14301). Remove the upper steering column shroud (3530) by removing the self-tapping screws.
2. Remove four bolts retaining lower steering column shroud and remove lower steering column shroud.
3. Remove lock screw and disconnect the ignition switch electrical connector.
4. Rotate the key to the RUN position.
5. Remove the two screws retaining ignition switch (11572).
6. Disengage the ignition switch from the actuator.

Installation

1. NOTE: A new replacement ignition switch assembly will be set in the RUN position as received.

   Adjust the ignition switch by sliding the carrier to the RUN position.
2. Make sure the ignition switch lock cylinder (11582) is in the RUN position. The RUN position is achieved by rotating the ignition switch lock cylinder approximately 90 degrees from the LOCK position.
3. Install the ignition switch into the column actuator hole. It may be necessary to move the ignition switch back and forth slightly to align the ignition switch mounting holes with the lock cylinder housing threaded holes.
4. Install retaining screws. Tighten to 6-8 N·m (53-71 lb-in).
5. Connect the electrical connector to the ignition switch. Tighten lock screw to 0.8-1.3 N·m (7-12 lb-in).
6. NOTE: When the battery (10655) has been disconnected and reconnected, some abnormal drive symptoms may occur while the powertrain control module (PCM)(12A650) relearns its adaptive strategy. The vehicle may need to be driven 16 km (10 miles) or more to relearn the strategy.

   Connect battery ground cable. Check ignition switch for proper function, including START and ACC positions. Also, make sure that the column is in the LOCK position.
7. Install the upper steering column shroud and lower steering column shroud.

Brake-Shift Interlock Switch

NOTE: Brake-shift interlock (BSI) hardware provided by Ford Motor Company may not have been activated by the final stage manufacturer due to modification or omission of the center high-mount stoplamp (CHMSL). A service kit is being provided as an alternate method to activate the BSI if the vehicle was not equipped with a CHMSL by the final stage manufacturer or if the Ford-installed CHMSL was modified or removed by the final stage manufacturer.

Removal

1. Remove steering column. Refer to Section 11-04.
2. Unclip wire terminal from solenoid.
3. Remove insert plate and solenoid by removing three retaining screws.
4. Pry off clip.

REMOVAL AND INSTALLATION (Continued)

Installation

1. NOTE: The clip which retains the solenoid to the insert plate should not be replaced for service. The clip's sole purpose is an assembly aid for the assembly plant.

   Position insert plate / solenoid assembly to the steering column and tighten the retaining screws.
2. Install the steering column in the vehicle. Refer to Section 11-04.

Lockout Switch

Removal

1. NOTE: The indicator light cover can be removed from the gearshift lever (7210) if it is damaged. Carefully insert a thin-blade screwdriver into the gearshift lever and, using the ridge on the cover, slide cover off gearshift lever.

   Remove the lockout switch cover by inserting a thin-blade screwdriver into the recess at the end of the gearshift lever and unsnapping the cover from the gearshift lever.
2. Insert a thin-blade screwdriver into the slot on the lockout switch and remove the lockout switch by pulling lockout switch out of the gearshift lever.

Installation

1. NOTE: If the indicator light cover was removed, install by positioning cover to gearshift lever and sliding into place. Make sure the sides of the cover fit properly into the slots on the gearshift lever.

   Position lockout switch to gearshift lever, making sure the contact pins are properly oriented to the connector. Install lockout switch by pushing into gearshift lever until bottom is felt.
2. Position lockout switch cover to gearshift lever and snap into place.
3. Check lockout switch for proper operation.

ADJUSTMENTS

Ignition Switch

1. NOTE: A new replacement ignition switch (11572) assembly will be set in the RUN position as received.

   Adjust the ignition switch by sliding the carrier to the RUN position.
2. Make sure the ignition switch lock cylinder (11582) is in the RUN position. The RUN position is achieved by rotating the ignition switch lock cylinder approximately 90 degrees from the LOCK position.
3. Install the ignition switch into the column actuator hole. It may be necessary to move the ignition switch back and forth slightly to align the ignition switch mounting holes with the lock cylinder housing threaded holes.
4. Install retaining screws. Tighten to 6-8 N·m (53-71 lb-in).
5. Connect the electrical connector to the ignition switch. Tighten lock screw to 0.8-1.3 N·m (7-12 lb-in).
6. Connect battery ground cable (14301). Check ignition switch for proper function, including START and ACC positions. Also, make sure the column is in the LOCK position.

SPECIFICATIONS

TORQUE SPECIFICATIONS

Description	N·m	Lb-in
Multi-Function Switch-to-Steering Column Attaching Screws	2-3	18-27
Captive Bolt	6-8	53-71
Ignition Switch Electrical Connector Lock Screw	0.8-1.3	7-12

SPECIAL SERVICE TOOLS / EQUIPMENT

ROTUNDA EQUIPMENT

Model	Description
105-R0051	73 Digital Multimeter

GROUP

CLIMATE CONTROL SYSTEM 12

SECTION TITLE	PAGE
AIR CONDITIONING SYSTEM, MANUAL A/C-HEATER	12-03A-1
CLIMATE CONTROL SYSTEM, SERVICE	12-00-1
COMPRESSOR AND CLUTCH, FS-10	12-03B-1
COMPRESSOR AND CLUTCH, SD-7H15	12-03C-1
HEATING AND DEFROSTING	12-02-1

SECTION 12-00 Climate Control System, Service

Official Licensed Product
Ford Motor Company

SUBJECT	PAGE
VEHICLE APPLICATION	12-00-2
BASIC PRINCIPLES	
Effect of Pressure on Boiling or Condensation	12-00-2
Heat Transfer	12-00-2
Latent Heat of Vaporization	12-00-2
DESCRIPTION AND OPERATION	
A/C Compressor and A/C Clutch Assemblies	12-00-6
A/C Condenser Core	12-00-7
A/C Cycling Switch	12-00-9
A/C Evaporator Core	12-00-8
A/C Evaporator Core Orifice	12-00-7
A/C Pressure Cutoff Switch	12-00-8
A/C Refrigerant System Operation	12-00-4
Refrigerant Flow	12-00-4
Refrigerant Systems	12-00-5
Refrigerant System Protection	12-00-6
A/C Compressor Pressure Relief Valve	12-00-6
A/C Pressure Cut-Off Switch	12-00-6
Safety Precautions	12-00-2
Service Gauge Port Valves	12-00-10
Service Precautions	12-00-3
Special Service Equipment	12-00-9
Spring Lock Coupling	12-00-7
Suction Accumulator/Drier	12-00-8
DIAGNOSIS AND TESTING	
Climate Control System	12-00-10
Component Tests	12-00-21
Blower Motor	12-00-24
Blower Motor Resistor	12-00-24
Heater Core, Plugged	12-00-23
Vacuum Leak Diagnosis	12-00-24
Inspection and Verification	12-00-10
Pinpoint Tests	12-00-12
Symptom Chart	12-00-10
Electrical Schematic Reference(s)	12-00-10
SERVICE PROCEDURES	
A/C Compressor	12-00-31
SERVICE PROCEDURES (Cont'd.)	
A/C Manifold and Tube Leak Test	12-00-31
External Leak Test	12-00-31
Rotating Torque Check	12-00-32
A/C Evaporator Core Orifice Replacement Kit Installation	12-00-39
A/C Evaporator Core/A/C Condenser Core	12-00-29
On-Vehicle Leak Test	12-00-29
A/C Manifold Gauge Set Connection	12-00-34
Inspection and Assembly Requirements	12-00-40
Mini-Tube Vacuum Hose Service	12-00-40
Refrigerant Oil Addition	12-00-39
R-134a Refrigerant Oil	12-00-40
Refrigerant Recovery	12-00-34
Refrigerant System	12-00-33
Recovery of Contaminated A/C Systems	12-00-33
Refrigerant Identification and Analysis	12-00-33
Special Service Equipment	12-00-33
Refrigerant System Filtering After A/C Compressor Replacement	12-00-39
Refrigerant System Tests	12-00-24
Checking for A/C Leaks	12-00-28
Leak Detector, Electronic	12-00-28
Leak Tracer Dye	12-00-29
Service Access Gauge Port Valves	12-00-28
Spring Lock Coupling	12-00-37
Suction Accumulator/Drier Replacement Guidelines	12-00-39
System Charging	12-00-37
Charging with a Charging Cylinder	12-00-37
System Charging Setup	12-00-36
System Discharging and Recovery	12-00-35
System Evacuating	12-00-35
System Flushing	12-00-35
SPECIFICATIONS	12-00-41
SPECIAL SERVICE TOOLS/EQUIPMENT	12-00-41

VEHICLE APPLICATION

F-250 Heavy Duty, F-350 and F-Super Duty

BASIC PRINCIPLES

Heat Transfer

If two substances of different temperature are placed near each other, the heat in the warmer substance will always travel to the colder substance until both are of equal temperature. For example, a cake of ice in an ice box does not communicate its coldness to the bottle of milk standing nearby. Rather, the heat in the warm milk automatically flows into the ice.

To determine the amount of heat that transfers from one substance to another, science uses the British Thermal Unit or BTU. One BTU is the amount of heat required to raise the temperature of one pound of water 0.55°C (1°F). For example, to raise the temperature of one pound of water from 0°C to 100°C (32°F to 212°F), one BTU of heat must be added for each 0.55°C (1°F) rise in temperature or a total of 180 BTUs of heat. Conversely, in order to lower the temperature of one pound of water from 100°C to 0°C (212°F to 32°F), 180 BTUs of heat must be removed from the water.

Latent Heat of Vaporization

When a liquid boils (changes to a gas) it absorbs heat without raising the temperature of the resulting gas. When the gas condenses (changes back to a liquid), it gives off heat without lowering the temperature of the resulting liquid.

For example, place one pound of water at 0°C (32°F) in a container over a flame. With each BTU of heat that the water absorbs from the flame, its temperature rises 0.55°C (1°F). Thus, after it has absorbed 180 BTUs of heat, the water reaches a temperature of 100°C (212°F). Even though the flame continues to give its heat to the water, the temperature of the water remains at 100°C (212°F). The water, however, starts to boil or change from the liquid to the gaseous state. It continues to boil until the water has passed off into the atmosphere as vapor. If this vapor were checked with a thermometer, it also would show a temperature of 100°C (212°F). In other words, there was a rise of only 100°C (212°F) (from 0°C to 100°C or 32°F to 212°F) in the water and vapor temperature even though the flame applied many more than 180 BTUs of heat. In this case, the heat is absorbed by the liquid in the process of boiling and disappears in the vapor. If the vapor were brought in contact with cool air, the hidden heat would flow into the cooler air as the vapor condensed back to water. Scientists refer to this natural law as the latent (hidden) heat of vaporization.

Water has a latent heat of vaporization of 970 BTUs and a boiling point of 100°C (212°F). This means that one pound of water at 100°C (212°F), will absorb 970 BTUs of heat in changing to vapor at 100°C (212°F). Conversely, the vapor will give off 970 BTUs of heat in condensing back to water at 100°C (212°F).

This tremendous heat transfer, occurring when a liquid boils or a vapor condenses, forms the basic principle of all conventional refrigeration systems.

For a liquid to be a refrigerant, it must also have a low boiling point. That is, the temperature at which it boils must be lower than the substance to be cooled.

R-134a is a non-CFC refrigerant used in all Ford Motor Company vehicles.

Effect of Pressure on Boiling or Condensation

As refrigerant passes through an air conditioning system, it flows under high-pressure conditions, first as a high-pressure vapor between the compressor and A/C condenser core (19712), then, as a high-pressure liquid between the A/C condenser core and the A/C evaporator core orifice (19D990). It expands to a low-pressure liquid at the A/C evaporator core orifice and the refrigerant in the A/C evaporator core (19860) absorbs heat as air passes around the A/C evaporator core, warming the refrigerant into a gas. It returns to the A/C compressor (19703). As pressures in the closed refrigerant circuit vary, temperatures will also vary. As pressures increase, temperatures also increase; as they decrease, temperatures also decrease.

DESCRIPTION AND OPERATION

Safety Precautions

The refrigerant R-134a is a hydrofluorocarbon refrigerant. R-134a is noncorrosive, nonexplosive, nonflammable and has a slight ether-type odor. R-134a is heavier than air. Although it is classified as a safe refrigerant, certain precautions must be observed to protect the parts involved and the person working on the unit.

DESCRIPTION AND OPERATION (Continued)

WARNING: AVOID BREATHING A/C REFRIGERANT AND LUBRICANT VAPOR OR MIST. IF ACCIDENTAL SYSTEM DISCHARGE OCCURS, VENTILATE THE WORK AREA BEFORE RESUMING SERVICE. LIQUID R-134A, AT NORMAL ATMOSPHERIC PRESSURES AND TEMPERATURES, EVAPORATES SO QUICKLY THAT IT HAS THE TENDENCY TO FREEZE ANYTHING IT CONTACTS. FOR THIS REASON, EXTREME CARE MUST BE TAKEN TO PREVENT ANY LIQUID REFRIGERANT FROM COMING IN CONTACT WITH THE SKIN AND ESPECIALLY THE EYES.

WARNING: WEAR NON-POROUS GLOVES AND SAFETY GOGGLES AT ALL TIMES WHEN HANDLING LIQUID REFRIGERANT. SHOULD ANY LIQUID REFRIGERANT GET INTO THE EYES OR ON THE SKIN, IMMEDIATELY FLUSH EYES AND SKIN WITH PLENTY OF WATER FOR AT LEAST 15 MINUTES. REMOVE CONTAMINATED CLOTHING AND SHOES. CALL A PHYSICIAN.

WARNING: REFRIGERANT R-134A IS ALWAYS UNDER PRESSURE. BECAUSE THE SYSTEM IS TIGHTLY SEALED, HEAT APPLIED TO ANY PART COULD CAUSE THIS PRESSURE TO BUILD UP EXCESSIVELY. TO AVOID A DANGEROUS EXPLOSION, KEEP AWAY FROM OPEN FLAMES, GLOWING METAL SURFACES, BLOW TORCH, STEAM CLEANING AND WELDING. R-134A CAN BE DECOMPOSED AT HIGH TEMPERATURES. MAKE SURE THAT CONTAINERS ARE NEVER HEATED TO OVER 52°C (125°F). CONTAINERS SHOULD BE STORED AND INSTALLED IN ACCORDANCE WITH ALL STATE AND LOCAL ORDINANCES.

CAUTION: Use only R-134a refrigerant. Due to environmental concerns, when the air conditioning system is drained, the refrigerant must be collected using refrigerant recovery/recycling equipment. This became law in November 1995. R-134a must never be removed without the appropriate equipment or released into the atmosphere. Use of a recovery machine dedicated for R-134a is necessary to reduce the possibility of oil and refrigerant incompatibility and contamination concerns. Refer to the instructions provided by the equipment manufacturer when removing refrigerant from or charging the air conditioning system.

CAUTION: When admitting R-134a into the refrigerant system, always keep the tank in an upright position. If the tank is on its side or upside down, liquid R-134a will enter the system and may damage the compressor. Refrigerant R-134a should not be mixed with air for leak testing or used with air for any other purpose above atmospheric pressure. R-134a is combustible when mixed with high concentrations of air and higher pressures.

CAUTION: A number of manufacturers are producing refrigerant products which are described as being direct replacements for refrigerant-134a. The use of any unauthorized substitute refrigerant may severely damage the A/C components. If service is required, use only new or recycled Refrigerant-134a.

Service Precautions

Observe the following service precautions.

1. Never open or loosen a connection before recovering the refrigerant from the system following equipment manufacturers' recommendation.
2. Seal open fittings with a cap or plug immediately after disconnecting a component from the system.
3. Clean the outside of the fittings thoroughly before disconnecting a component from the system.
4. Do not remove the sealing caps from a replacement component until ready to install.
5. Refrigerant oil will absorb moisture from the atmosphere if left uncapped. Do not open an oil container until ready to use and install the cap immediately after using. Store the oil only in a clean, moisture-free container.
6. Install new O-rings before connecting an open fitting. Coat the fitting and O-ring with refrigerant oil before making the connection(s).
7. When installing a refrigerant line, avoid sharp bends. Position the line away from the exhaust or any sharp edges that may chafe the line.
8. Tighten fittings only to specifications. The steel and aluminum fittings used in the refrigeration system will not tolerate overtightening.
9. When disconnecting a threaded fitting, use a wrench on both halves of the fitting to prevent twisting of the refrigerant lines or tubes.
10. Do not open a refrigerant system or uncap a replacement component unless it is as close as possible to room temperature. This will prevent condensation from forming inside a component that is cooler than the surrounding air.
11. Evacuate a system which has been opened to replace a component or one which has discharged through leakage before charging.
12. Keep service tools and the work area clean to avoid contamination of the refrigerant system.

DESCRIPTION AND OPERATION (Continued)

A/C Refrigerant System Operation

Refrigerant Flow

Air Conditioning System

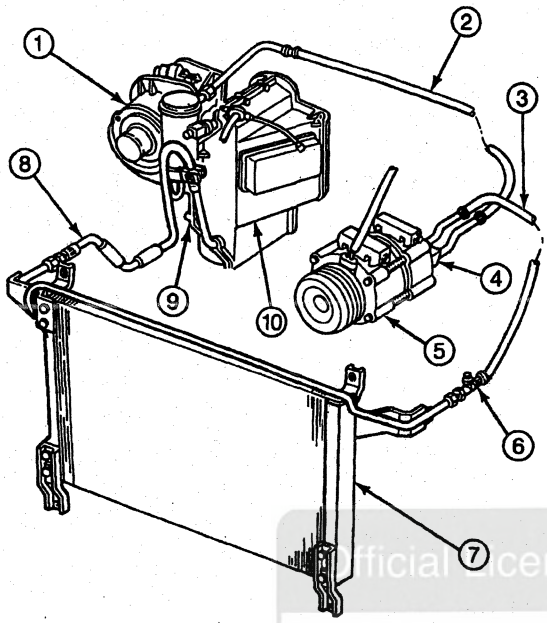

M4208-D

Item	Part Number	Description
1	18527	Blower Motor
2	—	Suction Line (Part of 19D734)
3	—	Discharge Line (Part of 19D734)
4	19D734	A/C Manifold and Tube
5	19703	A/C Compressor
6	19D890	High-Pressure Service Valve
7	19712	A/C Condenser Core
8	19835	Condenser to Evaporator Tube
9	19930	A/C Blower Housing
10	19B735	A/C Evaporator Case Cover

During stabilized conditions (air conditioning system shutdown), refrigerant system pressures are equalized on both the high and low pressure sides of the system.

Refrigerant Flow

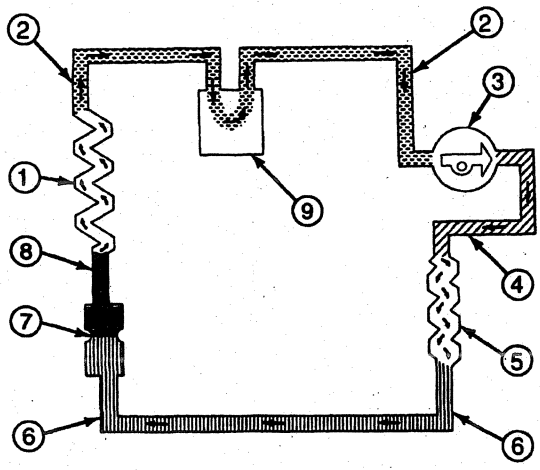

REFRIGERANT FLOW M4001-E

Item	Part Number	Description
1	19860	A/C Evaporator Core (Low-Pressure Liquid In, Low-Pressure Vapor Out)
2	19867	Evaporator to Compressor Suction Line (Low-Pressure Vapor)
3	19703	A/C Compressor (Low-Pressure Vapor In, High-Pressure Vapor Out)
4	19972	A/C Compressor to Condenser Discharge Line (High-Pressure Vapor)
5	19712	A/C Condenser Core (High-Pressure Vapor In, High-Pressure Liquid Out)
6	19835	Condenser to Evaporator Tube (High-Pressure Liquid)
7	19D990	A/C Evaporator Core Orifice (Restriction)
8	—	Evaporator Inlet (Low-Pressure Liquid) (Part of 19860)
9	19C836	Suction Accumulator/Drier (Low-Pressure Vapor)

When the blower motor (18527) is on and the function selector lever is in any air conditioner DEFROST position, the A/C clutch field coil (2987) is energized and the clutch plate is pulled into contact with the compressor clutch pulley. The clutch plate and hub assembly then rotates the compressor shaft.

Official Licensed Reprint
Ford Motor Company

DESCRIPTION AND OPERATION (Continued)

When the compressor shaft is rotated, the pistons are alternately moved back and forth with respect to their cylinder bores. As each piston is pulled through its cylinder bore, the pressure in the cylinder suddenly reduces to a pressure (or vacuum) considerably lower than the refrigerant system. The higher refrigerant system vapor pressure overcomes the suction reed valve spring pressure, forcing itself through the reed valve and into the lower pressure (or vacuum) area inside the compressor cylinder. The spring pressure on the reed valve closes the valve when the refrigerant system suction vapor pressure and the compressor cylinder vapor pressure are equalized.

As each piston is forced into its respective cylinder bore, the refrigerant vapors from the suction side of the refrigerant system are compressed into a decreasingly smaller area, thus increasing the refrigerant vapor pressure and also raising the refrigerant vapor temperature. The higher refrigerant vapor pressure now assists in sealing the suction reed valve closed and also opens the discharge (high pressure) reed valve as the cylinder pressure exceeds the higher pressure side of the refrigerant system. When the compressed higher pressure and temperature refrigerant vapor is discharged into the high-pressure side of the refrigerant system, the discharge reed valve spring pressure and the high side refrigerant pressure closes and seals the reed valve, thus preventing the discharge gas from entering the compressor cylinder. The compressor's refrigerant vapor compression cylinder then begins again.

The high-pressure and high-temperature compressor discharge refrigerant gas is released into the top of the A/C condenser core (19712), via the compressor's discharge hose. The A/C condenser core, being close to ambient temperature, causes the refrigerant vapor to condense into a liquid when heat is removed from the refrigerant by ambient air passing over the fins and tubing.

Liquid refrigerant from the A/C condenser core exits from the bottom of the A/C condenser core and enters the condenser to evaporator tube (19835) and then the inlet side of the A/C evaporator core orifice (19D990) located in the evaporator inlet tube. The inlet filter screen of the A/C evaporator core orifice removes coarse contaminant particulates, which may be present in the liquid refrigerant before the liquid refrigerant enters the calibrated opening of the A/C evaporator core orifice. The outlet end of the A/C evaporator core orifice has a fine mesh filter with four open side slots in the body of the A/C evaporator core orifice, upstream from the filter. This filter removes fine contaminants and causes some of the refrigerant to exit through the nonfiltered side slots. The side slots and filter act as a refrigerant flow noise suppressor.

Pressure in the A/C evaporator core (19860) is reduced as a result of air conditioner compressor suction. As the pressure is lowered and the condenser to evaporator tube pressure increases, the liquid refrigerant passes through the A/C evaporator core orifice and enters the A/C evaporator core at a low pressure and as a cold liquid. As airflow passes over the plate/fin sections of the A/C evaporator core, the refrigerant inside absorbs the heat and changes into a vapor.

Compressor suction draws the vaporized refrigerant and oil mixture into the suction accumulator/drier (19C836) where the heavier oil-laden vapors fall to the bottom and the lighter vapors and oil mixture continue their path to the A/C compressor (19703) via the top of the vapor return tube. A desiccant bag located inside the suction accumulator/drier, absorbs and retains moisture that may be circulating in the refrigerant system. The heavier oil-laden refrigerant also returns to the compressor through a small liquid bleed hole near the bottom of the vapor return tube. The liquid bleed hole provides a controlled oil amount to pass through the opening and to enter into the main vapor flow path to the suction side of the A/C compressor.

Refrigerant Systems

F-Series vehicles offer the R-134a refrigerant system.

- The R-134a system uses a non-chlorofluorocarbon (non-CFC)-based refrigerant.
- R-134a is a hydrofluorocarbon (HFC)-based refrigerant.

The A/C refrigerant system is an A/C clutch cycling orifice tube type. The system components are:

- A/C compressor
- A/C clutch (2884)
- A/C condenser core
- A/C evaporator core
- suction accumulator/drier
- necessary connecting refrigerant lines

System operation is controlled by the following:

- A/C evaporator core orifice
- A/C cycling switch (19E561)
- A/C compressor pressure relief valve (19D644)
- A/C pressure cut-off switch (19D594)

The refrigerant system incorporates a 10-cylinder A/C compressor controlled by an A/C cycling switch connected in series with the A/C clutch.

The A/C cycling switch:

- senses A/C evaporator core pressure to control A/C compressor operation.
- uses this method of A/C compressor control to stop A/C compressor operation during ambient temperatures below approximately 10°C (50°F) and to prevent A/C evaporator core icing during normal system operation.

DESCRIPTION AND OPERATION (Continued)

An A/C compressor pressure relief valve is installed in the high-pressure side of the A/C manifold and tube (19D734) to protect the refrigerant system against excessive refrigerant pressures.

Operation of the A/C clutch is dependent on signals from the powertrain control module (PCM)(12A650). The system is programmed to interrupt A/C compressor operation when certain conditions exist. The A/C clutch can be shut off for several seconds under the following circumstances:

- at engine start-up
- at high engine speeds
- during heavy acceleration
- when the engine coolant temperature exceeds a predetermined temperature

An A/C evaporator core orifice is used to meter the flow of liquid refrigerant into the A/C evaporator core for passenger compartment cooling.

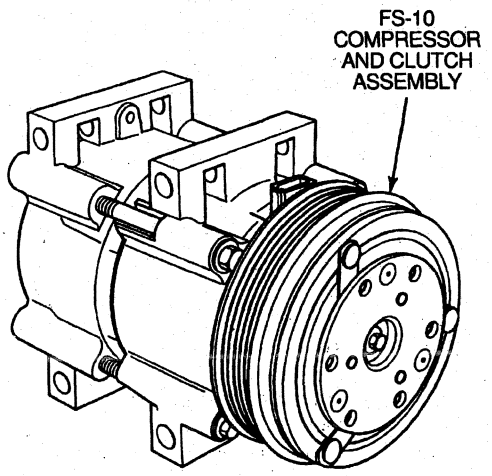

M4113-C

A/C Compressor and A/C Clutch Assemblies

The FS-10 A/C compressor (19703) is used on all F-Series vehicles.

An A/C clutch (2884) is energized when the A/C cycling switch (19E561), located on the suction accumulator/drier (19C836), closes. The closing of the A/C cycling switch completes the circuit to the A/C clutch and draws it into engagement with the compressor driveshaft.

When the A/C cycling switch is closed and the control knob/lever is set at MAX A/C, NORM A/C, or either of the settings calling for full or partial defroster operation, the A/C compressor will be operating. (A/C compressor operation during defrost is provided to minimize humidity in the passenger compartment.) The A/C compressor is mounted on the side of the engine and is driven by a drive belt (8620). Tension adjustment is obtained by means of an automatic tensioner (gasoline engines) or by moving the compressor braces away from the engine (diesel engines).

Refrigerant System Protection

A/C Compressor Pressure Relief Valve

Under extreme pressure conditions, the A/C compressor pressure relief valve (19D644) will momentarily open, allowing refrigerant vapor to escape. This relieves excessive pressure that might damage the A/C compressor (19703). The valve closes as soon as pressure is lower than the relief setting. This prevents loss of the complete refrigerant charge. The A/C compressor pressure relief valve is located in the A/C manifold and tube (19D734) at the rear of the A/C compressor.

A/C Pressure Cut-Off Switch

The A/C pressure cut-off switch (19D594) is located in the discharge line between the A/C compressor and A/C condenser core (19712).

Single Function

The A/C pressure cut-off switch has a set of electrical contacts which are normally closed. When compressor head pressure rises to approximately 2965-3241 kPa (430-470 psi), the contacts open and the compressor operation is shut off.

When compressor head pressure drops to approximately 1724 kPa (250 psi), the contacts close again and allow operation of the A/C compressor. Shutting down compressor operation prior to the pressure relief valve set point ensures containment of the refrigerant within the A/C system.

DESCRIPTION AND OPERATION (Continued)

A/C Condenser Core

The A/C condenser core (19712) is located in front of radiator. The A/C condenser core receives compressed (therefore heated) refrigerant gas from the A/C compressor (19703).

As the hot refrigerant gas flows through the A/C condenser core, it is cooled by air passing over the fins. The cooled, compressed refrigerant gas condenses to liquid refrigerant that flows directly to the A/C evaporator core (19860) through the A/C evaporator core orifice (19D990) in the inlet.

Spring Lock Coupling

The spring lock coupling is part of another assembly and is not available as a separate item. F-Series vehicles use tube O-fittings except for the evaporator liquid line, which is a spring lock coupling.

The spring lock coupling is a refrigerant line coupling held together by a garter spring inside a circular cage. When the spring lock coupling is connected, the flared end of the female fitting slips behind the garter spring inside the cage of the male fitting. The garter spring and cage then prevent the flared end of the female fitting from pulling out of the cage.

Two O-rings are used to seal between the two components of the spring lock coupling. These O-rings are green and made of special material. They must be replaced with an O-ring made of the same material. Use only the O-rings listed in the Master Parts Catalog for the spring lock coupling.

A plastic indicator ring is used on the spring lock coupling to indicate, during vehicle assembly, that the spring lock coupling is connected. Once the spring lock coupling is connected, the indicator ring is no longer necessary but will remain captive by the spring lock coupling near the cage opening.

After the spring lock coupling has been cleaned, install new O-rings lubricated with clean refrigerant oil. Connect the spring lock coupling by pushing with a slight twisting motion. When the spring lock coupling is connected a distinct click or snap should be heard or felt, indicating positive engagement. If possible, visually inspect the cage to make sure that the flared end of the female fitting is fully behind the garter spring. Otherwise, push and pull on the fitting to verify engagement.

A/C Evaporator Core Orifice

The A/C evaporator core orifice (19D990) is a restriction between the high and low pressure refrigerant and meters the flow of liquid refrigerant into the A/C evaporator core (19860).

The A/C evaporator core orifice is located in the evaporator core inlet tube and has filter screens on the inlet and outlet ends of the tube body. The inlet filter screen acts as a strainer for the liquid refrigerant flowing through the opening. The outlet screen acts to reduce the noise of the refrigerant flowing through the orifice tube. O-rings on the tube body prevent the high pressure liquid refrigerant from bypassing the A/C evaporator core orifice. Adjustment or repairs cannot be made to the A/C evaporator core orifice and it must be replaced as a unit. F-Series vehicles use a 0.062-inch orifice tube color coded red.

A/C Evaporator Orifice Removal

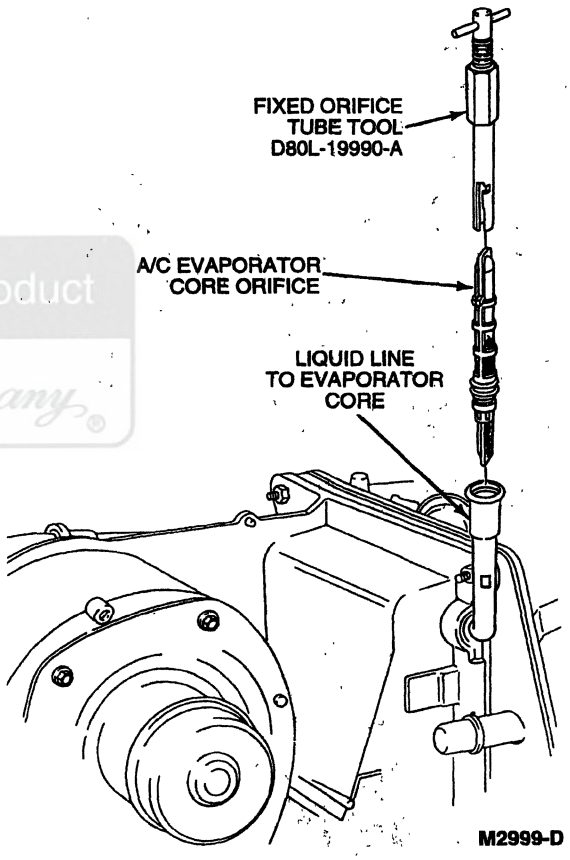

Ford Motor Company Official Licensed Product

DESCRIPTION AND OPERATION (Continued)

A/C Evaporator Core

The A/C evaporator core (19860) is a multi-pass plate/fin aluminum core. The condenser to evaporator tube (19835) (inlet) connects to the bottom of the A/C evaporator core and the suction accumulator/drier (inlet) connects to the top of the A/C evaporator core. The outlet of the accumulator/drier then connects to the evaporator to compressor suction line (19867). The evaporator tube is fitted with an A/C evaporator core orifice (19D990) to control refrigerant flow. This A/C evaporator core orifice can be removed from the evaporator core inlet tube for replacement if it becomes necessary. However, a special tool is necessary to prevent breakage of the A/C evaporator core orifice.

A/C Pressure Cutoff Switch

An A/C pressure cutoff switch is used on all models with air conditioning to interrupt A/C compressor (19703) operation in the event of high system discharge pressures that could result in the loss of refrigerant charge. The switch is located in the discharge line between the compressor and the A/C condenser core (19712). The switch is sensitive to the discharge pressure and functions to interrupt the A/C compressor operation if the discharge pressure exceeds a setting of 2965-3241 kPa (430-470 psi). The single-function switch only controls the circuit to the A/C cycling switch (19E561). When replacing the switch, tighten to 7-13 N·m (62-115 lb-in).

A/C Evaporator Core and Suction Accumulator/Drier

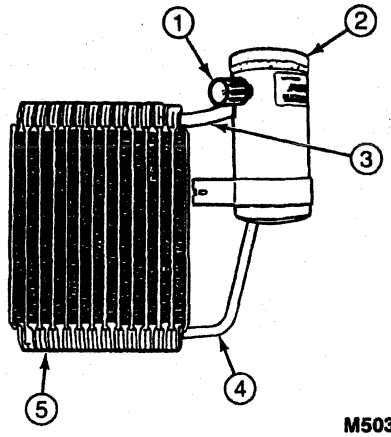

M5032-B

Item	Part Number	Description
1	—	Outlet to Compressor (Part of 19C836)
2	19C836	Suction Accumulator/Drier
3	—	To Suction Accumulator/Drier (Part of 19860)
4	—	From Condenser (Part of 19860)
5	19860	A/C Evaporator Core

Suction Accumulator/Drier

The suction accumulator/drier (19C836) is mounted on the side of the A/C evaporator core (19860) and attaches directly to the outlet tube. A suction service access gauge port valve is mounted on the inlet fitting of the suction accumulator/drier. Its purpose is to provide service access to the suction side of the refrigerant system for pressure readings, system diagnosis, and system charging. An inverted liquid diverter cup is mounted internally on top of the refrigerant vapor return tube, in the center of the suction accumulator/drier. Its purpose is to prevent the heavier, oil-laden liquid refrigerant from going directly into the evaporator to compressor suction line (19867). Upon entering the inlet of the suction accumulator/drier, the heavier, oil-laden refrigerant contacts the liquid diverter cup, which serves as an umbrella, and drips down onto the bottom of the housing. A small diameter aspirator tube, with approximately 1.50 mm (0.059 inch) inside diameter, is placed close to the bottom of the suction accumulator/drier at one end. It allows the accumulated heavier liquid refrigerant and oil mixture to re-enter the evaporator to compressor suction line at a controlled rate. The mixture passes through the aspirator tube and circulates through the A/C compressor (19703) without causing compressor damage due to slugging. A fine mesh-screened filter fits tightly around the bottom of the aspirator tube to filter refrigerant contaminants that may be in the system and prevent them from plugging the aspirator tube.

A desiccant bag is mounted inside the suction accumulator/drier tank assembly to absorb any moisture which may be in the refrigerant system.

Another fitting on the suction accumulator/drier, is used to mount the A/C cycling switch (19E561). It has a long-travel, Schrader-type valve stem core installed in the fitting opening to prevent refrigerant loss when the A/C cycling switch is removed.

DESCRIPTION AND OPERATION (Continued)

A/C Evaporator Core and Suction Accumulator/Drier

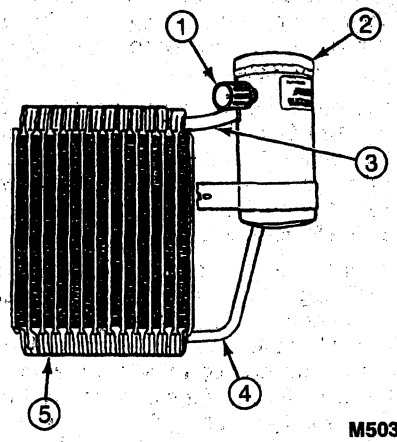

M5032-B

Item	Part Number	Description
1	—	Outlet to Compressor (Part of 19C836)
2	19C836	Suction Accumulator/Drier
3	—	To Suction Accumulator/Drier (Part of 19860)
4	—	From Condenser (Part of 19860)
5	19860	A/C Evaporator Core

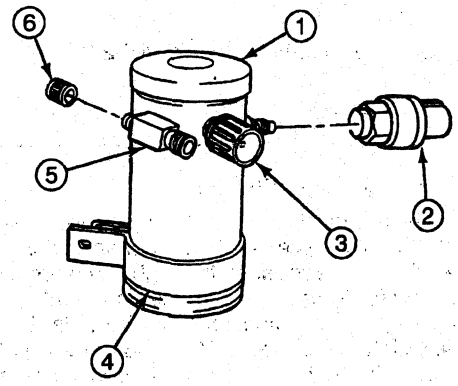

DM0300-A

Item	Part Number	Description
1	19C836	Suction Accumulator/Drier
2	19E561	A/C Cycling Switch
3	19867	Evaporator to Compressor Suction Line
4	19D607	A/C Accumulator Bracket
5	—	Evaporator to Accumulator Inlet Fitting (Part of 19C808)
6	19D702	A/C Charging Valve Cap

A/C Cycling Switch

The A/C cycling switch (19E561) is mounted on a Schrader valve on the accumulator/drier assembly. A valve depressor, located inside the threaded end of the A/C cycling switch, depresses the Schrader valve stem as the switch is mounted and allows the suction pressure inside the accumulator/drier housing to control the operation. The electrical contacts are normally open when the suction pressure is at or below 152 kPa (22 psi); they will close when the suction pressure rises to approximately 276-317 kPa (40-47 psi) or above. Lower ambient temperatures (below 10°C or 50°F), during cold weather seasons, will also open the contacts due to the pressure/temperature relationship of the refrigerant in the system. The electrical contacts control the circuit to the A/C clutch field coil (2987). When the contacts are closed, the A/C clutch field coil is energized and the A/C clutch (2884) is engaged to drive the A/C compressor (19703). When the contacts are open, the A/C clutch field coil is de-energized, the A/C clutch is disengaged and the compressor does not operate. The A/C cycling switch, when functioning properly, will control the pressure in the A/C evaporator core (19860) at a point where the plate/fin surface temperature will be maintained slightly above freezing, which prevents icing and the blockage of airflow.

Special Service Equipment

CAUTION: Do not use R-12 special tools and equipment when servicing an R-134a system. Doing so may cause damage to the R-134a A/C system.

R-134a systems require the use of special service equipment designed specifically for R-134a refrigerant systems. R-12 servicing equipment cannot be used when servicing R134-a A/C systems. R-134a special service equipment includes:

- Rotunda R-134a Mobile Recycling Center 023-00150 or equivalent
- Rotunda R-134a Manifold Gauge Set 176-R032A or equivalent
- Rotunda R-134a Automatic Calibration Halogen Leak Detector 023-R1003 or equivalent
- Rotunda R-134a High-Side Quick Disconnect 176-R0037 or equivalent
- Rotunda R-134a Low-Side Quick Disconnect 176-R0036 or equivalent
- Rotunda R-134a Vacuum Pump (1.5 CFM) 176-R0126 or equivalent
- Rotunda R-134a Vacuum Pump (3.0 CFM) 176-R0034 or equivalent

DESCRIPTION AND OPERATION (Continued)

- Rotunda 0-220°F Dial Thermometer 023-R0007 or equivalent
- Rotunda 120 Watt UV Light 164-R0721 or equivalent

Service Gauge Port Valves

These valves are quick-connect fittings. The service valve in the A/C compressor to condenser discharge line (19972) allows access to the high-pressure side of the system for attaching a service hose and pressure gauge when combined with Rotunda R-134a High-Side Quick Disconnect 176-R0037 or equivalent. The service valve in the evaporator to compressor suction line (19867) allows access to the low-pressure side of the system for attaching a service hose and pressure gauge when combined with Rotunda R-134a Low-Side Quick Disconnect 176-R0036 or equivalent.

DIAGNOSIS AND TESTING

Electrical Schematic Reference(s)

Refer to Electrical and Vacuum Troubleshooting Manual, Cell 53, Heater for schematic and connector information.

Climate Control System

Inspection and Verification

It is possible to detect problem causes by a careful visual inspection of the air conditioner refrigerant system. This includes broken drive belt (8620), obstructed air passages, a loose A/C clutch (2884), loose or broken mounting brackets, disconnected or broken wires and many refrigerant leaks.

A refrigerant leak will usually appear as an oily residue at the leakage point in the system. The oily residue soon picks up dust or dirt particles from the surrounding air and appears greasy. Through time, this will build up and appear to be a heavy dirt-impregnated grease.

Ford has introduced a fluorescent tracer dye part number 112-R0040 into R-134a refrigerant systems to aid in locating A/C system leaks. This tracer dye is visible through the use of a Rotunda 120 Watt UV Light 164-R0721 or equivalent. Refer to Leak Tracer Dye in the Service Procedures portion of this section.

Most common leaks are caused by damaged or missing O-ring seals at the various hose and component connections. When these O-rings are replaced, lubricate the new O-rings with refrigerant oil. Be careful to keep shop towel lint from contaminating the internal surfaces of the connection. Leakage may occur at a spring lock coupling if the wrong O-rings are used at the coupling. Use **only** the O-rings listed in the Ford Master Parts Catalog for the spring lock coupling.

If the system contains no refrigerant or is extremely low on refrigerant, the A/C clutch will not engage for compressor operation. A rapid cycling A/C clutch is usually an indication that the system is low on refrigerant. Also, cycling will normally not occur when the engine is operating at curb idle speed.

Symptom Chart

Refer to Electrical and Vacuum Troubleshooting Manual for the connector numbers in the pinpoint tests.

Official Licensed Publication
Ford Motor Company

DIAGNOSIS AND TESTING (Continued)

CLIMATE CONTROL SYSTEM

Condition	Possible Source	Action
• Insufficient Heat	• Low engine coolant level. • Inoperative A/C electronic door actuator motor. • Damaged, pinched, collapsed, or improperly routed heater water hoses. • Engine overheating. • Plugged or partially plugged heater core.	• GO to Pinpoint Test A. • REFER to Section 03-03 in the Powertrain, Drivetrain Manual. • REFER to Component Test-Heater Core Test.
• Defrost Does Not Operate	• No vacuum to A/C-heater function selector switch. • A/C-heater function selector switch leaks. • Damaged/kinked/pinched vacuum hose(s). • Leaking/damaged vacuum control motor. • Leaking/damaged vacuum check valve. • Leaking/damaged vacuum reservoir. • Vacuum actuator arm not connected to door crank.	• GO to Pinpoint Test B.
• Insufficient A/C Cooling	• Restricted A/C evaporator core orifice. • Low refrigerant level. • Damaged/inoperative A/C cycling switch.	• GO to Pinpoint Test C.
• Blower Motor Does Not Operate	• Blown fuse. • Circuitry open/shorted. • Damaged/inoperative heater blower motor switch. • Damaged/inoperative blower motor.	• GO to Pinpoint Test D.
• No Operation in High Blower Setting	• Damaged/inoperative heater blower motor switch. • Circuitry open/shorted.	• GO to Pinpoint Test E.
• Blower Motor Operates in High Speed Only	• Damaged/inoperative heater blower motor switch. • Damaged/inoperative heater blower motor switch resistor. • Circuitry open/shorted.	• GO to Pinpoint Test F.
• A/C Does Not Operate/Does Not Operate Properly	• Blown fuse. • Damaged/inoperative A/C cycling switch. • Low refrigerant level. • Damaged/inoperative A/C-heater function selector switch. • Improper A/C clutch gap.	• GO to Pinpoint Test G.

Official Licensed Product Ford Motor Company

DIAGNOSIS AND TESTING (Continued)

Pinpoint Tests

NOTE: Use Rotunda 73 Digital Multimeter 105-R0051 or equivalent when performing electrical pinpoint tests.

PINPOINT TEST A: INSUFFICIENT HEAT

	Test Step	Result ▶	Action to Take
A1	CHECK ENGINE COOLANT LEVEL		
	• Allow engine cooling system to fully cool and check radiator coolant level. • **Is coolant level low?**	Yes ▶	FILL and BLEED engine cooling system. REFER to Section 03-03 in the Powertrain, Drivetrain Manual. RETEST system.
		No ▶	GO to **A2**.
A2	CHECK HEATER HOSE ROUTING AND CONDITION		
	• Check that heater water hoses are not crossed or routed incorrectly. Refer to Section 12-02 for heater hose routing. • Visually inspect condition of heater water hoses for pinched or collapsed conditions. • **Are heater water hoses in good condition and routed properly?**	Yes ▶	GO to **A3**.
		No ▶	SERVICE or REPLACE heater water hoses as necessary. RETEST system.
A3	CHECK COOLANT FLOW THROUGH HEATER CORE		
	• Start vehicle and allow to reach normal operating temperature. • Place temperature control knob in the full warm position. • Grasp inlet and outlet heater water hoses. Both heater water hoses should be warm to the touch due to coolant flowing through them. • **Do heater water hoses indicate coolant flow?**	Yes ▶	GO to **A4**.
		No ▶	FLUSH heater core to remove obstructions. RETEST system. If flushing does not correct condition, REPLACE heater core. RETEST system.
A4	TEST THERMOSTAT		
	• Start vehicle and allow to run for 10 minutes. • Feel the heater water hoses and the underside of the upper radiator hose. • **Are the heater water hoses and the upper radiator hose cool?**	Yes ▶	REPLACE thermostat. RETEST system.
		No ▶	GO to **A5**.
A5	CHECK TEMPERATURE CONTROL DOOR OPERATION		
	• Rotate temperature control knob from full warm to full cool and check temperature door for operation. • **Does temperature door operate correctly?**	Yes ▶	CHECK for head gasket leaks. REFER to Section 03-00 in the Powertrain, Drivetrain Manual for information on cylinder heads. SERVICE as necessary. RETEST system.
		No ▶	CHECK for binding, damaged or disconnected temperature door. SERVICE or REPLACE as necessary. RETEST system.

PINPOINT TEST B: DEFROST DOES NOT OPERATE

	Test Step	Result ▶	Action to Take
B1	CHECK SYSTEM AIRFLOW		
	• With engine running and blower on high, check system airflow in each function selector position to determine which position(s) have incorrect airflow. Refer to vacuum application chart under Component Tests for correct system airflow. • **Is airflow from the defroster outlets for all positions?**	Yes ▶	GO to **B2**.
		No ▶	GO to **B13**.
B2	CHECK VACUUM SUPPLY HOSE		
	• Check vacuum supply hose to be sure it is connected to both the engine manifold and vacuum check valve. • **Is hose disconnected?**	Yes ▶	RECONNECT hose. GO to **B1**.
		No ▶	GO to **B3**.

Official Licensed Product Ford Motor Company

DIAGNOSIS AND TESTING (Continued)

PINPOINT TEST B: DEFROST DOES NOT OPERATE (Continued)

Test Step		Result ▶	Action to Take
B3	CHECK VACUUM SUPPLY HOSE FOR LEAKS		
	• Disconnect vacuum supply hose from engine manifold fitting and from check valve. Plug one end of hose and leak test with vacuum pump. • **Does hose leak?**	Yes ▶ No ▶	REPLACE or SERVICE as necessary. GO to **B1**. CONNECT hose to manifold fitting. GO to **B4**.
B4	CHECK VACUUM CHECK VALVE		
	• Check vacuum check valve for correct installation by removing the reservoir hose and the control assembly source hose (one at a time) from check valve and check for vacuum. Engine must be running for this test. **VACUUM HOSE FROM ENGINE CONNECTED TO THIS FITTING** 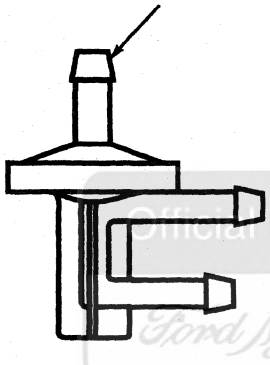 M4800-A • **Is vacuum available at both check valve ports?**	Yes ▶ No ▶	RECONNECT both hoses. GO to **B6**. GO to **B5**.
B5	INSPECT VACUUM CHECK VALVE		
	• Inspect vacuum check valve for an obstruction and proper operation. Airflow through the check valve should be in the direction toward engine (engine connection side is marked VAC). • **Is check valve plugged or obstructed?**	Yes ▶ No ▶	REPLACE check valve. GO to **B1**. GO to **B6**.

Official Licensed Product
Ford Motor Company

DIAGNOSIS AND TESTING (Continued)

PINPOINT TEST B: DEFROST DOES NOT OPERATE (Continued)

Test Step		Result ▶	Action to Take
B6	LEAK TEST VACUUM CHECK VALVE		
	• Remove vacuum check valve from vehicle. Connect 2 hoses and a tee fitting to outlet ports of check valve. Connect Rotunda Vacuum Tester 014-R1054 or equivalent to tee fitting.	Yes ▶	REPLACE check valve. GO to **B1**.
		No ▶	REINSTALL check valve and GO to **B7**.
	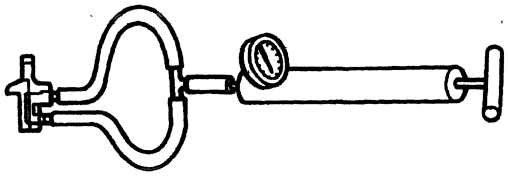 M5001-A		
	• Pump 15 inches vacuum on check valve and observe gauge reading. If vacuum loss exceeds 1 inch per minute, remove check valve from tester and plug vacuum hoses. Pull a vacuum with the tester to be certain hoses and tester are not cause of leak.		
	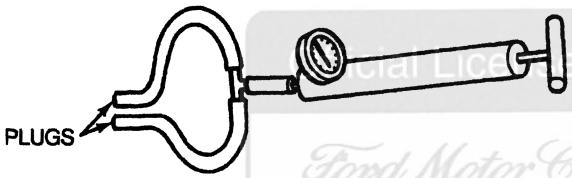 M5002-A		
	• If tester and hoses do not leak, check valve is cause of leak. • **Does check valve lose more than 1 in. vacuum in one minute?**		
B7	CHECK VACUUM RESERVOIR		
	• Connect vacuum tester to vacuum reservoir and leak test reservoir. Reservoir must hold vacuum. • **Does reservoir leak?**	Yes ▶	REPLACE reservoir. GO to **B1**.
		No ▶	CONNECT hose to reservoir. GO to **B8**.
B8	CHECK SUPPLY HOSE FOR LEAK		
	• Disconnect and plug black supply hose at control assembly. Disconnect other end of supply hose from check valve and leak test hose with vacuum tester. • **Does supply hose leak?**	Yes ▶	SERVICE or REPLACE hose. GO to **B1**.
		No ▶	REMOVE plug and RECONNECT vacuum hose. GO to **B9**.
B9	CHECK CONTROL ASSEMBLY		
	• Disconnect vacuum harness at in-line multiple connector near control. Plug all vacuum hoses except black. Connect vacuum tester to black hose. Select each function position, apply 15 in. vacuum and check for vacuum drop. Drop should not exceed 1 in. vacuum per minute for any function position. • **Does drop exceed 1 in. vacuum per minute?**	Yes ▶	NOTE function positions where vacuum drops. GO to **B10**.
		No ▶	GO to **B11**.
B10	LEAK TEST CONTROL ASSEMBLY		
	• Remove vacuum harness from control assembly. Connect vacuum tester to control supply port and plug control port that indicated a leak in Step B9. Select function positions noted in Step B9 and apply 15 in. vacuum after selecting each position. Vacuum drop should not exceed 1/2 inch per minute. • **Does vacuum drop exceed 1/2 inch in one minute?**	Yes ▶	REPLACE control assembly. GO to **B1**.
		No ▶	GO to **B12**.

Ford Motor Company

DIAGNOSIS AND TESTING (Continued)

PINPOINT TEST B: DEFROST DOES NOT OPERATE (Continued)

Test Step		Result ▶	Action to Take
B11	CHECK SUPPLY HOSE		
	• Disconnect black supply hose from check valve. Connect vacuum tester to supply hose and operate tester as if pulling a vacuum. If tester can pull a vacuum, hose is plugged. If tester pulls a partial vacuum, hose is restricted. • **Is hose plugged or restricted?**	Yes ▶ No ▶	REPLACE supply hose. GO to **B1**. GO to **B15**.
B12	LEAK TEST JUMPER VACUUM HARNESS		
	• Plug one end of vacuum hose that indicated a leak in Step B9. Apply 15 in. vacuum to hose and observe vacuum gauge. Vacuum should not drop. • **Does vacuum drop?**	Yes ▶ No ▶	SERVICE or REPLACE vacuum jumper harness. GO to **B1**. CHECK connection of vacuum harness to control assembly for leak. SERVICE as necessary. GO to **B1**.
B13	EVALUATE SYSTEM AIRFLOW		
	• **Is the airflow in Step B1 correct for each function position?**	Yes ▶ No ▶	GO to **B14**. GO to **B15**.
B14	ISOLATE LEAKING VACUUM CIRCUIT		
	• Repeat step B1 and accelerate engine speed for each function position. • **Does airflow go to defrost during acceleration?**	Yes ▶ No ▶	GO to **B19**. GO to **B15**.
B15	REVIEW VEHICLE HISTORY		
	• **Did system function properly prior to this complaint?**	Yes ▶ No ▶	GO to **B18**. GO to **B16**.
B16	CHECK VACUUM HOSES		
	• Check each vacuum hose to be sure it is not plugged. • **Is a hose plugged?**	Yes ▶ No ▶	SERVICE or REPLACE as necessary. GO to **B1**. GO to **B17**.
B17	CHECK VACUUM HARNESS		
	• Compare vacuum hose colors in each vacuum harness to the vacuum schematic. • **Do the hose colors agree with the schematic?**	Yes ▶ No ▶	GO to **B18**. REPLACE vacuum harness. GO to **B1**.
B18	CHECK VACUUM CIRCUIT		
	• Check vacuum circuit for pinched or kinked vacuum hose. • **Is hose pinched or kinked?**	Yes ▶ No ▶	SERVICE as necessary. GO to **B1**. GO to **B19**.
B19	CHECK VACUUM CIRCUIT CONNECTION		
	• Check each vacuum hose connection to determine if it is partially connected or disconnected. • **Is a vacuum hose connection disconnected or partially connected?**	Yes ▶ No ▶	RECONNECT hose. GO to **B1**. GO to **B20**.
B20	CHECK VACUUM HOSE		
	• Disconnect both ends of vacuum hose in suspected circuit. Plug one end and leak test with vacuum tester. • **Does vacuum hose leak?**	Yes ▶ No ▶	SERVICE or REPLACE hose. GO to **B1**. GO to **B21**.
B21	CHECK VACUUM MOTOR		
	• Check vacuum motor for leaks with vacuum tester. • **Does motor hold vacuum?**	Yes ▶ No ▶	GO to **B22**. REPLACE vacuum motor. GO to **B1**.

Ford Motor Company Licensed Product

DIAGNOSIS AND TESTING (Continued)

PINPOINT TEST B: DEFROST DOES NOT OPERATE (Continued)

Test Step		Result ▶	Action to Take
B22	CHECK VACUUM MOTOR INSTALLATION		
	• Check attachment of vacuum motor arm to damper door. • **Is motor arm attached to door or door crank arm?**	Yes ▶	CHECK for binding or damaged damper door. SERVICE as necessary. GO to **B1**.
		No ▶	CONNECT motor arm to door or crank arm and CHECK operation. GO to **B1**.

PINPOINT TEST C: INSUFFICIENT A/C COOLING

Test Step		Result ▶	Action to Take
C1	CHECK A/C COMPRESSOR CLUTCH		
	• **Does the A/C clutch engage?**	Yes ▶	GO to **C2**.
		No ▶	REFER to Pinpoint Test G in this section.
C2	CHECK PRESSURE/CYCLE RATE		
	• Use refrigerant system pressure/cycle and timing evaluation charts. — Hook up gauge set. — Set function lever at MAX A/C. — Set heater blower motor switch on HIGH. — Set temperature lever full cool. — Close doors and windows. — Use a thermometer to check temperature at the center discharge register. Record outside temperature. — Run engine at approximately 1500 rpm with A/C clutch engaged. — Stabilize with above conditions for 10-15 minutes with interior temperature between 21.1-26.7°C (70-80°F). • Check off/on time of A/C clutch with watch. See charts for normal cycle and timing rates. • **Does A/C compressor cycle very rapidly?**	Yes ▶	GO to **C4**.
		No ▶	GO to **C3**.
C3	CHECK PRESSURES		
	Check system pressures. • Compare readings with normal system pressure ranges. • **Does A/C compressor cycle within limits?**	Yes ▶	System OK. GO to **C1**.
		No ▶	GO to System Pressure and Cycle Timing Evaluation Charts and COMPARE observed pressures with chart. REFER to Refrigerant System Tests in the Service Procedures portion of this section. If A/C compressor cycles high or low, ON above 259 kPa (52 psi), OFF below 144 kPa (21 psi), GO to **C4**.
C4	CHECK FOR LEAKS		
	• Leak check system. • **Are there leaks in system?**	Yes ▶	SERVICE, LEAK TEST, EVACUATE and CHARGE system. System OK. GO to **C1**.
		No ▶	Low refrigerant charge or moisture in system. DISCHARGE, EVACUATE and CHARGE system.

Ford Motor Company Proprietary Product

DIAGNOSIS AND TESTING (Continued)

PINPOINT TEST D: BLOWER MOTOR DOES NOT OPERATE

Test Step		Result	Action to Take
D1	CHECK BLOWER MOTOR OPERATION		
	• Key to RUN. • Set A/C-heater function selector switch to FLOOR. • Set heater blower motor switch to HIGH. • **Does blower motor operate?**	Yes ▶ No ▶	CHECK for intermittent operation. SERVICE if necessary. RESTORE vehicle. TEST for normal operation. GO to **D2**.
D2	CHECK VOLTAGE AT A/C-HEATER FUNCTION SELECTOR SWITCH		
	• Move the climate control assembly to gain access to electrical connectors. • Set A/C-heater function selector switch to each operation position. • Key to RUN. • Measure the voltage between the A/C-heater function selector switch connector C296, Circuit 181 (BR/O) and ground in each operation position. • **Is the voltage greater than 10 volts in each operation position?**	Yes ▶ No ▶	GO to **D4**. GO to **D3**.
D3	CHECK A/C-HEATER FUNCTION SELECTOR SWITCH		
	• Key to RUN. • Measure the voltage between the A/C-heater function selector switch connector C296, Circuit 399 (BR/Y) and ground. • **Is the voltage greater than 10 volts?**	Yes ▶ No ▶	MEASURE the resistance between the A/C-heater function selector switch terminals in each operation position. REPLACE A/C-heater function selector switch if necessary. RESTORE vehicle. TEST system for normal operation. CHECK Circuit 399 (BR/Y) for short/open. SERVICE as necessary. RESTORE vehicle. TEST system for normal operation.
D4	CHECK BLOWER MOTOR SUPPLY VOLTAGE		
	• Key to OFF. • Install the climate control assembly. • Disconnect the blower motor connector C168. • Set the A/C-heater function selector switch to FLOOR. • Key to RUN. • Measure the voltage between the blower motor connector C168, Circuit 181 (BR/O) and ground. • **Is the voltage greater than 10 volts?**	Yes ▶ No ▶	GO to **D5**. SERVICE Circuit 181 (BR/O). RESTORE vehicle. TEST system for normal operation.
D5	CHECK BLOWER MOTOR		
	• Key to OFF. • Perform blower motor component test. • **Does blower motor meet specifications shown in component test?**	Yes ▶ No ▶	GO to **D6**. REPLACE blower motor. RESTORE vehicle. TEST system for normal operation.
D6	CHECK CIRCUIT 261 (O/BK).		
	• Disconnect the heater blower motor switch resistor connector C169. • Disconnect the heater blower motor switch connector C260. • Measure the resistance between blower motor connector C168, Circuit 261 (O/BK) and heater blower motor switch connector C260, Circuit 261 (O/BK). • Measure the resistance between blower motor connector C168, Circuit 261 (O/BK) and heater blower motor switch resistor connector C169, Circuit 261 (O/BK). • **Is the resistance less than 5 ohms?**	Yes ▶ No ▶	GO to **D7**. SERVICE Circuit 261 (O/BK). RESTORE vehicle. TEST system for normal operation.

Official Licensed Product
Ford Motor Company

DIAGNOSIS AND TESTING (Continued)

PINPOINT TEST D: BLOWER MOTOR DOES NOT OPERATE (Continued)

Test Step		Result ▶	Action to Take
D7	CHECK HEATER BLOWER MOTOR SWITCH		
	• Connect the heater blower motor connector C168. • Connect the heater blower motor switch resistor connector C169. • Measure the resistance between the heater blower motor switch terminals. Refer to Electrical and Vacuum Troubleshooting Manual Cell 149, Component Testing. • **Does the resistance meet the specifications in the component test?**	Yes ▶ No ▶	SERVICE Circuit 57 (BK). RESTORE vehicle. TEST system for normal operation. REPLACE heater blower motor switch. RESTORE vehicle. TEST system for normal operation.

PINPOINT TEST E: NO OPERATION IN HIGH BLOWER SETTING

Test Step		Result ▶	Action to Take
E1	CHECK BLOWER MOTOR OPERATION		
	• Key to RUN, function selector knob to FLOOR and blower knob to first position from HI. • **Does blower motor operate?**	Yes ▶ No ▶	CHECK for an intermittent problem. RESTORE vehicle. TEST system for normal operation. GO to **E2**.
E2	CHECK BLOWER SWITCH		
	• Measure the resistance between the heater blower motor switch terminals. Refer to Electrical and Vacuum Troubleshooting Manual Cell 149, Component Testing. • **Does the resistance meet the specifications in the component test?**	Yes ▶ No ▶	SERVICE Circuit 261 (O/BK). RESTORE vehicle. REPLACE heater blower motor switch. TEST system for normal operation.

Official Licensed Product

PINPOINT TEST F: BLOWER MOTOR OPERATES IN HIGH SPEED ONLY

Test Step		Result ▶	Action to Take
F1	CHECK BLOWER OPERATION		
	• Key to RUN, function selector knob to FLOOR and blower knob at LO. • **Does blower motor operate?**	Yes ▶ No ▶	GO to **F5**. GO to **F2**.
F2	CHECK BLOWER SWITCH HIGH SPEED		
	• Slowly move blower knob from LO to HI. Stop at each detent and check for blower operation. • **Does blower motor operate in any speed except HI?**	Yes ▶ No ▶	GO to **F4**. GO to **F3**.
F3	CHECK GROUND CIRCUIT		
	• Check Circuit 57 (BK) from heater blower motor switch resistor to ground for an open. • **Is ground wire open?**	Yes ▶ No ▶	SERVICE / REPLACE as required. REPLACE heater blower motor switch resistor.
F4	CHECK CIRCUIT		
	• Check Circuit 261 (O/BK wire) between blower motor and heater blower motor switch resistor for open. • **Is circuit open?**	Yes ▶ No ▶	SERVICE as necessary and CHECK blower motor operation. REPLACE heater blower motor switch resistor.
F5	CHECK BLOWER SWITCH		
	• Check blower motor operation several times in each blower knob position. • **Does blower motor operate in all knob positions without interruption?**	Yes ▶ No ▶	CHECK system operation in all function positions and blower speeds. If OK, INSTRUCT owner on correct operation of system. GO to **F6**.

DIAGNOSIS AND TESTING (Continued)

PINPOINT TEST F: BLOWER MOTOR OPERATES IN HIGH SPEED ONLY (Continued)

Test Step		Result ▶	Action to Take
F6	CHECK BLOWER SWITCH CONTINUITY		
	• Disconnect heater blower motor switch connector C168. • Measure resistance between heater blower motor switch terminals. Refer to Electrical and Vacuum Troubleshooting Manual Cell 149, Component Testing. • **Does the resistance meet the specifications in the component test?**	Yes ▶	CHECK continuity of Circuit 754 (LG/W) and Circuit 752 (Y/R) between blower switch and resistor assembly. SERVICE as required.
		No ▶	REPLACE heater blower motor switch.

PINPOINT TEST G: A/C DOES NOT OPERATE/DOES NOT OPERATE PROPERLY

Test Step		Result ▶	Action to Take
G1	CHECK THE A/C CLUTCH OPERATION		
	• NOTE: The outside air temperature must be above 10°C (50°F) for A/C compressor operation. Key to START. • Set the A/C-heater function control switch to MAX A/C. • Set heater blower motor switch to HIGH. • Observe the A/C clutch for proper operation. • **Does the A/C clutch engage?**	Yes ▶	CHECK for an intermittent problem. RESTORE vehicle. RETEST the system.
		No ▶	GO to **G2**.
G2	CHECK THE A/C CYCLING SWITCH		
	• Key OFF. • Disconnect the A/C cycling switch connector C162. • Install a jumper wire between the A/C cycling switch connector C162, Circuits 348 (P) and 441 (R/Y). • **WARNING: CARBON MONOXIDE IS COLORLESS, ODORLESS AND DANGEROUS. IF IT IS NECESSARY TO OPERATE THE ENGINE WITH THE VEHICLE IN A CLOSED AREA SUCH AS A GARAGE, ALWAYS USE AN EXHAUST COLLECTOR TO VENT THE EXHAUST GASES OUTSIDE OF THE CLOSED AREA.** • Key to START. • Set the A/C-heater function selector switch to NORM A/C. • Set the heater blower motor switch to HIGH. • Check for A/C clutch engagement. • **Does the A/C clutch engage?**	Yes ▶	GO to **G3**.
		No ▶	GO to **G4**.
G3	CHECK REFRIGERANT SYSTEM PRESSURE		
	• Key to OFF. • Connect the A/C cycling switch connector C162. • Install the R134a manifold gauge set. Refer to A/C Manifold Gauge Set Connection in the Service Procedures portion of this section. • Measure the refrigerant system pressure. • **Is the refrigerant system pressure greater than 50 psi?**	Yes ▶	REPLACE the A/C cycling switch. REFER to Section 12-03A. RESTORE the vehicle. RETEST the system.
		No ▶	CHECK the system for leaks. REFER to Checking for A/C Leaks in the Service Procedures portion of this section.
G4	CHECK VOLTAGE AT A/C CYCLING SWITCH		
	• Key to OFF. • Set the A/C-heater function selector switch to MAX A/C. • Key to RUN. • Measure the voltage between the A/C cycling switch connector C162, Circuit 348 (P) and ground. • **Is the voltage greater than 10 volts?**	Yes ▶	GO to **G5**.
		No ▶	GO to **G11**.

Official Licensed Product

DIAGNOSIS AND TESTING (Continued)

PINPOINT TEST G: A/C DOES NOT OPERATE/DOES NOT OPERATE PROPERLY (Continued)

Test Step		Result ▶	Action to Take
G5	CHECK VOLTAGE AT A/C PRESSURE CUTOFF SWITCH		
	• Key to OFF. • Connect the A/C cycling switch connector C162. • Disconnect the A/C pressure cutoff switch connector C162. • Set the A/C-heater function selector switch to MAX A/C. • Key to RUN. • Measure the voltage between the A/C pressure cutoff switch connector C126, Circuit 441 (R/Y) (diesel) or Circuit 347 (BK/Y) (gasoline) and ground. • **Is the voltage greater than 10 volts?**	Yes ▶ No ▶	GO to **G6**. SERVICE Circuits 441 (R/Y) (diesel) or 347 (BK/Y) (gasoline). RESTORE the vehicle. RETEST the system.
G6	MEASURE A/C PRESSURE CUTOUT SWITCH CONTACT RESISTANCE		
	• Key to OFF. • Measure the resistance between the A/C pressure cut-off switch Circuit 441 (R/Y) (diesel) or Circuit 347 (BK/Y) (gasoline) and Circuit 198 (DG/O). • **Is the resistance less than 5 ohms?**	Yes ▶ No ▶	GO to **G7**. REPLACE the A/C pressure cut-off switch. REFER to Section 12-03A. RESTORE the vehicle. RETEST the system.
G7	CHECK VOLTAGE SUPPLY TO A/C CLUTCH		
	• Connect the A/C pressure cut-off switch connector C126. • Disconnect the A/C clutch connector C163. • Key to RUN. • Set the A/C-heater function selector switch to MAX A/C. • Measure the voltage between the A/C clutch connector C163, Circuit 321 (GY/W) and ground. • **Is the voltage greater than 10 volts?**	Yes ▶ No ▶	GO to **G8**. SERVICE Circuit 321 (GY/W). RESTORE the vehicle. RETEST the system.
G8	CHECK A/C CLUTCH GROUND CIRCUIT		
	• Key to OFF. • Measure the resistance between the A/C clutch connector C163, Circuit 57 (BK) and ground. • **Is the resistance less than 5 ohms?**	Yes ▶ No ▶	GO to **G9**. SERVICE Circuit 57 (BK). RESTORE the vehicle. RETEST the system.
G9	CHECK A/C CLUTCH FIELD COIL RESISTANCE		
	• Measure the resistance between the A/C clutch field coil terminal 1 and terminal 2. • **Is the resistance greater than 6 ohms?**	Yes ▶ No ▶	REPLACE the A/C clutch field coil. REFER to Section 12-03B or Section 12-03C. RESTORE the vehicle. RETEST the system. GO to **G10**.
G10	CHECK A/C CLUTCH FIELD COIL CURRENT DRAW		
	• Key to RUN. • Install a jumper wire between the A/C clutch, Circuit 321 (GY/W) and the A/C clutch connector C163, Circuit 321 (GY/W). • Install a jumper wire at A/C clutch, Circuit 57 (BK). • **WARNING: ALWAYS USE JUMPER WIRES WHEN MEASURING THE A/C CLUTCH FIELD COIL AMPERAGE DRAW OR SERIOUS INJURY CAN OCCUR.** Measure the current draw between the A/C clutch connector C163, Circuit 57 (BK) and the A/C clutch jumper wire. • **Is the current draw between 2.5-4.5 amperes (FSID) or 3.6-3.7 amperes (SD-7H15)?**	Yes ▶ No ▶	ADJUST the A/C clutch field coil air gap. REFER to Section 12-03B or Section 12-03C. RESTORE the vehicle. RETEST the system. REPLACE the A/C clutch field coil. REFEr to Section 12-03B or Section 12-03C. RESTORE the vehicle. RETEST the system.

Official Licensed Product Ford Motor Company

DIAGNOSIS AND TESTING (Continued)

PINPOINT TEST G: A/C DOES NOT OPERATE/DOES NOT OPERATE PROPERLY (Continued)

Test Step		Result ▶	Action to Take
G11	CHECK VOLTAGE AT A/C-HEATER FUNCTION SELECTOR SWITCH		
	• Key to OFF. • Disconnect the A/C-heater function selector switch connector C296. • Key to RUN. • Measure the voltage between the A/C-heater function selector switch connector C296, Circuit 182 (BR/W) and ground. • **Is the voltage greater than 10 volts?**	Yes ▶ No ▶	GO to **G13**. GO to **G12**.
G12	CHECK THE FUSE		
	• Key to OFF. • Check the A/C-heater function selector switch fuse (15A). • **Is the fuse good?**	Yes ▶ No ▶	CHECK for a short/open in Circuit 182 (BR/W). SERVICE Circuit 182 (BR/W) as necessary. RESTORE the vehicle. RETEST the system. REPLACE the A/C-heater function selector switch fuse (15A). RETEST the system. If the fuse blows again, CHECK Circuits 182 (BR/W), 348 (P), 441 (R/Y), 347 (BK/Y), 198 (DG/O), 321 (GY/W) for a short. SERVICE damaged circuits as necessary. RESTORE the vehicle. RETEST the system.
G13	CHECK A/C-HEATER FUNCTION SELECTOR CONTROL SWITCH POSITIONS		
	• Connect the A/C-heater function selector switch connector C296. • Key to RUN. • Set the A/C-heater function selector switch to each function position. • NOTE: The A/C-heater function selector switch connector is shown disconnected for clarity. The voltage measurement will be taken from the back of the connector with it connected to the A/C-heater function selector switch. Measure the voltage between the A/C-heater function selector switch, Circuit 348 (P) and ground. • **Is the voltage greater than 10 volts?**	Yes ▶ No ▶	SERVICE Circuit 348 (P). RESTORE the vehicle. RETEST the system. REPLACE the A/C-heater function selector switch. REFER to Section 12-02 or Section 12-03A. RESTORE the vehicle. RETEST the system.

Ford Motor Company Licensed Product

Component Tests

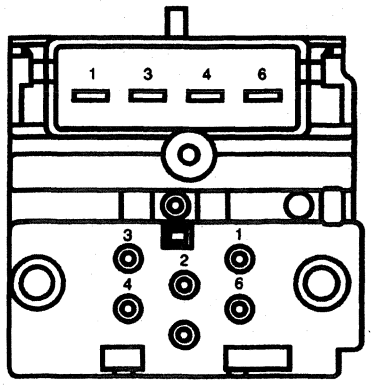

CONTROL FUNCTION SELECTOR SWITCH

M4797-A

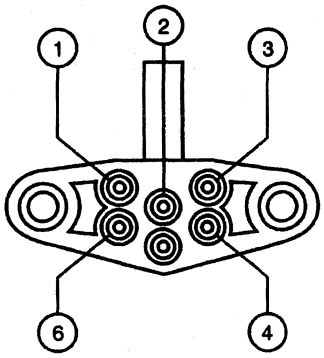

DM0049-A

DIAGNOSIS AND TESTING (Continued)

MANUAL A/C-HEATER VACUUM APPLICATION CHART

Function Selector Switch Vacuum Application								
Vacuum Port and Hose Color	Function (Vacuum Motor)	Detent Position						
		Max A/C	Norm A/C	Vent	Off	Floor	Mix	Def
1 — Yellow	Floor-Panel	V	V	V	V	V	V	A
2 — Black	Source	V	V	V	V	V	V	V
3 — Blue	Panel-Defrost	V	V	V	A	A	A	A
4 — White	Outside-Recirc.	V	A	A	V	A	A	A
5	Not Used	—	—	—	—	—	—	—
6 — Red	Full-Floor	V	V	V	V	V	A	A

STANDARD HEATER ONLY VACUUM APPLICATION CHART

Function Selector Switch Vacuum Application						
Vacuum Port and Hose Color	Function (Vacuum Motor)	Detent Position				
		Vent	Floor	Off	Mix	Def
1 — Yellow	Floor-Panel	V	V	V	V	A
2 — Black	Source	V	V	V	V	V
3 — Blue	Panel-Defrost	V	A	A	A	A
4 — White	Outside-Recirc.	A	A	V	A	A
5	Not Used	—	—	—	—	—
6 — Red	Full-Floor	V	V	V	A	A

Official Licensed Product Ford Motor Company

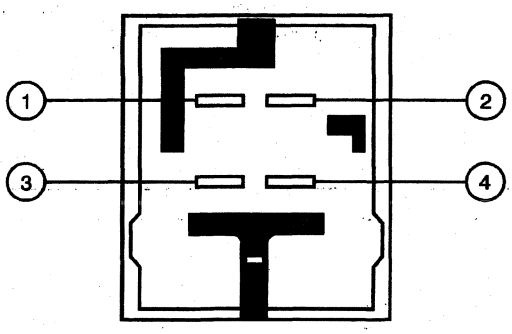

DM0282-A

HEATER BLOWER MOTOR SWITCH

To Test	Measure the Resistance Between	Set the Switch to These Positions	Resistance Should Read
High Speed	Terminal 1, Circuit 261 and Terminal 2, Circuit 57	Low Med-Low Med-High High	Greater than 10,000 ohms Greater than 10,000 ohms Greater than 10,000 ohms Less than 5 ohms
Med-High Speed	Terminal 1, Circuit 261 and Terminal 3, Circuit 752	Low Med-Low Med-High High	Greater then 10,000 ohms Greater than 10,000 ohms Less than 5 ohms Greater than 10,000 ohms

(Continued)

DIAGNOSIS AND TESTING (Continued)

HEATER BLOWER MOTOR SWITCH (Cont'd)

To Test	Measure the Resistance Between	Set the Switch to These Positions	Resistance Should Read
Med-Low Speed	Terminal 1, Circuit 261 and Terminal 4, Circuit 754	Low Med-Low Med-High High	Greater than 10,000 ohms Less than 5 ohms Greater than 10,000 ohms Greater than 10,000 ohms
Low Speed	Terminal 1, Circuit 261 and any other position	Low Med-Low Med-High High	Greater than 10,000 ohms Greater than 10,000 ohms Greater than 10,000 ohms Greater than 10,000 ohms

Heater Core, Plugged

Make sure the engine coolant is at the proper level, then start the engine and let it run until it is warmed to operating temperature. Turn on the heater and feel the inlet and outlet heater water hoses to the heater core. If the inlet heater water hose is hot and outlet heater water hose is cooler, the heater core might be plugged.

NOTE: Make sure an appropriate container is used to collect any coolant that is lost during the heater core bleed procedure.

To bleed air from heater core, remove the hose at the outlet connection of the heater core (hose leading to the water pump). Allow any trapped air to flow out. When a continuous flow of coolant is obtained, connect the hose to the core. Do not overtighten heater hose clamps.

Heater Core Pressure Test

1. Drain the cooling system.
2. Disconnect the heater water hoses from the heater core. If constant tension clamps are used, be sure they are properly positioned.
3. Install a short piece of heater water hose (approximately 100 mm [4 inches] long) onto each tube of the heater core.

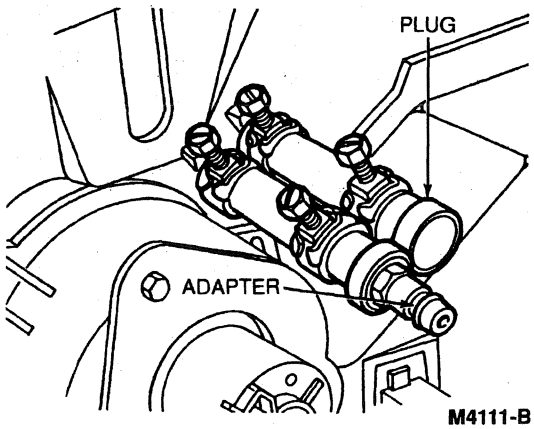

M4111-B

4. Fill the heater core and heater water hoses with water and install Plug BT-7422-B and Adapter BT-7422-A from Radiator / Heater Core Pressure Tester 014-R1069 or equivalent in the ends of the heater water hoses. Secure the heater water hoses to the heater core, plug and adapter with clamps.

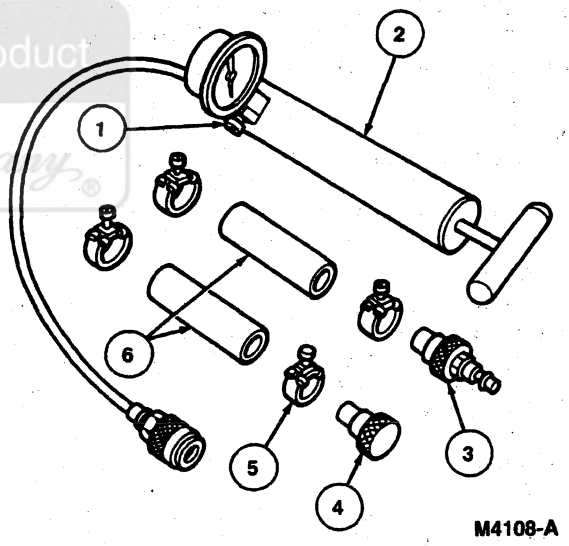

M4108-A

Item	Part Number	Description
1	—	Bleed Valve (Part of 014-R1069)
2	014-R1069	Radiator / Heater Core Pressure Tester
3	7422	Adapter B
4	7422	Plug
5	8287	Hose Clamp
6	18C266	Heater Hose (4 Inches Long)

Official Licensed Product

DIAGNOSIS AND TESTING (Continued)

5. Attach Radiator / Heater Core Pressure Tester 014-R1069 or equivalent to the adapter. Close the bleed valve at the base of the gauge and pump 207 kPa (30 psi) of air pressure into the heater core.

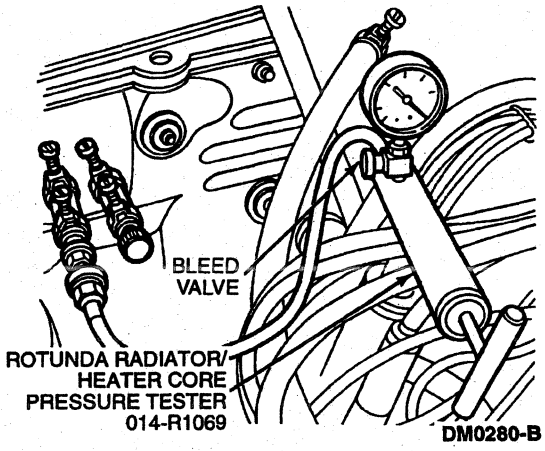

6. Observe the pressure gauge for a minimum of three minutes. The pressure should not drop.
7. If the pressure does not drop, no leaks are indicated.
8. If the pressure drops, check the connections at the core for leaks. If the heater water hoses do not leak, remove the heater core from the vehicle. Refer to Section 12-02. Test the heater core as described in this section.

Blower Motor

To test the blower motor, connect a No. 10 (or larger diameter) jumper wire directly from the positive battery terminal to the positive lead of the blower motor. If the blower motor runs, the concern must be external to the blower motor. If the blower motor will not run, connect a No. 10 (or larger diameter) jumper wire from the ground lead of the blower motor to a good ground. If the blower motor runs, the fault is in the ground circuit. If after testing the positive and negative sides of the blower motor, the blower motor still will not run, the blower motor must be replaced.

Blower Motor Resistor

To test the blower heater blower motor switch resistor as well as the internal thermal limiter, check continuity for shorts or opens with a self-powered test lamp. If the unit indicates an open or short, it cannot be repaired and will require replacement.

Vacuum Leak Diagnosis

The air handling system is designed to provide defrost when no vacuum is applied to any of the three air door vacuum motors. This is done to prevent a situation where defrost cannot be obtained due to a system vacuum leak. Instead, a leak in the vacuum control circuit will send all airflow to the defroster outlets. This condition may occur during acceleration (slow leak), may exist at all times (large leak) and may happen only when certain specific functions are selected, indicating a leak in that portion of the circuit.

The vacuum hoses used in the passenger compartment control circuit are constructed from PVC plastic material. The vacuum hoses used in the engine compartment are constructed of Hytrel. Because of the materials used, the vacuum hoses should never be pinched off during diagnosis to locate a leak. Use Rotunda Vacuum Tester 014-R1054 or equivalent to locate vacuum leaks. A wood golf tee can be used as a plug when it is necessary to plug one end of a vacuum hose for leak test purposes.

SERVICE PROCEDURES

Refrigerant System Tests

Poor air conditioning system performance can be caused by an obstructed A / C evaporator core (19860). Airflow is restricted.

This condition can be detected by checking the center register discharge temperature. An abnormally low temperature indicates air is spending more time in the A / C evaporator core and is very cold when discharged, although the airflow volume is not enough to cool the vehicle properly.

Additional cause components are listed at the bottom of the chart for poor compressor operation or a damaged compressor condition.

These diagnosis charts provide the most direct and sure way to determine the cause of any problem in a poorly performing refrigerant system.

After servicing and correcting a refrigerant system concern, take additional pressure readings and observe the cycle rate while meeting the conditional requirements to be sure the concern has been corrected.

To diagnose a problem in the refrigerant system, note the system pressure (shown by the gauges) and the clutch cycle rate. Then compare readings with the charts.

To achieve accurate results in the least amount of time, use the following procedure and refer to the charts.

NOTE: The test conditions specified at the top of each of the charts must be met to obtain accurate test results.

1. Connect a gauge set to the system.
2. When system has stabilized, record high and low pressures as shown by gauges.

Official Licensed Product

SERVICE PROCEDURES (Continued)

3. Determine cycle rate per minute (ON time plus OFF time is one cycle).
4. Record OFF time in seconds.
5. Record ON time in seconds.
6. Note center register discharge temperature.
7. Determine and record ambient temperature.
8. Compare test readings and appropriate chart.
   - Plot a vertical line for recorded ambient temperature from scale at bottom of each chart to top of chart.
   - Plot a horizontal line for other test readings from scale at left side of appropriate chart.

If the point where the two lines cross on each chart falls within the dark band, the system is operating normally. If the lines cross outside the dark band on one or more of the charts, there is a problem and the specific cause must be determined. Refer to the following System Pressure and Cycle Timing Evaluation Charts.

- System high (discharge) — pressure is high, low or normal.
- System low (suction) — pressure is high, low or normal.
- Cycle rate is fast, slow or A/C clutch (2884) runs continuously.
- ON time is long or short.
- OFF time is long or short.

System Pressure and Cycle Timing Evaluation Charts

NORMAL CLUTCH CYCLE RATE PER MINUTE

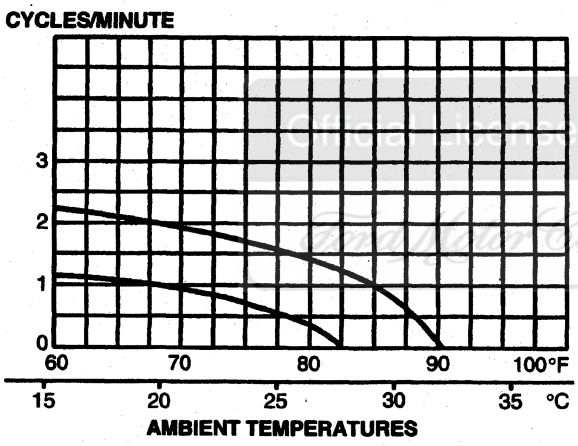

NORMAL CENTER REGISTER DISCHARGE TEMPERATURES

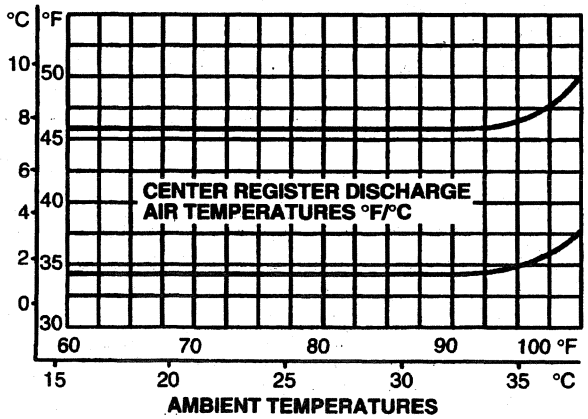

THESE CONDITIONAL REQUIREMENTS FOR THE FIXED ORIFICE TUBE CYCLING CLUTCH SYSTEM TESTS MUST BE SATISFIED TO OBTAIN ACCURATE PRESSURE READINGS.

- STABILIZED IN VEHICLE TEMPERATURES @ 70° TO 80°F (21° TO 27°C)
- MAXIMUM A/C (RECIRCULATING AIR)
- MAXIMUM BLOWER SPEED
- 1500 ENGINE RPM FOR 10 MINUTES

NORMAL FIXED ORIFICE TUBE CYCLING CLUTCH REFRIGERANT SYSTEM

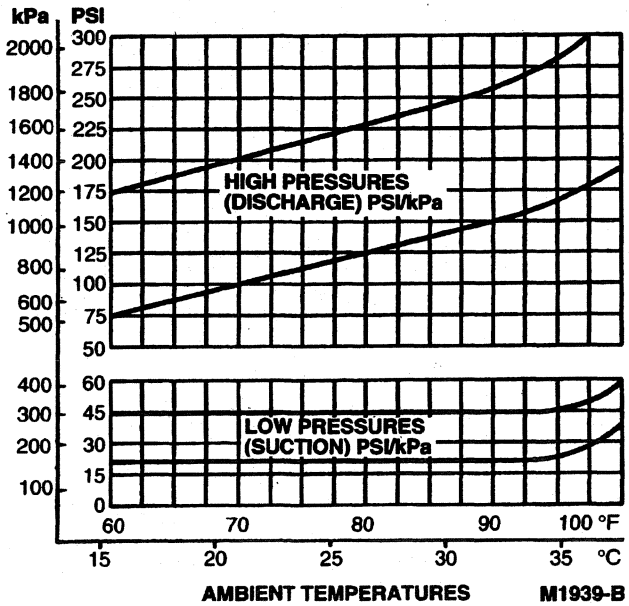

SERVICE PROCEDURES (Continued)

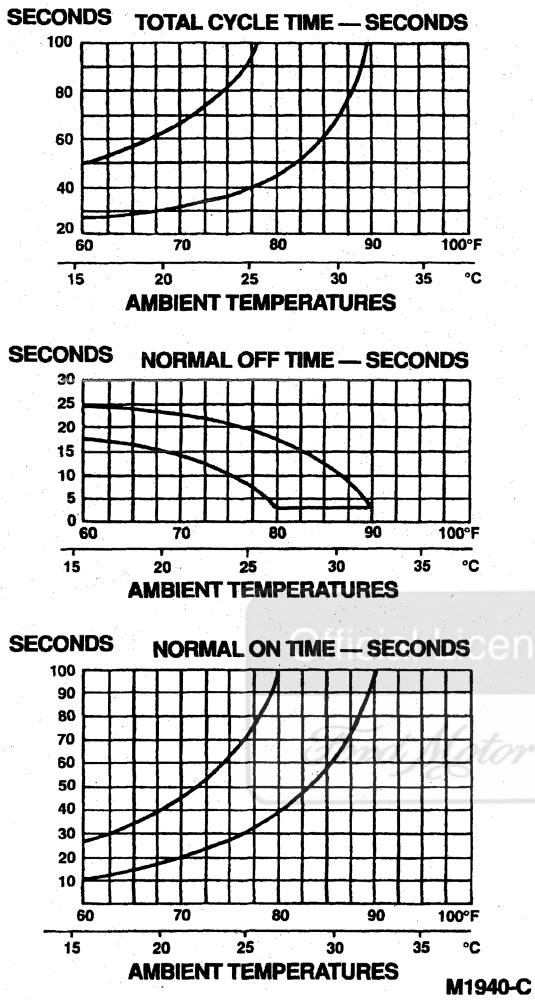

M1940-C

Match these conditions to the conditions shown in the first five columns in the following Refrigerant System Pressure and Cycle Timing Evaluation Chart for A/C Evaporator Core Orifice Cycling Systems. All five system conditions will be indicated on one line. The most likely component or components causing the problem are listed in the last column.

Official Licensed Product
Ford Motor Company

REFRIGERANT SYSTEM PRESSURE AND CYCLE TIMING EVALUATION CHART FOR A/C EVAPORATOR CORE ORIFICE CYCLING SYSTEMS

NOTE: Normal system conditional requirements must be maintained to properly evaluate refrigerant system pressures. Refer to charts applicable to system under test.

High (Discharge) Pressure	Low (Suction) Pressure	Clutch Cycle Time			Component — Causes
		Rate	On	Off	
High	High	Continuous Run	Continuous Run	Continuous Run	A/C Condenser Core — Inadequate Airflow.
High	Normal to High	Continuous Run	Continuous Run	Continuous Run	Engine Overheating.
Normal to High	Normal	Continuous Run	Continuous Run	Continuous Run	Air in Refrigerant. Refrigerant Overcharge.[a] Humidity or Ambient Temperature Very High.[b]
Normal	High	Continuous Run	Continuous Run	Continuous Run	A/C Evaporator Core Orifice — Missing. O-Rings Leaking/Missing.
Normal	High	Slow	Long	Long	A/C Clutch Cycling Pressure Switch — High Cut-In.

(Continued)

SERVICE PROCEDURES (Continued)

REFRIGERANT SYSTEM PRESSURE AND CYCLE TIMING EVALUATION CHART FOR A/C EVAPORATOR CORE ORIFICE CYCLING SYSTEMS (Cont'd)

High (Discharge) Pressure	Low (Suction) Pressure	Clutch Cycle Time			Component — Causes
		Rate	On	Off	
Normal	Normal	Slow or No Cycle	Long or Continuous	Normal or No Cycle	Moisture in Refrigerant System. Excessive Refrigerant Oil.
Normal	Normal	Fast	Short	Short	A/C Clutch Cycling Pressure Switch — Cut-In or High Cut-Out.
Normal	Low	Slow	Long	Long	A/C Clutch Cycling Pressure Switch — Low Cut-Out.
Normal to Low	High	Continuous Run	Continuous Run	Continuous Run	Compressor — Low Performance.
Normal to Low	Normal to High	Continuous Run	Continuous Run	Continuous Run	Evaporator to Compressor Suction Line — Partially Restricted or Plugged.[c]
Normal to Low	Normal	Fast	Short	Normal	Evaporator — Low Airflow.
Normal to Low	Normal	Fast	Short to Very Short	Normal to Long	A/C Condenser Core, A/C Evaporator Core Orifice, or Dryer to Evaporator Liquid Line — Partially Restricted or Plugged.
Normal to Low	Normal	Fast	Short to Very Short	Short to Very Short	Low Refrigerant Charge.
Normal to Low	Normal	Fast	Short to Very Short	Long	Evaporator Core — Partially Restricted or Plugged.
Normal to Low	Low	Continuous Run	Continuous Run	Continuous Run	Evaporator to Compressor Suction Line — Partially Restricted or Plugged.[d] A/C Clutch Cycling Switch — Sticking Closed.
Low	Normal	Very Fast	Very Short	Very Short	A/C Clutch Cycling Switch — Cycling Range Too Close.
Erratic Operation or Compressor Not Running	Erratic Operation or Compressor Not Running	—	—	—	A/C Clutch Cycling Switch — Dirty Contacts or Sticking Open. Poor Connection at A/C Clutch Connector or A/C Clutch Cycling Pressure Switch Connector. A/C Electrical Circuit Erratic — See A/C Electrical Circuit Wiring Diagram.
Additional Possible Cause Components Associated with Inadequate A/C Compressor Operation					
A/C Compressor Drive Belt	—	—	—	—	A/C Compressor Drive Belt Loose.
A/C Clutch	—	—	—	—	A/C Clutch Slipping.
A/C Compressor Clutch Field Coil	—	—	—	—	A/C Compressor Clutch Field Coil Open — Shorted, or Loose Mounting.
A/C Control Assembly Switch	—	—	—	—	Control Assembly Switch — Dirty Contacts or Sticking Open.
A/C Clutch Wiring Circuit	—	—	—	—	A/C Clutch Wiring Circuit — High Resistance, Open or Blown Fuse.
Additional Possible Cause Components Associated with a Damaged Compressor					
A/C Cycling Switch	—	—	—	—	A/C Cycling Switch — Sticking Closed or A/C Clutch Seized.
A/C Suction Accumulator Drier	—	—	—	—	A/C Suction Accumulator Drier — Refrigerant Oil Bleed Hole Plugged.

(Continued)

Official Licensed Product Ford Motor Company

SERVICE PROCEDURES (Continued)

REFRIGERANT SYSTEM PRESSURE AND CYCLE TIMING EVALUATION CHART FOR A/C EVAPORATOR CORE ORIFICE CYCLING SYSTEMS (Cont'd)

High (Discharge) Pressure	Low (Suction) Pressure	Clutch Cycle Time			Component — Causes
		Rate	On	Off	
Refrigerant Low	—	—	—	—	Refrigerant Leaks.

a Compressor may make noise on initial run. This is slugging condition caused by excessive liquid refrigerant.
b A/C compressor clutch may not cycle in ambient temperatures above 80°F depending on humidity conditions.
c Low pressure reading will be **normal to high** if pressure is taken at accumulator and if restriction is downstream of service access valve.
d Low pressure reading will be **low** if pressure is taken near the compressor and restriction is upstream of service access valve.

Service Access Gauge Port Valves

WARNING: BEFORE ANY SERVICING OF THE A/C SERVICE GAUGE PORT VALVES CAN BE PERFORMED, THE REFRIGERANT SYSTEM MUST BE DISCHARGED. REFER TO REFRIGERANT RECOVERY IN THE SERVICE PROCEDURES PORTION OF THIS SECTION.

NOTE: The A/C service port valves are of the one-piece design. The top portion of the fitting is aluminum and is threaded into a steel body on the suction accumulator/drier (19C836) or on a refrigerant line and sealed with an O-ring seal. The valve seal is an integral part of the aluminum fitting piece that must be replaced if the seal leaks. Two special service tools have been developed to aid in the servicing of the service access gauge port valves. They are High Side A/C Fitting Socket D94L-19703-A or equivalent and Low Side A/C Fitting Socket D94L-19703-B or equivalent. The Schrader valve core used on R-12 systems is NOT used. The high side fitting is the largest of the two valves. Both valves require special adapters to attach service equipment to the A/C system. In addition to the tools listed previously, the following tools are also required whenever A/C system service is required:

- Rotunda R-134a Manifold Gauge Set 176-R032A or equivalent
- Rotunda R-134a High-Side Quick Disconnect 176-R0037 or equivalent
- Rotunda R-134a Low-Side Quick Disconnect 176-R0036 or equivalent
- Rotunda R-134a Vacuum Pump (1.5 CFM) 176-R0126 or equivalent
- Rotunda R-134a Vacuum Pump (3.0 CFM) 176-R0034 or equivalent
- Rotunda R-134a A/C Service Center 176-00001 or equivalent

Checking for A/C Leaks

NOTE: When checking for refrigerant leaks with an electronic beeper-type tester, the technician should be aware of whatever chemicals are present in the testing area which might affect test results. Some of the chemical compounds which might alter test results are disc brake cleaner, diesel fuel, antifreeze, etc.

Use compressed air to blow off excessive oil from the shaft seal area to reduce the possibility of an erroneous detection of refrigerant retained in the refrigerant oil.

Leak Detector, Electronic

The battery-operated Rotunda R-134a Automatic Calibration Halogen Leak Detector 023-R1003 is an instrument that will locate a smaller refrigerant leak. Follow the directions with the leak detector to obtain absolute accuracy.

When the instrument is set to the ON position, it automatically calibrates itself and is ready for detecting. This R-134a gas detector is equipped with an audio and visual alarm system.

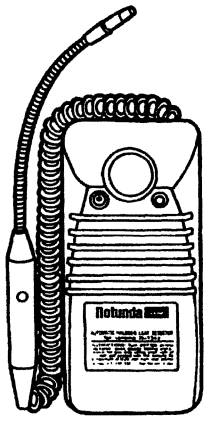

M4577-A

SERVICE PROCEDURES (Continued)

Leak Tracer Dye

Leak tracer dye (part number 112-R0040) can be used to locate leaks within the refrigerant system when necessary. All Ford vehicles contain the tracer dye, added in production. The tracer dye placed within the system during production is usable for one season only. Beyond one season it will be necessary to add additional leak tracer dye to the system using Rotunda Dye Injector 164-R2610 or equivalent when leak checking the A/C system. The use of Rotunda 120 Watt UV Lamp 164-R0721 or equivalent will be necessary to locate traces of the tracer dye at the leak.

CAUTION: When servicing or diagnosing an A/C system, approved safety glasses or goggles should always be worn.

NOTE: There is no need to clean any surfaces of the A/C system before using the tracer dye. All petroleum products have a natural blue fluorescence under ultraviolet light, in contrast to the tracer dye's yellow/green color.

1. Inject 7.39 ml (1/4 ounce) of tracer dye 112-R0040 using Rotunda Dye Injector 164-R2610 or equivalent. Follow instructions included with dye injector for use of the injector tool.
2. Operate the A/C system to thoroughly mix the tracer dye with the system's compressor oil.
3. NOTE: Tracer dye combines and circulates with both the compressor oil and the refrigerant. For tracer dye to show leakage in an A/C system, the compressor oil must flow throughout the system. As the refrigerant escapes, it will leave a trace of the compressor oil with the dye at the point of leakage.

   Continue to operate the A/C system in order to allow the tracer dye to circulate through the system and penetrate the system's leak(s). The time needed for tracer dye to appear will depend on the size of the leak(s).
4. When adequate circulation of the dye has been achieved, turn the vehicle off. Check for leaks using Rotunda UV Lamp 164-R0721 or equivalent. Best leak detection results will be achieved in conditions of low ambient light. Leaks will appear as a yellow/green glow when exposed to the UV lamp.
5. In areas that cannot be reached by the UV lamp, a mechanic's mirror or a nonfluorescent shop towel can be used. If the shop towel method is used, wipe the suspected leak area with the shop towel and inspect the shop towel with the UV lamp. Dye will appear as a yellow/green glow on the shop towel. After the leak is serviced, the traces of dye can be removed using any general purpose oil solvent. If no leak is found, return the vehicle to the customer with instructions to bring it back at a later date to allow time for the fluorescent material to collect at the leak site.
6. Service any leaks indicated.
7. Repeat Steps 2, 3, 4 and 5 to verify that the leak has been serviced. There is no need to add additional dye unless the dye was removed during servicing. Tracer dye 112-R0040 can remain in the system indefinitely without harm to the system. However, the fluorescent life span is approximately 500 hours of A/C system use, after which time another infusion of the dye would be required for leak detection purposes.
8. Install the label included with the tracer dye to the vehicle in an area in the engine compartment where it will be easily seen by a future technician and date the label. Labeling the vehicle will tell others that dye has already been installed.

A/C Evaporator Core/A/C Condenser Core

On-Vehicle Leak Test

Evaporator Core

1. Verify that the manifold gauge set is capable of holding vacuum:
   a. Connect the red and blue hoses together using a 1/4-inch flare coupling.
   b. Connect the gauge set yellow hose to a known good vacuum pump.
   c. Turn the vacuum pump ON and open both gauge set valves.
   d. Operate the vacuum pump for one minute and close both gauge set valves. The low side gauge should indicate approximately 30 inches of vacuum.
   e. Allow the gauge set, with vacuum applied, to set for at least one-half hour.
   f. If the gauge reading drops during that time, the gauge set hose connections, gauges, or valves are leaking and should be serviced before proceeding with the leak test.
2. Discharge the A/C system. Refer to System Evacuating in the Service Procedures portion of this section.
3. Disconnect the liquid line and suction accumulator from the evaporator core tubes. Do not leak test an evaporator core with the suction accumulator attached to the core tubes. Refrigerant outgassing from oil and desiccant in the accumulator will indicate a false leak condition.

Official Licensed Product Ford Motor Company

SERVICE PROCEDURES (Continued)

4. Clean the evaporator core tube fittings.

   For threaded connections wipe any dirt or debris from sealing surfaces with a clean, lint-free rag.

   If the evaporator core tube fittings are the female spring lock design, check the inside of each fitting for scratches, corrosion, or debris from deteriorated O-rings. If scratches, corrosion, or debris are found, the leak test results may not be accurate unless the fitting is properly cleaned as follows:

   a. Remove any surface residue from the inside of the female spring lock coupling by polishing with 400 grit emery cloth (or equivalent). Polish the female surface by using a twisting motion so that any scratches made will not cross the O-ring sealing surface.

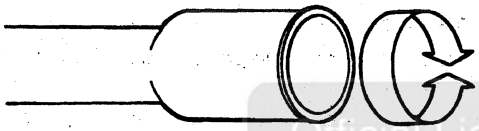

M4540-A

   b. Perform additional polishing of surface using 600 grit emery cloth (or equivalent).

   c. All residue from the polishing operations should be removed from the fitting by wiping with a lint-free rag.

5. For this particular test procedure, it will be necessary to use a manifold gauge set for an R-12 refrigerant system, as the manifold gauge set for the R-134a refrigerant system cannot be attached to the leak test adapters.

   Connect the appropriate test fittings from A/C Test Adapter Set D93L-19703-B to the evaporator tube connections.

6. NOTE: The automatic shutoff valves on some gauge set hoses do not open when connected to the test fittings. If available, use hoses without shutoff valves. If hoses with shutoff valves are used, check to be sure the valve opens when attached to the test fittings or install an adapter that will activate the valve. The test is not valid if the shutoff valve does not open, only the hose will be tested.

   Connect the red and blue hoses from the gauge and manifold set to the test fittings on the evaporator core. Connect the yellow hose to a known quality vacuum pump.

7. Open both gauge set valves and start the vacuum pump. Turn the A/C system blower on low and allow the vacuum pump to operate for a minimum of 45 minutes after the gauge set low-pressure gauge indicates 101 kPa (30 in-Hg). The 45-minute evacuation is necessary to remove any refrigerant from oil left in the evaporator core. If the refrigerant is not completely removed from the oil, outgassing will occur and degrade the vacuum and appear as a refrigerant leak.

8. If the low-pressure gauge reading will not drop to 101 kPa (30 in-Hg) when the valves on the gauge and manifold set are open and the vacuum pump is operating, close the gauge set valves and observe the low-pressure gauge. If the pressure rises rapidly to zero, a large leak is indicated. Recheck the test fitting connections and gauge set connections before replacing the A/C evaporator core (19860).

9. If the low-pressure gauge reading rises 10 or more inches of vacuum from the 30 inch position in 10 minutes, a leak is indicated. If a loss of 3-10 inches of vacuum is observed in 10 minutes, wait 30 minutes to see if the gauge reading stabilizes. If the vacuum reading stabilizes, operate the vacuum pump for an additional 45 minutes with both gauge valves open to remove any remaining refrigerant from the A/C evaporator core and recheck for loss of vacuum as outlined previously in this step.

   If a loss of 1-3 inches of vacuum occurs over 30 minutes, allow the system to sit overnight with system under vacuum and check for stabilization of the vacuum gauge reading. Stabilization of vacuum reading of 27-30 inches of vacuum indicates that the A/C evaporator core does not leak. Always remember that a leaking fitting, manifold gauge set or hose connection will appear as a leaking A/C evaporator core.

10. If the A/C evaporator core does leak, as verified by the above procedure, install a new A/C evaporator core. Refer to 12-03A.

Condenser

1. Verify that the manifold gauge set is capable of holding vacuum:

   a. Connect the red and blue hoses together using a 1/4-inch flare coupling.

   b. Connect the gauge set yellow hose to a known good vacuum pump.

   c. Turn the vacuum pump ON and open both gauge set valves.

   d. Operate the vacuum pump for one minute and close both gauge set valves. The low side gauge should indicate approximately 30 inches of vacuum.

   e. Allow the gauge set, with vacuum applied, to set for at least one-half hour.

   f. If the gauge reading drops during that time, the gauge set hose connections, gauges, or valves are leaking and should be serviced before proceeding with the leak test.

Official Licensed Product Ford Motor Company

SERVICE PROCEDURES (Continued)

2. Discharge the A/C system. Refer to System Evacuating in the Service Procedures portion of this section.
3. Disconnect the high-pressure line and discharge line at the condenser. Plug the lines leading to the A/C compressor (19703) and evaporator.
4. Clean A/C condenser core (19712) fittings.

   For threaded connections wipe any dirt or debris from sealing surfaces with a clean, lint-free rag.

   If the tube fittings are the female spring lock design, check the inside of each fitting for scratches, corrosion, or debris from deteriorated O-rings. If scratches, corrosion, or debris are found, the leak test results may not be accurate unless the fitting is properly cleaned as follows.

   a. Remove any surface residue from the inside of the female spring lock coupling by polishing with 400 grit emery cloth (or equivalent). Polish the female surface by using a twisting motion so that any scratches made will not cross the O-ring sealing surface.

M4540-A

   b. Perform additional polishing of surface using 600 grit emery cloth or equivalent.
   c. All residue from the polishing operations should be removed from the fitting by wiping with a lint-free rag.
5. For this particular test procedure, it will be necessary to use a manifold gauge set for an R-12 refrigerant system, as the manifold gauge set for the R-134a refrigerant system cannot be attached to the leak test adapters.

   Connect the appropriate test fittings from A/C Test Adapter Set D93L-19703-B to the condenser tube connections.
6. NOTE: The automatic shutoff valves on some gauge set hoses do not open when connected to the test fittings. If available, use hoses without shutoff valves. If hoses with shutoff valves are used, check to be sure the valve opens when attached to the test fittings or install an adapter which will activate the valve. The test is not valid if the shutoff valve does not open; only the hose will be tested.

   Connect the red and blue hoses from the gauge and manifold set to the test fittings on the evaporator core. Connect the yellow hose to a known quality vacuum pump.
7. Open both gauge set valves and start the vacuum pump. Turn the A/C system blower on low and allow the vacuum pump to operate for a minimum of one-half hour after the gauge set low-pressure gauge indicates 101 kPa (30 in-Hg). The one-half hour evacuation is necessary to remove any refrigerant from oil left in the A/C condenser core. If the refrigerant is not completely removed from the oil, outgassing will occur and degrade the vacuum and appear as a refrigerant leak.
8. If the low-pressure gauge reading will not drop to 101 kPa (30 in-Hg) when the valves on the gauge and manifold set are open and the vacuum pump is operating, close the gauge set valves and observe the low-pressure gauge. If the pressure rises rapidly to zero, a large leak is indicated. Recheck the test fitting connections and gauge set connections before replacing the A/C condenser core.
9. If the low-pressure gauge reading rises 10 or more inches of vacuum from the 101 kPa (30 in-Hg) position in ten minutes, a leak is indicated. If a very small leak is suspected, wait 30 minutes and observe the vacuum gauge. If a small amount of vacuum is lost, operate the vacuum pump with gauge valves open for an additional 30 minutes. Then, recheck for loss of vacuum as outlined. If a very small leak is suspected, allow the system to set overnight with vacuum applied and check for vacuum loss.

   A leaking fitting, gauge set or hose connection will appear as a leaking A/C condenser core.
10. If the A/C condenser core does leak, as verified by the above procedure, install a new A/C condenser core. Refer to Section 12-03A.

A/C Compressor

A/C Manifold and Tube Leak Test

1. Tighten the retaining bolt to 18-23 N·m (13-17 lb-ft).
2. Add refrigerant to the system if necessary.
3. Leak test the O-ring seals using Rotunda Automatic Calibration Halogen Leak Detector 023-R1003 or equivalent.
4. If no leaks are found, the O-ring seals are good.
5. If a leak is found at the A/C manifold and tube (19D734) and the retaining bolt is tightened to 18-23 N·m (13-17 lb-ft), install new O-ring seals as outlined. Then, repeat the leak test.

External Leak Test

SPECIAL SERVICE TOOL(S) REQUIRED

Description	Tool Number
A/C Pressure Test Plate	T89P-19623-H

SERVICE PROCEDURES (Continued)

1. If the A/C compressor (19703) is on the vehicle, discharge the system using a service center to recover, recycle and recharge. Remove the compressor from the vehicle. Observe all safety precautions.
2. Remove the retaining bolt and remove the A/C manifold and tube from the rear head of the compressor. Install A/C Pressure Test Plate T89P-19623-H on the rear head of the A/C compressor using the existing retaining bolt.
3. Connect the high and low pressure lines of a gauge set to the corresponding fittings on the pressure test plate.
4. Attach the center hose of the gauge set to a refrigerant container standing in an upright position.
5. Using the clutch hub, hand-rotate the compressor shaft ten revolutions to distribute the oil inside the A/C compressor.
6. Open the low-pressure gauge valve, the high-pressure gauge valve and the valve on the refrigerant container to allow the refrigerant vapor to flow into the A/C compressor.
7. Using Rotunda Halogen Leak Detector 023-R1003 or equivalent check for leaks at the compressor shaft seal and the compressor center seal.
8. If a shaft seal leak is found, install a new shaft seal. Refer to Section 12-03B. If an external leak is found at the center joint of the A/C compressor, install a new A/C compressor assembly.
9. When the leak test is completed, recover the remaining refrigerant in system and close the gauge valves (both high and low) as well as the valve on the refrigerant container.
10. Slowly remove the gauge set hoses from the pressure test fitting tool.
11. Install the A/C compressor on the vehicle.
12. Leak test, evacuate and charge the system. Observe all safety precautions.

Connecting Gauge Set to Check for Leaks

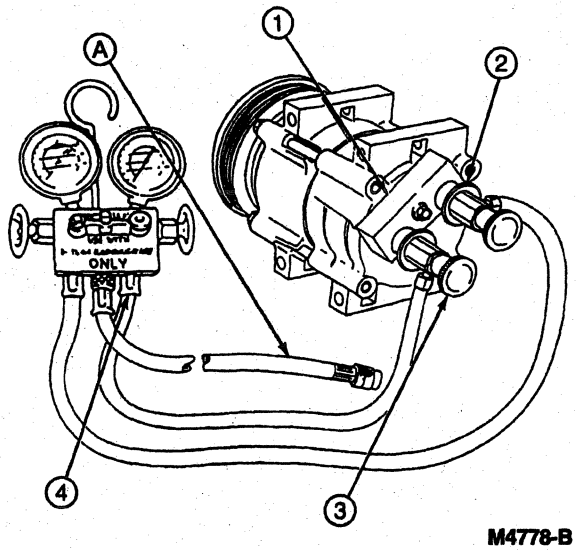

M4778-B

Item	Part Number	Description
1	T94P-19623-E	Pressure Test Plate (R134a)
2	176-R0036	R-134a Low-Side Quick Disconnect
3	176-R0037	R-134a High-Side Quick Disconnect
4	176-R032A	Manifold Gauge Set (R134a)
A	—	To Refrigerant Supply Tank (Part of 176-R032A)

Rotating Torque Check

The rotational torque of a used A/C compressor should be checked if excessive compressor drag is suspected.

1. Discharge refrigerant system. Observe all safety precautions.
2. Remove refrigerant hose and A/C manifold and tube from A/C compressor. Use care not to allow dirt to enter A/C compressor.
3. Remove the compressor from the vehicle. With the A/C clutch (2884) disengaged, rotate the compressor shaft one complete revolution and note the torque required to rotate the shaft another complete revolution.
4. If the rotational torque exceeds specification (13.0 N·m [9.6 lb-ft]), replace the A/C compressor assembly.
5. If the rotational torque is less than specified, excessive drag does not exist in the A/C compressor. Install the A/C manifold and tube and leak test, evacuate and charge the system.
6. Check the system for proper operation.

SERVICE PROCEDURES (Continued)

Refrigerant System

CAUTION: Do not add R-12 refrigerant to an A/C system that requires the use of R-134a refrigerant. Also, do not add R-134a to a system that requires the use of R-12 refrigerant. These two types of refrigerants are not compatible and should never be mixed. Doing so can cause damage to the A/C system.

NOTE: R-12 refrigerant and refrigerant oil is not compatible with R-134a refrigerant and R-134a oil.

In an effort to avoid the use of chlorofluorocarbon (CFC) refrigerants that may harm the ozone layer of the atmosphere, Ford Motor Company has introduced the use of a non-CFC-based refrigerant known as R-134a. This refrigerant has many of the same properties of R-12 and is similar in form and function. However, R-134a refrigerant is a hydrofluorocarbon (HFC)-based refrigerant. Because of the absence of chlorine in its molecular structure, R-134a is not considered an ozone-depleting substance.

Refrigerant Identification and Analysis

Use the A/C refrigerant analyzer 198-00001, or equivalent, to identify the refrigerant type and purity. Refer to the manufacturer's operating instructions.

- If the purity percentage of the R-134a or R-12 is 98% or greater by weight, a green "PASS" LED will light. Proceed with the refrigerant recovery.
- If the R-134a or R-12 does not meet 98% purity, a red "FAIL" LED will light. Proceed with the refrigerant recovery.
- Levels of R-22 and flammable HYDROCARBON'S above 2% will light the red "FAIL" LED. Refer to Recovery of Contaminated A/C Systems in the Service Procedures portion of this section.
- If a flammable HYDROCARBON is detected above 5%, both the "FAIL" and "HYDROCARBON" LED's will light and a horn will sound. Refer to Recovery of Contaminated A/C Systems in the Service Procedures portion of this section.

Recovery of Contaminated A/C Systems

1. Repeat the refrigerant identification.
2. NOTE: The customer may want to return to the facility responsible for the last A/C system service.

   Advise the customer of the contaminated A/C system and any additional costs to service the system.
3. **CAUTION: This equipment MUST only be used to recover contaminated refrigerant to prevent the spread of contaminated refrigerant to other vehicles. As an alternative, contact an A/C service facility in your area that is equipped to handle contaminated A/C systems.**

   Recover the contaminated refrigerant, using suitable recovery only equipment designed for the recovery of contaminated refrigerant.
4. Determine the cause of the failure.
5. Determine which parts will need to be replaced. Refer to the procedure in this section.
6. NOTE: If the vehicle is equipped with an auxiliary A/C and heater system, the evaporator core in the unit must also be flushed to prevent system recontamination.

   Flush the heat exchangers.
7. Install a new suction accumulator/drier.
8. Add the necessary amount of refrigerant oil.
9. Evacuate the A/C system for 45 minutes.
10. Recharge the A/C system.
11. NOTE: Contact your current hazardous waste disposal company to determine if it is capable of disposing contaminated refrigerant.

    Dispose of the contaminated refrigerant in accordance with all federal, state, and local laws and regulation.

Special Service Equipment

CAUTION: Do not use R-12 special tools and equipment when servicing an R-134a refrigerant system. Also, do not use R-134a special tools and equipment when servicing an R-12 refrigerant system. Doing so may damage the refrigerant system. Refer to the Rotunda Equipment Catalog for additional information on R-134a special servicing equipment.

- Spring Lock Coupling Disconnect Tool Set T84L-19623-B.
- High Side A/C Fitting Socket D94L-19703-A.
- Low Side A/C Fitting Socket D94L-19703-B.
- Rotunda R-134a Mobile Recycling Center 023-00150 or equivalent.
- Rotunda R-134a A/C Service Center 176-00001 or equivalent.
- Rotunda R-134a Manifold Gauge Set 176-R032A or equivalent.
- Rotunda R-134a Vacuum Pump (1.5 CFM) 176-R0126 or equivalent.
- Rotunda R-134a Vacuum Pump (3.0 CFM) 176-R0034 or equivalent.
- Rotunda R-134A High-Side Quick Disconnect 176-R0037 or equivalent.
- Rotunda R-134A Low-Side Quick Disconnect 176-R0036 or equivalent.
- Rotunda 0-220°F Dial Thermometer 023-R0007 or equivalent.

Test equipment must be connected to the refrigerant system in order to make system tests. If a charging station is used, follow the manufacturer's guidelines for proper use.

SERVICE PROCEDURES (Continued)

Refrigerant Recovery

Ford Motor Co. supports the efficient usage, recovery, and recycling of R-134a used in car and truck air conditioners. Ford Motor Co. recommends the use of an U.L. approved recovery/recycling device such as Rotunda R-134a Mobile Recycling Center 023-00150 (or other device which meets SAE Standard J1991) during any air conditioning system service and recharge procedure that requires the air conditioning system to be discharged.

Additional information and a typical procedure for operating a refrigerant recovery device follows:

Refrigerant recovery systems and recycling stations are in use in an increasing number of automotive air conditioning service facilities. The use of such equipment makes possible the recovery and use of air conditioning system refrigerant after contaminants and moisture have been removed.

If a refrigerant recovery or recycling station is used, the following general procedures should be observed, in addition to the operating instructions provided by the equipment manufacturer.

CAUTION: Use extreme care and observe all safety and service precautions related to the use of refrigerants.

NOTE: Hoses should have shutoff devices or check valves within 305 mm (12 inches) of the hose end to minimize the introduction of non-condensable gases (air) into the recycling station and to minimize the amount of refrigerant released when the hose(s) is (are) disconnected.

1. Connect the refrigerant recycling station hose(s) to the vehicle air conditioning service ports and the recovery station inlet fitting.
2. Turn the power to the recycling station on to start the recovery process. Allow the recycling station to pump the refrigerant from the system until the station pressure goes into a vacuum. On some stations, the pump will be shut off automatically by a low pressure switch in the electrical system. On other units it may be necessary to manually turn off the pump.
3. Once the recycling station has evacuated the vehicle air conditioning system, close the station inlet valve (if so equipped). Then, switch off the electrical power.
4. Allow the vehicle air conditioning system to remain closed for about two minutes. Observe system vacuum level as shown on the gauge. If the pressure does not rise, disconnect the recycling station hose(s).
5. If the system pressure rises, repeat the above three steps until the vacuum level remains stable for two minutes.
6. Perform required service operations, evacuate and recharge the air conditioning system.

A/C Manifold Gauge Set Connection

When performing any of the various tests, test equipment must be connected to the refrigerant system. If charge station-type equipment is used, follow the instructions of the manufacturer.

Gauge Set Connections

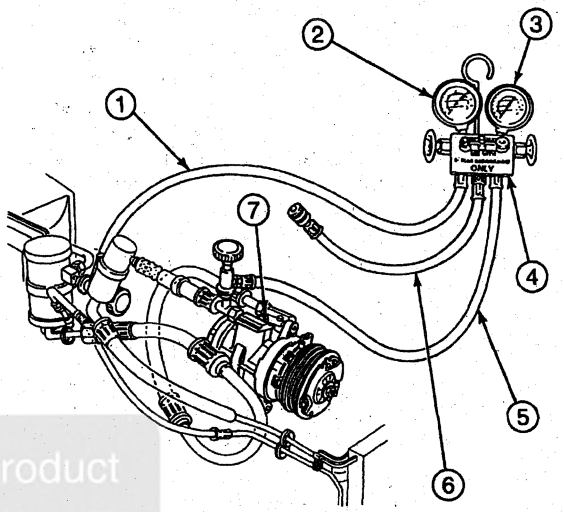

M4067-D

Item	Part Number	Description
1	—	Low-Pressure Service Hose (To Low-Pressure Service Access Gauge Port Valve) (Part of 176-R032A)
2	—	Low-Pressure Gauge (Part of 176-R032A)
3	—	High-Pressure Gauge (Part of 176-R032A)
4	176-R032A	Standard Side Wheel Manifold Set
5	—	High-Pressure Hose (Part of 176-R032A)
6	—	Hose to Vacuum Pump (Part of 176-R032A)
7	—	Pressure Relief Valve (Part of 19E647)

To attach Rotunda Manifold Gauge Set 176-R032A or equivalent to the service access gauge port valves, proceed as follows:

1. Turn both gauge set valves fully clockwise to close high- and low-pressure hoses at gauge.
2. Remove A/C charging valve caps (19D702) from low- and high-pressure service access gauge port valves in high- and low-pressure lines.
3. Connect high- and low-pressure refrigerant hoses with quick disconnects to respective high- and low-pressure service access gauge port valves.

Official Licensed Product

SERVICE PROCEDURES (Continued)

4. Connect hose attached to manifold center fitting to refrigerant supply tank.

System Discharging and Recovery

Discharge the refrigerant from the system into an approved recovery unit before opening the refrigerant circuit to the atmosphere.

1. Remove A/C charging valve caps (19D702) from high- and low-pressure service gauge port valves in high- and low-pressure lines.
2. Connect high- and low-pressure gauge hoses with quick disconnects to respective high- and low-pressure service gauge port valves.
3. Follow the recovery unit manufacturer's instructions.

System Evacuating

NOTE: Ford Motor Company supports the efficient usage, recovery, and recycling of R-134a used in car and truck air conditioners. Ford Motor Company recommends the use of an underwriter's laboratory UL-approved recovery / recycling device such as a Rotunda R-134a service center 176-0001, or equivalent, which meets SAE Standard J1991 during any A/C system service and recharge procedure which requires the A/C system to be discharged.

1. NOTE: Some R-134a service centers require the use of an A/C manifold gauge set. Refer to the procedure in this section.

   Connect the A/C service center hoses to the service gauge access ports.
2. NOTE: The vacuum should be as close to 101 kPa (30 in-Hg) as possible.

   Evacuate the system until the low-pressure gauge is between 84-101 kPa (25-30 in-Hg). Refer to the equipment manufacturer's operating instructions.
3. Operate the vacuum pump for an additional 45 minutes or 65-75 minutes if a part of the A/C system has been replaced.
4. Turn the vacuum pump off.
5. Observe the low-pressure side gauge to make sure that it will hold a vacuum for five minutes.
   - If the A/C system holds a vacuum, then proceed with A/C system charging.
   - If the A/C system leaks, then leak test the system, service any leak(s), and evacuate the system.

System Flushing

Ford Motor Company has approved a procedure to provide technicians with a non-CFC method of flushing contaminated A/C system heat exchangers (A/C evaporator core (19860) and A/C condenser core (19712)). This procedure allows the specified components to be cleaned and flushed while installed in their normal in-vehicle location. The types of contamination flushed include particle matter that results from A/C compressor (19703) or desiccant failure within the suction accumulator / drier (19C836) and gummy residue that may form when refrigerant oil is overheated during A/C compressor seizure.

NOTE: Prior to using the Rotunda A/C Flusher 014-00991 for the first time, review its operating instructions.

The flushing process is a two-step procedure that involves the use of an A/C flusher to:

- Circulate the flushing solvent through the heat exchanger in the reverse direction of normal refrigerant flow (back-flushing). Particulate matter picked up during flushing is filtered from the returning solvent before the solvent is returned to the reservoir for continued circulation.
- Remove the flushing solvent from the heat exchanger. In this step of the procedure, pressurized air 621-862 kPa (90-125 psi) is used to push or evaporate any remaining flush solvent from the heat exchanger.

SERVICE PROCEDURES (Continued)

NOTE: Only the Rotunda A/C Flushing Kit, item number 014-00990, which includes 014-00991 A/C Flusher, 014-00992 A/C Flusher Fitting Kit and Ford part number F4AZ-19579-A A/C System Flushing Solvent, is approved for use on Ford vehicles. No other flushing device or solvent is approved for flushing heat exchangers. Use of any other flusher or solvent may cause damage to the A/C system and the flushing unit.

A/C System Flusher

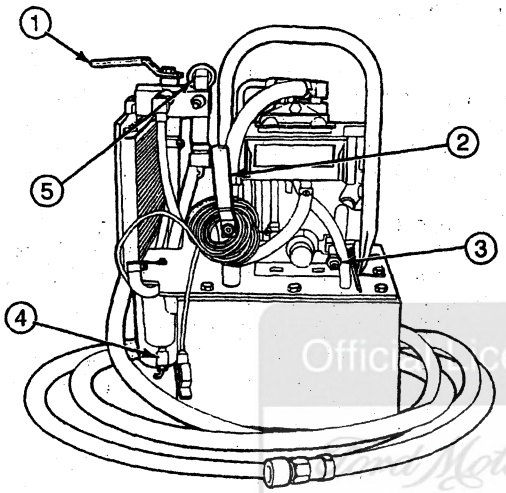

M5403-A

Item	Part Number	Description
1	—	Valve No. 1 (Part of 014-00991)
2	—	Valve No. 2 (Part of 014-00991)
3	—	Flush Quick Coupler (Part of 014-00991)
4	—	Moisture Trap (Part of 014-00991)
5	—	Air Purge Valve (Part of 014-00991)

1. Discharge the A/C system. Refer to System Discharging and Recovery in the Service Procedures portion of this section. Observe all safety precautions.
2. Disconnect refrigerant lines from the heat exchanger(s) to be flushed. Refer to Section 12-03A for information on the A/C condenser core and the A/C evaporator core.
3. Connect Rotunda A/C Flusher 014-00991 and Rotunda A/C Flusher Fitting Kit 014-00992 to the heat exchanger to be flushed. Do not flush through the A/C evaporator core orifice (19D990), mufflers or hoses. Internal plumbing and material make-up of these components make it impossible to properly remove debris or residual flushing solvent.
4. Using four liters (one gallon) of Ford A/C Flushing Solvent part number F4AZ-19579-A, flush the heat exchanger for a minimum of 15 minutes. The flush solvent may be used for one or both heat exchangers in the A/C system. However, the flush solvent is intended for one vehicle only. The filter used on the flushing unit is also intended for use on one vehicle only.
5. Flush component for a minimum of 15 minutes.
6. Apply 621-862 kPa (90-125 psi) pressurized air to the component for a minimum of 30 minutes. The 30-minute purge time is required to force or evaporate all residual flush solvent from the A/C system component. Failure to successfully remove all residual solvent within the component can result in system damage when reconnected and operated. Dispose of used flush solvent and filter in accordance with local, state and federal ordinances.
7. NOTE: A/C system filtering as described in Section 12-03C is optional if system flushing is performed. However, filter kit use is recommended after flushing if A/C system contamination is extensive.

   Replace the suction accumulator/drier and A/C evaporator core orifice on any vehicle being serviced for A/C compressor or desiccant failure.
8. Replace refrigerant hoses if clogged with debris.
9. Reconnect the heat exchanger being serviced.
10. Add additional refrigerant oil as required. Refer to Refrigerant Oil Addition in the Service Procedures portion of this section.
11. Evacuate, leak test and charge A/C system. Refer to System Charging in the Service Procedures portion of this section. Observe all safety precautions.
12. Check system for proper operation.

System Charging Setup

Ford Motor Company recommends using a Rotunda R-134a A/C Service Center 176-00001 or equivalent to perform evacuation and charging of the refrigerant system. Follow the manufacturer's operating guidelines for the unit in use.

SERVICE PROCEDURES (Continued)

If Rotunda R-134a A/C Service Center 176-00001 or equivalent is not available, system charging may be accomplished with Rotunda R-134a Vacuum Pump (1.5 CFM) 176-R0126 or equivalent, charging cylinder, Rotunda R-134a Low-Side Quick Disconnect 176-R0036 or equivalent, Rotunda R-134a High-Side Quick Disconnect 176-R0037 or equivalent and a Rotunda R-134a Manifold Gauge Set 176-R032A. The use of small cans of refrigerant is NOT recommended.

If the charging cylinder method is used, the center port of the manifold gauge set should have two refrigerant hoses with integral shut-off valves built into the manifold gauge set. The Rotunda Manifold Gauge Set 176-R032A is equipped in this manner. If the gauge set is the type that does not have individual shut-off valves and two hoses at the center port, a tee fitting and two hoses should be installed at the center port. In addition, the hoses attached to the center port should have shut-off valves at the other end of the hoses to prevent air from entering the hoses when not connected to the vacuum pump and charging cylinder.

System Charging

Charging with a Charging Cylinder

1. With the Rotunda R-134a Manifold Gauge Set 176-R032A or equivalent valves closed, disconnect the vacuum pump from the manifold gauge set.
2. Connect the center hose of the manifold gauge set to a refrigerant charging cylinder if a Rotunda A/C Service Center 176-00001 or equivalent is not available. If an A/C service center is available, follow manufacturer's instructions for proper use.
3. Loosen the center hose at the manifold gauge set manifold and open the refrigerant cylinder valve. This will allow refrigerant to escape through the loose hose connection, which will result in all air being purged from the hose before entering the A/C system. When a slight hissing sound is heard at the loose connection, retighten the loose hose connection.
4. Open the low-pressure valve on the manifold gauge set and allow refrigerant to enter the A/C system. Keep the refrigerant supply in an upright position to prevent liquid refrigerant from entering the A/C system.
5. When no more refrigerant will enter the A/C system, start the vehicle with the function selector set in the MAX A/C position, the heater blower motor switch (18578) set in the high position and the temperature control set in full cool.
6. Continue to add refrigerant until the specified amount of R-134a has entered the system.
7. Close the valves on the manifold gauge set and the refrigerant supply.
8. Continue to operate the A/C system until operating pressures stabilize.
9. Check the A/C system for proper operation and system pressures.

Spring Lock Coupling

SPECIAL SERVICE TOOL(S) REQUIRED

Description	Tool Number
Spring Lock Coupling Disconnect Tool Set	T84L-19623-B

The spring lock coupling is a refrigerant line coupling held together by a garter spring inside a circular cage. When the coupling is connected, the flared end of the female fitting slips behind the garter spring inside the cage on the male end of the fitting. Once coupled, refrigerant is sealed inside the system through the use of O-rings on the refrigerant lines. These O-rings are made of a special material and are green in color. They are intended for use in R-134a refrigerant systems and must be replaced every time a refrigerant line coupling is disconnected and reconnected for replacement or for any other service reasons. Refer to the Service Parts List at the end of this procedure for more information on the O-rings or replacement garter springs.

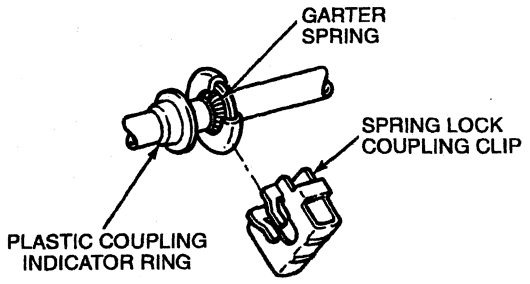

M5194-A

Coupling — Disconnect

1. Discharge the A/C system. Refer to System Discharging and Recovery in the Service Procedures portion of this section. Observe all safety precautions.
2. If applicable, remove the spring lock coupling clip.

SERVICE PROCEDURES (Continued)

3. Fit the appropriate spring lock coupling disconnect tool from the Spring Lock Coupling Disconnect Tool Set T84L-19623-B to the coupling.

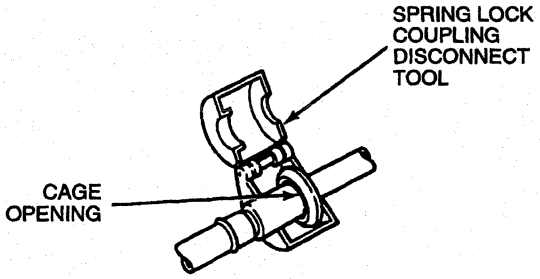

M5195-A

4. NOTE: The garter spring may not release if the spring lock coupling tool is cocked while pushing it into the cage.

   Close tool around refrigerant line and push it into the open side of the cage to expand the garter spring and release the female fitting.

M5196-A

5. After the garter spring is expanded, pull the fitting apart. A slight twisting motion may be required to separate the coupling.

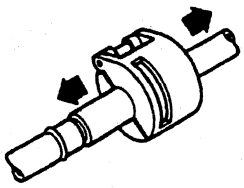

M5197-A

6. Once the coupling is disconnected, remove the tool and cap the line openings to prevent dirt and moisture from entering the system.

Coupling — Connect

1. Check to make sure that the garter spring is properly installed in the cage on the male fitting. If the garter spring is missing, replace it with one of the proper size. Refer to the Service Parts List at the end of this procedure.
2. If the garter spring is damaged, it must be replaced. Remove the damaged garter spring with a small wire hook (do not use a screwdriver) and replace the garter spring with one of the proper size. Refer to the Service Parts List at the end of this procedure.
3. If applicable, remove any shipping caps or plugs from the ends of the refrigerant lines.
4. Lubricate and install new green O-rings on the female fitting using clean refrigerant oil, Motorcraft YN-12B or equivalent meeting Ford specification WSH-M1C231-B. Refer to the Service Parts List at the end of this procedure for more information on the correct O-rings. The use of any O-ring other than the specified green O-ring may allow the connection to leak intermittently during vehicle operation.
5. Lubricate the male fitting, green O-ring seals and the inside of the female fitting with clean refrigerant oil, Motorcraft YN-12B or equivalent meeting Ford specification WSH-M1C231-B.

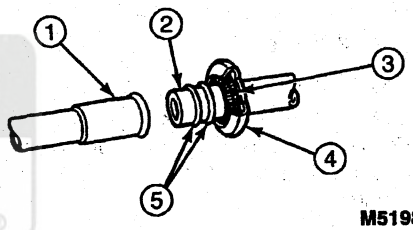

M5198-A

Item	Part Number	Description
1	—	Female Fitting
2	—	Male Fitting
3	—	Garter Spring
4	—	Cage
5	—	Replacement O-Ring Seals

6. Install plastic indicator ring into the cage opening of the male fitting, if the plastic indicator ring is to be used.
7. Fit female fitting to the male fitting and push until the garter spring snaps over the flared end of the female fitting.
8. If the plastic indicator ring is used, it will pop out of the cage opening when the coupling is connected to indicate engagement. The plastic indicator ring will remain free of the spring lock coupling but will be held captive on the refrigerant line. If the plastic indicator ring is not used, ensure coupling engagement by visually checking that garter spring is over the flared end of the female fitting.
9. Install the spring lock coupling clip, if applicable. The use of the spring lock coupling clip offers a secondary retention of the spring lock coupling.
10. Evacuate, leak test and recharge the A/C system. Refer to the Service Procedures portion of this section. Observe all safety precautions.

Official Licensed Product Ford Motor Company

SERVICE PROCEDURES (Continued)

SERVICE PARTS LIST

Part Number	Description
W701993	3/8-Inch O-Ring
W701992	1/2-Inch O-Ring
W701994	5/8-Inch O-Ring
391305-S100	3/4-Inch O-Ring

Refrigerant System Filtering After A/C Compressor Replacement

Refer to Section 12-03A.

A/C Evaporator Core Orifice Replacement Kit Installation

Refer to Section 12-03A.

Suction Accumulator/Drier Replacement Guidelines

Replacement of the suction accumulator/drier (19C836) is necessary anytime a major component of the refrigerant system is replaced. A major component includes A/C condenser core (19712), A/C compressor (19703), A/C evaporator core (19860) or a refrigerant hose/line. An A/C evaporator core orifice (19D990) or O-ring is not considered a major component but the A/C evaporator core orifice should be replaced whenever the A/C compressor is replaced for lack of performance.

In addition to the preceding condition, the suction accumulator/drier should also be replaced if one of the following conditions exist.

1. The suction accumulator/drier is perforated.
2. The refrigerant system has been opened to the atmosphere for a period of time longer than required to make a minor repair.
3. There is evidence of moisture in the system such as internal corrosion of metal refrigerant lines or the refrigerant oil is thick and dark.
4. NOTE: When replacing the suction accumulator/drier, the procedure given here must be followed to make sure that the total oil charge in the system is correct after the new suction accumulator/drier is installed.

   Drain the oil from the removed suction accumulator/drier into a suitable measuring container. It may be necessary to drill one or two 12.7 mm (1/2 inch) holes in the bottom of the old suction accumulator/drier to make sure that all the oil has drained out.

   Add the same amount of clean new refrigerant oil plus 59 ml (two fluid ounces) to the new suction accumulator/drier. Use only the oil specified for the specific vehicle being serviced.

Refrigerant Oil Addition

The FS-10 A/C compressor (19703) uses a unique high-quality refrigerant oil (F2AZ-19577-AC), Motorcraft Part Number YN-12B or an equivalent refrigerant oil meeting Ford specification WSH-M1C231-B. The SD-7H15 A/C compressor uses Sanden SP20 refrigerant oil (F4HZ-19577-A) or equivalent meeting Ford specification WST-M1C231-B2. It is extremely important that only the specified type and quantity of refrigerant oil be used in each A/C compressor. If there is a surplus of oil in the system, it will circulate with the refrigerant, reducing the cooling capacity of the system. Using too little oil or oil not meeting the Ford specification will result in poor lubrication of the A/C compressor.

When replacing a component of the refrigerant system, the procedures in this section must be followed to ensure that the total oil charge in the system is correct after the new part is installed.

When the A/C compressor is operated, oil gradually leaves the A/C compressor and is circulated through the system with the refrigerant. Eventually, a balanced condition is reached in which a certain amount of oil is retained in the A/C compressor and a certain amount is continually circulated. If a component of the system is removed after the system has been operated, some oil will go with it. To maintain the original total oil charge, add oil as required to the new replacement part.

The procedures for replacing oil are as follows:

During A/C Compressor Replacement

NOTE: The suction accumulator/drier (19C836) and orifice tube should also be replaced when the A/C compressor is replaced.

A new service replacement A/C compressor contains no refrigerant oil. Prior to installing the replacement A/C compressor, drain the refrigerant oil from the removed A/C compressor into a calibrated container. The shaft should be rotated about six to eight revolutions while pouring the oil from the ports. This effectively empties the A/C compressor of oil.

1. Obtain a clean container that can also be used as a measuring device.
2. Place the disc and hub assembly on the compressor shaft so the shaft can be rotated.
   - If the amount of oil drained from the old A/C compressor was between 85 and 142 ml (3 and 5 oz), pour the same amount plus one ounce of clean refrigerant oil into the new A/C compressor.
   - If the amount of oil that was removed from the old A/C compressor is greater than 142 ml (5 oz), pour 142 ml (5 oz) of clean refrigerant oil into the new A/C compressor.
   - If the amount of refrigerant oil that was removed from the old A/C compressor is less than 85 ml (3 oz), pour 85 ml (3 oz) of clean refrigerant oil into the new A/C compressor.

SERVICE PROCEDURES (Continued)

R-134a Refrigerant Oil

CAUTION: Do not add R-12 refrigerant oil YN-9 to an R-134a system. Also, do not add R-134a refrigerant YN-12B to an R-12 system. These two refrigerant oils are not compatible and mixing the two could result in A/C system damage.

The refrigerant oil used in an R-134a refrigerant system is a polyalkylene glycol (PAG) oil meeting Ford specification WSH-M1C231-B or equivalent. This type of refrigerant oil, Motorcraft YN-12B, was made especially for R-134a A/C systems and is not suitable for use in R-12 systems. Never use an R-134a refrigerant oil in an R-12 system.

R-12 systems require the use of a mineral-based refrigerant oil with special additives. This refrigerant oil is known as YN-9. This refrigerant oil was developed for use in R-12 systems only and is not suitable for use in R-134a A/C systems.

During Component Replacement

When replacing other components of the air conditioning system, measured quantities of the specified refrigerant oil should be added to the component to ensure that the total oil charge in the system is correct before the system is operated.

Clean refrigerant oil should be poured directly into the replacement components as follows:

- A/C evaporator core (19860) (19860): add 90 ml (3 oz).
- A/C condenser core (19712) (19712): add 30 ml (1 oz).
- Accumulator: drain oil from removed suction accumulator/drier. Add same amount plus 60 ml (2 oz) of clean refrigerant oil to new accumulator.

Other Refrigerant System Components

If any other component such as an A/C evaporator core orifice (19D990) or a hose is replaced, 59 ml (2 oz) additional refrigerant oil is necessary unless a hose bursts with a fully charged system. Then, the addition of refrigerant oil will be necessary with the amount to be determined by the technician. The suction accumulator/drier should also be replaced under these circumstances.

Inspection and Assembly Requirements

NOTE: Any time a hose or component connection leak is observed, to correctly service the leak, the connector fitting must be separated, cleaned and a new O-ring installed. The O-ring and connector surfaces should be lubricated with clean refrigerant oil prior to assembly.

O-ring seal surfaces must be free of dirt, lint, burrs and scratches.

All O-rings must be lubricated with clean refrigerant oil immediately prior to installation.

Mini-Tube Vacuum Hose Service

Mini-tube vacuum hoses are provided in the vacuum hose harness (19C827) assemblies. They provide greater flexibility with less tendency to collapse and are less susceptible to pinching. Service of damaged hoses is easily made using a short piece of standard 3-mm (0.125-inch) inner diameter vacuum hose and inserting the cut ends of the mini-tube into the ends of the standard 3-mm (0.125-inch) inner diameter vacuum hose. The following illustrates an in-line and tee connector installation.

1. Measure length of damaged area of the mini-tube vacuum hose.
2. Cut a piece of standard 3-mm (0.125-inch) inner diameter vacuum hose approximately 25 mm (1 inch) longer than damaged area of the mini-tube vacuum hose.
3. Cut off the mini-tube vacuum hose on each side of damaged area.
4. **WARNING: READ THE WARNING INFORMATION ON THE PRODUCT LABEL.**

   Dip the mini-tube hose ends in commercially available paint thinner containing Methyl Ethyl Ketone (MEK). This solvent will seal the mini-tube in the vacuum hose.
5. Insert ends of the mini-tube vacuum hose approximately 9 mm (0.375 inch) into ends of standard 3-mm (0.125-inch) service vacuum hose section.
6. Shake service joint after assembly to make sure solvent is dispersed and vacuum line is not plugged.
7. Test system for a vacuum leak in service area using Rotunda Vacuum Tester 014-R1054 or equivalent.

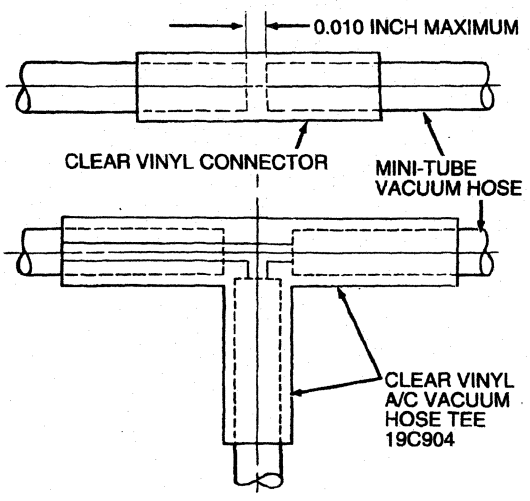

Off-Line Used Product
Ford Motor Company

SPECIFICATIONS

REFRIGERANT SYSTEM SPECIFICATIONS

Description	Specification
Maximum Capacity	1124 ml (38 oz)
Refrigerant R-134a	Motorcraft YN-11 WSH-M17B19-A
Refrigerant Oil, FS-10 Compressor	Motorcraft YN-12B F2AZ-19577-AC WSH-M1C231-B
Refrigerant Oil, SD-7H15 Compressor	Sanden SP20 F4HZ-19577-A WST-M1C23L-B2

TORQUE SPECIFICATIONS

Description	N·m	Lb-Ft	Lb-In
Pressure Cutoff Switch	7-13	—	62-115
Refrigerant Containment Switch	7-13	—	62-115
A/C Manifold and Tube Attaching Bolt	18-23	13-17	—

SPECIAL SERVICE TOOLS/EQUIPMENT

SPECIAL SERVICE TOOLS REQUIRED

Tool Number/ Description	Illustration
T84L-19623-B Spring Lock Coupling Disconnect Tool Set	 T84L-19623-B
T89P-19623-H A/C Pressure Test Adapter	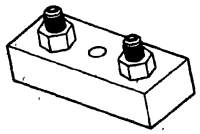 T89P-19623-H

SPECIAL SERVICE TOOLS DESIRED

Tool Number	Description
D93L-19703-B	A/C Test Adapter Set
D94L-19703-A	High Side A/C Fitting Socket
D94L-19703-B	Low Side A/C Fitting Socket

ROTUNDA EQUIPMENT

Model	Description
014-00990	A/C Flushing Kit
014-00991	A/C Flusher (Part of 014-00990)
014-00992	A/C Flusher Fitting Kit (Part of 014-00990)
014-R1069	Radiator/Heater Core Pressure Tester
014-R1054	Vacuum Tester
023-00150	R-134a Mobile Recycling Center
023-R0007	0-220°F Dial Thermometer
023-R1003	R-134a Automatic Calibration Halogen Leak Detector
105-R0051	73 Digital Multimeter
164-R0721	120 Watt UV Light
164-R2610	Dye Injector
176-00001	R-134a A/C Service Center
176-R0034	R-134a Vacuum Pump (3.0 CFM)
176-R0036	R-134a Low-Side Quick Disconnect
176-R0037	R-134a High-Side Quick Disconnect
176-R0126	R-134a Vacuum Pump (1.5 CFM)
176-R032A	R-134a Manifold Gauge Set

Ford Motor Company Official Licensed Publication

SECTION 12-02 Heating and Defrosting

SUBJECT	PAGE
VEHICLE APPLICATION	12-02-1
DESCRIPTION AND OPERATION	
Blower Motor	12-02-2
Blower Motor Thermal Limiter	12-02-2
Climate Control Assembly	12-02-1
Airflow Control	12-02-2
Blower Motor Control	12-02-2
Recirculation/Fresh Air Control	12-02-2
Temperature Control	12-02-2
Heater Blower Motor Switch Resistor	12-02-2
Heater Core	12-02-3
Instrument Panel Registers	12-02-2
Mini-Tube Vacuum Hoses	12-02-5
Safety Precautions	12-02-5
System Airflow	12-02-3
DIAGNOSIS AND TESTING	
Heating and Defrosting	12-02-7
REMOVAL AND INSTALLATION	
Air Damper Door	12-02-16
Air Plenum Chamber and Duct	12-02-13
Blower Motor and Blower Motor Wheel Assembly	12-02-16
Blower Motor Switch	12-02-9
Blower Motor Switch Resistor Assembly	12-02-16
Blower Motor Thermal Limiter	12-02-16
Climate Control Assembly	12-02-7

SUBJECT	PAGE
REMOVAL AND INSTALLATION (Cont'd.)	
Climate Control Assembly Illumination Bulbs	12-02-8
Climate Control Assembly Switch	12-02-9
Climate Control Assembly Switch Knob(s)	12-02-9
Climate Control Cables	12-02-10
Temperature Control Cable	12-02-10
Defroster Ducts	12-02-15
Heater Case	12-02-12
Heater Core	12-02-12
Heater Water Hoses	12-02-18
Instrument Panel	12-02-7
Instrument Panel Registers	12-02-12
Register Louver Assembly	12-02-12
Outlet Floor Duct	12-02-15
Side Window Demister and Hose	12-02-18
Vacuum Control Motors	12-02-16
Air Damper Door	12-02-18
Air Inlet Duct Door	12-02-16
Floor Duct Door	12-02-18
ADJUSTMENTS	
Mini-Tube Vacuum Hose Service	12-02-24
Temperature Control Cable	12-02-24
SPECIFICATIONS	12-02-24
SPECIAL SERVICE TOOLS/EQUIPMENT	12-02-25

Ford Motor Company

VEHICLE APPLICATION

F-250 Heavy Duty, F-350 and F-Super Duty

DESCRIPTION AND OPERATION

Climate Control Assembly

The heater is a blend air type that receives its outside air supply from the cowl inlet. The heater control (18549) is located in the instrument panel (04320) to the right of the steering column. It includes the function control knob, temperature control knob and heater blower motor switch (18578).

The heater blower housing assembly includes:

- blower motor (18527)
- heater blower motor switch resistor (18591)
- A/C damper inlet door (19C802)
- vacuum control motor (18A318) to operate A/C damper inlet door
- electrical harness

The heater blower housing is installed on the engine compartment side of the dash panel. Electrical wire receptacles for the blower motor and heater blower motor switch resistor are provided on the heater plenum chamber case (18A484) and a vacuum connection is provided on each vacuum control motor.

A heater air plenum chamber (18471), on the passenger compartment side of the dash panel attaches to the heater plenum chamber case through the panel with an air passage between the assemblies provided through an opening in the panel.

The heater air plenum chamber includes the following components:

- heater core (18476)
- temperature blend door
- floor/panel door
- floor/defrost door
- vacuum control motors and vacuum hose harness (19C827)

The vacuum control motors and their vacuum lines operate the floor/defrost and floor/panel doors. The temperature blend door is operated mechanically by a A/C temperature cable (19988) attached to the temperature control knob in the heater control.

The function control knob is used to select the functional setting of the heater system. The settings are: VENT, FLOOR, OFF, MIX and DEFROST. Power is supplied to the blower motor when the function knob is in any position except OFF.

DESCRIPTION AND OPERATION (Continued)

Airflow Control

Outside air is supplied to the system through the cowl top grille. This air supply enters the heater plenum chamber case where the blower motor directs some or all air through or around the heater core depending upon the setting of the temperature control knob. Airflow through the heater air plenum chamber is determined by the setting of the function selector knob in the heater control. The outlets through which air can be distributed into the passenger compartment are shown in the following illustration.

Air Distribution

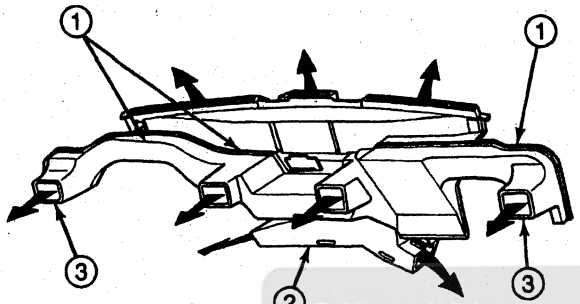

DM0133-A

Item	Part Number	Description
1	19E726	A/C Instrument Panel Duct and Support
2	18C433	Heater Outlet Floor Duct
3	—	Instrument Panel Ducts (2) Driver's Side (Part of 19E726)

Temperature Control

Depending upon its position, the temperature blend door in the heater air plenum chamber directs a given amount of air through the heater core to provide a desired amount of heat. If the amount of air directed by the blend door through the heater core is reduced, less heat will be directed into the passenger compartment.

Conversely, a fully open blend door, in response to a fully WARM setting of the temperature control knob, will provide maximum heat into the passenger compartment.

Blower Motor Control

Three of four operating speeds (LOW, MEDIUM LOW and MEDIUM HIGH) are controlled by a heater blower motor switch resistor connected in series with three of the operating positions and the ground. The MEDIUM LOW and MEDIUM HIGH positions on the heater control are identified by dots on the control.

With the heater blower motor switch in its LOW position, current flow in the ground circuit passes through three of the coils in the heater blower motor switch resistor. In MEDIUM LOW, current flows through two coils. In MEDIUM HIGH, current flows through one coil. In HIGH, current flow in the motor ground circuit bypasses the heater blower motor switch resistor to provide maximum speed.

Recirculation/Fresh Air Control

The vehicle heating system draws outside air into it and distributes this fresh air throughout the passenger compartment in all positions except OFF. If the vehicle is equipped with air conditioning, outside air is distributed throughout the vehicle in all positions except OFF and MAX A/C. In these positions (OFF, MAX A/C) the A/C fresh air inlet door is in the closed position and air within the passenger compartment is recirculated throughout.

Blower Motor

The blower motor (18527) is housed in the A/C blower housing (19930) inside the engine compartment. Blower speed is controlled by the heater blower motor switch (18578) located on the heater control (18549) on the instrument panel (04320) to the right of the steering column. A blower motor wheel (18504) is attached to the blower motor. The blower motor and blower motor wheel control the volume of air delivered to the passenger compartment, which is determined through blower motor speed selection.

Heater Blower Motor Switch Resistor

A heater blower motor switch resistor (18591) with a thermal limiter is mounted in the heater plenum chamber case (18A484). The heater blower motor switch resistor is used with the heater blower motor switch (18578) to obtain the desired fan speed.

Blower Motor Thermal Limiter

The thermal limiter in the heater blower motor switch resistor (18591) serves as a temperature-sensitive fuse. The thermal limiter cannot be replaced; the entire resistor should be replaced whenever the thermal limiter is open. Do not install any resistor that does not contain a thermal limiter.

Instrument Panel Registers

The louvers in the registers can be adjusted to direct air as desired. The louvers can also be closed to block the airflow.

Official Licensed Product Ford Motor Company

DESCRIPTION AND OPERATION (Continued)

Heater Core

The heater core (18476) consists of a number of fins and tubes positioned to extract available heat from the engine coolant and transfer that heat to the air that passes across the heater core.

System Airflow

The following airflow diagrams illustrate the path airflow takes in response to each functional setting of the control knob. The position of the function control knob in the heater control (18549) determines which of the damper doors are open, partially open, or closed.

OFF

In the OFF position, the OUTSIDE AIR door is closed to block the entry of air from the cowl into the heater air plenum chamber (18471).

VENT

NOTE: The temperature door can be set to full cool, full warm or anywhere in between. The function control knob does not affect the temperature blend door; this is governed by the temperature control knob.

In the VENT position, the OUTSIDE AIR door is open and the PANEL/DEFROST door is open. The airflow is directed to the registers in the instrument panel (04320).

FLOOR

NOTE: The temperature door can be set to full cool, full warm or anywhere in between. The function control knob does not affect the temperature blend door; this is governed by the temperature control knob.

In the FLOOR position, the OUTSIDE AIR door is open. Airflow is directed through the TEMPERATURE BLEND door opening, through the heater core (18476), past the closed FLOOR/PANEL door and out through the open FLOOR/DEFROST door to the heater outlet floor duct (18C433). There is also an air bleed past the closed FLOOR/DEFROST door to the windshield defroster openings.

MIX

NOTE: The temperature door can be set to full cool, full warm or anywhere in between. The function control knob does not affect the temperature blend door; this is governed by the temperature control knob.

In the MIX position, the airflow follows the same path as described for FLOOR position, except the FLOOR/DEFROST door is in the mid-position with an equal amount of air flowing to the heater outlet floor duct and the windshield defroster nozzle.

DEFROST

NOTE: The temperature door can be set to full cool, full warm or anywhere in between. The function control knob does not affect the temperature blend door; this is governed by the temperature control knob.

In the DEFROST position, the FLOOR/DEFROST door is fully open to the windshield defroster hose nozzle (18490) with a bleed amount going past the closed door to the heater outlet floor duct.

Ford Licensed Product
Ford Motor Company

DESCRIPTION AND OPERATION (Continued)

Airflow Diagrams

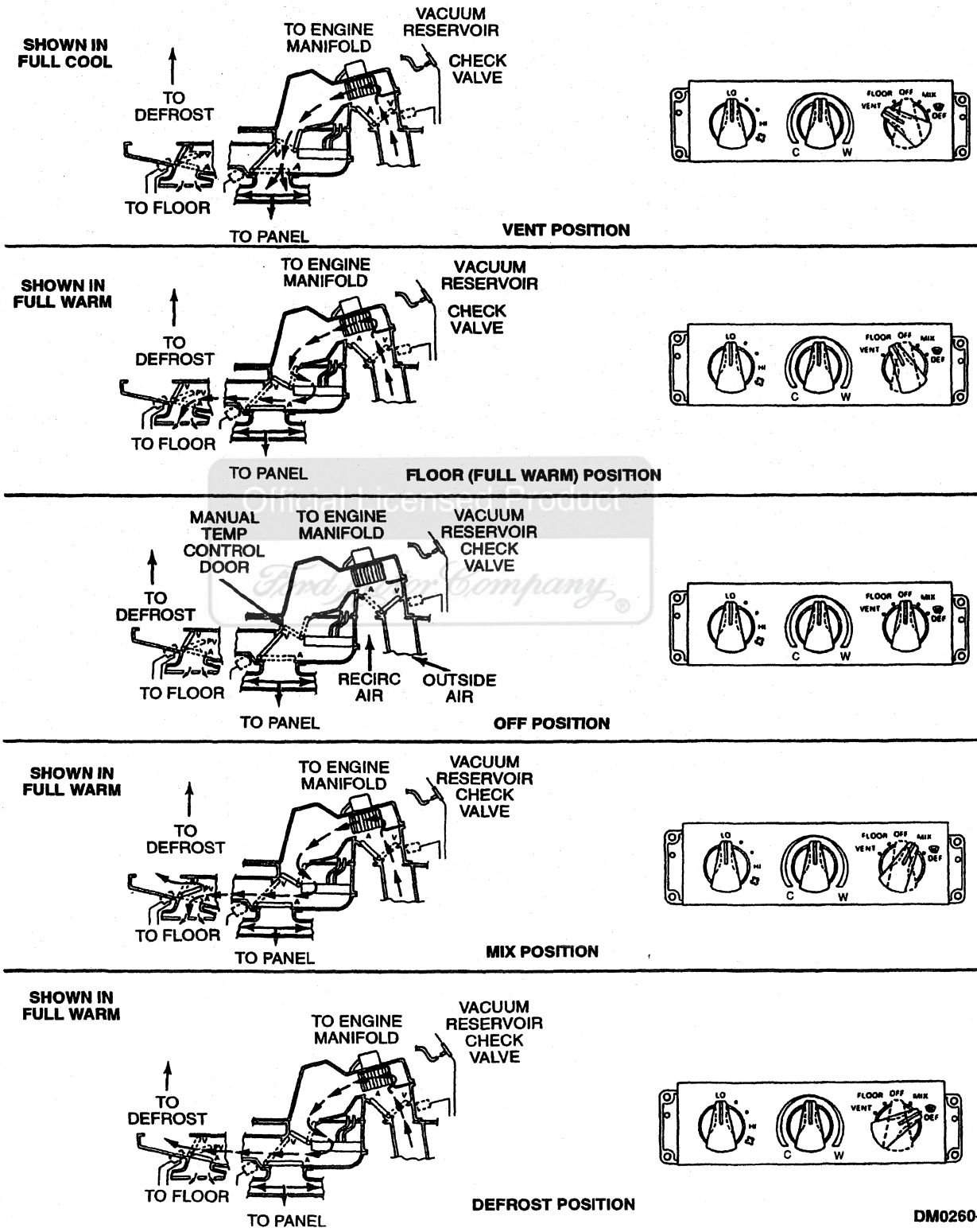

Official Licensed Product Ford Motor Company

DESCRIPTION AND OPERATION (Continued)

Mini-Tube Vacuum Hoses

Mini-tube vacuum hoses are used in the vacuum hose harness (19C827).

- They provide greater flexibility with less tendency to collapse and are less susceptible to pinching.
- Service is easily performed using a short piece of standard 3-mm (1/8-inch) ID vacuum hose and inserting the cut ends of the mini-tube into the ends of the standard 3-mm (1/8-inch) ID vacuum hose.

Refer to Mini-Tube Vacuum Hose in the Adjustments portion of this section.

Safety Precautions

WARNING: CARBON MONOXIDE IS COLORLESS, ODORLESS AND DANGEROUS. IF IT IS NECESSARY TO OPERATE THE ENGINE WITH THE VEHICLE IN A CLOSED AREA SUCH AS A GARAGE, ALWAYS USE AN EXHAUST COLLECTOR TO VENT THE EXHAUST GASES OUTSIDE THE CLOSED AREA.

CAUTION: Whenever components in areas of the engine compartment or instrument panel (04320) are being serviced, the battery ground cable must be disconnected to eliminate the possibility of electrical shorts, burned-up wiring and fires. Extreme care must be exercised when performing electrical tests where the battery must be connected to operate the system.

The following diagram illustrates the vacuum hose connections between the vacuum source, vacuum control motors (18A318), and A/C control (19980). The diagram also identifies the color coding of the vacuum hoses and charts the function control knob settings and vacuum application by heater control (18549) and function.

Official Licensed Product
Ford Motor Company

DESCRIPTION AND OPERATION (Continued)

Function Control Vacuum Circuit

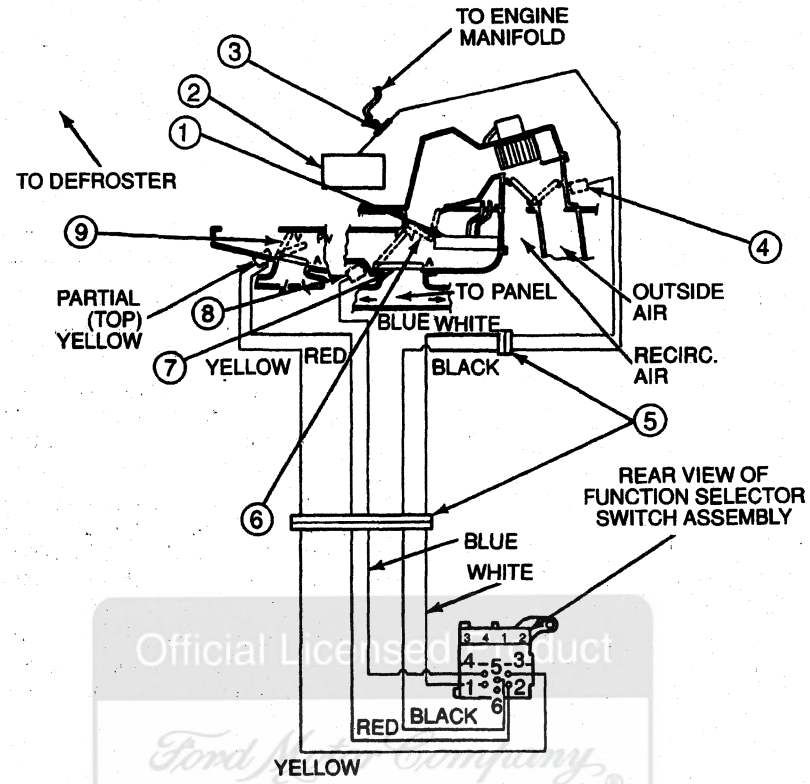

Official Licensed Product
Ford Motor Company

M4193-E

Item	Part Number	Description
1	18476	Heater Core
2	19A566	A/C Vacuum Reservoir Tank and Bracket
3	19A563	A/C Vacuum Check Valve
4	—	Outside-Recirc. Door (White) (Part of Vacuum Harness)
5	—	Vacuum Harness Connector (Part of Vacuum Harness)

(Continued)

Item	Part Number	Description
6	—	Temperature Blend Door (Cable Controlled) (Part of 18471)
7	—	Floor/Panel Door (Part of 18471)
8	—	Panel Vacuum Motor (Part of 18A318)
9	—	Floor/Defrost Door (Red/Yellow) (Part of 18471)

FUNCTION SELECTOR VALVE DETENT POSITIONS

Tube Color	Port No.	Function/Door	Vent	Floor	Off	Mix	Def
White	1	Recirc. — O/S (Outside Air)	A	A	V	A	A
Red	2	Floor — Defrost (Side Port)	V	V	V	A	A
Yellow	3	Floor — Defrost (End Port)	V	V	V	V	A
Blue	4	Panel	V	A	A	A	A
Black	5	Source	V	V	V	V	V

V = Vacuum

A = Atmosphere

DIAGNOSIS AND TESTING

Heating and Defrosting

Refer to Section 12-00.

REMOVAL AND INSTALLATION

Instrument Panel

Refer to Section 01-12.

Climate Control Assembly

SPECIAL SERVICE TOOL(S) REQUIRED

Description	Tool Number
Temperature Control Cable Removal Tool	T94P-18532-A

Removal

1. Disconnect the battery ground cable(s).
2. Remove the trim strip above the heater control (18549) and glove compartment area.
3. Remove the two screws that attach the center finish panel to the instrument panel (04320) to gain access to the four screws that attach the heater control to the instrument panel. Refer to Section 01-12.
4. Remove the four screws. Then, pull the heater control far enough through the opening in the panel to allow disengagement of the electrical connectors for the heater blower motor switch (18578) and control illumination lamps, etc.
5. Disconnect the electrical harness connectors from the heater blower motor switch and illumination connectors on the heater control.
6. Remove the connector from the stowage notch in the heater outlet floor duct (18C433). Disconnect the vacuum hose harness (19C827) from the connector.
7. Pull heater control away from instrument panel far enough to install Temperature Control Cable Removal Tool T94P-18532-A on the A/C temperature cable (19988) connector on the backside of the heater control.
8. Using a small flat-bladed screwdriver, lift the third locking tab as indicated in the following illustration and remove the A/C temperature cable by pulling straight back.

Temperature Cable Removal

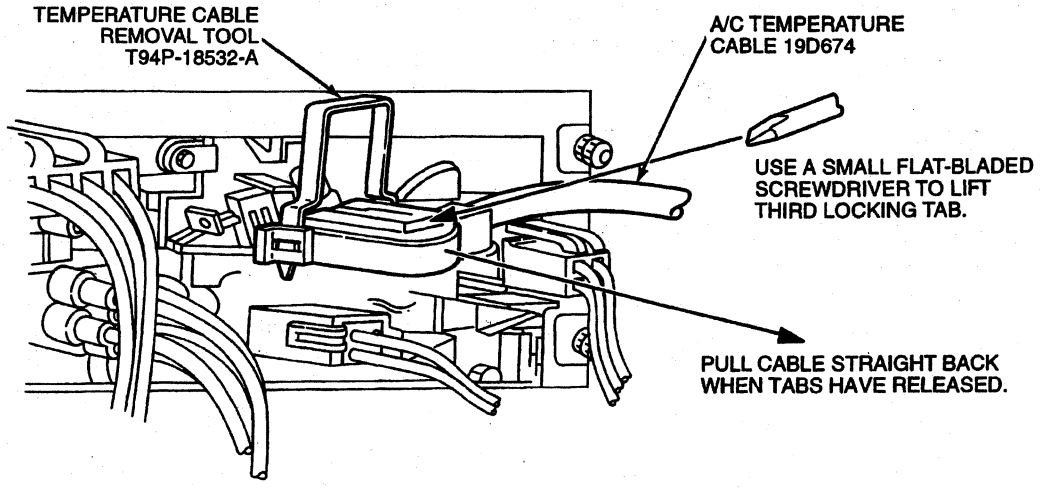

REMOVAL AND INSTALLATION (Continued)

9. Move the heater control from the instrument panel.

Installation

1. Pull the A/C temperature cable through the opening in the instrument panel for a distance of approximately 200 mm (8 inches).
2. Hold the heater control near the instrument panel. Attach the A/C temperature cable to the gear rack.
3. Place the heater control back to the position it occupies for insertion into its opening. Snap the bullet end into the bracket. Make sure the end is firmly seated.
4. Connect the wire harness to the heater blower motor switch and control illumination lamp. Attach the vacuum hose harness to the heater control and to the plenum harness.
5. Attach the connector to the stowage notch in the heater outlet floor duct.
6. Position the heater control into its opening while being careful that the vacuum hose harness and electrical harness are properly stowed, and install four retaining screws.
7. Install center finish trim panel with two retaining screws.
8. Install the trim strip above the heater control and glove compartment area after installing the two retaining screws.
9. NOTE: When the battery (10655) has been disconnected and reconnected, some abnormal drive symptoms may occur while the powertrain control module (PCM)(12A650) relearns its adaptive strategy. The vehicle may need to be driven 16 km (10 miles) or more to relearn the strategy.

   Connect the battery ground cable(s).
10. Check the system for proper operation.

Heater Control, Rear View

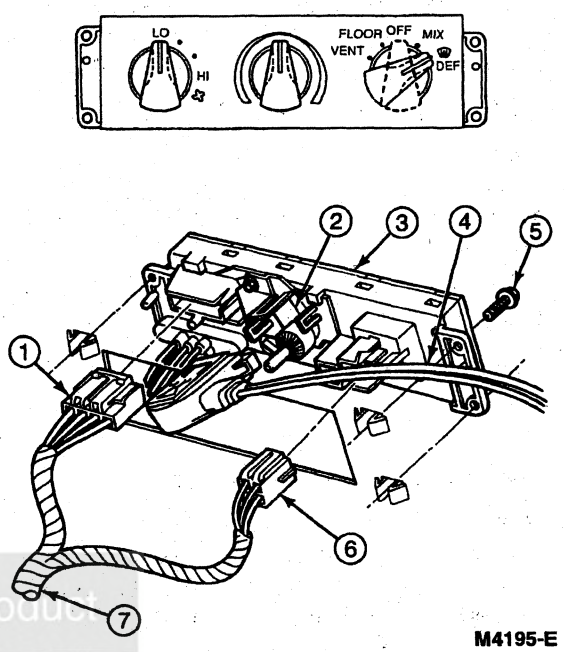

M4195-E

Item	Part Number	Description
1	14401	Main Wiring (to Function Selector Switch)
2	19D816	A/C Temperature Control Bracket
3	18549	Heater Control
4	19988	A/C Temperature Cable
5	N803877-S36B	Screw (4 Req'd)
6	14401	Main Wiring (to Blower Switch)
7	14401	Main Wiring

Climate Control Assembly Illumination Bulbs

Removal

1. Remove trim strip above heater control (18549) and glove compartment area.
2. Remove two screws that attach the center finish trim panel to the instrument panel (04320). Refer to Section 01-12.
3. Remove four screws that attach the heater control to the instrument panel.
4. Pull heater control away from the instrument panel far enough to gain access to the instrument panel lamp socket and bulb (13B765) (two in control).
5. Rotate instrument panel lamp socket and bulb one quarter turn and remove from the heater control.

Ford Motor Company

REMOVAL AND INSTALLATION (Continued)

6. Pull miniature bulb from socket and replace.

Installation

1. Follow removal procedure in reverse order.

Climate Control Assembly Switch Knob(s)

Removal

Grasp knob (18519) in fingers and pull straight back, away from heater control (18549). Repeat for each heater control.

Installation

Align flat, keyed portion of knob with keyed location on heater control shaft and push until knob bottoms against shaft. Repeat for each knob.

Climate Control Assembly Switch

Removal

1. Disconnect the battery ground cable (14301).
2. Remove trim strip above the center finish trim panel and glove compartment area. Refer to Section 01-12.
3. Remove two screws retaining the center finish trim panel to the instrument panel (04320). Remove center finish trim panel.
4. Remove four screws retaining heater control (18549) to the instrument panel.
5. Pull heater control from instrument panel far enough to gain access to the rear of the heater control.
6. Disconnect hardshell electrical connector from the heater blower motor switch (18578).
7. Disconnect hardshell electrical connector from the mode selector switch.
8. Disconnect A/C temperature cable (19988). Refer to Temperature Control Cable in the Removal and Installation portion of this section.
9. Remove one screw attaching the mode selector switch to the heater control.
10. Remove mode selector knob (18519) (pull off) and rotate mode selector switch to remove from heater control.
11. Remove two nuts retaining vacuum fitting to the mode selector switch and remove vacuum fitting from switch.
12. Remove mode selector switch.

Installation

1. Follow removal procedure in reverse order.
2. NOTE: When the battery (10655) has been disconnected and reconnected some abnormal drive symptoms may occur while the powertrain control module (PCM)(12A650) relearns its adaptive strategy. The vehicle may need to be driven 16 km (10 miles) or more to relearn the strategy.

   Reconnect battery ground cable and test system for proper operation

Blower Motor Switch

Removal

1. Remove the instrument panel center finish panel. Refer to Section 01-12.
2. Disconnect the battery ground cable (14301).
3. Remove the heater control (18549) from the instrument panel (04320). Do not detach cable or harnesses.
4. Remove the knob (18519) from the heater blower motor switch (18578) by pulling on the knob.
5. Pull heater control through opening far enough to allow removal of electrical connector.
6. Remove electrical connector from heater blower motor switch by lifting snap-lock retainer with a screwdriver and pulling on the connector.
7. Remove the retaining screw and rotate the heater blower motor switch counterclockwise to release it from the retaining tabs.

Installation

1. Insert the shaft without its knob through the opening in the heater control.
2. Rotate the heater blower motor switch clockwise to engage it with the retaining tabs. Install the retaining screw.
3. Install the knob.
4. Attach the electrical connector to the heater blower motor switch.
5. Position the heater control in its opening. Install its four retaining screws and install bezel.
6. Install the instrument panel finish panel. Refer to Section 01-12.
7. NOTE: When the battery (10655) has been disconnected and reconnected, some abnormal drive symptoms may occur while the powertrain control module (PCM)(12A650) relearns its adaptive strategy. The vehicle may need to be driven 16 km (10 miles) or more to relearn the strategy.

   Connect the battery ground cable.
8. Check the heater blower motor switch for proper operation.

REMOVAL AND INSTALLATION (Continued)

Heater Control Electrical Connections

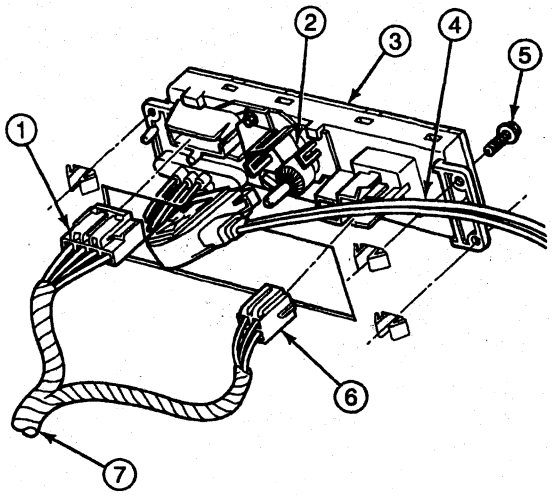

M5305-A

Item	Part Number	Description
1	14401	Main Wiring (to Function Selector Switch)
2	18C613	Temperature Bracket Assy

(Continued)

Item	Part Number	Description
3	18549	Heater Control
4	19988	A/C Temperature Cable
5	N803877-S36B	Screw (4 Req'd)
6	14401	Main Wiring (to Blower Switch)
7	14401	Main Wiring

Climate Control Cables

Temperature Control Cable

Removal

SPECIAL SERVICE TOOL(S) REQUIRED

Description	Tool Number
Temperature Control Cable Removal Tool	T94P-18532-A

1. Release the glove compartment to gain access to the retainer clips on the plenum end of the cables. Depress protruding retainer clip and pull upward to free from plenum.

Official Licensed Product Ford Motor Company

REMOVAL AND INSTALLATION (Continued)

Temperature Control Cable Plenum Attachment

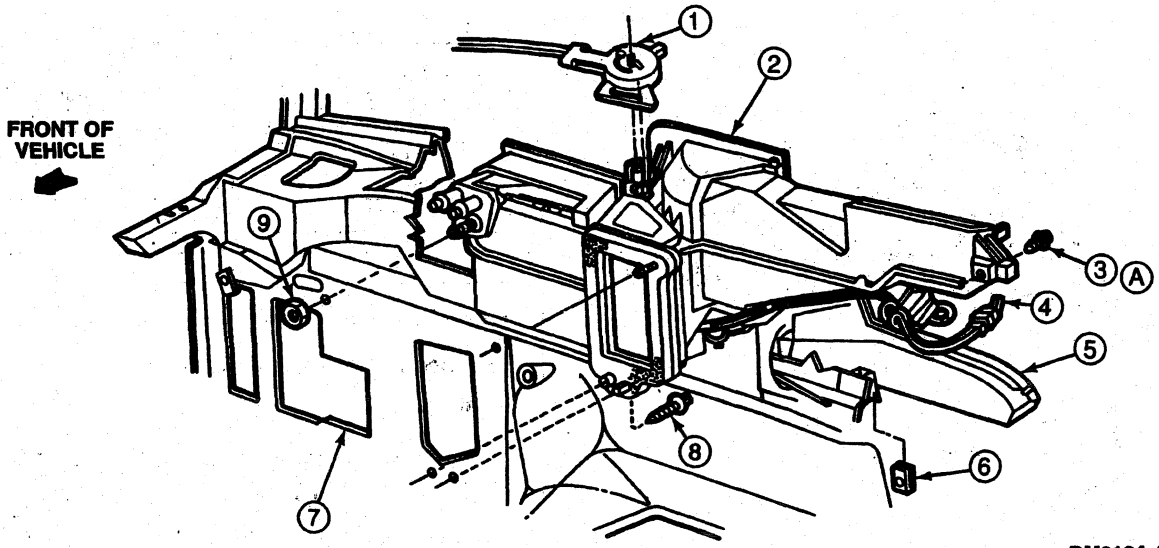

Item	Part Number	Description
1	19988	A/C Temperature Cable
2	18471	Heater Air Plenum Chamber
3	56950-S2	Screw
4	18C581	A/C Plenum Vacuum Harness
5	18C433	Heater Outlet Floor Duct
6	45261-S2	J-Nut
7	01610	Dash Panel
8	56956-S2	Screw
9	N801969-S2	Nut
A	—	Tighten to 2.5-3.0 N·m (22-27 Lb-In)

(Continued)

2. NOTE: Removal of the A/C temperature cable (19988) from the heater control (18549) is easiest if temperature control is removed from the heater control.

   Remove heater control from instrument panel (04320) far enough to gain access to the cable assembly. Refer to Climate Control Assembly in the Removal and Installation portion of this section.
3. Remove the hex-head screw retaining the temperature control switch (with beveled gears) to the heater control.
4. Remove the temperature control knob (18519) and rotate the temperature control switch clockwise until it is free from the retaining tab in the heater control and remove the temperature control switch from the heater control.
5. Release the A/C temperature cable assembly from the temperature control switch by inserting Temperature Control Cable Removal Tool T94P-18532-A. Using a small flat-bladed screwdriver, release the third retaining tab while pulling the cable assembly free.
6. Remove A/C temperature cable. Pay particular attention to cable routing to aid in installation.

Installation

NOTE: All replacement service parts are shipped in the full warm position and must remain in full warm to permit proper alignment during installation. Cables are serviced as a complete assembly only.

1. Route A/C temperature cable in same manner as cable removed.
2. Position temperature control knob in full warm.
3. Install temperature control switch in heater control and position A/C temperature cable so that all three retaining tabs and the beveled gearing is properly aligned. Be sure all components are adjusted to the full warm position.
4. Push A/C temperature cable onto temperature control switch until it is fully seated and all retaining clips are engaged.
5. Install heater control.
6. Working through glove compartment opening, position temperature blend door in the full warm position.

REMOVAL AND INSTALLATION (Continued)

7. Align A/C temperature cable to locating post, align cable assembly hardshell positioning tab with keyed area on the heater air plenum chamber (18471) and the temperature blend door actuator post aligned with the cam on the cable head.
8. Push assembly onto plenum until retaining tab is engaged. Install retaining bracket.
9. Rotate the temperature control knob and check for operation of the temperature blend door.

Instrument Panel Registers

Register Louver Assembly

There are four register and louver assemblies in the instrument panel (04320). Two are located in the upper area of the glove compartment. The other two are located near the right and left edges of the instrument cluster.

The louvers in each of these registers are similar with a single adjusting knob provided to move the vertical vanes from side to side and the horizontal vanes up and down. The primary difference between the two types of register assemblies is length and mounting tabs. The registers near the instrument cluster have four mounting lugs and are shorter front to rear than those in the right hand portion of the instrument panel which have three mounting tabs.

Removal

1. Insert A/C Louver Assembly Remover D92T-19703-A or equivalent into louver opening (over louver assembly) in instrument panel to release retaining tabs for louver assembly.
2. Remove tool and assembly.
3. Repeat for each louver assembly.

Installation

1. Position louver assembly into instrument panel and press into place until an audible click is heard. Repeat for each louver assembly.
2. Check for proper louver operation.

Heater Case

Removal

NOTE: Some applications might have screws in place of nuts.

1. Disconnect battery ground cable (14301).
2. In passenger compartment, remove nut from the bottom of heater air plenum chamber (18471) just to the right of heater core cover (18B300).
3. In engine compartment, remove electrical connector from blower motor (18527) by pushing on connector tab and pulling connector off blower motor. Remove connector from heater blower motor switch resistor (18591).
4. Remove bolt from heater plenum chamber case (18A484) (upper right side of engine compartment).
5. Remove three retaining nuts from the heater plenum chamber case.
6. Pull the heater plenum chamber case away from the dash panel.

Installation

1. NOTE: When the battery (10655) has been disconnected and reconnected, some abnormal drive symptoms may occur while the powertrain control module (PCM)(12A650) relearns its adaptive strategy. The vehicle may need to be driven 16 km (10 miles) or more to relearn the strategy.

   Follow removal procedure in reverse order.

Heater Core

Removal

1. Allow the engine (6007) to cool. Then, observing the safety precautions in Section 03-03 of the Powertrain, Drivetrain Manual, proceed as follows.
2. Place a thick cloth over the radiator cap.
3. Turn the cap slowly to its first stop to release system pressure.
4. When the pressure has been released, tighten the radiator cap.
5. Disconnect the heater water hoses (18472) from the heater core (18476), and plug the heater water hoses.
6. For easier access, remove the glove compartment.
7. From inside the passenger compartment, remove the seven screws that attach the heater core cover (18B300) to the heater air plenum chamber (18471). It will be necessary to move the RABS module out of the way prior to removing the cover.
8. Disconnect the vacuum source. Leave the vacuum hose harness (19C827) attached to the cover. Remove the cover.
9. Remove the heater core from the heater air plenum chamber.

Installation

1. Position the heater core and seal in the plenum heater air plenum chamber.
2. Install the heater core cover on the heater air plenum chamber and secure it with its seven retaining screws. Be certain that the vacuum hose harness is not trapped or pinched during the cover installation. Reinstall RABS module.
3. Connect the vacuum hose harness to its source connection.

Ford Motor Company

REMOVAL AND INSTALLATION (Continued)

4. Install heater water hoses on the heater core at dash panel in engine compartment. Do not overtighten the clamps.
5. Check coolant level and add coolant as required. Refer to Section 03-03 in the Powertrain, Drivetrain Manual.
6. Check system for proper operation and coolant leaks.

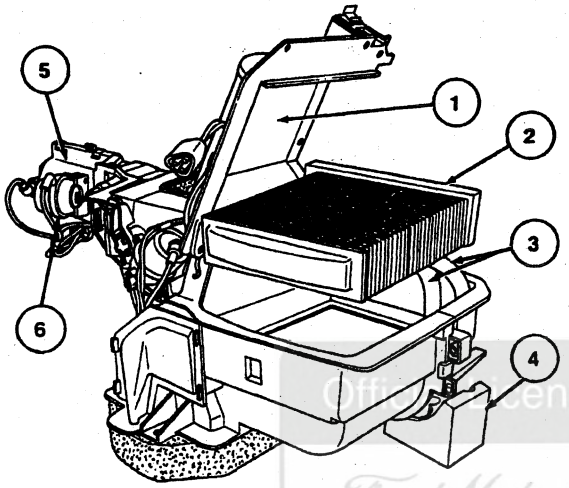

M3151-B

Item	Part Number	Description
1	18B300	Heater Core Cover
2	18476	Heater Core
3	—	Heater Core Tubes (Part of 18476)

(Continued)

Item	Part Number	Description
4	18658	Heater Core Case Seal
5	18471	Heater Air Plenum Chamber
6	18A318	Vacuum Control Motor

Air Plenum Chamber and Duct

SPECIAL SERVICE TOOL(S) REQUIRED

Description	Tool Number
Temperature Control Cable Removal Tool	T94P-18532-A

Removal

1. NOTE: On some vehicles it may be necessary to remove the lower right retaining screw and the screws attaching the two braces to the lower center area of the instrument panel (04320).

   Loosen all of the retaining screws. Refer to Section 01-12. Move the instrument panel rearward to gain access to the heater air plenum chamber (18471). Remove the glove compartment.
2. Remove the heater outlet floor duct (18C433) from the heater air plenum chamber. Refer to Outlet Floor Duct in the Removal and Installation portion of this section.
3. Remove the four fasteners that retain the left end of the heater air plenum chamber to the dash panel.
4. Disconnect the A/C temperature cable (19988) and vacuum connector at the heater control (18549).

Ford Motor Company Licensed Product

REMOVAL AND INSTALLATION (Continued)

Temperature Cable Removal — Heater Control

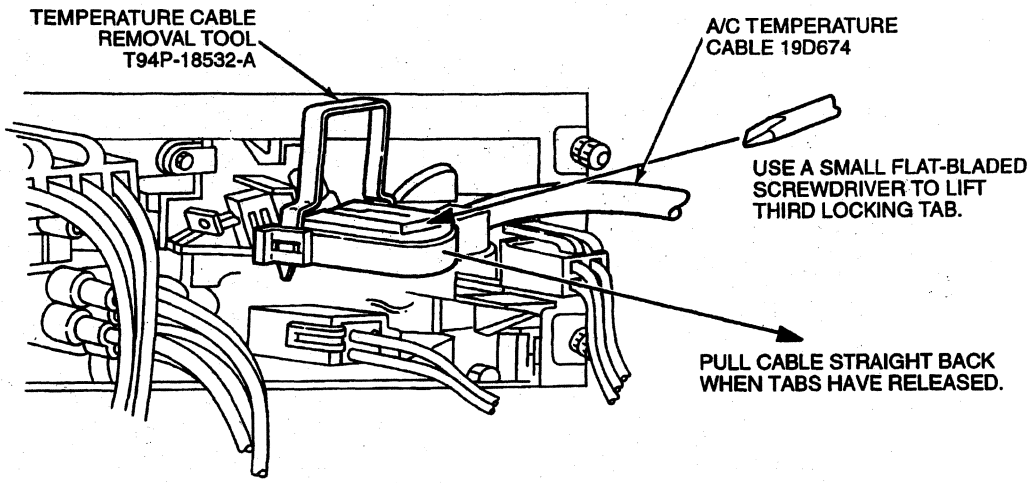

5. Disconnect the source vacuum block that is secured to the right side of the heater core cover (18B300).
6. Pull the heater plenum chamber case (18A484) forward to disengage three studs from the dash panel.
7. NOTE: Care must be taken to avoid spilling any coolant from the heater core (18476).

   Lower the heater air plenum chamber from its location under the instrument panel.

Installation

1. Position the heater air plenum chamber against the dash panel. Install one screw to attach the left end of heater air plenum chamber to dash panel.
2. Position the heater plenum chamber case against the dash panel, making sure that the studs are inserted through holes in the dash panel and flange.
3. Position the instrument panel and tighten its retaining screws.
4. Snap the A/C temperature cable into the cable mounting bracket on the heater air plenum chamber, making sure temperature blend door actuator post is aligned within the A/C temperature cable head cam.
5. Connect the control vacuum and source vacuum.
6. Position the heater outlet floor duct and install its pushpin.
7. Install the glove compartment.
8. Check the system for proper operation.

Official Licensed Product Ford Motor Company

REMOVAL AND INSTALLATION (Continued)

Heater Blower Motor and Heater Plenum Chamber, Installation

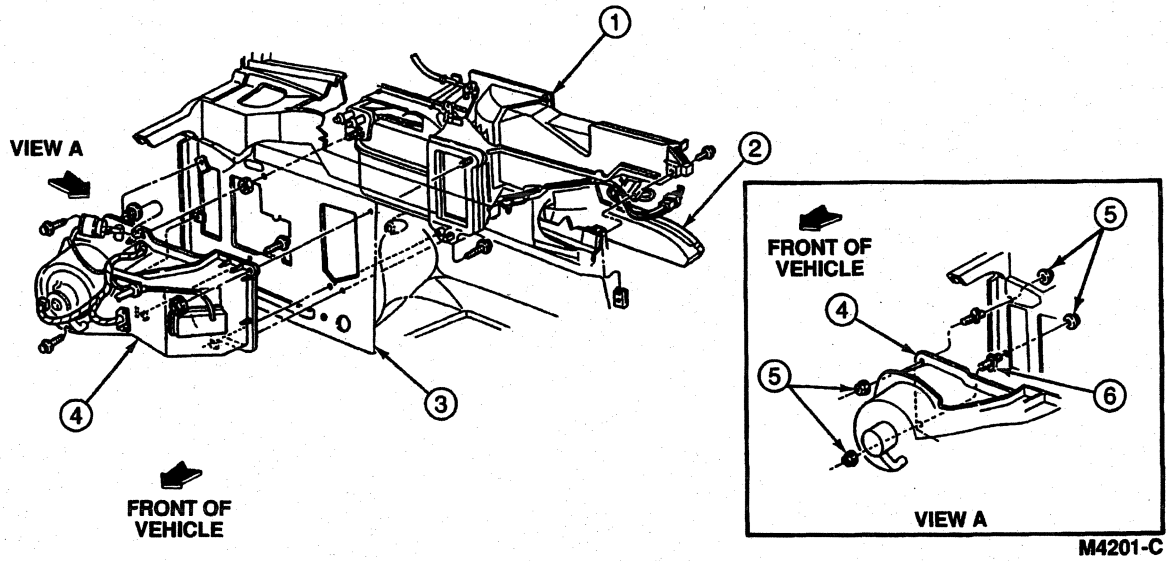

Item	Part Number	Description
1	18471	Heater Air Plenum Chamber
2	18C433	Heater Outlet Floor Duct
3	01610	Dash Panel
4	18A484	Heater Plenum Chamber Case
5	N612906-S2	Nut (4 Req'd)
6	N803912-S2	Stud (2 Req'd)

(Continued)

Official Licensed Product Ford Motor Company

Defroster Ducts

The defroster duct and ventilation ducts are a two-piece, adhesively bonded construction that attaches as an assembly to the instrument panel (04320). Refer to Section 01-12.

Outlet Floor Duct

Removal

1. Remove the vacuum hose harness (19C827) from the stowage slot in the heater outlet floor duct (18C433).
2. Remove the plastic retaining screw from the bottom side of the heater air plenum chamber (18471).
3. Remove the push nut sleeve from the attaching hole.
4. Disengage the heater outlet floor duct from the heater air plenum chamber.

Installation

1. Position heater outlet floor duct on the heater air plenum chamber and engage the lugs inside the heater outlet floor duct with their mating slots in the heater air plenum chamber. Tilt the heater outlet floor duct into place. Then, push it in to secure engagement.
2. Start the plastic screw into the pushnut sleeve. Then, install them both through the heater outlet floor duct flange and into the attaching hole in the heater air plenum chamber. Make sure the attachment is secure.
3. Install vacuum hose harness into stowage slot in heater outlet floor duct.
4. Test system for proper operation.

REMOVAL AND INSTALLATION (Continued)

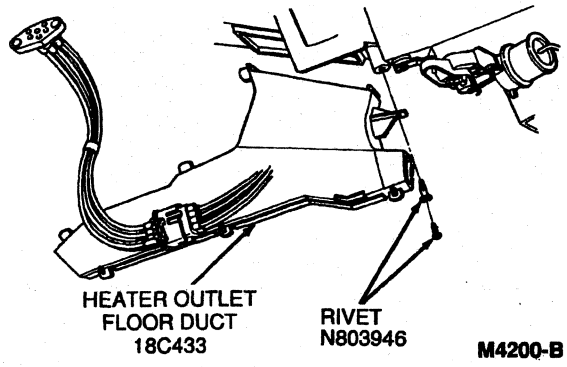

Blower Motor and Blower Motor Wheel Assembly

Removal

1. Disconnect battery ground cable(s).
2. On California vehicles, remove emission module forward of blower motor (18527).
3. Disconnect wire harness connector from blower motor by pushing down on connector tabs and pulling connector off blower motor.
4. Disconnect blower motor housing tube (19A786) at blower motor.
5. Remove four screws attaching blower motor to heater plenum chamber case (18A484).
6. Holding blower motor housing tube, pull blower motor from heater plenum chamber case and remove it from vehicle.
7. If the blower motor wheel (18504) is to be installed on the new blower motor, remove the retainer and then gently pull the blower motor wheel from the shaft.

Installation

1. NOTE: When the battery (10655) has been disconnected and reconnected, some abnormal drive symptoms may occur while the powertrain control module (PCM)(12A650) relearns its adaptive strategy. The vehicle may need to be driven 16 km (10 miles) or more to relearn the strategy.

   Follow removal procedure in reverse order.

Blower Motor Switch Resistor Assembly

Removal

1. Pry the wire connector from the heater blower motor switch resistor (18591).
2. Remove the two screws that attach the heater blower motor switch resistor to the heater plenum chamber case (18A484).

Installation

1. Follow removal procedure in reverse order.
2. Check operation in all blower speeds.

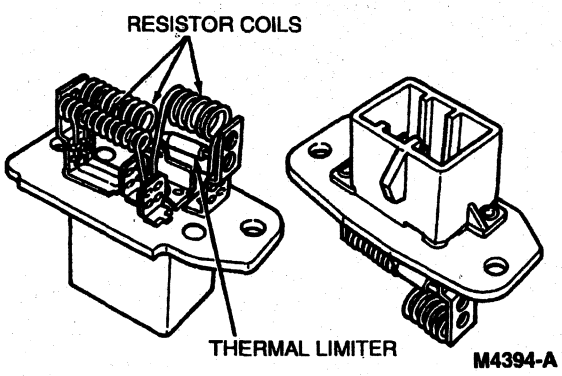

Blower Motor Thermal Limiter

The blower motor thermal limiter is part of the heater blower motor switch resistor (18591) and cannot be serviced separately.

Air Damper Door

The damper doors inside the heater air plenum chamber (18471) cannot be replaced. As a result, if there is a problem in the MIX or the PANEL/DEFROST door, the heater air plenum chamber, including these doors, must be replaced. The heater air plenum chamber must also be replaced if there is damage to the mounting studs that cannot be repaired.

Vacuum Control Motors

Air Inlet Duct Door

Removal

1. Disconnect the connector and remove the blower motor (18527).
2. If only the vacuum control motor (18A318) is to be removed, disconnect the two screws that attach the motor to the upper surface of the outside door duct.

Ford Motor Company Confidential Product

REMOVAL AND INSTALLATION (Continued)

3. Pry the vacuum control motor and arm assembly upward at the arm end to free it from its mounting peg. A retaining flange that is an integral part of the crank, peg, and flange component may partially obstruct the arm in its upward movement along the peg. If this retaining flange should break off when forcing the arm upward, a 3/16-inch spring nut (Part No. 383358-S) must be used to retain the arm when the same or replacement vacuum control motor is installed. The following illustration shows removal in View A and the area in which retainer flange breakage might occur in the main view.

Outside Air/Recirculation Air Door Vacuum Control Motor Installation

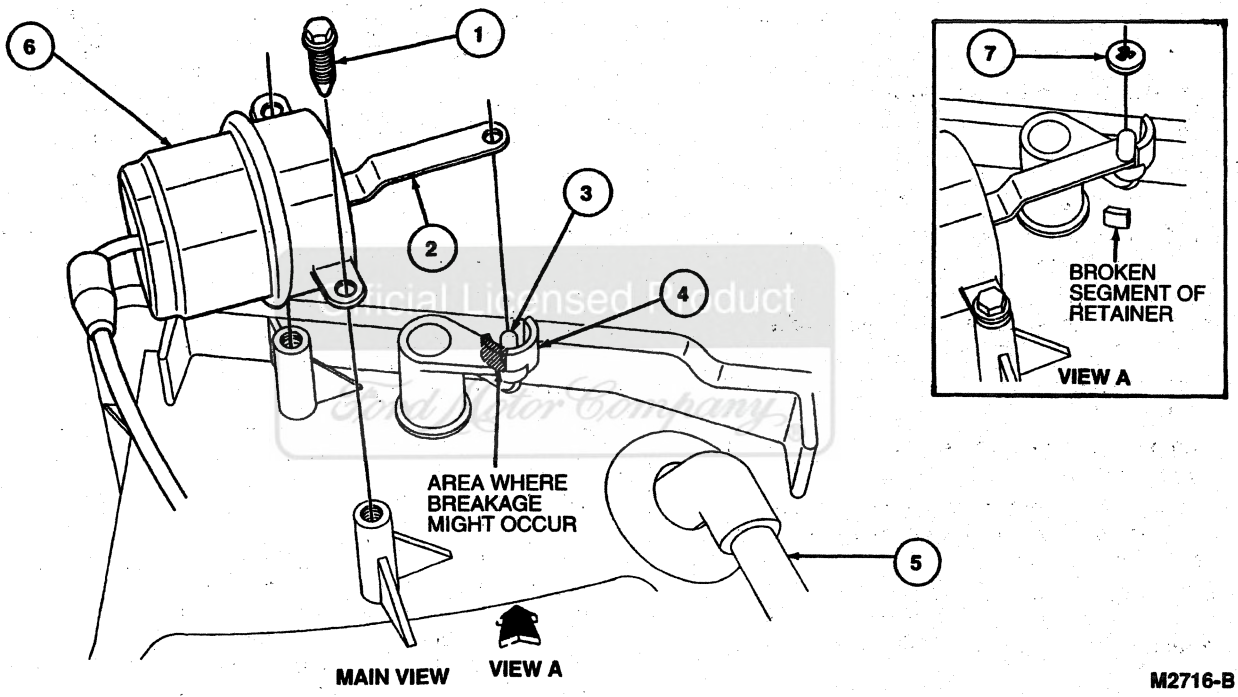

Item	Part Number	Description
1	39085-S2	Screw (2 Req'd)
2	—	Motor Arm (Part of 18A318)
3	—	Peg (Part of Cam)
4	—	Retainer (Part of Cam)

Item	Part Number	Description
5	—	Electrical Wiring Harness (Part of 14401)
6	18A318	Vacuum Control Motor
7	383358-S	Spring Nut

(Continued)

4. Look through opening in the heater assembly and use a screwdriver to depress the snap-on door crank, while pulling up on the door shaft to release the crank from the door.
5. Remove the door through the opening.

Installation

1. Insert the door through the opening. Seat the bottom door pivot first, then swing top door pivot into place.
2. Hold door in full outside air position (swing to full-in board position) and snap in crank.
3. Align the hole in the arm with the peg in the door crank.

REMOVAL AND INSTALLATION (Continued)

4. NOTE: If the flange has been broken off, install the spring nut as shown in the Outside Air / Recirculation Air Door Vacuum Control Motor Installation illustration.

   Slide the arm downward over the peg and along the inner surface of the retaining flange where the arm seats below the base of the flange surface.
5. Install the blower motor in housing and connect electrical harness.

Air Damper Door

Removal

1. Remove the vacuum hose from the vacuum control motors.
2. Remove the two screws that attach the vacuum control motor to the heater air plenum chamber (18471).
3. Rotate the assembly so that the motor arm slides off of the crank pin. Pull the vacuum control motor and bracket assembly off the crank arm.

Installation

1. Follow removal procedure in reverse order, engaging tee-shaped end of door crank arm into slot in vacuum control motor and bracket assembly.
2. Rotate assembly into proper position.

Floor Duct Door

Removal

1. Remove the heater outlet floor duct (18C433). Refer to Outlet Floor Duct in the Removal and Installation portion of this section.
2. Disconnect the two vacuum hoses from the vacuum control motor.
3. Remove the two screws which secure the vacuum control motor and bracket assembly to the heater air plenum chamber.
4. Using a small screwdriver, depress the tang on the side of the door operating lever and pull the arm out of the lever.

Installation

1. Follow removal procedure in reverse order.
2. Make sure locking tangs are securely engaged when motor arm is slid into door lever.

Side Window Demister and Hose

Removal

1. Remove the instrument panel (04320). Refer to Section 01-12.
2. Remove two nuts attaching the A / C side window demister and hose (19E630) and one nut and one spring nut attaching the A / C side window demister and hose nozzles to the instrument panel. These nozzles are located in opposite corners of the instrument panel.
3. Disconnect the flexible hoses that slide over the input end of each nozzle.
4. Remove three push screws that attach the A / C demister hose connector (19E680) to the structural duct assembly. Disconnect the flexible hoses that slide over the input end of each nozzle.

Installation

1. To install nozzles, hoses, and connector, install two retaining nuts to the A / C side window demister and hose, and one nut to the A / C side window demister and hose. Attach three push screws through the A / C demister hose connector into the structural duct.
2. Slide the demister hoses over their attaching locations.
3. Install instrument panel. Refer to Section 01-12.

Demister Nozzle and Hose Assembly Installation

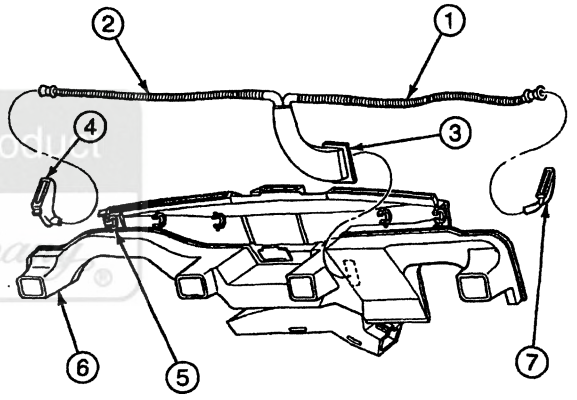

M4199-C

Item	Part Number	Description
1	19E658	Right Demister Hose
2	19E659	Left Demister Hose
3	19E680	Demister Hose Connector
4	19E657	Left Demister Nozzle
5	19B632	Demister Hose Support Clip (Part of 19E727)
6	—	Defroster Outlets, Instrument Panel Ducts, and Floor Ducts (Part of 19E727)
7	19E629	Right Demister Nozzle

Heater Water Hoses

Removal

The following procedure and illustrations apply to the heater water hose (18472) installations on the 5.8L (351 CID), 7.3L (445 CID) and 7.5L (460 CID) engines.

1. Drain the coolant from the cooling system.

Official Licensed Product Ford Motor Company

REMOVAL AND INSTALLATION (Continued)

2. Loosen the clamps and remove the heater water hoses from the vehicle.
3. Cut a length of heater water hose from bulk stock which is the same length and diameter as that of the heater water hose that has been removed. Bulk hose will require some modification on vehicles with E4OD automatic transmissions because the T in the hose has a factory crimp for retention to the tee.

Installation

1. Route the heater water hoses as shown in the applicable illustration.
2. Install the heater water hoses on their fittings and tighten the retaining clamps to 2-3 N·m (18-27 lb-in).
3. Fill and bleed the cooling system. Refer to Section 03-03 of the Powertrain, Drivetrain Manual.
4. Check for coolant leaks and proper operation of the system.

Official Licensed Product
Ford Motor Company

REMOVAL AND INSTALLATION (Continued)

Heater Hose Installation, 5.8L (351 CID) MFI Engine (Heater Hose Routing Same Without A/C)

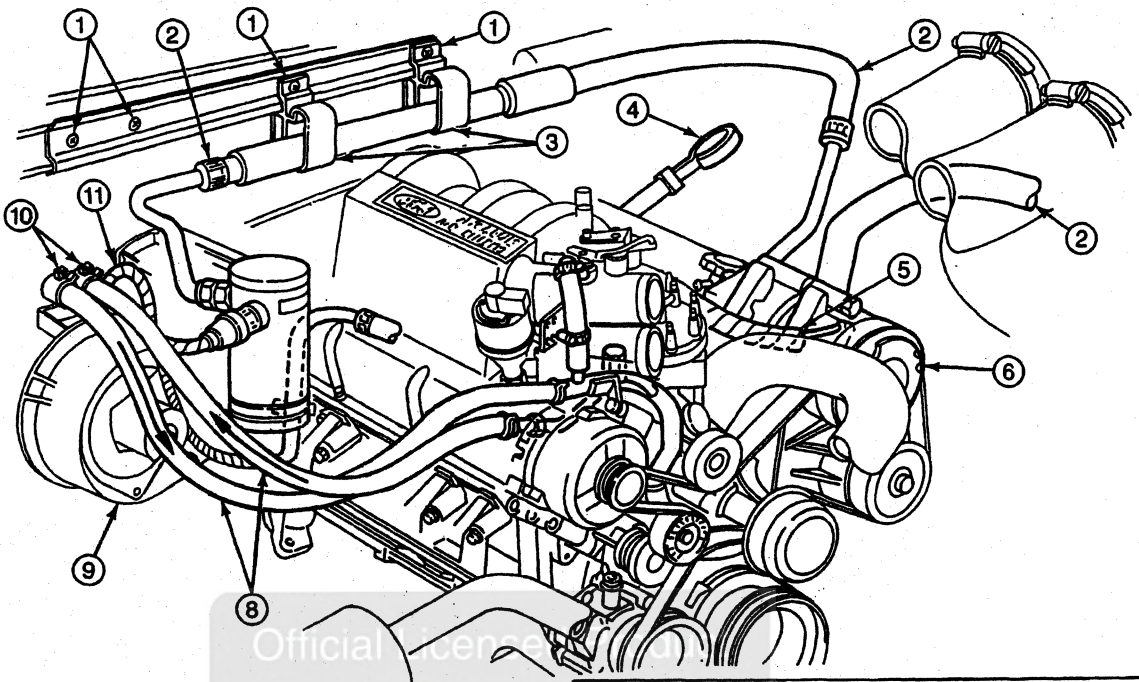

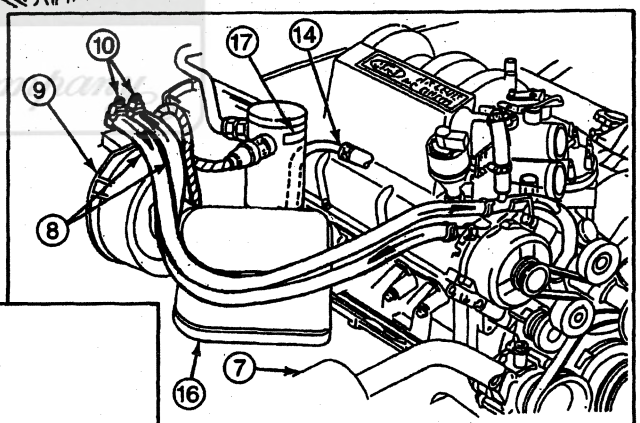

HEATER HOSE INSTALLATION FOR VEHICLES WITH MANUAL TRANSMISSION

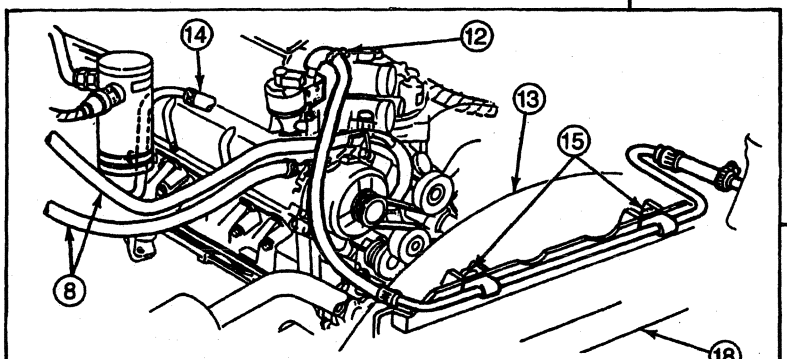

HEATER HOSE ASSEMBLY INSTALLATION FOR VEHICLES WITH E4OD TRANSMISSION

DM0301-A

Item	Part Number	Description
1	—	Existing Screw (Part of Cowl Top Outer Panel)
2	19D734	A/C Manifold and Tube
3	19N704	A/C Compressor Hose Clip

(Continued)

Item	Part Number	Description
4	—	Dipstick (Part of 6007)
5	9D930	Fuel Charging Wiring
6	19703	A/C Compressor

(Continued)

REMOVAL AND INSTALLATION (Continued)

Item	Part Number	Description
7	19618	A/C Evaporator Temperature Control Thermostat
8	18472	Heater Water Hose
9	19850	A/C Evaporator Housing
10	19B679	A/C Hose Clamp (2 Req'd)
11	—	Wiring (Part of 14401)
12	376240-S100	Hose Clamp (2 Req'd)

(Continued)

Item	Part Number	Description
13	8146	Fan Shroud
14	19835	Condenser to Evaporator Tube
15	—	U-Nuts (Part of 8146)
16	9E799	Speed Control Vacuum Reservoir
17	—	Tag — A/C Service Instructions (Part of 19C808)
18	8005	Radiator

Heater Hose Installation, 7.3L (445 CID) Diesel Engine (Heater Hose Routing Same Without A/C)

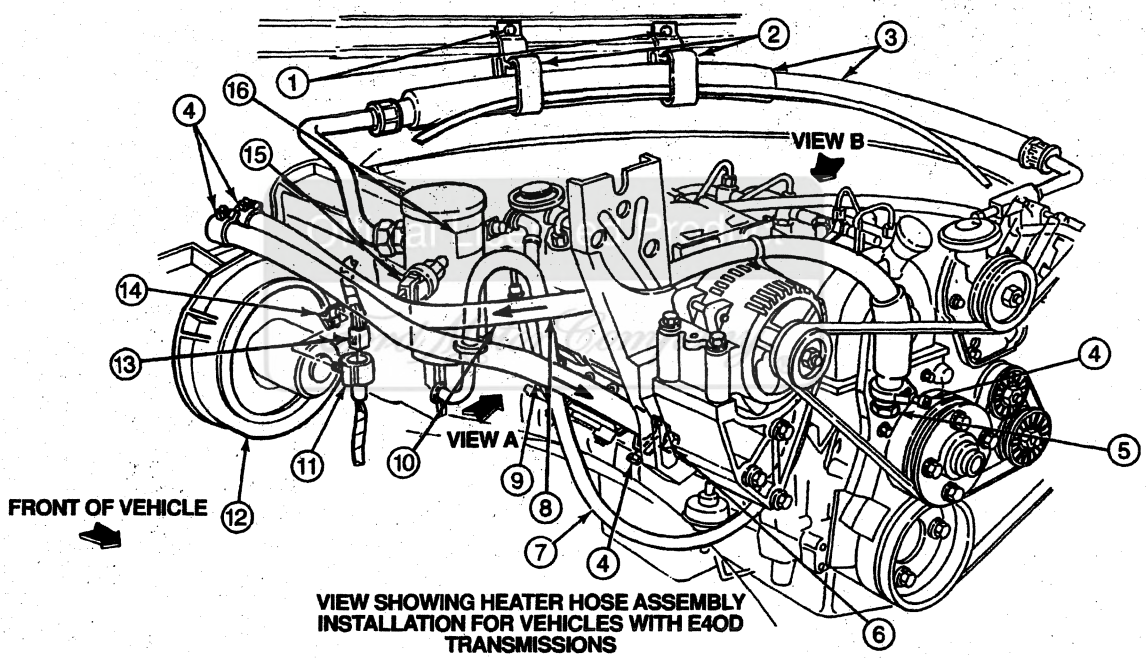

VIEW SHOWING HEATER HOSE ASSEMBLY INSTALLATION FOR VEHICLES WITH E4OD TRANSMISSIONS

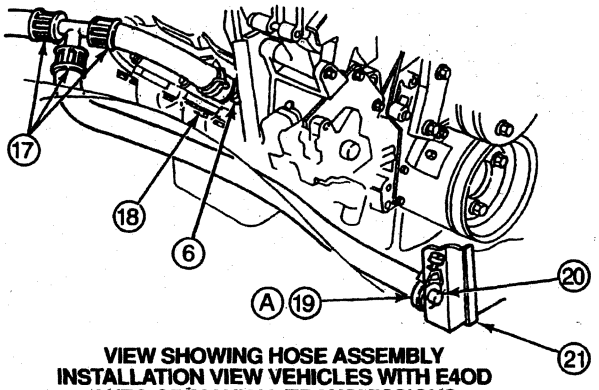

VIEW SHOWING HOSE ASSEMBLY INSTALLATION VIEW VEHICLES WITH E4OD AUTO OR MANUAL TRANSMISSIONS VIEW A

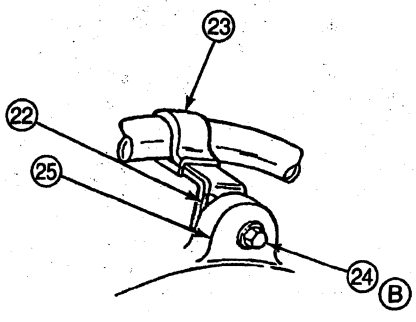

INSTALLATION OF BRACKET ASSEMBLY FOR ALL VEHICLES EQUIPPED WITH AMBULANCE PACKAGE VIEW B

M4375-E

REMOVAL AND INSTALLATION (Continued)

Item	Part Number	Description
1	—	Existing Screw (Part of Cowl Panel)
2	19N704	A/C Compressor Hose Clip
3	19D734	A/C Manifold and Tube
4	19B679	A/C Hose Clamp
5	389766-8287	Heater Hose Connection
6	18599	Hot Water Heater Elbow Connection
7	19835	Condenser to Evaporator Tube
8	18472	Heater Water Hose (Inlet) (Auto Trans.)
9	18472	Heater Water Hose (Outlet)
10	18472	Heater Water Hose (Inlet)
11	—	Locator (Part of 14401)
12	19850	A/C Evaporator Housing
13	—	Wiring (Part of 14401)

(Continued)

Item	Part Number	Description
14	—	Existing Retainer (Part of 19850)
15	19E561	A/C Cycling Switch
16	—	A/C Service Instructions Tag (Part of 19C808)
17	—	Junction (Part of 18C266)
18	—	Plate (Part of 6007)
19	389772-S100	Clamp
20	—	Connector (Part of 8005)
21	8005	Radiator
22	N62332	U-Nut
23	180331	Bracket Assy
24	N606677-S2	Screw
25	—	Ear (Part of 10346)
A	—	Tighten to 2-3 N·m (18-27 Lb-In)
B	—	Tighten to 7-11 N·m (62-97 Lb-In)

Official Licensed Product
Ford Motor Company

REMOVAL AND INSTALLATION (Continued)

Heater Hose Installation, 7.5L (460 CID) Engine (Heater Hose Routing Same Without A/C)

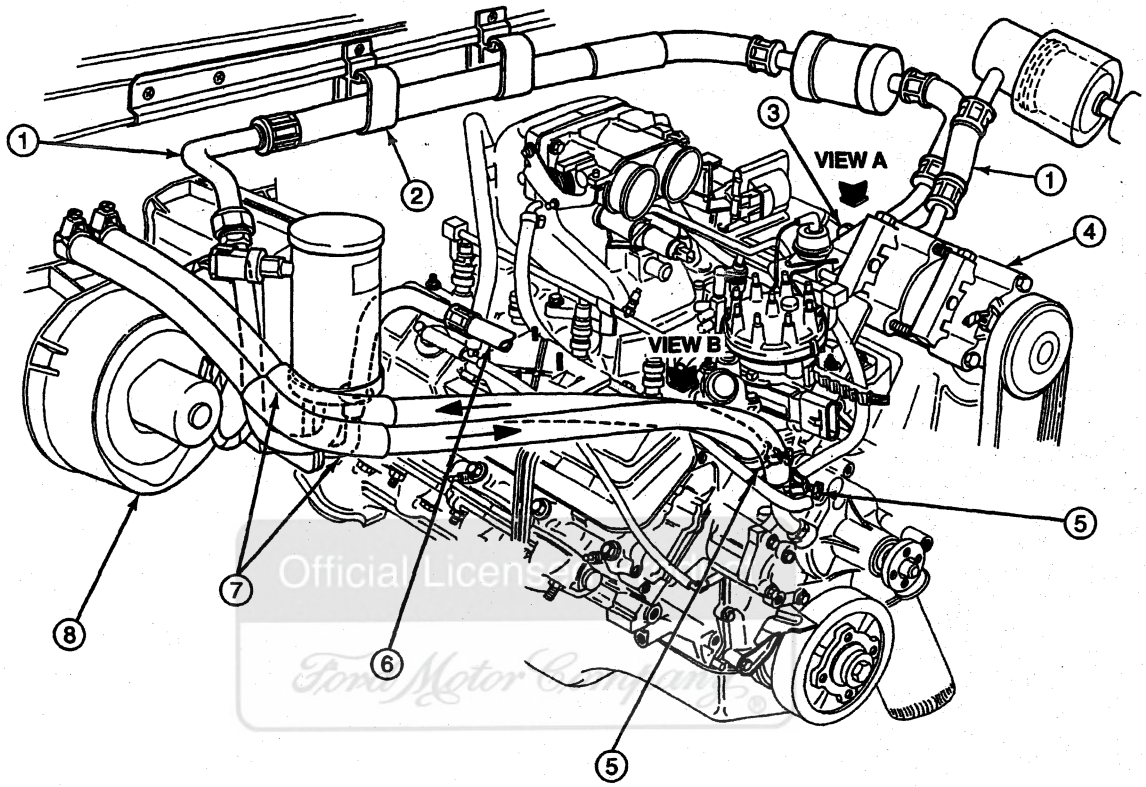

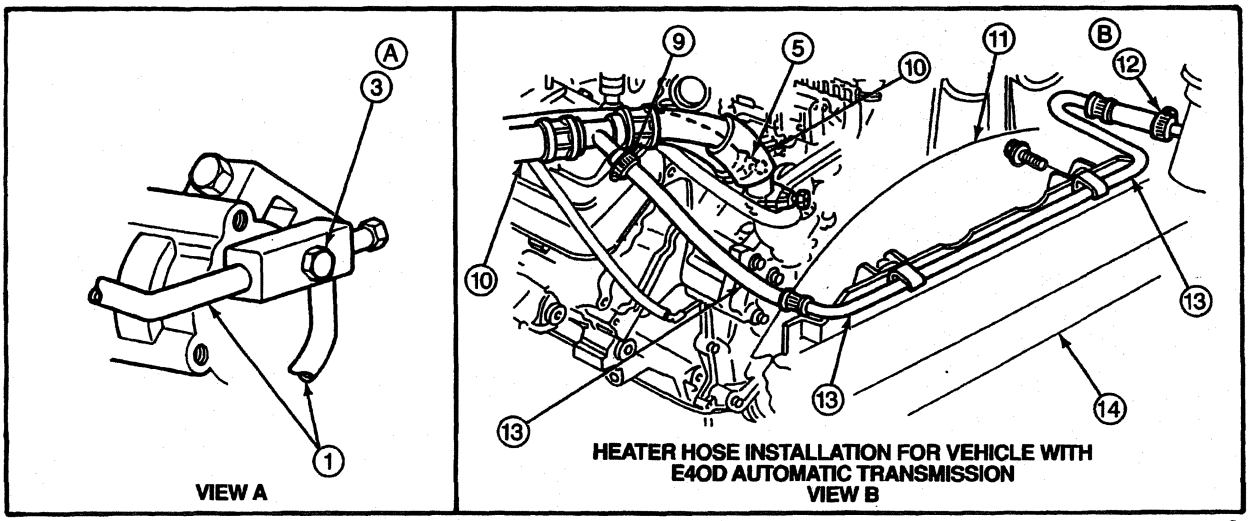

M4106-C

Item	Part Number	Description
1	19D734	A/C Manifold and Tube
2	19N704	A/C Compressor Hose Clip

(Continued)

Item	Part Number	Description
3	N805334-S2	Bolt
4	19703	A/C Compressor

(Continued)

REMOVAL AND INSTALLATION (Continued)

Item	Part Number	Description
5	19B679	A/C Hose Clamp
6	19835	Condenser to Evaporator Tube
7	18472	Heater Water Hose
8	19850	A/C Evaporator Housing
9	18472	Heater Water Hose
10	19B679	A/C Hose Clamp

(Continued)

Item	Part Number	Description
11	8146	Fan Shroud
12	376240-S100	Clamp
13	8548	Water Bypass Tube (E4OD)
14	8005	Radiator
A	—	Tighten to 17-23 N·m (13-17 Lb-Ft)
B	—	Tighten to 2-3 N·m (18-27 Lb-In)

ADJUSTMENTS

Temperature Control Cable

The A/C temperature cable (19988) requires no adjustment providing all components of the heating system are in the full warm position prior to installation.

Mini-Tube Vacuum Hose Service

Mini-tube vacuum hoses are provided in the vacuum hose harness (19C827) assemblies. They provide greater flexibility with less tendency to collapse and are less susceptible to pinching. Service of damaged hoses is easily made using a short piece of standard 3-mm (0.125-inch) inner diameter vacuum hose and inserting the cut ends of the mini-tube into th ends of the standard 3-mm (0.125-inch) inner diameter vacuum hose. The following illustrates an in-line and tee connector installation.

1. Measure length of damaged area of the mini-tube vacuum hose.
2. Cut a piece of standard 3-mm (0.125-inch) inner diameter vacuum hose approximately 25 mm (1 inch) longer than damaged area of the mini-tube vacuum hose.
3. Cut off the mini-tube vacuum hose on each side of damaged area.
4. **WARNING: READ THE WARNING INFORMATION ON THE PRODUCT LABEL.**

   Dip the mini-tube hose ends in commercially available paint thinner containing Methyl Ethyl Ketone (MEK). This solvent will seal the mini-tube in the vacuum hose.
5. Insert ends of the mini-tube vacuum hose approximately 9 mm (0.375 inch) into ends of standard 3-mm (0.125-inch) service vacuum hose section.
6. Shake service joint after assembly to make sure solvent is dispersed and vacuum line is not plugged.
7. Test system for a vacuum leak in service area using Rotunda Vacuum Tester 014-R1054 or equivalent.

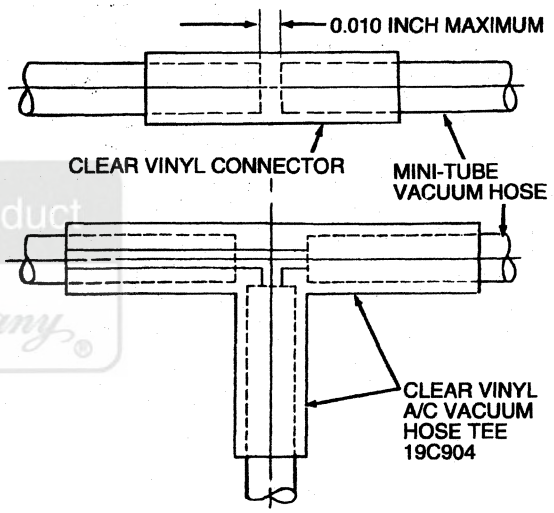

SPECIFICATIONS

ELECTRICAL SPECIFICATIONS

Blower Motor Current Draw and Voltages		
Switch Setting	**Amps**	**Volts**
Low	3-5	3-4
Medium Low	6-8	5-7
Medium High	10-14	7-10
High	15-22	11-14
Control Assembly, Illumination	One ICP-161 Bulb	
Blower Circuit System Protection	30 Amp Mini-Fuse (Light Green) in Panel F-14 (D9ZB-14A094-GA)	

Ford Licensed Product Company

SPECIFICATIONS (Continued)

TORQUE SPECIFICATIONS

Description	N·m	Lb-Ft	Lb-In
Heater Hose Clamps	2-3	—	18-27
Heater Air Plenum Chamber Screws	2.5-3.0	—	22-27
Heater Hose Bracket Retaining Screw	7-11	—	62-97
A/C Manifold and Tube Retaining Bolt	17-23	13-17	—

SPECIAL SERVICE TOOLS/EQUIPMENT

SPECIAL SERVICE TOOLS REQUIRED

Tool Number/ Description	Illustration
T94P-18532-A Temperature Control Cable Removal Tool	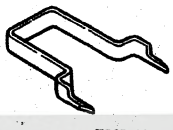 T94P-18532-A

SPECIAL SERVICE TOOLS DESIRED

Tool Number	Description
D92T-19703-A	A/C Louver Assembly Remover

ROTUNDA EQUIPMENT

Model	Description
014-R1054	Vacuum Tester

Official Licensed Product
Ford Motor Company

SECTION 12-03A Air Conditioning System, Manual A/C-Heater

SUBJECT	PAGE
VEHICLE APPLICATION	12-03A-1
DESCRIPTION AND OPERATION	
A/C Evaporator Core Housing	12-03A-9
A/C Evaporator Housing	12-03A-11
A/C Evaporator/Blower Motor Housing	12-03A-11
A/C Pressure Cut-Off Switch	12-03A-23
A/C-Heater System, Manual	12-03A-3
Climate Control Assembly	12-03A-7
A/C Switch	12-03A-9
Airflow Control	12-03A-8
Blower Motor Control	12-03A-9
Temperature Control	12-03A-8
Defroster and Register Ducts	12-03A-11
Electrical System	12-03A-13
Heater Blower Motor Switch Resistor	12-03A-9
Blower Motor Thermal Limiter	12-03A-9
Heating System	12-03A-6
Instrument Panel Registers	12-03A-9
R-134a Refrigerant System	12-03A-2
Refrigerant System	12-03A-18
A/C Compressor	12-03A-23
A/C Compressor Pressure Relief Valve	12-03A-23
A/C Condenser Core	12-03A-21
A/C Cycling Switch	12-03A-21
A/C Evaporator Core	12-03A-20
A/C Evaporator Core Orifice	12-03A-20
Service Access Gauge Port Valves	12-03A-20
Spring Lock Coupling	12-03A-23
Suction Accumulator/Drier	12-03A-20
System Airflow Description	12-03A-13
DEFROST	12-03A-18
Vacuum Control Motors	12-03A-12
Vacuum Hoses	12-03A-13
Ventilation System	12-03A-6
DIAGNOSIS AND TESTING	
Air Conditioning System, Manual	
A/C-Heater	12-03A-24
Inspection and Verification	12-03A-24
Pinpoint Test	12-03A-25
Symptom Chart	12-03A-24
Electrical Schematic Reference(s)	12-03A-24
REMOVAL AND INSTALLATION	
A/C Compressor	12-03A-59
A/C Compressor Relief Valve	12-03A-65
A/C Condenser Core	12-03A-50
A/C Cycling Switch	12-03A-48
A/C Evaporator Core	12-03A-38
A/C Evaporator Core Housing	12-03A-36
A/C Evaporator Core Orifice	12-03A-48

SUBJECT	PAGE
REMOVAL AND INSTALLATION (Cont'd.)	
A/C Manifold and Tube	12-03A-64
A/C Pressure Cut-Off Switch	12-03A-49
A/C System Filtering	12-03A-63
A/C Vacuum Reservoir Tank and Bracket	12-03A-65
Blower Motor Switch Resistor	12-03A-40
Cables	12-03A-34
Temperature Control Cable	12-03A-34
Climate Control Assembly	12-03A-31
Function Selector Switch	12-03A-33
Heater Blower Motor Switch	12-03A-33
Illumination Bulbs	12-03A-32
Switch Knobs	12-03A-33
Doors	12-03A-45
A/C Air Temperature Control	12-03A-45
Heater and A/C Inlet Duct	12-03A-45
Ducts	12-03A-43
Demister Nozzle and Duct	12-03A-44
Heater Outlet Floor Duct	12-03A-44
Register	12-03A-44
Heater Air Plenum Chamber	12-03A-40
Heater Blower Motor and Blower Motor Wheel Assembly	12-03A-39
Heater Core	12-03A-38
Heater Water Hoses	12-03A-54
Instrument Panel	12-03A-36
Instrument Panel Register Assemblies	12-03A-40
Louvers	12-03A-40
Refrigerant Lines	12-03A-52
Discharge Lines	12-03A-53
Liquid Lines	12-03A-53
Suction Lines	12-03A-52
Refrigerant Oil Addition	12-03A-29
During A/C Compressor Replacement	12-03A-29
During Component Replacement	12-03A-30
Spring Lock Coupling	12-03A-30
Suction Accumulator/Drier	12-03A-48
Vacuum Control Motors	12-03A-47
Heater and A/C Inlet Duct Door	12-03A-47
Windshield Defroster Door	12-03A-47
ADJUSTMENTS	
A/C Compressor Drive Belt Tension	12-03A-65
Cables	12-03A-65
A/C Temperature Control Cable	12-03A-65
Mini-Tube Vacuum Hoses	12-03A-65
SPECIFICATIONS	12-03A-65
SPECIAL SERVICE TOOLS/EQUIPMENT	12-03A-66

VEHICLE APPLICATION

F-250 Heavy Duty, F-350 and F-Super Duty

DESCRIPTION AND OPERATION

R-134a Refrigerant System

WARNING: AVOID BREATHING A/C REFRIGERANT AND LUBRICANT VAPOR OR MIST. IF ACCIDENTAL SYSTEM DISCHARGE OCCURS, VENTILATE THE WORK AREA BEFORE RESUMING SERVICE.

WARNING: LIQUID R-134A REFRIGERANT, AT NORMAL ATMOSPHERIC PRESSURES AND TEMPERATURES, EVAPORATES SO QUICKLY THAT IT HAS A TENDENCY TO FREEZE ANYTHING IT COMES IN CONTACT WITH. EXTREME CARE MUST BE TAKEN TO PREVENT ANY REFRIGERANT FROM COMING IN CONTACT WITH THE SKIN AND ESPECIALLY THE EYES.

WARNING: WEAR IMPERVIOUS GLOVES AND SAFETY GOGGLES AT ALL TIMES WHEN SERVICING THE A/C SYSTEM. SHOULD REFRIGERANT COME IN CONTACT WITH THE EYES OR SKIN, IMMEDIATELY FLUSH THE AREA WITH PLENTY OF WATER FOR AT LEAST 15 MINUTES. REMOVE ANY CONTAMINATED CLOTHING AND SHOES. CALL A PHYSICIAN.

WARNING: R-134A IS ALWAYS UNDER PRESSURE. BECAUSE THE SYSTEM IS TIGHTLY SEALED, HEAT APPLIED TO ANY PORTION OF THE A/C SYSTEM, COULD RESULT IN EXCESSIVE PRESSURE. TO AVOID A DANGEROUS EXPLOSION, KEEP AWAY FROM OPEN FLAMES AND GLOWING METAL SURFACES. THE A/C SYSTEM SHOULD ALSO BE PROTECTED FROM EXCESSIVE HEAT DURING ANY STEAM CLEANING OR MIG WELDING OPERATIONS. R-134A CAN DECOMPOSE AT HIGH TEMPERATURE.

CAUTION: R-12 refrigerant and refrigerant lubricants are not compatible with R-134a systems. The use of R-12 refrigerant and refrigerant oil in a system designed for R-134a use can result in system damage. R-134a system service requires the use of tools designed specifically for use in R-134a system servicing. Tools designed for use in R-12 systems can result in damage to R-134a systems or components. Also the use of R-134a refrigerant, lubricants and tools on an R-12 system can result in component or system damage.

CAUTION: The refrigerant used in this system is R-134a, which is a hydrofluorocarbon as opposed to R-12 refrigerant which is a chlorofluorocarbon. These two refrigerants should NEVER be mixed. Mixing these two refrigerants can result in system failure and component damage.

CAUTION: The refrigerant used in this system is HFC-134a (Tetrafluoroethane) which is a hydrofluorocarbon refrigerant. HFC-134a, also known as R-134a, is non-corrosive, non-explosive and non-flammable. R-134a is heavier than air. Although classified as a safe refrigerant, certain precautions must be observed to protect the parts involved and the technician working on the unit.

CAUTION: Use only R-134a refrigerant. Due to environmental concerns, when the air conditioning system is drained, the refrigerant must be collected using refrigerant recovery/recycling equipment meeting SAE J1990 and J2210 standards. R-134a must never be removed without the appropriate equipment or released into the atmosphere. Use of a recovery machine dedicated for R-134a is necessary to reduce the possibility of oil and refrigerant compatibility concerns. Refer to the instructions provided by the equipment manufacturer when removing refrigerant or charging the air conditioning system.

CAUTION: Make sure that containers are never heated to over 52°C (125°F). Containers should be stored and installed in accordance with all state and local ordinances.

CAUTION: When admitting R-134a into the refrigerant system, keep the tank in an upright position. If the tank is on its side or upside down, liquid R-134a can enter the system and damage the compressor.

CAUTION: R-134a should not be mixed with air for leak testing or used with air for any purpose above atmospheric pressure. R-134a is combustible when mixed with high concentrations of air and high pressure.

Prompted by environmental concerns, Ford Motor Company is now producing vehicles equipped with non-chlorofluorocarbon (non-CFC) air conditioning systems. The refrigerant used is R-134a, a hydrofluorocarbon that has no chlorine molecule, a substance that destroys the atmosphere's ozone layer. R-134a is used in all Ford Motor Company vehicles equipped with air conditioning systems. R-134a systems function in the same manner as an R-12 system except for minimal operating pressure differences and component variations.

It is important to understand that R-134a and R-12 systems are not entirely the same. They have components that are slightly different from one another, and in some cases, different service requirements. However, the most important thing to understand is, R-134a refrigerant, refrigerant oil and components can only be used on R-134a A/C systems while R-12 refrigerant, refrigerant oil and components can only be used on R-12 A/C systems. While these two types of systems operate and function in a nearly identical manner, the refrigerant, refrigerant oil and components used in these systems are not compatible.

Also, R-134a systems require the use of dedicated special service tools and equipment. R-134a special service tools and equipment that come in contact with R-134a refrigerant or refrigerant oil can only be used on R-134a systems. R-12 special service tools and equipment cannot be used on R-134a A/C systems and vice versa.

DESCRIPTION AND OPERATION (Continued)

A/C-Heater System, Manual

Most of the major components of the manual air conditioning/heater system are identified in the following illustrations.

The system is equipped with:

- a plate-fin A/C evaporator core (19860) and attached suction accumulator/drier (19C836).
- an A/C evaporator core orifice (19D990) for control of refrigerant flow.
- an A/C cycling switch (19E561).

Two quick disconnect R-134a service access gauge ports are used in the manual air conditioning/heater system. The high pressure gauge port is located near the A/C condenser core (19712) in the A/C manifold and tube (19D734) (discharge side) and has a quick disconnect-type valve body. This requires a special high pressure service access valve adapter (Rotunda R-134a High-Side Quick Disconnect E176-R0037 or equivalent) to connect a gauge set or a charging station to the port. The other service access gauge port is located on the inlet to the suction accumulator and also requires a quick disconnect-type adapter (Rotunda R-134a Low-Side Quick Disconnect 176-R0036 or equivalent). This fitting is used to measure pressure in the A/C evaporator core.

Air Conditioning System

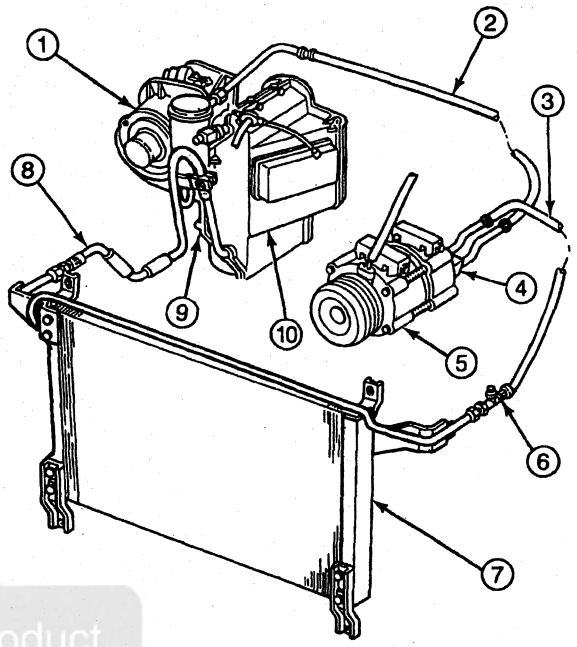

M4208-D

Item	Part Number	Description
1	18527	Blower Motor
2	—	Suction Line (Part of 19D734)
3	—	Discharge Line (Part of 19D734)
4	19D734	A/C Manifold and Tube
5	19703	A/C Compressor
6	—	High Pressure Service Valve (Part of 19972)
7	19712	A/C Condenser Core
8	19835	Condenser to Evaporator Tube
9	19930	A/C Blower Housing
10	19B735	A/C Evaporator Case Cover

Uncensored Product
Ford Motor Company

DESCRIPTION AND OPERATION (Continued)

Condenser Installation, F-Super Duty Motorhome

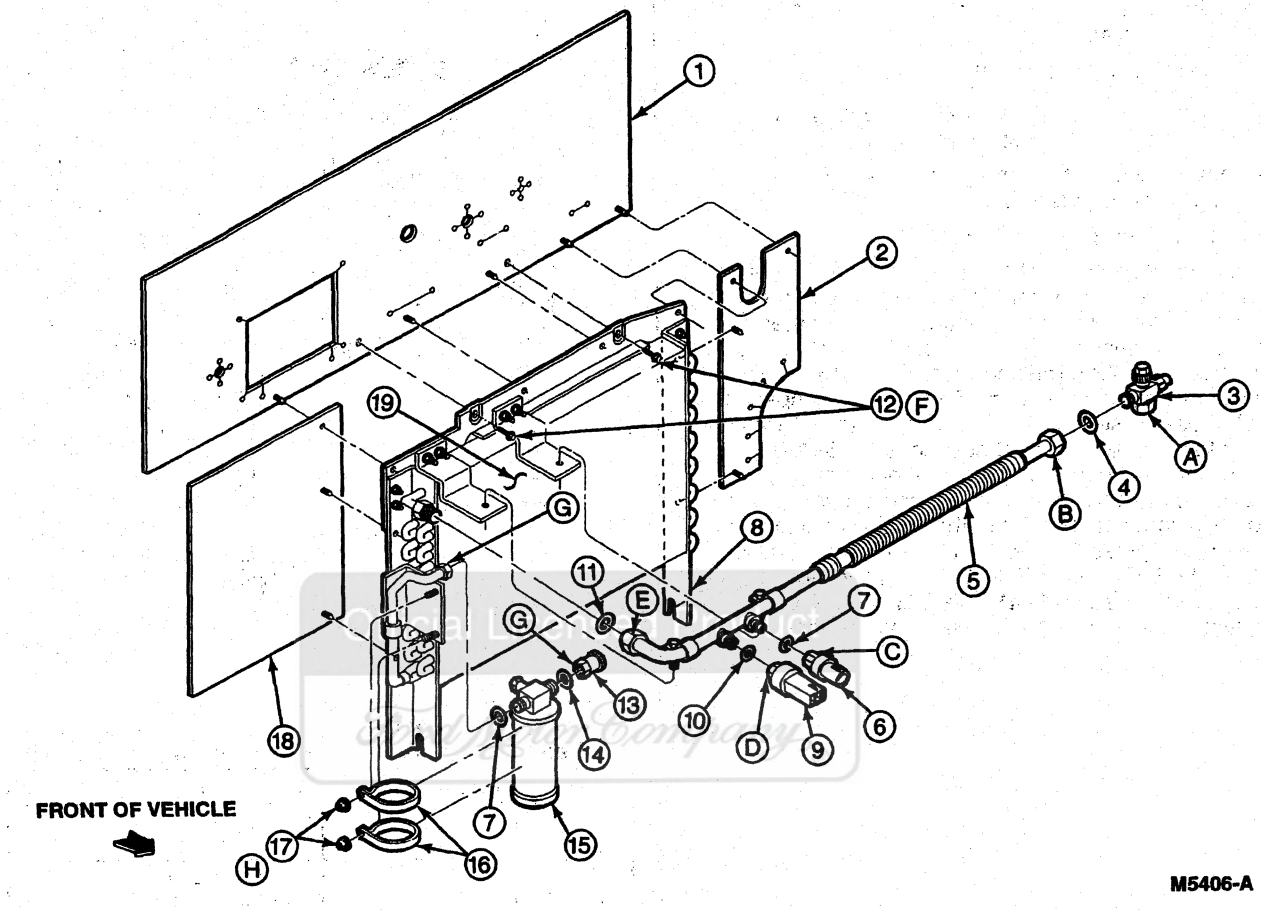

Item	Part Number	Description
1	19T554	A/C Condenser Seal (Upper)
2	19T557	A/C Condenser Seal (LH)
3	19762	A/C Compressor Discharge Valve Assy
4	391397-S100	O-Ring (0.405 x 0.076)
5	19972	A/C Compressor to Condenser Discharge Line
6	19D594	A/C Pressure Cut-Off Switch
7	391396-S100	O-Ring (0.295 x 0.74)
8	19N656	A/C Condenser Bracket
9	19E561	A/C Cycling Switch
10	N807083-S	O-Ring (8.15 x 2.0)
11	391397-S100	O-Ring (0.405 x 0.076)
12	N606691-S2	Bolt (M8 x 1.25 x 35)
13	19947	A/C Dehydrator and Receiver Coupling
14	N807114-S	O-Ring (9.37 x 1.85)

(Continued)

Item	Part Number	Description
15	19959	A/C Dehydrator and Receiver Tank
16	19B937	A/C Dehydrator Tank Mounting Bracket
17	34659-S36	Nut and Washer (1/4-20)
18	19T556	A/C Condenser Seal
19	19712	A/C Condenser Core
A	—	Tighten to 32-40 N·m (24-30 Lb-Ft)
B	—	Tighten to 53-67 N·m (39-49 Lb-Ft)
C	—	Tighten to 7-13 N·m (62-115 Lb-In)
D	—	Tighten to 1.5 N·m (13 Lb-In)
E	—	Tighten to 15-17 N·m (11-13 Lb-Ft)
F	—	Tighten to 21-32 N·m (15-24 Lb-Ft)

(Continued)

DESCRIPTION AND OPERATION (Continued)

Item	Part Number	Description
G	—	Tighten to 15-18 N·m (11-13 Lb-Ft)

Item	Part Number	Description
H	—	Tighten to 7-9 N·m (62-80 Lb-In)

(Continued)

System Block Diagram — Evaporator Case, Plenum Assembly

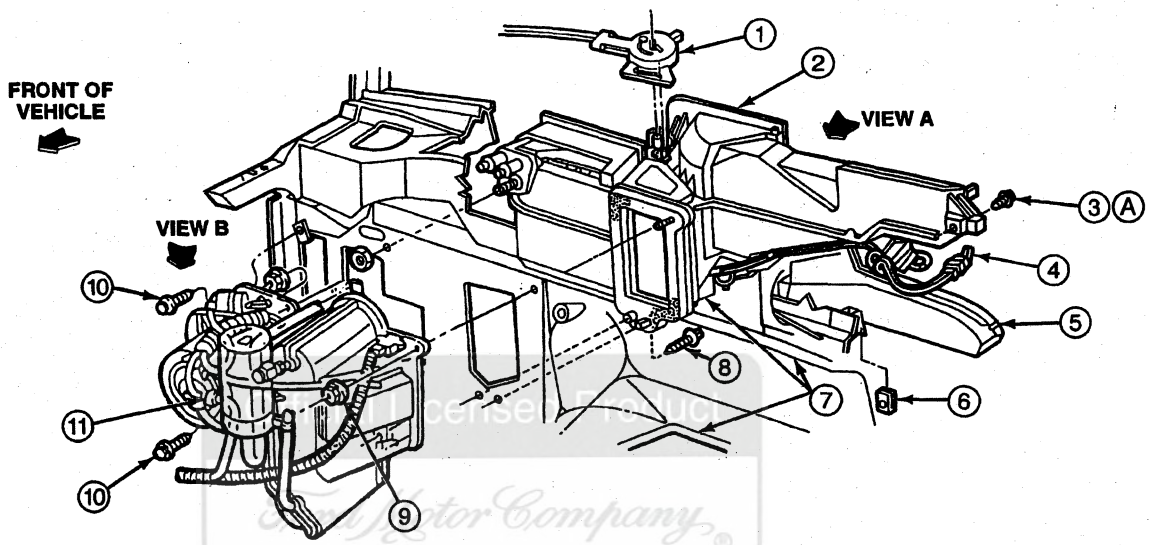

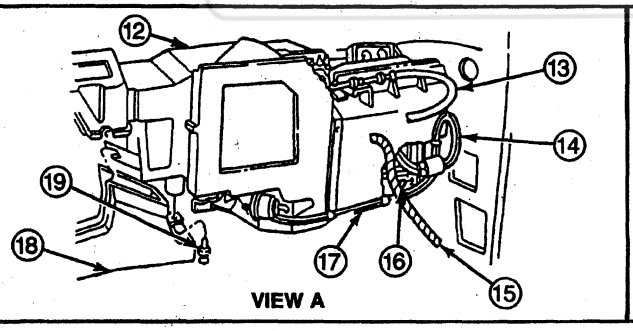

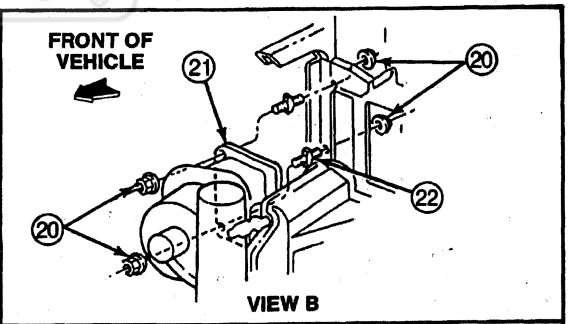

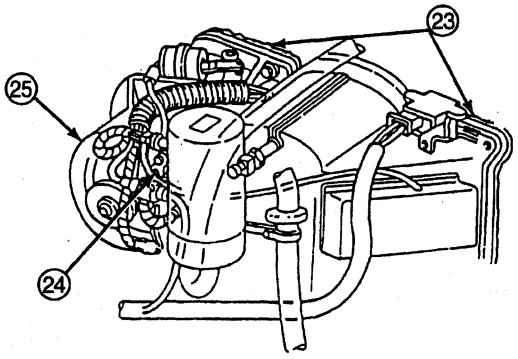

FRONT OF VEHICLE

VIEW SHOWING INSTALLATION OF AIR CONDITIONING AND MAP SENSOR WIRING FOR 7.3L DIESEL ENGINE WITH E4OD TRANSMISSION AND ALL GAS ENGINES

M5038-B

DESCRIPTION AND OPERATION (Continued)

Item	Part Number	Description
1	19988	A/C Temperature Cable
2	18471	Heater Air Plenum Chamber
3	56950-S2	Screw
4	18C581	A/C Plenum Vacuum Harness
5	18C433	Heater Outlet Floor Duct
6	45261-S2	J-Nut
7	01610	Dash Panel
8	56956-S2	Screw
9	N801969-S2	Nut
10	56956-S2	Hex Screw and Washer Assy
11	—	Locator (Part of 14401)
12	18471	Heater Air Plenum Chamber
13	—	Attaches to (Part of 18471) FAO End Item
14	—	Wiring Retainer (Part of 18456)
15	—	Locator (Part of 14401)
16	—	Wiring (Part of 18456)
17	—	Control Vacuum Harness (Part of 19C827)
18	18C433	Heater Outlet Floor Duct
19	N803946-S	Rivet
20	N612906-S2	Nut
21	18A484	Heater Plenum Chamber Case
22	N803912-S2	Stud
23	—	Retention Tab (Part of 19D674)
24	N801696-S2	Nut
25	18527	Blower Motor
A	—	Tighten to 2.5-3.0 N·m (22-27 Lb-In)

(Continued)

Official Licensed Product
Ford Motor Company

The A/C evaporator case (19897) is attached to the engine side of the dash panel. It contains the:

- A/C evaporator core
- suction accumulator/drier
- blower motor (18527)
- heater blower motor switch resistor (18591)
- A/C damper inlet door (19C802) and its vacuum control motor (18A318)
- A/C vacuum reservoir tank and bracket (19A566)
- vacuum/electrical wiring harness assemblies

The suction accumulator/drier is clamped to the A/C evaporator case with its inlet tube connected to the outlet tube. The air conditioner A/C cycling switch is installed to a fitting on the side of the suction accumulator/drier. The inlet tube to the A/C evaporator core contains the A/C evaporator core orifice tube.

- heater core (18476)
- vacuum control motors (18A318) that operate the mix and panel/defrost doors.

The windshield defroster hose nozzle (18490) is formed into the instrument panel with outlets to the windshield and hoses that attach to an adapter located in the center of the instrument panel (04320) for demisting.

The A/C control (19980) is installed in an opening in the instrument panel. It contains three knobs (18519). One knob operates the four-position heater blower motor switch (18578) and one function selector switch that selects the function under which the system will perform (OFF, MAX A/C, NORM A/C, VENT, FLOOR, MIX or DEFROST) by controlling the vacuum control valve that controls the vacuum logic. The third knob regulates temperature by means of an A/C temperature cable (19988) that controls the position of the temperature blend air door.

Heating System

The heater air plenum chamber (18471) is located in the passenger compartment. It contains the:

- mix door (for directing a mixture or total air to the floor and/or defroster/demister outlets)
- temperature blend door
- panel/defrost door
- cam/crank that operates the temperature door

Ventilation System

By placing the function control knob (18519) in the VENT position, the climate control system operates an air door within the heater air plenum chamber (18471) that directs outside air through the A/C evaporator housing (19850), into the heater air plenum chamber and out through the registers located in the instrument panel (04320). The volume of air discharged through the instrument panel registers can be controlled by the heater blower motor switch (18578), and temperature can be controlled through the temperature control knob.

DESCRIPTION AND OPERATION (Continued)

Climate Control Assembly

The A/C control (19980) is installed in the center of the instrument panel (04320).

It includes the control assembly with one knob-operated A/C temperature cable (19988) for selecting temperature. A second knob moves a selector valve that activates the various function doors and air conditioner electrical contacts. A third knob moves electrical switch contacts so that they establish continuity for one of four available positions between LOW and HIGH speed of the blower.

Air can be distributed through the instrument panel registers, the heater outlet floor ducts (18C433), and the windshield defroster hose nozzles (18490) depending upon the position of the function selector knob. Airflow to the side window demisters occurs in all knob settings.

The following chart and illustration show the vacuum system and how it controls the three airflow doors:

- floor/defrost (also called defrost door)
- panel/defrost (also called panel door)
- outside/recirc. (also called recirc. door)

FUNCTION SELECTOR SWITCH DETENT POSITIONS

Port	Function	MAX A/C	NORM A/C	VENT	OFF	FLOOR	MIX	DEF.
1 (Yellow)	Panel	V	V	V	V	V	V	A
2 (Black)	Source	V	V	V	V	V	V	V
3 (Blue)	Mix	V	V	V	A	A	A	A
4 (White)	Recirc.-O/S Air	V	A	A	V	A	A	A
5 (Not Used)	—	—	—	—	—	—	—	—
6 (Red)	Full Floor	V	V	V	V	V	A	A

V = Vacuum
A = Atmosphere

Official Licensed Product
Ford Motor Company

DESCRIPTION AND OPERATION (Continued)

Vacuum System Diagram

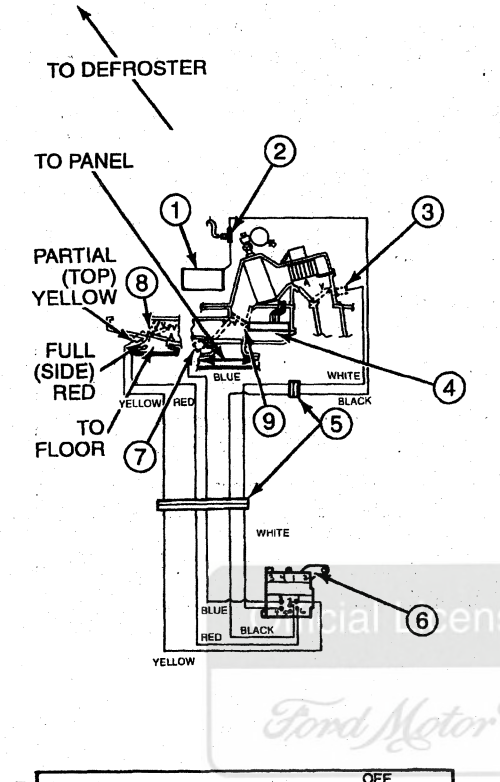

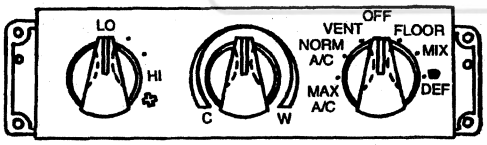

DM0062-A

Item	Part Number	Description
1	19A566	A/C Vacuum Reservoir Tank and Bracket
2	19A563	A/C Vacuum Check Valve
3	—	Outside-Recirculation Door (White) (Part of Vacuum Harness)
4	18476	Heater Core
5	—	Vacuum Harness Connector (Part of Vacuum Harness)
6	19980	A/C Control
7	—	Panel Door (Blue) (Part of Vacuum Harness)
8	—	Floor Defrost Door (Part of 18471)
9	—	Temperature Blend Door (Part of 18471)

Airflow Control

When the function selector knob (18519) is in the A/C (MAX and NORM) and VENT positions, air flows out of the panel registers. Moving the function knob to the FLOOR position directs airflow to the heater outlet floor ducts with a slight bleed to the windshield defroster hose nozzles. The MIX position splits the air between the heater outlet floor ducts and the windshield defroster hose nozzles, and DEFROST position directs airflow to the windshield defroster hose nozzles with a slight bleed to the heater outlet floor ducts.

Airflow Through Duct System

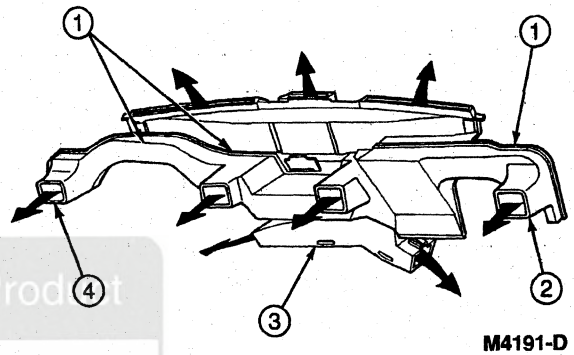

M4191-D

Item	Part Number	Description
1	19E726	A/C Instrument Panel Duct and Support
2	04320	Instrument Panel
3	18C433	Heater Outlet Floor Duct
4	—	Instrument Panel Ducts (Part of 19E726)

The function knob actuates a vacuum selector valve that controls the movement of the door.

In the NORM A/C, VENT, FLOOR, MIX and DEFROST positions, outside air is drawn into the system by the blower motor (18527). In the OFF and MAX A/C positions, the recirculation door is positioned so that outside air cannot pass into the A/C evaporator case (19897). In the case of MAX A/C, passenger compartment air is recirculated. In OFF position, blower motor does not operate.

Temperature Control

Temperature is controlled by a manually operated air blend door in the heater air plenum chamber (18471). When the temperature control knob is in the extreme COOL position (fully counterclockwise) all air bypasses the heater core (18476).

Unofficial Licensed Product
Ford Motor Company

DESCRIPTION AND OPERATION (Continued)

When the temperature control knob is moved to the extreme WARM (fully clockwise) position, all air is directed through the heater core. When the temperature control knob is between COOL and WARM (between full counterclockwise and clockwise), air is directed through and bypasses the heater core in rough proportion to the position of the temperature control knob between the extremes of its travel.

Blower Motor Control

Speed is controlled by a four-position heater blower motor switch (18578) and a heater blower motor switch resistor (18591) located in the A/C evaporator case upstream from the A/C evaporator core (19860).

The switch is used to select LOW, two intermediate, and HIGH speed settings. The heater blower motor switch is turned off by rotating the function selector knob to its OFF position.

A/C Switch

The air conditioning system is turned on and off by the function selector switch. When the function selector knob is positioned in any A/C mode (MAX or NORM), and the engine is running, electrical current flows through the A/C cycling switch (19E561) to the A/C clutch field coil (2987), the A/C clutch (2884) engages and the air conditioning system operates (providing ambient air temperatures are above a prescribed temperature). When the function selector knob is set in the DEFROST or MIX positions and the same above conditions are met, the A/C system will also operate. This allows the operator to select the proper air temperature (when the temperature control is adjusted) for defogging the windshield and side glass when necessary, by taking advantage of the dehumidification benefits of the air conditioning system. When the function selector is placed in any other position, current is stopped to the air conditioning circuit and the A/C compressor (19703) ceases operation.

Heater Blower Motor Switch Resistor

A heater blower motor switch resistor (18591) with a thermal limiter is mounted in the engine compartment. The heater blower motor switch resistor is used with the heater blower motor switch (18578) to obtain the desired fan speed.

Blower Motor Thermal Limiter

The thermal limiter in the heater blower motor switch resistor serves as a temperature sensitive fuse. When the thermal limiter is opened, the heater blower motor switch resistor must be replaced.

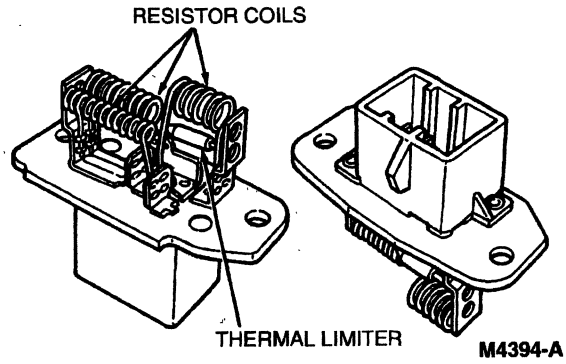

Instrument Panel Registers

The louvers in the registers can be adjusted to direct air as desired. The louvers can also be closed to block most of the airflow.

A/C Evaporator Core Housing

The A/C evaporator housing (19850) is attached to the engine side of the dash panel.

The A/C evaporator case (19897) is a two-piece molded construction, one piece of which forms a cover over the A/C evaporator core (19860). A bolt on the A/C vacuum reservoir tank and bracket (19A566) is part of the cover housing. This A/C vacuum reservoir tank and bracket and the vacuum control motor (18A318), which operates the outside/recirc. air door, are linked through an A/C vacuum check valve (19A563) to a hose that supplies engine vacuum.

DESCRIPTION AND OPERATION (Continued)

Evaporator Case and Heater Plenum Chamber Case

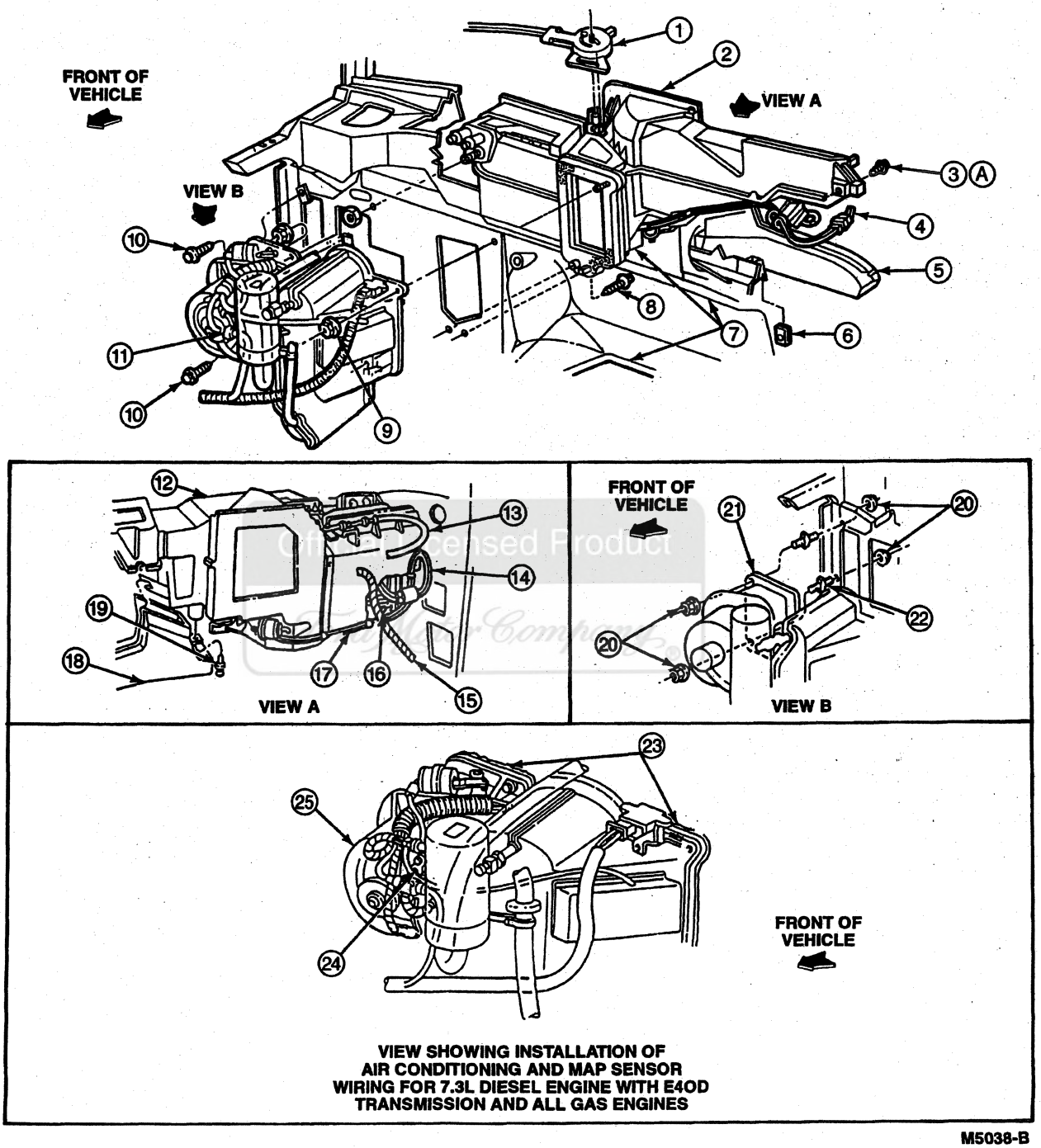

VIEW SHOWING INSTALLATION OF AIR CONDITIONING AND MAP SENSOR WIRING FOR 7.3L DIESEL ENGINE WITH E4OD TRANSMISSION AND ALL GAS ENGINES

M5038-B

Item	Part Number	Description
1	19988	A/C Temperature Cable
2	18471	Heater Air Plenum Chamber
3	56950-S2	Screw

(Continued)

Item	Part Number	Description
4	18C581	A/C Plenum Vacuum Harness
5	18C433	Heater Outlet Floor Duct
6	45261-S2	J-Nut

(Continued)

DESCRIPTION AND OPERATION (Continued)

Item	Part Number	Description
7	01610	Dash Panel
8	56956-S2	Screw
9	N801969-S2	Nut
10	56956-S2	Hex Screw and Washer Assy
11	—	Locator (Part of 14401)
12	18471	Heater Air Plenum Chamber
13	—	Attaches to (Part of 18471) NAAO End Item
14	—	Wiring Retainer (Part of 18456)
15	—	Locator (Part of 14401)
16	—	Wiring (Part of 18456)
17	—	Control Vacuum Harness (Part of 19C827)

(Continued)

Item	Part Number	Description
18	18C433	Heater Outlet Floor Duct
19	N803946-S	Rivet
20	N612906-S2	Nut
21	18A484	Heater Plenum Chamber Case
22	N803912-S2	Stud
23	—	Retention Tab (Part of 19D674)
24	N801696-S2	Nut
25	18527	Blower Motor
A	—	Tighten to 2.5-3.0 N·m (22-27 Lb-In)

A/C Evaporator Housing

The heater air plenum chamber (18471) is mounted to the dash panel in the passenger compartment. It contains the heater core (18476), temperature blend door, floor/panel door and the floor/defrost door. The temperature blend door is controlled through a cable actuated cam located on top of the heater air plenum chamber. The floor/panel and floor/defrost doors are both controlled by vacuum control motors (18A318) located on the bottom of the heater air plenum chamber.

The heater core is located in the heater air plenum chamber behind the heater core cover. The heater core cover (18B300) allows the heater core to be removed without removing the heater air plenum chamber.

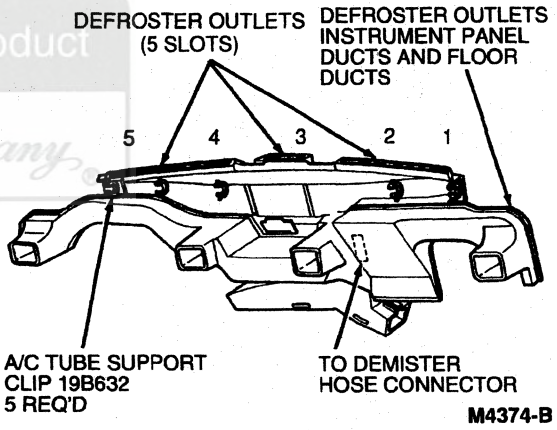

A/C Evaporator/Blower Motor Housing

The A/C blower housing (19930) is an integral part of the A/C evaporator case (19897). It houses the blower motor (18527) and attaches to the A/C evaporator case through a mounting flange on the blower motor.

The heater blower motor switch resistor (18591) is attached to the A/C evaporator case with its thermal elements extending into the air stream inside the A/C evaporator case. The suction accumulator/drier is attached to the A/C evaporator core (19860) by a support bracket.

Defroster, Demister and Register Ducts

The windshield defroster hose nozzle (18490) and ventilation ducts are a two-piece adhesively bonded construction attached as an assembly to the instrument panel (04320). Refer to Section 01-12 for details regarding instrument panel service.

Defroster and Register Ducts

The following illustration shows the parts which make up the side window demister system. A separate nozzle attaches to a register which is molded into each end of the instrument panel (04320). A separate hose leads from each nozzle to a connector attached to the center air duct.

DESCRIPTION AND OPERATION (Continued)

Demister Nozzles and Hoses

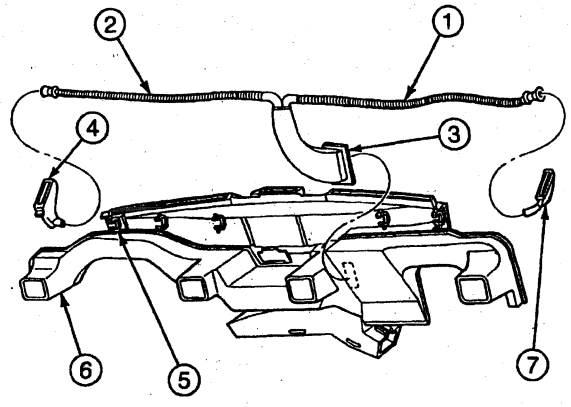

M4199-C

Item	Part Number	Description
1	19E630	A/C Side Window Demister and Hose (Right)
2	19E630	A/C Side Window Demister and Hose (Left)
3	19E680	A/C Demister Hose Connector
4	—	Left Demister Nozzle (Part of 19E659)
5	19B632	A/C Accumulator Tube Support Clip
6	—	Defroster Outlets, Instrument Panel Ducts, and Floor Ducts (Part of 19E727)
7	—	Right Demister Nozzle (Part of 19E658)

The register ducts are three one-piece molded parts that attach to the underside of the instrument panel.

The ducts feed four registers in the instrument panel. One register is located on each side of the instrument cluster and one register is located immediately to the right and left of the glove compartment. The louver assemblies are serviceable from the passenger compartment.

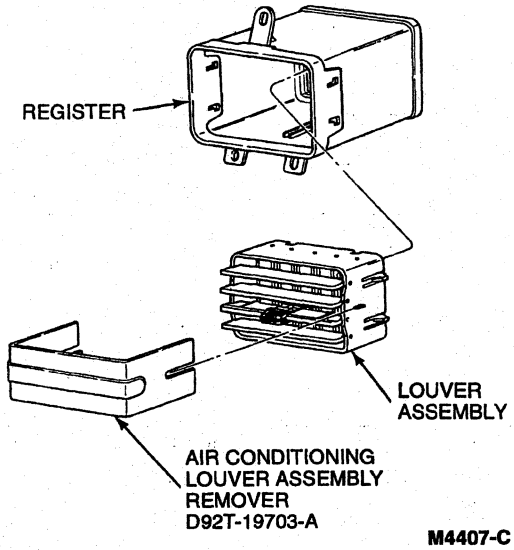

M4407-C

Vacuum Control Motors

The outside air / recirculated air door is located in the A/C evaporator case (19897). It is operated by a vacuum control motor (18A318) in response to movement of the function air control knob (18519).

When the knob is in the NORM, A/C, VENT, FLOOR, MIX and DEFROST positions, the door is open to admit outside air; when the knob is in the OFF or MAX A/C position, the door is moved by vacuum to shut off outside air and open the passageway so that inside air can be recirculated through the system.

DESCRIPTION AND OPERATION (Continued)

Outside Air/Recirculated Air Door and Vacuum Control Motor

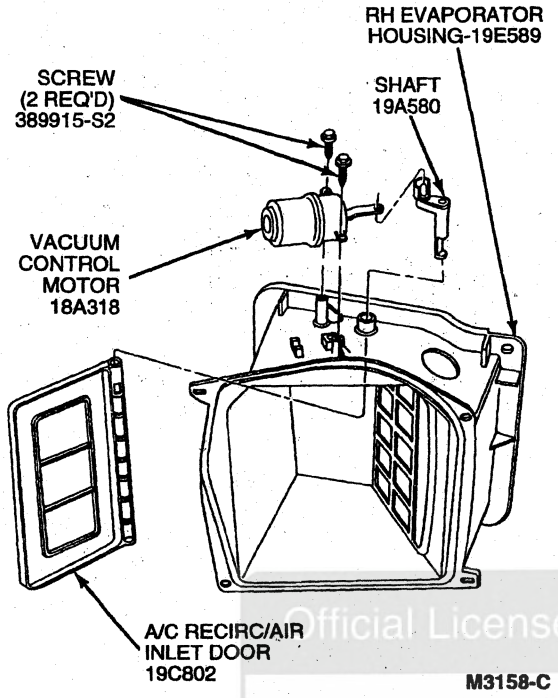

Vacuum Hoses

An A/C vacuum hose harness (19C827) completes the connections between the vacuum control switch mounted in the A/C control (19980), the vacuum control motors (18A318), and the A/C vacuum reservoir tank and bracket (19A566) where the A/C system receives its vacuum from the engine vacuum source.

Electrical System

The electrical system consists of the blower motor (18527), heater blower motor switch (18578), heater blower motor switch resistor (18591) with a thermal limiter, A/C cycling switch (19E561), A/C clutch (2884) and the fuse and wiring to complete the circuits.

The blower motor is installed in the A/C blower housing (19930), which is part of the A/C evaporator housing (19850). The blower motor is connected to the electrical circuit with one hardshell connector located near the blower motor.

The heater blower motor switch is installed on the A/C control (19980) and, when used with the heater blower motor switch resistor, provides the selection of four operating speeds.

The heater blower motor switch resistor is installed in the A/C evaporator case (19897) between the blower motor and the A/C evaporator core (19860).

The heater blower motor switch resistor also contains a thermal limiter that is used as a temperature-protecting fuse. The thermal limiter is located a preset distance from the resistor coils. If the temperature of the thermal limiter reaches approximately 121°C (250°F), the limiter contacts will open, interrupting the circuit for all speeds except high speed. The thermal limiter will not reset so the heater blower motor switch resistor must be replaced if the thermal limiter opens.

The A/C cycling switch is located on the side of the suction accumulator/drier (19C836) and controls cycling of the A/C clutch. When the pressure increases to approximately 276-324 kPa (40-47 psi), the A/C cycling switch closes. When the pressure drops below approximately 163-175 kPa (23.5-25.5 psi), the A/C cycling switch opens to stop compressor operation. In ambient temperatures below approximately 7°-10°C (45°-50°F), the A/C cycling switch will not allow compressor operation because the switch will open due to low system pressures.

System Airflow Description

The following airflow diagrams illustrate the path airflow takes in response to each functional setting of the function selector knob (18519).

Official Licensed Product Ford Motor Company

DESCRIPTION AND OPERATION (Continued)

Airflow Diagram

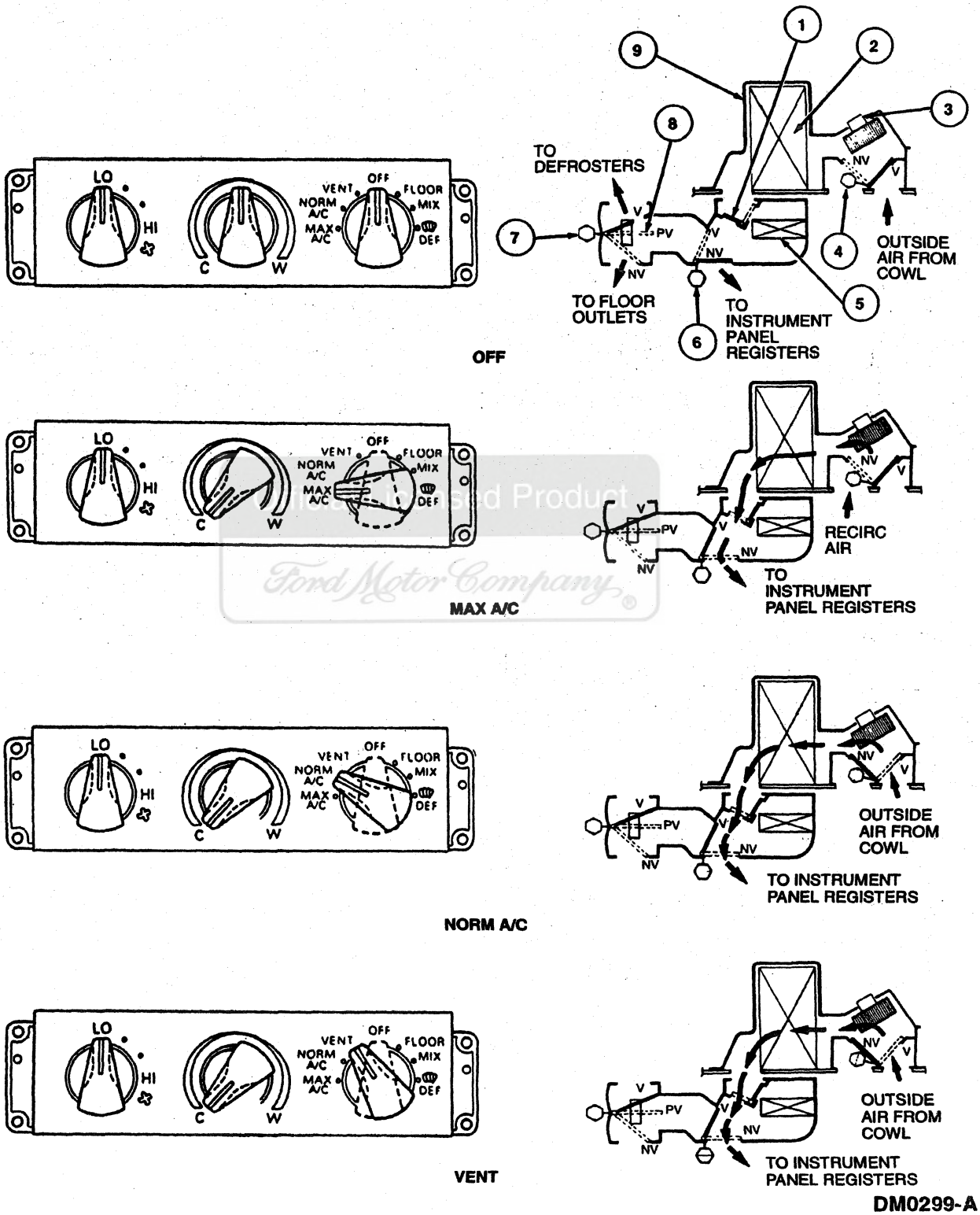

Unauthorized Product
Ford Motor Company

DESCRIPTION AND OPERATION (Continued)

Item	Part Number	Description
1	—	Blend Air Door (Part of 18471)
2	19860	A/C Evaporator Core
3	18527	Blower Motor
4	18A318	Vacuum Control Motor (to Outside Air Door)

(Continued)

Item	Part Number	Description
5	18476	Heater Core
6	18A318	Vacuum Control Motor (to Panel Door)
7	18A318	Vacuum Control Motor
8	—	To RH and LH Demisters (Part of 19E630)
9	19850	A/C Evaporator Housing

Official Licensed Product
Ford Motor Company

DESCRIPTION AND OPERATION (Continued)

Airflow Diagram (Continued)

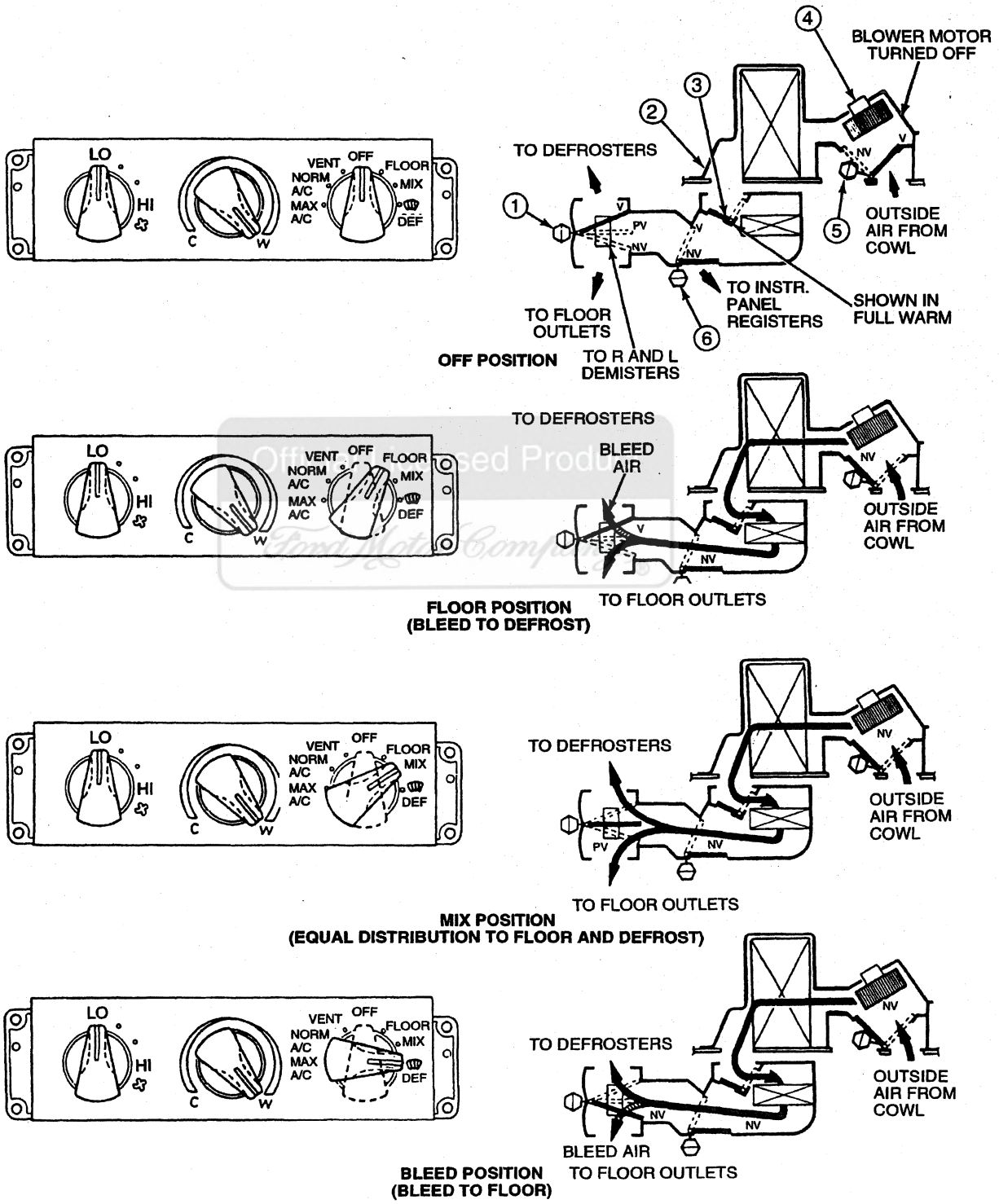

DESCRIPTION AND OPERATION (Continued)

Item	Part Number	Description
1	18A318	Vacuum Control Motor
2	19850	A/C Evaporator Housing
3	—	Temperature Blend Door (Part of 18471)

(Continued)

Item	Part Number	Description
4	18527	Blower Motor
5	18A318	Vacuum Control Motor (to Air/Recirc. Air Door)
6	18A318	Vacuum Control Motor (to Panel/Defrost Door)

OFF

In the OFF position, all doors are in the vacuum-applied position with the exception of the PANEL door.

MAX A/C

In the MAX A/C position, all vacuum operated doors are in the vacuum position. A/C damper inlet door (19C802) air is shut off and the passenger compartment air is recirculated to maximize cooling. Discharge is through panel register. A/C clutch (2884) is energized.

NORM A/C

In the NORM A/C position, outside air is allowed to enter the passenger compartment. The air passes through the A/C evaporator core (19860) and is cooled before reaching the passenger compartment. Discharge is through panel register. A/C clutch is energized.

VENT

Ventilation is delivered through the instrument panel registers when the function selector knob in the A/C control (19980) is set in the VENT position. In the VENT position, no vacuum is applied to the outside/recirc. vacuum control motor (18A318) and the door is open to the outside. The air coming in through the cowl is discharged through the panel registers.

The panel/floor, floor/defrost and outside recirc. doors are vacuum operated.

For maximum cooling, the temperature knob should be set in its fully counterclockwise position; the function knob should be in the MAX A/C position; and the blower motor (18527) should be set for a desired rate of airflow.

Even though the function knob is on MAX A/C, the temperature knob, being manually controlled, may be set to modify the temperature of the air and the path through which the air flows. Another characteristic of the MAX A/C setting is the increased noise level of the blower motor. Speed does not change when the outside/recirc. door is moved to either of its two positions. The difference in noise level is that an open recirculation door (i.e., when in MAX A/C) exposes the passenger compartment directly to the noise. When the recirculation door is closed, the noise level decreases.

The control knob operates an A/C switch that is attached to the backside of the A/C control by one screw and retainer tabs.

Climate Control

FRONT VIEW

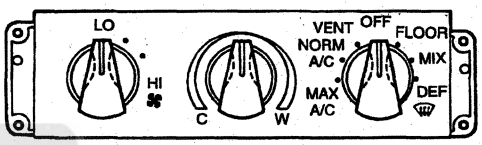

BACK VIEW

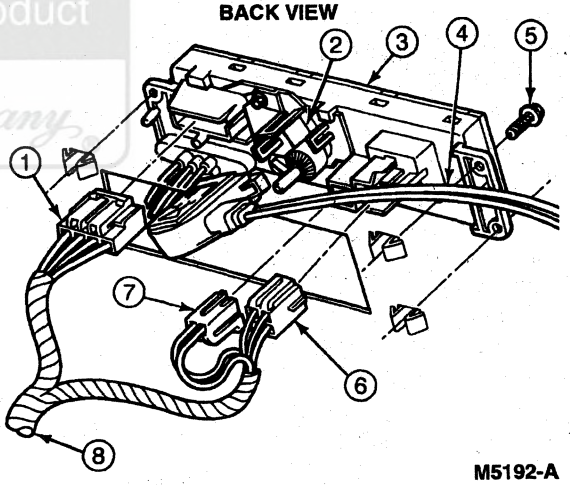

M5192-A

Item	Part Number	Description
1	14401	Main Wiring (to Function Selector Switch)
2	19D816	A/C Temperature Control Bracket
3	19980	A/C Control
4	19988	A/C Temperature Cable
5	N803877-S36B	Screw (4 Req'd)
6	14401	Main Wiring (to A/C Blower Switch)
7	14401	Main Wiring (to A/C Illumination)
8	14401	Main Wiring

Official Licensed Product

DESCRIPTION AND OPERATION (Continued)

Five hoses (black, white, red, blue, yellow) extend from the A/C control just below the electrical connector for the mode selector switch to the vacuum control motors and vacuum supply. The solid black hose goes to the vacuum supply through a tee-shaped A/C vacuum check valve (19A563), which attaches the A/C vacuum reservoir tank and bracket (19A566) and engine source. The white hose actuates the outside/recirc. air door two-position vacuum control motor. The blue hose actuates the floor/panel air door two-position vacuum control motor. The red and yellow hoses actuate the floor/defrost three-position air vacuum control motor. Each end of each hose slides onto the nipple of the vacuum port to which it attaches.

FLOOR

In the FLOOR position, no vacuum is applied to the PANEL/DEFROST vacuum control motor, vacuum is applied to both sides of the FLOOR/DEFROST vacuum control motor and the outside/recirc. door is open to the outside. Air is discharged through the heater outlet floor ducts (18C433) with a small amount going to the windshield defroster hose nozzles (18490).

MIX

In the MIX position, outside air is discharged through the windshield defroster hose nozzles and the heater outlet floor ducts.

DEFROST

In the DEFROST position, outside air is discharged through the windshield defroster hose nozzles with a small amount going to the heater outlet floor ducts. All doors are in the no vacuum position. A/C clutch is engaged in ambient temperatures above approximately 10°C (50°F).

Refrigerant System

The following illustration shows a basic refrigerant circuit representing refrigerant changes as it passes through a cycle from compressor output to compressor input.

The illustration identifies four states in which refrigerant will exist in a closed circuit: (1) high-pressure liquid, (2) restriction, (3) low-pressure liquid and (4) low-pressure vapor. Beginning with compressor output, refrigerant moves as a high-pressure gas (7) to the A/C condenser core (19712). As it passes through the A/C condenser core, (7) the vapor condenses into a liquid.

In the course of this condensation process, the refrigerant gives up heat. This heat exchange does not alter the temperature of the refrigerant. Thus, the refrigerant continues its flow through the circuit as a high-temperature, high-pressure liquid.

The restriction called out in the illustration is an A/C evaporator core orifice (19D990) which contains a 1.575-mm (0.062-inch) orifice. (This tube is color-coded red.) When the refrigerant passes through this A/C evaporator core orifice, it changes from a high- to low-pressure liquid, with a corresponding drop in temperature.

The refrigerant, upon leaving the A/C evaporator core orifice, is drawn through the circuit by compressor suction. Thus, it enters the A/C evaporator core (19860) as a low-pressure/low-temperature liquid.

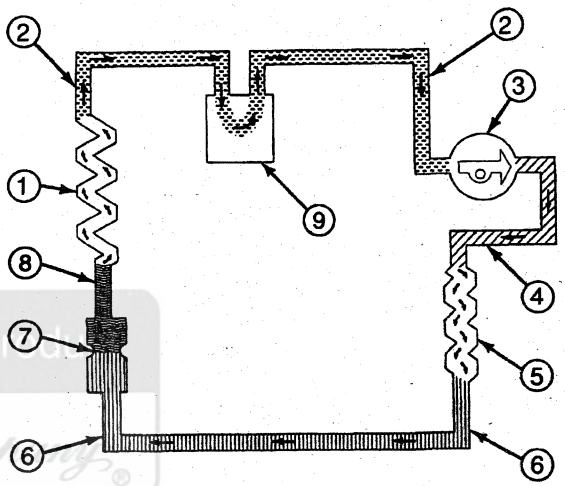

REFRIGERANT FLOW M4001-E

Item	Part Number	Description
1	19860	A/C Evaporator Core (Low-Pressure Liquid In, High-Pressure Vapor Out)
2	19867	Evaporator to Compressor Suction Line (Low-Pressure Vapor)
3	19703	A/C Compressor (Low-Pressure Vapor In, High-Pressure Vapor Out)
4	19972	A/C Compressor to Condenser Discharge Line (High-Pressure Vapor)
5	19712	A/C Condenser Core (High-Pressure Vapor In, High-Pressure Liquid Out)
6	19835	Condenser to Evaporator Tube (High-Pressure Liquid)
7	19D990	A/C Evaporator Core Orifice (Restriction)
8	—	Evaporator Inlet (Low-Pressure Liquid) (Part of 19860)
9	19C836	Suction Accumulator/Drier (Low-Pressure Vapor)

Official Licensed Product Ford Motor Company

DESCRIPTION AND OPERATION (Continued)

The cooling of the A/C evaporator core creates a temperature differential between the A/C evaporator core and the ambient air in the A/C evaporator housing (19850). As a result of this difference, heat is absorbed from the air. Simultaneously, humidity is extracted from the air and drained onto the road surface under the vehicle. Again, the absorption of BTUs does not affect refrigerant temperature.

Refrigerant flow, after leaving the A/C evaporator core, continues through the suction accumulator/drier (19C836) where any moisture within the refrigerant system is absorbed into a desiccant bag and the more heavily oil-laden refrigerant is returned to the A/C compressor (19703) through a small bleed, liquid bleed hole, near the bottom of the aspirator tube.

The cooled, dehumidified air in the A/C evaporator case (19897) is pushed by the blower motor (18527) through the heater air plenum chamber (18471) and out through ducting to the registers in the instrument panel (04320).

Extending this basic coverage of a refrigerant circuit, the following traces refrigerant flow through actual circuit components.

When the air conditioning system is not on, refrigerant system pressures are equalized on both the high and low sides of the refrigerant system. In a system that is fully charged (saturated) and not operating, refrigerant will exist in both liquid and vapor phases.

When the function selector knob (18519) is set on A/C (MAX or NORM), MIX or DEFROST, the A/C clutch field coil (2987) is energized and the clutch plate is pulled into contact with the clutch pulley. The clutch plate and hub assembly then rotates the compressor shaft.

When the compressor shaft is rotated, the double ended pistons move backward and forward in their respective cylinder bores. As each piston is moved backward in its cylinder bore, it pulls the low pressure gas past the suction reed into the cylinder.

As each piston is forced into its respective cylinder bore, the refrigerant vapors from the suction side of the refrigerant system are compressed into a decreasingly smaller area, thus increasing the refrigerant vapor pressure and also raising the refrigerant vapor temperature. The higher refrigerant vapor pressure now assists in sealing the suction reed valve closed and also opens the discharge (high pressure) reed valve as the cylinder pressure exceeds the high-pressure side of the refrigerant system. When the compressed higher pressure and temperature refrigerant vapor is discharged into the high-pressure side of the refrigerant system, the discharge reed valve spring pressure and the high side refrigerant pressure closes and seals the reed valve, thus preventing the discharge pressure from re-entering the compressor cylinder. The compressor's refrigerant vapor compression cycle begins again as the pistons are again pulled from their respective compressor cylinder bores by the rotating compressor shaft.

The high-pressure and high-temperature compressor discharge refrigerant vapor is released into the top of the A/C condenser core, via the A/C manifold and tube (19D734). The A/C condenser core, being close to ambient temperature, causes the refrigerant vapor to condense into a liquid when heat is removed from the refrigerant vapor by ambient air passing over the fins and tubing.

Liquid refrigerant from the outlet enters the high pressure condenser to evaporator tube (19835) and then the inlet side of the A/C evaporator core orifice located in the inlet tube. The inlet filter screen of the A/C evaporator core orifice removes coarse contaminant particulates, which may be present in the liquid refrigerant, before the liquid refrigerant enters the calibrated opening of the A/C evaporator core orifice. The outlet end of the A/C evaporator core orifice has a fine mesh filter with four open side slots in the body of the A/C evaporator core orifice, upstream from the filter. This filter is used to reduce noise. The side slots and filter act as a refrigerant flow noise suppressor.

The liquid refrigerant passes through the A/C evaporator core orifice and enters the A/C evaporator core as a low-pressure cold liquid. As airflow passes over the plate-fin sections of the A/C evaporator core, the refrigerant inside absorbs the heat and changes into a vapor.

A/C compressor suction draws the vaporized refrigerant and oil mixture into the suction accumulator/drier where the heavier, oil-laden vapors fall to the bottom and the lighter vapors and oil mixture continue their path to the A/C compressor via the top of the vapor return tube. A desiccant bag, located inside the suction accumulator/drier, absorbs and retains moisture that may be circulating in the refrigerant system. The heavier, oil-laden refrigerant also returns to the A/C compressor through a small liquid bleed hole near the bottom of the vapor return tube. The liquid bleed hole provides a controlled second opportunity for the accumulated refrigerant and oil mixture to revaporize as it passes through the opening to re-enter into the main vapor flow path to the suction side of the A/C compressor.

The manual air conditioning/heater refrigerant system uses a ten-cylinder swash plate A/C compressor, an A/C condenser core, an A/C evaporator core with an A/C evaporator core orifice in the inlet tube, a suction accumulator/drier with an integral drier, an A/C cycling switch (19E561), specially designed quick-release type service access gauge port valves, and the necessary refrigerant lines.

DESCRIPTION AND OPERATION (Continued)

Service Access Gauge Port Valves

NOTE: The A/C service port fittings used in R-134a refrigerant systems are a two-piece design. The top portion of the fitting is aluminum and is threaded to the bottom part and sealed with an O-ring seal. These fittings can be serviced through the use of either the High Side A/C Fitting Socket D94L-19703-A or the Low Side A/C Fitting Socket D94L-19703-B providing the system is first discharged. Refer to Section 12-00 for discharging procedures. The valve seal is an integral part of the aluminum fitting piece which must be replaced if the seal leaks. The Schrader valve core used on R-12 systems is not used in the R-134a system.

The high-side fitting is the largest and special adapters are required to attach service equipment to both the high- and low-side system ports.

- Rotunda R-134a High-Side Quick Disconnect 176-R0037 or equivalent.
- Rotunda R-134a Low-Side Quick Disconnect 176-R0036 or equivalent.
- Rotunda R-134a Manifold Gauge Set 176-R032A or equivalent.

Always reinstall the A/C charging valve caps (19D702) on the service access gauge port valves after servicing the A/C system to prevent dirt from entering the valve or refrigerant system.

High-Side Service Port

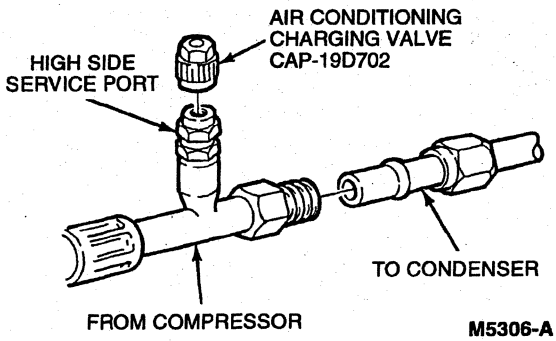

A/C Evaporator Core

The A/C evaporator core is a plate-fin core similar to passenger car cores. The condenser to evaporator tube connects to the bottom of the A/C evaporator core and the suction accumulator/drier assembly connects to the top of the A/C evaporator core.

A/C Evaporator Core Orifice

The inlet tube to the A/C evaporator core is fitted with an A/C evaporator core orifice to control refrigerant flow. This A/C evaporator core orifice can be removed from the inlet tube and A/C evaporator core for replacement if it becomes necessary. However, Fixed Orifice Tube Tool D80L-19990-A or equivalent is necessary to prevent breakage when removing the A/C evaporator core orifice.

The A/C evaporator core orifice is a restriction between the high and low pressure refrigerant and meters the flow of liquid refrigerant into the A/C evaporator core. The diameter of the orifice within the A/C evaporator core orifice is 1.575 mm (0.062 inch). The A/C evaporator core orifice can be identified by the red body color and white outlet tip.

The A/C evaporator core orifice is located in the evaporator core inlet tube and has filter screens on the inlet and outlet ends of the body. The filter screens act as strainers for the liquid refrigerant flowing through the opening. O-rings on the A/C evaporator core orifice prevent the high pressure liquid refrigerant from bypassing the A/C evaporator core orifice. Adjustment or repairs cannot be made to the A/C evaporator core orifice and it must be replaced as a unit.

Suction Accumulator/Drier

The suction accumulator/drier is mounted to the front side of the A/C evaporator case and attaches directly to the outlet tube.

Refrigerant enters the accumulator/drier canister through the inlet tube and the heavier, oil-laden refrigerant falls to the bottom of the canister. A small diameter aspirator tube is located close to the bottom of the canister. This aspirator tube is covered with a filter screen and allows a small amount of the heavier liquid refrigerant and oil mixture to re-enter the A/C manifold and tube at a controlled rate. When the heavier liquid refrigerant and oil mixture enters the compressor evaporator to compressor suction line (19867), it has a second opportunity to vaporize and circulate through the A/C compressor without causing damage to the A/C compressor due to refrigerant slugging.

A desiccant bag is mounted inside the suction accumulator/drier canister to absorb any moisture in the refrigerant system.

A fitting located on the side of the canister is used to attach the A/C cycling switch. A long-travel Schrader valve stem core is installed in the fitting opening to prevent refrigerant loss when the A/C cycling switch is removed.

Replacement of the suction accumulator/drier is necessary any time a major component of the refrigerant system is replaced. A major component includes A/C condenser core, A/C compressor, A/C evaporator core or a refrigerant hose/line. An A/C evaporator core orifice or O-ring is not considered a major component but the A/C evaporator core orifice should be replaced whenever the A/C compressor is replaced for lack of performance.

In addition to the preceding condition, the suction accumulator/drier should also be replaced if one of the following conditions exists:

- The suction accumulator/drier is perforated.
- The refrigerant system has been opened to the atmosphere for a period of time longer than required to make a minor repair.

DESCRIPTION AND OPERATION (Continued)

- NOTE: The compressor oil may have a dark color while maintaining a normal oil viscosity. This is normal for this A/C compressor because carbon from the compressor piston rings may discolor the oil.

  There is evidence of moisture in the system, such as internal corrosion of metal refrigerant lines, or the refrigerant oil is thick and dark.

When replacing the suction accumulator/drier, the procedure given here must be followed to ensure the total oil charge in the system is correct after the new accumulator/drier is installed.

1. Drain the oil from the removed suction accumulator/drier into a suitable measuring container. It will be necessary to drill one or two 1/2-inch holes in the bottom of the old suction accumulator/drier, or remove the bottom to make sure that all the oil has drained out.
2. Add the same amount of clean new refrigerant oil plus 59 ml (2 oz.) to the suction accumulator/drier. Use only the oil specified for the specific vehicle being serviced.

A/C Cycling Switch

The A/C cycling switch is mounted on a Schrader valve fitting on the side of the suction accumulator/drier assembly. A valve depressor, located inside the threaded end of the A/C cycling switch, presses in on the Schrader valve stem as the A/C cycling switch is mounted and allows the suction pressure inside the suction accumulator/drier housing to activate the A/C cycling switch. The electrical contacts will open when the suction pressure drops to 163-175 kPa (23.5-25.5 psi). They will close, activating the A/C clutch (2884), when the suction pressure rises to 276-324 kPa (40-47 psi). Lower ambient temperatures (below approximately 1°C (30°F) during cold weather seasons will also prevent A/C compressor operation, because of the pressure/temperature relationship of the refrigerant in the system.

NOTE: Temperature must drop to -4°C (25°F) to open pressure switch contacts. Contacts open at approximately -4°C (25°F) decreasing and close increasing 7.2-10°C (45-50°F).

The electrical contacts control the electrical circuit to the A/C clutch field coil. When the contacts are closed, the A/C clutch field coil is energized and the A/C clutch is engaged to drive the A/C compressor. When the contacts are open, the A/C clutch field coil is de-energized, the A/C clutch is disengaged and the A/C compressor does not operate. The A/C cycling switch, when functioning properly, will control the pressure at a point where the plate-fin surface temperature of the A/C evaporator core will be maintained slightly above freezing, which prevents icing and the blockage of airflow.

A/C Condenser Core

The A/C condenser core is attached to the radiator support in front of the radiator (8005) with two mounting brackets at the top and bottom of the A/C condenser core. The top mounting brackets attach to the rear side of the radiator support and the lower brackets attach to the front side of the radiator support.

Ford Licensed Product

DESCRIPTION AND OPERATION (Continued)

A/C Condenser Core Installation

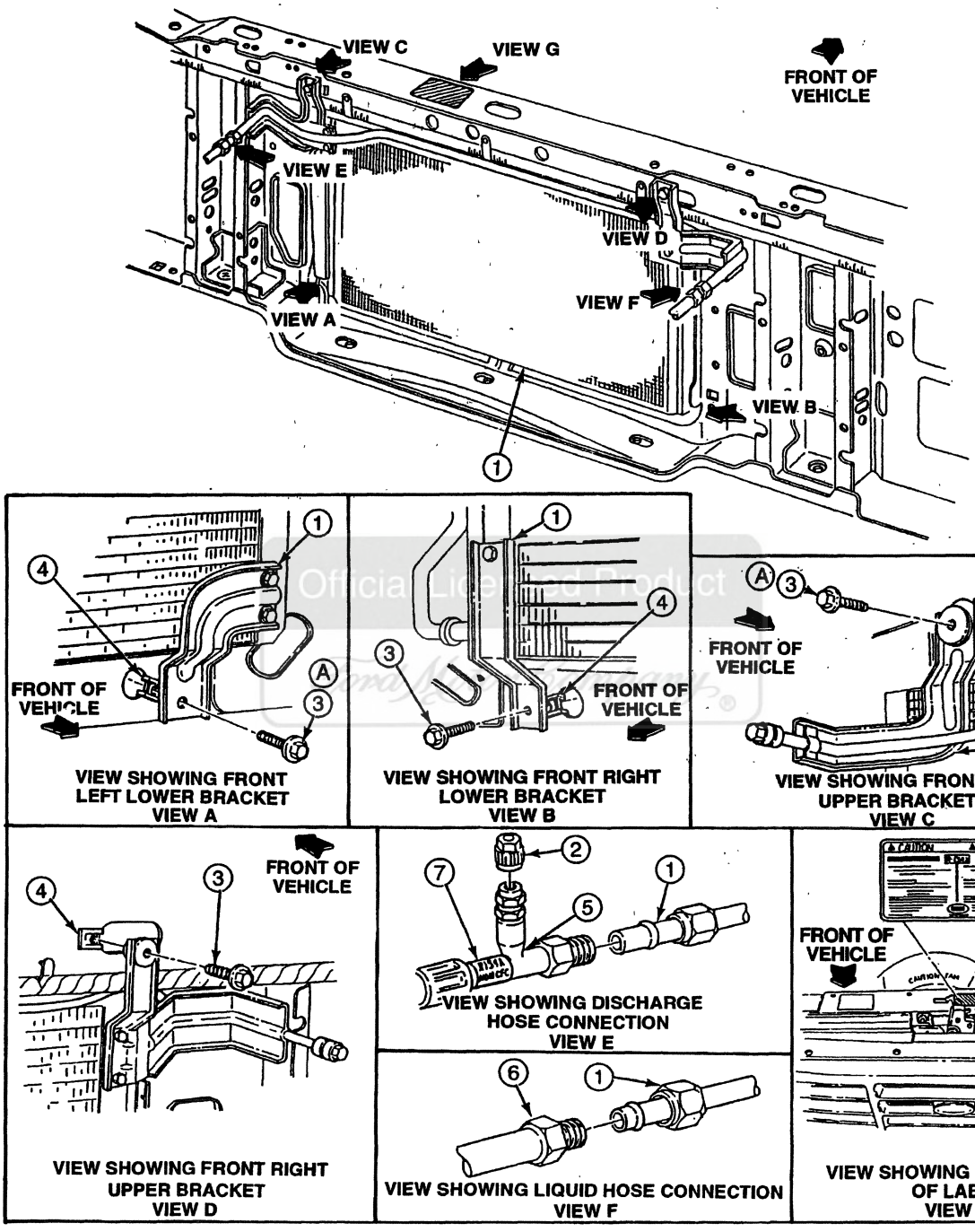

M5407-A

Item	Part Number	Description
1	19712	A/C Condenser Core
2	19D702	A/C Charging Valve Cap
3	N606691-S2	Screw and Washer (4 Req'd Gas, 2 Req'd Diesel)

(Continued)

Item	Part Number	Description
4	N623333-S100	U-Nut (4 Req'd)
5	19D734	A/C Manifold and Tube
6	19835	Condenser to Evaporator Tube

(Continued)

DESCRIPTION AND OPERATION (Continued)

Item	Part Number	Description
7	—	Refrigerant Identification Tag (Part of 19D734)

(Continued)

Item	Part Number	Description
8	19A688	Refrigerant Charge Information Tag
A	—	Tighten to 14-19 N·m (11-14 Lb-Ft)

A/C Compressor

The FS-10 A/C compressor is a 10-cylinder swash-plate type and is installed on the left side of the engine compartment. It is driven by the front end accessory drive belt (8620). Tension adjustment is obtained by means of an automatic tensioner.

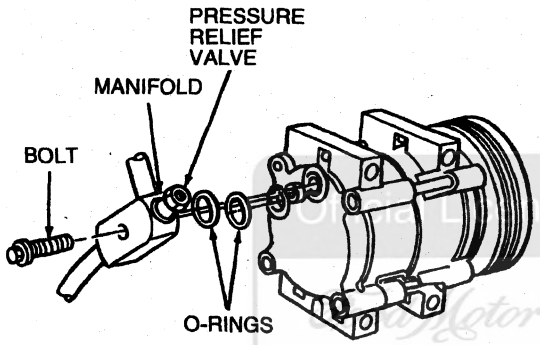

M4132-A

Spring Lock Coupling

The spring lock coupling found on some fittings in the A/C system is a refrigerant line coupling held together by a garter spring inside a circular cage. When the coupling is connected, the flared end of the female fitting slips behind the garter spring inside the circular cage of the male fitting. The garter spring and circular cage then prevent the flared end of the female fitting from pulling out of the cage. Two O-ring seals are used to seal the two halves of the coupling. These O-ring seals are made of a special material and must be replaced with an O-ring seal of the same material. These O-ring seals can be identified by a green color. These special green O-ring seals are designed for use in R-134a refrigerant systems. Use only the O-ring seals specified in the Ford Master Parts Catalog for the spring lock coupling. The O-ring seals must be replaced each time the spring lock coupling is disconnected and reconnected for servicing or replacement purposes.

A plastic indicator ring is used on spring lock couplings to indicate, during vehicle assembly, that the coupling is connected. Once the coupling is connected, the indicator ring is no longer necessary but remains captive on the refrigerant line, near the spring lock coupling. The indicator ring may also be used for servicing purposes to indicate coupling connection. After the coupling has been cleaned, new green O-rings should be lubricated with clean refrigerant oil and installed. Insert the tabs of the indicator ring into the circular cage opening. Then connect the coupling together by pushing with a slight twisting motion. When the coupling is connected, the indicator ring will pop out of the circular cage indicating connection. Once the spring lock coupling is connected, an A/C tube lock coupling clip (19E746) is placed over the connection to act as a secondary retention holding device.

Spring Lock Coupling

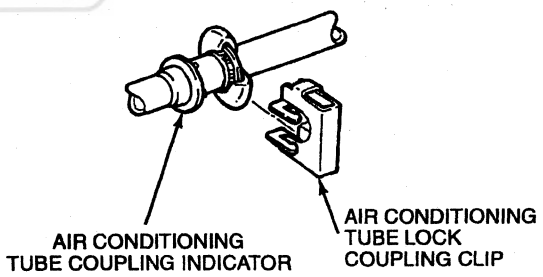

M5307-A

A/C Compressor Pressure Relief Valve

An A/C compressor pressure relief valve (19D644) is installed on the A/C manifold and tube to relieve excess high-pressure buildups (3172 kPa or 460 psi and above) and prevent damage to the A/C compressor and other air conditioner components.

A/C Pressure Cut-Off Switch

Single

An A/C pressure cut-off switch (19D594) is used on all vehicles with air conditioning to interrupt A/C compressor operation in the event of high system discharge pressures, which could result in a loss of refrigerant.

DESCRIPTION AND OPERATION (Continued)

The A/C pressure cut-off switch is a single-function refrigerant switch. It controls compressor clutch operation. This switch cycles as follows:

- Clutch out at 2965-3241 kPa (430-470 psi) increasing pressure.
- Clutch in at 1586-2000 kPa (230-290 psi) decreasing pressure.

The A/C pressure cut-off switch is located in the discharge line between the A/C compressor (19703) and the A/C condenser core (19712).

DIAGNOSIS AND TESTING

Electrical Schematic Reference(s)

Refer to Electrical and Vacuum Troubleshooting Manual, Cell 54, Air Conditioner/Heater for schematic and connector information.

Air Conditioning System, Manual A/C-Heater

Inspection and Verification

1. Verify the vehicle owner's original concern by operating the climate control system to duplicate the concern.
2. Inspect to determine if one of the following mechanical concerns apply.

VISUAL INSPECTION CHART

Mechanical
• Check all refrigerant line connections for indications of leaks. • Check drive belts for evidence of age and wear. • Check engine coolant hoses for evidence of age.

3. If the concern(s) remain after the inspection, determine the symptom(s) and proceed to the following symptom chart.

Official Licensed Product
Ford Motor Company

Symptom Chart

CLIMATE CONTROL SYSTEM

Condition	Possible Source	Action
• Improper Airflow from Outlets	• No vacuum to A/C-heater function selector switch. • A/C-heater function selector switch leaks. • Damaged/kinked/pinched vacuum hose(s). • Leaking/damaged vacuum control motor. • Leaking/damaged vacuum check valve. • Leaking/damaged vacuum reservoir. • Vacuum actuator arm not connected to door crank.	• GO to Pinpoint Test A.
• Heater Does Not Change Temperature	• Damaged/inoperative A/C electronic door actuator motor. • Damaged/inoperative temperature control switch. • Circuitry open/shorted.	• GO to Pinpoint Test B.

DIAGNOSIS AND TESTING (Continued)

Pinpoint Test

Vacuum Leak Diagnosis

The air handling system is designed to provide defrost when no vacuum is applied to any of the three air door vacuum control motors (18A318). This is done to prevent a situation where defrost cannot be obtained due to a system vacuum leak. Instead, a leak in the vacuum control circuit will send all airflow to the defroster outlets. This condition may occur during acceleration (small leak), may exist at all times (large leak) and may happen only when certain specific functions are selected, indicating a leak in that portion of the circuit.

The vacuum hoses used in the passenger compartment control circuit are constructed of polyvinyl-chloride (PVC) plastic material. The vacuum hoses used in the engine compartment are constructed of Hytrel. Because of the materials used, the vacuum hoses should never be pinched off during diagnosis to locate a leak. Use Rotunda Vacuum Leak Tester 014-R1054 or equivalent to locate vacuum leaks. A wood golf tee can be used as a plug when it is necessary to plug one end of a vacuum hose for leak test purposes.

PINPOINT TEST A: IMPROPER AIRFLOW FROM OUTLETS

Test Step		Result	Action to Take
A1	CHECK SYSTEM AIRFLOW		
	• Start engine and place heater blower motor switch in HIGH position. • Check system airflow in each function selector setting to determine which position(s) have incorrect airflow. • **Is airflow from the defroster outlets for all function selector settings?**	Yes ▶ No ▶	GO to **A2**. GO to **A13**.
A2	CHECK VACUUM SUPPLY HOSE		
	• Check vacuum supply hose to be sure it is connected to both the engine manifold and the A/C vacuum check valve. • **Is hose disconnected?**	Yes ▶ No ▶	RECONNECT hose. RETEST system. GO to **A3**.
A3	CHECK VACUUM SUPPLY HOSE FOR LEAKS		
	• Disconnect vacuum supply hose from engine manifold fitting and from A/C vacuum check valve. • Plug one end of hose and leak test with vacuum tester. • **Does hose leak?**	Yes ▶ No ▶	SERVICE or REPLACE as necessary. RETEST system. CONNECT hose to manifold fitting. GO to **A4**.
A4	TEST VACUUM CHECK VALVE		
	• Test A/C vacuum check valve for correct installation by removing the reservoir hose and the control assembly source hose (one at a time) from the A/C vacuum check valve and check for vacuum. Engine must be running for this test. **VACUUM HOSE FROM ENGINE CONNECTED TO THIS FITTING** 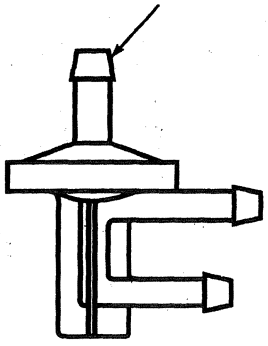 M4800-A • **Is vacuum available at both check valve ports?**	Yes ▶ No ▶	RECONNECT both hoses. GO to **A6**. GO to **A5**.

Ford Licensed Product Ford Motor Company

DIAGNOSIS AND TESTING (Continued)

PINPOINT TEST A: IMPROPER AIRFLOW FROM OUTLETS (Continued)

Test Step		Result ▶	Action to Take
A5	INSPECT VACUUM CHECK VALVE		
	• Inspect A/C vacuum check valve for an obstruction and/or proper operation. Airflow through the A/C vacuum check valve should be in the direction toward engine (engine connection side is marked VAC). • **Is A/C vacuum check valve plugged or obstructed?**	Yes ▶ No ▶	REPLACE A/C vacuum check valve. RETEST system. GO to **A6**.
A6	LEAK TEST VACUUM CHECK VALVE		
	• Remove A/C vacuum check valve from vehicle. • Connect two hoses and a tee-fitting to outlet ports of A/C vacuum check valve. • Connect vacuum tester to tee-fitting. 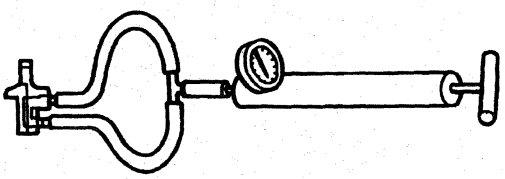 **M5001-A** • Pump 50.5 kPa (15 inches) vacuum on the A/C vacuum check valve and observe vacuum tester gauge reading. If vacuum loss exceeds 3 kPa (1 inch) per minute, remove A/C vacuum check valve from tester and plug vacuum hoses. Pull a vacuum with the tester to be certain hoses and tester are not cause of leak. 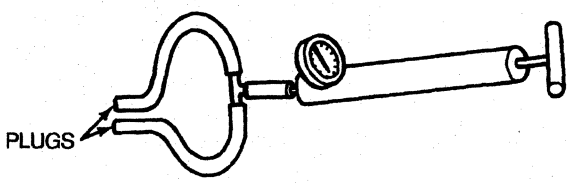 **M5002-A** • If tester and hoses do not leak, A/C vacuum check valve is cause of problem. • **Does A/C vacuum check valve lose more than 3 kPa (1 inch) vacuum in one minute?**	Yes ▶ No ▶	REPLACE A/C vacuum check valve. RETEST system. REINSTALL A/C vacuum check valve. GO to **A7**.
A7	CHECK VACUUM RESERVOIR		
	• Connect vacuum tester to A/C vacuum reservoir tank and bracket. • Pull a vacuum on the reservoir and observe gauge reading. Reservoir must hold a vacuum. • **Does A/C vacuum reservoir tank and bracket leak?**	Yes ▶ No ▶	REPLACE A/C vacuum reservoir tank and bracket. RETEST system. CONNECT hose to A/C vacuum reservoir tank and bracket. GO to **A8**.
A8	CHECK SUPPLY HOSE FOR LEAK		
	• Disconnect and plug black supply hose at A/C control. • Disconnect other end of supply hose from A/C vacuum check valve and leak test hose with vacuum tester. • **Does supply hose leak?**	Yes ▶ No ▶	SERVICE or REPLACE hose as necessary. RETEST system. REMOVE plug and RECONNECT vacuum hose. GO to **A9**.

DIAGNOSIS AND TESTING (Continued)

PINPOINT TEST A: IMPROPER AIRFLOW FROM OUTLETS (Continued)

Test Step		Result ▶	Action to Take
A9	CHECK CONTROL ASSEMBLY		
	• Disconnect A/C plenum vacuum harness at in-line multiple connector near A/C control. • Plug all vacuum hoses except black. • Connect vacuum tester to black hose. • Select each function position, apply 50.5 kPa (15 inches) vacuum and check for vacuum drop. Vacuum drop should not exceed 3 kPa (1 inch) vacuum per minute for any function position. • **Does vacuum drop exceed 3 kPa (1 inch) vacuum per minute?**	Yes ▶ No ▶	NOTE function position(s) where vacuum drop occurs. GO to **A10**. GO to **A11**.
A10	LEAK TEST CONTROL ASSEMBLY		
	• Remove A/C plenum vacuum harness from A/C control. • Connect vacuum tester to control assembly supply port which indicated a leak in Step A9. • Select function position(s) noted in Step A9 and apply 50.5 kPa (15 inches) vacuum after selecting each function position. Vacuum drop should not exceed 2 kPa (1/2 inch) per minute. • **Does vacuum drop exceed 2 kPa (1/2 inch) in one minute?**	Yes ▶ No ▶	REPLACE function control switch. RETEST system. GO to **A12**.
A11	CHECK SUPPLY HOSE		
	• Disconnect black supply hose from A/C vacuum check valve. • Connect vacuum tester to supply hose and operate tester as if pulling a vacuum. If tester can pull a vacuum, hose is plugged. If tester pulls a partial vacuum, hose is restricted. • **Is hose plugged or restricted?**	Yes ▶ No ▶	REPLACE supply hose. RETEST system. GO to **A15**.
A12	LEAK TEST JUMPER HARNESS		
	• Plug one end of vacuum hose that indicated a leak in Step A9. • Apply 50.5 kPa (15 inches) vacuum to hose and observe vacuum gauge reading. Vacuum should not drop. • **Does vacuum drop?**	Yes ▶ No ▶	SERVICE or REPLACE vacuum jumper harness as necessary. RETEST system. CHECK connection of vacuum harness to A/C control for leak. SERVICE as necessary. RETEST system.
A13	EVALUATE SYSTEM		
	• Repeat Step A1. • **Is airflow in Step A1 correct for each function position?**	Yes ▶ No ▶	GO to **A14**. GO to **A15**.
A14	ISOLATE LEAKING VACUUM CIRCUIT		
	• Repeat Step A1 and accelerate engine speed for each function position. • **Does airflow go to defrost during acceleration?**	Yes ▶ No ▶	GO to **A19**. GO to **A15**.
A15	REVIEW VEHICLE HISTORY		
	• Check vehicle service records for past service reports. • **Did system function properly prior to this complaint?**	Yes ▶ No ▶	GO to **A18**. GO to **A16**.
A16	CHECK VACUUM HOSES		
	• Check each vacuum hose to be sure it is not plugged. • **Is hose plugged?**	Yes ▶ No ▶	SERVICE or REPLACE as necessary. RETEST system. GO to **A17**.
A17	CHECK VACUUM HARNESS		
	• Make sure all vacuum hoses are correctly color coded. • **Are the vacuum hoses correctly color coded?**	Yes ▶ No ▶	GO to **A18**. REPLACE vacuum harness.

Official Licensed Product Motor Company

DIAGNOSIS AND TESTING (Continued)

PINPOINT TEST A: IMPROPER AIRFLOW FROM OUTLETS (Continued)

Test Step		Result ▶	Action to Take
A18	CHECK VACUUM CIRCUIT		
	• Check vacuum circuit for pinched or kinked vacuum hose(s). • **Is a hose pinched or kinked?**	Yes ▶ No ▶	SERVICE or REPLACE as necessary. RETEST system. GO to **A19**.
A19	CHECK VACUUM CIRCUIT CONNECTION		
	• Check each vacuum hose connection to determine if it is partially connected or disconnected. • **Is a vacuum hose connection disconnected or partially connected?**	Yes ▶ No ▶	RECONNECT hose. RETEST system. GO to **A20**.
A20	CHECK VACUUM HOSE		
	• Disconnect both ends of vacuum hose in suspected circuit. • Plug one end and leak test with vacuum tester. • **Does vacuum hose leak?**	Yes ▶ No ▶	SERVICE or REPLACE as necessary. RETEST system. GO to **A21**.
A21	CHECK VACUUM CONTROL MOTOR		
	• Check vacuum control motor for leaks with vacuum tester. • **Does vacuum control motor hold vacuum?**	Yes ▶ No ▶	GO to **A22**. REPLACE vacuum control motor. RETEST system.
A22	CHECK VACUUM CONTROL MOTOR INSTALLATION		
	• Check attachment of vacuum control motor to damper door. • **Is motor arm attached to door or door crank arm?**	Yes ▶ No ▶	CHECK for binding or damaged damper door. SERVICE as necessary. RETEST system. CONNECT vacuum control motor arm to door and/or crank arm and CHECK operation. RETEST system.

Official Licensed Product
Ford Motor Company

PINPOINT TEST B: HEATER DOES NOT CHANGE TEMPERATURE

Test Step		Result ▶	Action to Take
B1	CHECK COOLANT LEVEL		
	• **CAUTION: Engine should be fully cool before removing radiator cap. If the engine and cooling system are not fully cool, use extreme caution when removing radiator cap. Excess pressure within the radiator can result in hot coolant and steam escaping from the radiator with enough force to injure or scald persons standing near the vehicle when the radiator cap is removed. Use a shop towel around the radiator cap when opening the radiator cap. Turn the radiator cap only to the first release point. Step back and allow system pressure to release before fully opening the radiator. When system pressure has been completely released, remove radiator cap with shop towel still wrapped around the radiator cap.** • Remove radiator cap and check coolant level. • **Is coolant level in the radiator low?**	Yes ▶ No ▶	REFILL radiator with coolant to proper level. RETEST system. GO to **B2**.
B2	CHECK THERMOSTAT		
	• Start engine and allow to run at least 10 minutes. • Carefully open radiator cap and observe coolant for evidence of circulation. Slightly increase engine idle speed if necessary. • **Does coolant show evidence of circulation?**	Yes ▶ No ▶	GO to **B3**. REPLACE thermostat. RETEST system.
B3	CHECK HEATER HOSES		
	• Check heater water hoses for kinks. • Check that heater water hoses are not crossed. • **Are heater water hoses kinked or incorrectly routed?**	Yes ▶ No ▶	SERVICE or REPLACE as necessary. RETEST system. GO to **B4**.

DIAGNOSIS AND TESTING (Continued)

PINPOINT TEST B: HEATER DOES NOT CHANGE TEMPERATURE (Continued)

Test Step		Result ▶	Action to Take
B4	CHECK FOR HEATING SYSTEM BLOCKAGES		
	• Start engine and allow to reach normal operating temperature. • Feel heater water hoses. • **Do both heater water hoses become too hot to hold?**	Yes ▶	GO to **B5**.
		No ▶	If both heater water hoses become too hot to hold, GO to **B5**. If only one heater water hose becomes too hot to hold, a blockage is indicated. CHECK heater water hoses for obstructions. SERVICE or REPLACE as necessary. RETEST system. If heater water hoses check as OK, blockage is in the heater core. FLUSH engine cooling system. If flushing does not clear blockage, REPLACE heater core. RETEST system.
B5	CHECK TEMPERATURE CONTROL DOOR OPERATION		
	• Rotate temperature control knob from the full cool position to the full warm position and check operation of the temperature control door. • **Does the temperature control door operate correctly?**	Yes ▶	CHECK drive belt for proper tension or signs of slippage and wear. SERVICE or REPLACE as necessary. RETEST system.
		No ▶	CHECK temperature control door for a binding condition. Also CHECK the A/C temperature cable for connection to the temperature control door and A/C control. SERVICE or REPLACE as necessary. RETEST system.

Official Licensed Product
Ford Motor Company

REMOVAL AND INSTALLATION

Refrigerant Oil Addition

The FS-10 A/C compressor (19703) uses a unique high-quality refrigerant oil (for R-134a systems F2AZ-19577-AC), Motorcraft Part Number YN-12B or an equivalent refrigerant oil meeting Ford specification WSH-M1C231-B. A new replacement A/C compressor is shipped with no refrigerant oil. It is extremely important that only the specified type and quantity of refrigerant oil be used in the FS-10 A/C compressor. If there is a surplus of oil in the system, it will circulate with the refrigerant, reducing the cooling capacity of the system. Using too little oil or oil not meeting the Ford specification will result in poor lubrication of the A/C compressor.

When replacing a component of the refrigerant system, the procedures in this section must be followed to ensure that the total oil charge in the system is correct after the new part is installed.

When the A/C compressor is operated, oil quickly leaves the A/C compressor and is circulated through the system with the refrigerant. Eventually, a balanced condition is reached in which a certain amount of oil is retained in the A/C compressor and the majority of oil is continually circulated. If a component of the system is removed after the system has been operated, some oil will go with it. To maintain the original total oil charge, add oil as required to the new replacement part.

The procedures for replacing oil follow.

During A/C Compressor Replacement

NOTE: The suction accumulator/drier (19C836) and A/C evaporator core orifice (19D990) should also be replaced when the compressor is replaced.

A new service replacement FS-10 A/C compressor contains no refrigerant oil. Prior to installing the replacement A/C compressor, drain the refrigerant oil from the removed A/C compressor into a calibrated container. The shaft should be rotated about six to eight revolutions while pouring the oil from the ports. This effectively empties the A/C compressor of oil.

- If the amount of oil drained from the old A/C compressor was between 85 and 142 ml (3 and 5 oz.), pour the same amount (plus 1 additional ounce) of clean Motorcraft YN-12B refrigerant oil or equivalent meeting Ford specification WSH-M1C231-B into the new A/C compressor.
- If the amount of oil that was removed from the old A/C compressor is greater than 142 ml (5 oz.), pour 142 ml (5 oz.) of clean Motorcraft YN-12B refrigerant oil or equivalent meeting Ford specification WSH-M1C231-B into the new A/C compressor.
- If the amount of refrigerant oil that was removed from the old A/C compressor is less than 85 ml (3 oz.), pour 85 ml (3 oz.) of clean Motorcraft YN-12B refrigerant oil or equivalent meeting Ford specification WSH-M1C231-B into the new A/C compressor.

REMOVAL AND INSTALLATION (Continued)

During Component Replacement

NOTE: Cap all open refrigerant lines and components to prevent entry of dirt and moisture into the A/C system.

When replacing other components of the air conditioning system, measured quantities of the specified refrigerant oil should be added to the component to ensure that the total oil charge in the system is correct before the system is operated.

Clean refrigerant oil should be poured directly into the replacement components as follows:

- A/C evaporator core (19860): add 90 ml (3 oz.).
- A/C condenser core (19712): add 30 ml (1 oz.).
- Suction accumulator/drier: drain oil from removed accumulator/drier. Add same amount plus 60 ml (2 oz.) of clean refrigerant oil to new suction accumulator/drier.

If any other component such as an A/C evaporator core orifice or a hose is replaced, an additional 59 ml (2 oz.) refrigerant oil is necessary unless a hose bursts with a fully charged system. Then, the addition of refrigerant oil may be necessary with the amount to be determined by the technician. The suction accumulator/drier must also be replaced under these circumstances. Add an additional 59 ml (2 oz.) refrigerant oil to a system with a refrigerant leak.

Spring Lock Coupling

SPECIAL SERVICE TOOL(S) REQUIRED

Description	Tool Number
Spring Lock Coupling Disconnect Tool Set	T84L-19623-B

The spring lock coupling is a refrigerant line coupling held together by a garter spring inside a circular cage. When the coupling is connected, the flared end of the female fitting slips behind the garter spring inside the cage on the male end of the fitting. Once coupled, refrigerant is sealed inside the system through the use of O-rings on the refrigerant lines. These O-rings are made of a special material and are green in color. They are intended for use in R-134a refrigerant systems and must be replaced every time a refrigerant line coupling is disconnected and reconnected for replacement or for any other service reasons. Refer to the Service Parts List at the end of this procedure for more information on the O-rings or replacement garter springs.

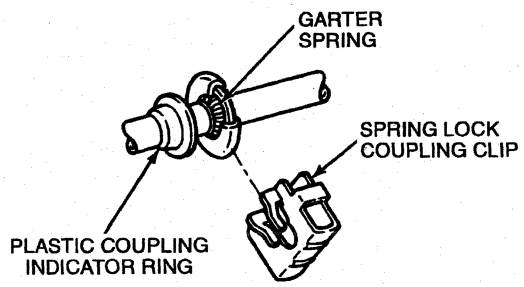

M5194-A

Coupling — Disconnected

1. Discharge the A/C system. Refer to Section 12-00. Observe all safety precautions.
2. If applicable, remove the spring lock coupling clip.
3. Fit the appropriate spring lock coupling disconnect tool from the Spring Lock Coupling Disconnect Tool Set T84L-19623-B to the coupling.

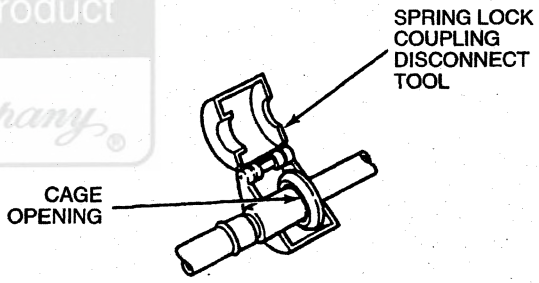

M5195-A

4. NOTE: The garter spring might not release if the spring lock coupling tool is cocked while pushing it into the cage.

   Close tool around refrigerant line and push it into the open side of the cage to expand the garter spring and release the female fitting.

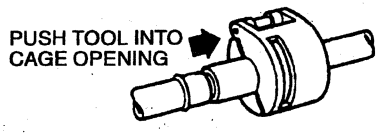

M5196-A

Licensed Product Ford Motor Company

REMOVAL AND INSTALLATION (Continued)

5. After the garter spring is expanded, pull the fitting apart. A slight twisting motion may be required to separate the coupling.

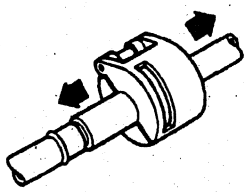

M5197-A

6. Once the coupling is disconnected, remove the tool and cap the line openings to prevent dirt and moisture from entering the system.
7. Remove the O-ring seals using a plastic toothpick or similar tool that will not scratch or damage the O-ring seat or tube portion of the coupling.

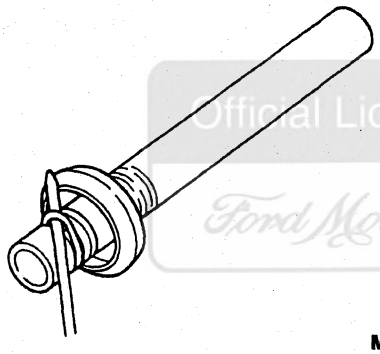

M5308-A

Coupling — Connect

1. Make sure the garter spring is properly installed in the cage on the male fitting. If the garter spring is missing, replace it with one of the proper size. Refer to the Service Parts List at the end of this procedure.
2. If the garter spring is damaged, it must be replaced. Remove the damaged garter spring with a small wire hook (do not use a screwdriver) and replace the garter spring with one of the proper size. Refer to the Service Parts List at the end of this procedure.
3. If applicable, remove any shipping caps and/or plugs from the ends of the refrigerant lines.
4. Lubricate and install new green O-rings on the female fitting using clean refrigerant oil YN-12B or equivalent meeting Ford specification WSH-M1C231-B. Refer to the Service Parts List at the end of this procedure for more information on the correct O-rings. The use of any O-ring other than the specified green O-ring may allow the connection to leak intermittently during vehicle operation.
5. Lubricate the male fitting, green O-ring seals and the inside of the female fitting with clean refrigerant oil YN-12B or equivalent meeting Ford specification WSH-M1C231-B.

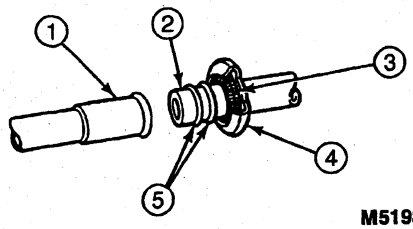

M5198-A

Item	Part Number	Description
1	—	Female Fitting
2	—	Male Fitting
3	—	Garter Spring
4	—	Cage
5	—	Replacement O-Ring Seals

6. Install plastic indicator ring into the cage opening of the male fitting, if the plastic indicator ring is to be used.
7. Fit female fitting to the male fitting and push until the garter spring snaps over the flared end of the female fitting.
8. If the plastic indicator ring is used, it will pop out of the cage opening when the coupling is connected to indicate engagement. The plastic indicator ring will remain free of the spring lock coupling but will be held captive on the refrigerant line. If the plastic indicator ring is not used, ensure coupling engagement by visually checking the garter spring is over the flared end of the female fitting.
9. Install the spring lock coupling clip, if applicable. The use of the spring lock coupling clip offers a secondary retention of the spring lock coupling.
10. Evacuate, leak test and recharge the A/C system. Refer to Section 12-00. Observe all safety precautions.

SERVICE PARTS LIST

Part Number	Description
F2AZ-19D690-B	O-Ring Seal Kit — A/C Spring Lock Coupling (Kit contains 3/8, 1/2 and 5/8 inch coupling O-rings and 3/8, 1/2 and 5/8 inch coupling garter springs).

Climate Control Assembly

SPECIAL SERVICE TOOL(S) REQUIRED

Description	Tool Number
Temperature Control Cable Removal Tool	T94P-18532-A

Official Licensed Product
Ford Motor Company

REMOVAL AND INSTALLATION (Continued)

Removal

1. Disconnect the battery ground cable (14301).
2. Remove the trim strip located above the A/C control (19980) and glove compartment area.
3. Remove two screws retaining the center finish trim panel to the instrument panel (04320).
4. Remove the center finish trim panel.
5. Remove four screws retaining the A/C control to the instrument panel and pull the A/C control away from the instrument panel far enough to gain access to the back of the A/C control.
6. Disconnect the electrical hardshell connectors from the function control switch and the heater blower motor switch (18578).
7. Disconnect the A/C plenum vacuum harness (18C581) from the A/C control.
8. Remove the A/C temperature cable (19988) from the A/C control using Temperature Control Cable Removal Tool T94P-18532-A and a small flat-bladed screwdriver. Insert Temperature Control Cable Removal Tool T94P-18532-A around the temperature cable head to release two of the retaining tabs. Using a small flat-bladed screwdriver, release the third retaining tab and remove the A/C temperature cable from the A/C control.
9. Remove the A/C control.

Temperature Cable Removal

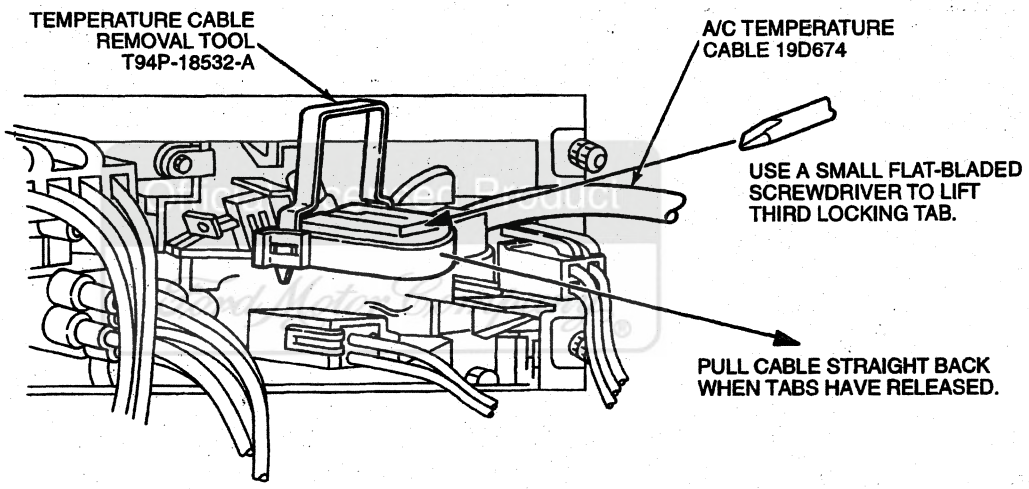

M5304-A

Installation

1. Connect the A/C plenum vacuum harness to the A/C control.
2. Connect the A/C temperature cable to the A/C control. Make sure all temperature control components are in the full warm position before installing the A/C temperature cable. Push the A/C temperature cable onto the A/C control until an audible click is heard.
3. Install the electrical hardshell connectors to the heater blower motor switch and the function control switch.
4. Insert the A/C control into the opening in the instrument panel.
5. Install four screws which retain the A/C control to the instrument panel.
6. Install the center finish trim panel to the instrument panel.
7. Install two screws retaining the center finish trim panel to the instrument panel.
8. Install the trim strip above the A/C control and glove compartment area (push on).
9. NOTE: When the battery (10655) has been disconnected and reconnected, some abnormal drive symptoms may occur while the powertrain control module (PCM)(12A650) relearns its adaptive strategy. The vehicle may have to be driven 16 km (10 miles) or more to relearn the strategy.

   Connect the battery ground cable.
10. Check the system for proper operation.

Illumination Bulbs

Removal

1. Remove trim strip above the A/C control and glove compartment area.

REMOVAL AND INSTALLATION (Continued)

2. Remove two screws retaining the center finish trim panel to the instrument panel.
3. Remove center finish trim panel.
4. Remove four screws retaining the A/C control to the instrument panel.
5. Pull A/C control from instrument panel far enough to gain access to the back of the A/C control.
6. Remove instrument panel lamp socket and bulb (13B765) (2) from the A/C control by turning one-quarter turn and pull out of A/C control (one is located to the left of the function selector switch, the other is located between the heater blower motor switch and A/C temperature control bracket (19D816)).
7. Remove the bulb from the socket by pulling straight out.

Climate Control Rearview

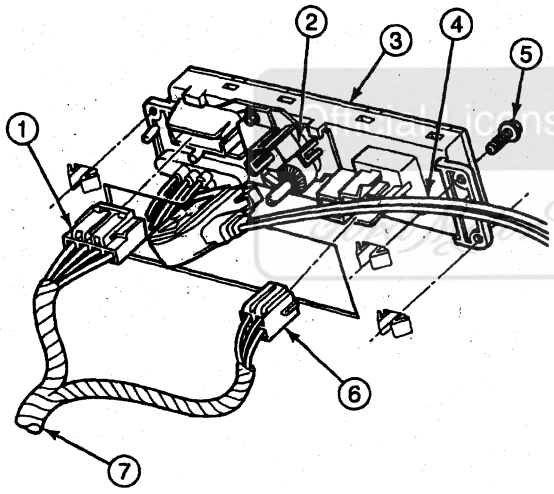

M5305-A

Item	Part Number	Description
1	14401	Main Wiring (to Function Selector Switch)
2	19D816	A/C Temperature Control Bracket
3	19980	A/C Control
4	19988	A/C Temperature Cable
5	N803877-S36B	Screw (4 Req'd)
6	14401	Main Wiring (to Blower Switch)
7	14401	Main Wiring

Installation

1. Replace bulb with correct replacement. Refer to the Ford Master Parts Catalog for replacement bulb specification.
2. Insert instrument panel lamp socket and bulb into the A/C control and twist one-quarter turn to secure in place.
3. Install A/C control in instrument panel opening.
4. Install four screws retaining A/C control to instrument panel.
5. Install center finish trim panel.
6. Install two screws retaining center finish trim panel to instrument panel.
7. Install trim strip above A/C control and glove compartment area (push on).
8. Check system for proper operation.

Switch Knobs

Removal

Grasp knob (18519) in fingers and pull directly away from A/C control.

Installation

Align keyed portion of knob with keyed portion of shaft and push in place until knob bottoms against A/C control shaft. All climate control knobs remove and install in the same manner.

Heater Blower Motor Switch

Removal

1. Remove A/C control from instrument panel. Do not detach the cables.
2. Remove knob from the heater blower motor switch by pulling it off its shaft.
3. Move A/C control away from opening and disconnect wire hardshell connector by lifting the snap-lock retainer with a screwdriver and pulling the connector off the heater blower motor switch.
4. Remove the screw retaining the heater blower motor switch to the back of the A/C control, and rotate the heater blower motor switch counterclockwise to release from the retaining tabs.

Installation

1. Insert the shaft without its knob through its opening in the A/C control.
2. Rotate the heater blower motor switch clockwise to engage the retaining tabs. Replace the screw previously removed.
3. Connect the hardshell wire connector to the heater blower motor switch.
4. Install A/C control.
5. Install knob.
6. Check the heater blower motor switch for proper operation.

Function Selector Switch

Removal

1. Remove A/C control.

REMOVAL AND INSTALLATION (Continued)

2. Remove the screw that secures the function selector switch to the heater control assembly and remove switch.
3. Pull the vacuum assembly back.

Installation

1. Follow removal procedure in reverse order.
2. Start the engine to provide vacuum. Move the function selector knob to each of its operating positions to verify that vacuum is being distributed properly through the function selector switch to the applicable vacuum control motor (18A318).

Cables

Temperature Control Cable

Removal

SPECIAL SERVICE TOOL(S) REQUIRED

Description	Tool Number
Temperature Control Cable Removal Tool	T94P-18532-A

1. Disconnect battery ground cable (14301).
2. Release glove box to gain access to the A/C temperature cable (19988) at the heater air plenum chamber (18471).
3. Release the retaining tab on the A/C temperature cable and lift the cable off the heater air plenum chamber.
4. Remove the trim strip above the A/C control (19980) and glove compartment area.
5. Remove two screws retaining the center finish trim panel to the instrument panel (04320).
6. Remove the center finish trim panel.
7. Remove four screws retaining the A/C control to the instrument panel.
8. Pull the A/C control from the instrument panel far enough to gain access to the back of the A/C control.
9. Remove the hardshell electrical connectors from the heater blower motor switch (18578) and the function control switch.
10. Pull temperature control knob (18519) off A/C control.
11. Remove one screw retaining the A/C temperature control bracket (19D816) to the A/C control.
12. Rotate the A/C temperature control bracket and remove from A/C control.
13. Insert Temperature Control Cable Removal Tool T94P-18532-A on A/C temperature cable to release two of three locking tabs. Use a small flat-bladed screwdriver to release the third locking tab and remove A/C temperature cable from A/C temperature control bracket by pulling directly from A/C temperature control bracket.
14. Remove A/C temperature control bracket from vehicle, paying particular attention to routing of cable to aid in installation.

Temperature Control Cable Plenum Attachment

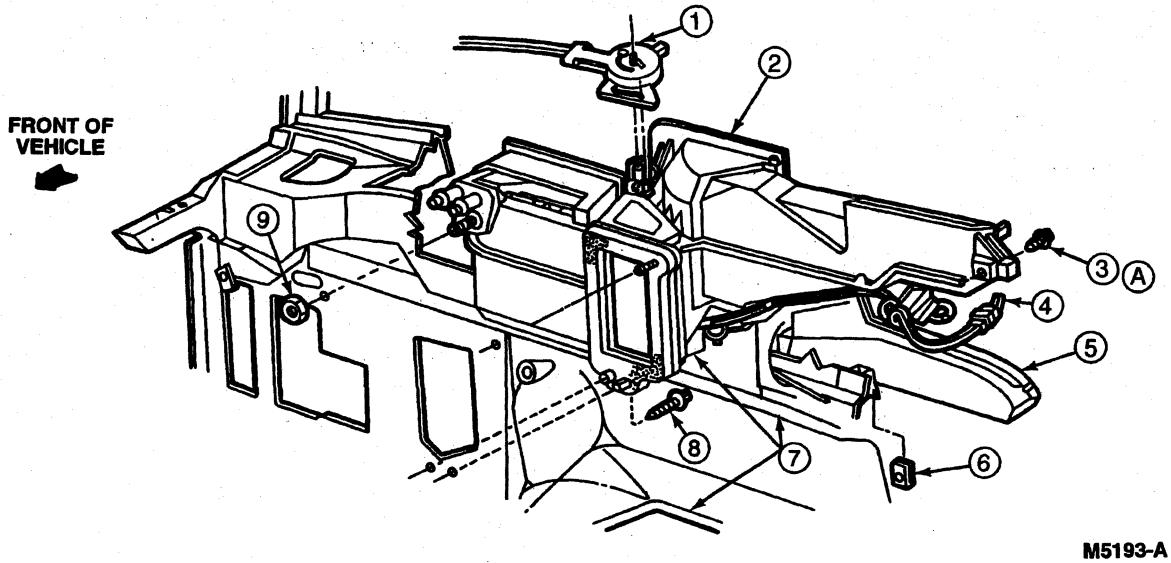

M5193-A

REMOVAL AND INSTALLATION (Continued)

Item	Part Number	Description
1	19988	A/C Temperature Cable
2	18471	Heater Air Plenum Chamber
3	56950-S2	Screw
4	18C581	A/C Plenum Vacuum Harness
5	18C433	Heater Outlet Floor Duct

(Continued)

Item	Part Number	Description
6	45261-S2	J-Nut
7	01610	Dash Panel
8	56956-S2	Screw
9	N801969-S2	Nut
A	—	Tighten to 2.5-3.0 N·m (22-27 Lb-In)

Temperature Cable Removal — A/C Control

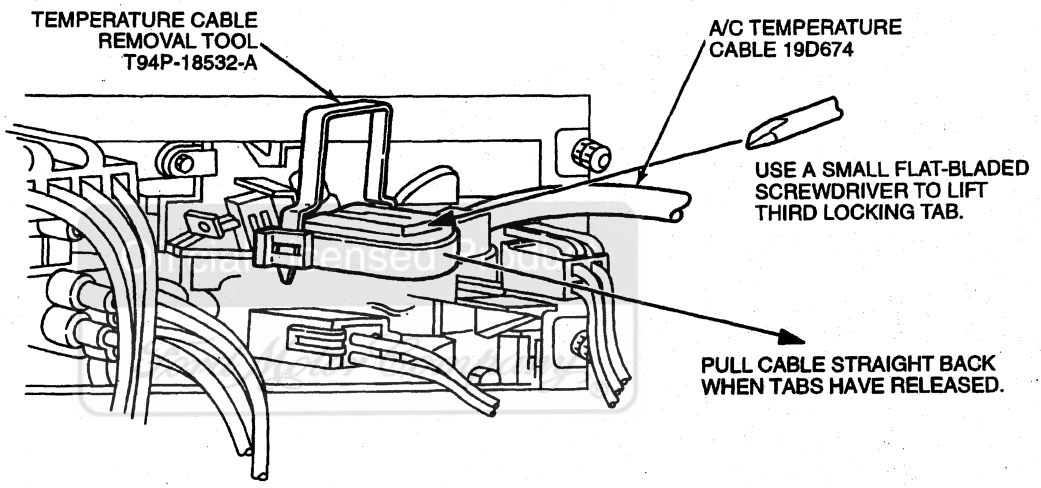

Installation

1. NOTE: All temperature control components are shipped from the factory in a full warm position and must remain in this position until fully installed. In addition, all existing components must be set in a full warm position before any installation can be attempted.

   Route A/C temperature cable in the same manner as cable removed.
2. Install A/C temperature cable on heater air plenum chamber by aligning locating tab on the A/C temperature cable with locating position on heater air plenum chamber. Make sure the temperature blend door actuator post is aligned within the cable head cam.
3. Push A/C temperature cable over temperature control door cam until an audible click is heard indicating engagement. If a click is not heard, it will be necessary to visually ensure cable is fully seated in position.
4. Position temperature control in full warm position. Install A/C temperature cable on A/C temperature control bracket and push until an audible click is heard.
5. Install A/C temperature control bracket on A/C control and rotate into position.
6. Install screw retaining A/C temperature control bracket to A/C control.
7. Connect electrical hardshell connectors to heater blower motor switch and function control switch.
8. Install A/C control into instrument panel opening.
9. Install four screws retaining A/C control to instrument panel.
10. Install center finish trim panel around A/C control.
11. Install two screws retaining center finish trim panel to instrument panel.
12. Install trim strip above A/C control and glove compartment area (push on).
13. Install temperature control knob.

REMOVAL AND INSTALLATION (Continued)

14. Rotate temperature control knob and check for proper operation of temperature control components.
15. Attach glove compartment.
16. NOTE: When the battery (10655) has been disconnected and reconnected, some abnormal drive symptoms may occur while the powertrain control module (PCM) relearns its adaptive strategy. The vehicle may have to be driven 16 km (10 miles) or more to relearn the strategy.

    Connect the battery ground cable.

Instrument Panel

Refer to Section 01-12.

A/C Evaporator Core Housing

SPECIAL SERVICE TOOL(S) REQUIRED

Description	Tool Number
Spring Lock Coupling Disconnect Tool Set	T84L-19623-B

Removal

NOTE: Cap all open refrigerant lines and components to prevent entry of dirt and moisture into the A/C system.

1. Recover refrigerant from system following the recommended service procedures. Refer to Section 12-00. Observe all safety precautions.
2. Disconnect vacuum supply hose at dash panel. Position A/C vacuum check valve (19A563) away from A/C evaporator case (19897).
3. Disconnect A/C manifold and tube (19D734) from A/C evaporator core (19860) using Spring Lock Coupling Disconnect Tool Set T84L-19623B.
4. Disconnect evaporator to compressor suction line (19867) from suction accumulator/drier (19C836). Cap all open refrigerant lines to prevent entrance of dirt and moisture.
5. Disconnect heater water hoses (18472) from heater core (18476) and plug heater water hoses with suitable 15.87-mm (5/8-inch) plugs.
6. Working in passenger compartment, remove two screws or nuts retaining bottom of A/C evaporator case to dash panel (01610). One screw also attaches lower edge of A/C evaporator case to dash panel.
7. Unplug A/C plenum vacuum harness (18C581) and two wiring connectors to main wiring (14401) located near right end of plenum harness coming from recirc. duct opening back into opening.
8. Remove two screws retaining right side of recirc. duct to dash panel.
9. Remove two retaining nuts retaining A/C evaporator case and recirc. duct to dash panel.
10. Pull A/C evaporator case and recirc. duct forward and remove it from vehicle.

Official Licensed Product Ford Motor Company

REMOVAL AND INSTALLATION (Continued)

Evaporator Assembly and Heater Plenum Chamber Case

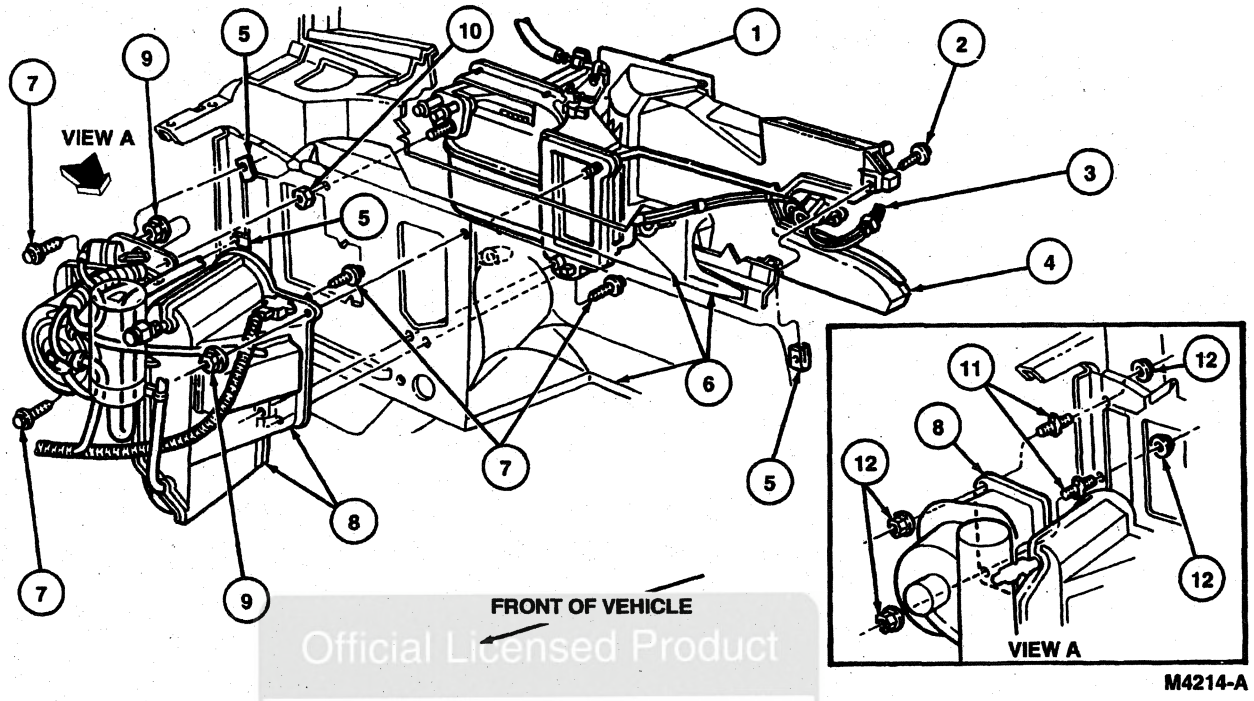

Official Licensed Product
Ford Motor Company

Item	Part Number	Description
1	18471	Heater Air Plenum Chamber
2	—	Hex Screw/Washer Head (Part of 18471)
3	—	Vacuum Hose (Part of Vacuum Harness)
4	18C433	Heater Outlet Floor Duct
5	45261-S2	J-Nut (3 Req'd)

(Continued)

Item	Part Number	Description
6	01610	Dash Panel
7	56956-S2	Hex Screw and Washer Assy
8	19850	A/C Evaporator Housing
9	N621906-S2	Nut (2 Req'd)
10	N801696-S2	Nut
11	N803912-S2	Stud (2 Req'd)
12	621906	Nut (4 Req'd)

Installation

1. Position recirc. duct and A/C evaporator case to dash panel. Install two retaining nuts along top edge of assembly.
2. Install two screws along right side of recirc. duct.
3. Working in passenger compartment, install top screws to retain bottom of A/C evaporator case to dash panel.
4. Connect A/C plenum vacuum harness from recirc. duct opening to the dash panel.
5. Using a new green O-ring lubricated with clean refrigerant oil, connect A/C manifold and tube to A/C evaporator core.
6. Using a new green O-ring lubricated with clean refrigerant oil, connect evaporator to compressor suction line to suction accumulator/drier. Tighten connection to 34-44 N·m (25-32 lb-ft) using two wrenches.
7. Connect heater water hoses to heater core. Tighten clamps only to 1.4-2.0 N·m (12-18 lb-in).
8. Connect A/C plenum vacuum harness and two wiring connectors to main wiring under instrument panel (04320).
9. Fill and bleed cooling system. Refer to Section 03-03 in the Powertrain, Drivetrain Manual.
10. Leak test, evacuate and charge system following recommended procedures. Refer to Section 12-00. Observe all safety precautions.
11. Check system for proper operation.
12. Perform leak test. Refer to Section 12-00 for Evaporator Leak Test.

REMOVAL AND INSTALLATION (Continued)

A/C Evaporator Core

NOTE: Before replacing any A/C evaporator core (19860) within the warranty for suspected refrigerant leaks, it is mandatory that an on-vehicle leak test be performed. Refer to Section 12-00.

SPECIAL SERVICE TOOL(S) REQUIRED

Description	Tool Number
Spring Lock Coupling Disconnect Tool Set	T84L-19623-B

Removal

1. NOTE: Cap all open refrigerant lines and components to prevent entry of dirt and moisture into the A/C system.

   Discharge refrigerant system following recommended service procedures. Observe all safety precautions. Refer to Section 12-00.
2. Disconnect electrical connector from A/C cycling switch (19E561) on side of suction accumulator/drier (19C836).
3. Remove A/C cycling switch from suction accumulator/drier.
4. Disconnect A/C manifold and tube (19D734) from suction accumulator/drier. Use a backup wrench to loosen fitting. Cap evaporator to compressor suction line (19867) and suction accumulator/drier to prevent entry of dirt and excess moisture.
5. Using Spring Lock Coupling Disconnect Tool Set T84L-19623-B, disconnect condenser to evaporator tube (19835) from A/C evaporator core. Cap condenser to evaporator tube to prevent entry of dirt and excess moisture.
6. In passenger compartment, remove one screw retaining A/C evaporator housing (19850).
7. Remove one nut retaining MAP sensor bracket to the upper left corner of A/C evaporator case (19897).
8. Remove spring clip holding MAP sensor to housing (on all gas engines). Put MAP sensor aside.
9. Remove one nut retaining upper left corner of A/C evaporator case to dash panel (01610).
10. Remove six screws retaining left A/C evaporator case cover (19B735) to A/C evaporator case.
11. Remove left A/C evaporator case cover from A/C evaporator case.
12. Remove two screws retaining suction accumulator/drier to A/C evaporator housing.
13. Remove A/C evaporator core and suction accumulator/drier from A/C evaporator case.

Installation

1. Install A/C evaporator core into A/C evaporator case.
2. Position A/C evaporator case cover to A/C evaporator case. Install six screws to retain A/C evaporator case cover to A/C evaporator case along flange.
3. Install one nut to retain upper left corner of A/C evaporator case to dash panel.
4. Install one spring clip to rib on A/C evaporator case and push into position.
5. Install one nut to retain upper left corner of MAP sensor bracket (gas engines) to the upper left corner of A/C evaporator case.
6. In passenger compartment, install one screw to retain lower edge of the heater air plenum chamber (18471) and bottom of the A/C evaporator case to dash panel.
7. Remove cap from condenser to evaporator tube connection and install a new A/C evaporator core orifice (19D990) in the tube.
8. Using new O-ring lubricated with clean refrigerant oil, connect condenser to evaporator tube to A/C evaporator core. Push spring lock coupling until it snaps secure. Pull back to make sure connection is completed.
9. Add 88.7 ml (3 ounces) of clean refrigerant oil to a new suction accumulator/drier to compensate for oil lost in replacement of A/C evaporator core.
10. Using a new O-ring lubricated with clean refrigerant oil, connect suction accumulator/drier to A/C evaporator core.
11. Install A/C accumulator bracket (19D607) (two screws). Tighten fitting to 21-27 N·m (15-20 lb-ft). Use a backup wrench on suction accumulator/drier to prevent component damage.
12. Connect suction accumulator/drier to the A/C evaporator housing with two screws.
13. Using a new O-ring lubricated with clean refrigerant oil, connect A/C manifold and tube to suction accumulator/drier. Use a backup wrench to prevent component damage.
14. Using a new O-ring lubricated with clean refrigerant oil, install A/C cycling switch on suction accumulator/drier nipple.
15. Connect electrical connector to A/C cycling switch.
16. Leak test, evacuate and charge system following recommended procedures. Refer to Section 12-00. Observe all safety precautions.
17. Check system for proper operation.

Heater Core

Removal

1. Allow the engine to cool. Observe the safety precautions in Section 03-03 in the Powertrain, Drivetrain Manual.

REMOVAL AND INSTALLATION (Continued)

2. Place a thick cloth over the radiator cap. Turn the cap slowly to its first stop to release system pressure. When the pressure has been released, tighten the radiator cap.
3. Disconnect the heater water hoses (18472) from the heater core (18476). Plug the hoses.
4. Remove the glove compartment.
5. From inside the passenger compartment, remove the seven screws retaining the heater core cover (18B300) to the heater air plenum chamber (18471).
6. Disconnect the vacuum source. Leave the A/C plenum vacuum harness (18C581) attached to the heater core cover. Remove the heater core cover.
7. Remove the heater core from the heater air plenum chamber.

Installation

1. Position the heater core and heater core case seal (18658) in the heater air plenum chamber.
2. Install the heater core cover on the heater air plenum chamber and secure it with its seven attaching screws. Make sure the A/C plenum vacuum harness is not trapped or pinched during the installation.
3. Connect the A/C plenum vacuum harness to its source connection.
4. Install heater water hoses on the heater core at dash panel (01610) in engine compartment. Do not overtighten the clamps.
5. Check coolant level and add coolant as required. Refer to Section 03-03 in the Powertrain, Drivetrain Manual.
6. Check system for proper operation and coolant leaks.
7. Install glove compartment.
8. Check system for proper operation.

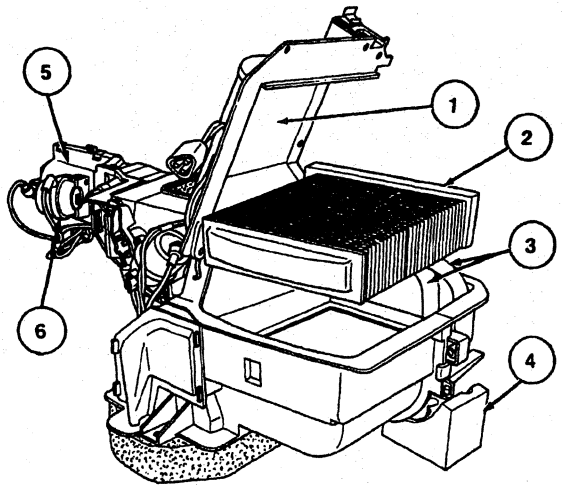

M3151-B

Item	Part Number	Description
1	18B300	Heater Core Cover
2	18476	Heater Core
3	—	Heater Core Tubes (Part of 18476)
4	18596	Heater Core Tube to Cowl Gasket
5	18471	Heater Air Plenum Chamber
6	18A318	Vacuum Control Motor (Floor/Defrost)

Heater Blower Motor and Blower Motor Wheel Assembly

Removal

1. Disconnect electrical hardshell connector.
2. Disconnect blower motor housing tube (19A786) from blower motor (18527).
3. Remove four retaining screws and remove blower motor from A/C blower housing (19930).
4. Remove pushnut from shaft and remove blower motor wheel (18504) from shaft.

Installation

1. NOTE: The pushnut from shaft is included with a new blower motor wheel, but not with blower motor.

   Position blower motor wheel on shaft. Then, install a new pushnut on shaft.
2. Install a new mounting seal on flange.
3. Position blower motor in A/C blower housing and install four retaining screws.

REMOVAL AND INSTALLATION (Continued)

4. Cement blower motor housing tube on nipple of A/C blower housing with Liquid Butyl Sealer C9AZ-19554-B or equivalent meeting Ford specification ESB-M4G162-A.
5. Connect electrical hardshell connector.
6. Check blower motor for proper operation.

Blower Motor Switch Resistor

Removal

1. Disconnect wire connector from heater blower motor switch resistor (18591).
2. Remove two screws retaining heater blower motor switch resistor to A/C evaporator case (19897) and remove heater blower motor switch resistor.

Installation

1. Apply a bead of caulking cord D6AZ-19560-A or equivalent meeting Ford specification ESB-M4G32-A around the mounting board.
2. Position heater blower motor switch resistor in opening in A/C evaporator case and install two retaining screws.
3. Connect wire connector to heater blower motor switch resistor.
4. Check blower motor (18527) for proper operation in all speeds.

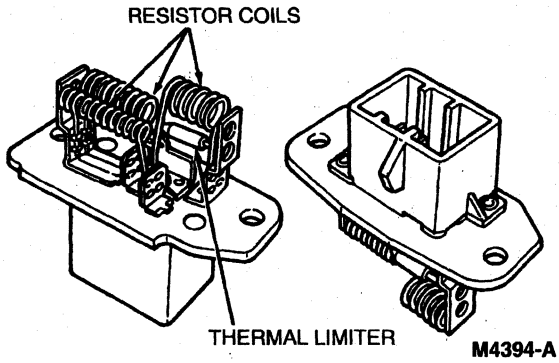

The louvers in each of these registers are similar, with a single adjusting knob provided to move the vertical vanes from side to side and the horizontal vanes up and down. The primary differences between the two types of register assemblies are length and mounting tabs. The registers in the instrument cluster have four mounting lugs and are shorter front-to-rear than those in the right-hand portion of the instrument panel that have three mounting lugs.

Louvers

Removal

1. The louver assemblies in each register can be removed from the register with A/C Louver Assembly Remover D92T-19703-A or equivalent. The tool, when inserted around the louver and pushed forward, will depress the louver retaining tabs and allow removal of the tool and louver assembly as one unit.

Installation

1. Place louver assembly in instrument panel opening and push until an audible click is heard.
2. Check for proper operation.

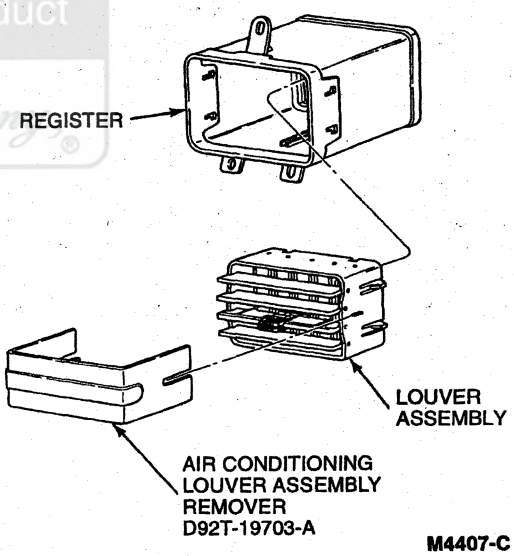

Official Licensed Product
Ford Motor Company

Instrument Panel Register Assemblies

There are four register and louver assemblies in the instrument panel (04320). Two are located in the instrument panel in the areas near the upper corners of the glove compartment door; the other two are located near the right and left edges of the instrument cluster.

Heater Air Plenum Chamber

SPECIAL SERVICE TOOL(S) REQUIRED

Description	Tool Number
Spring Lock Coupling Disconnect Tool Set	T84L-19623-B

REMOVAL AND INSTALLATION (Continued)

Removal

1. NOTE: Cap all open refrigerant lines and components to prevent entry of dirt and moisture into the A/C system.

   Disconnect the battery ground cable (14301).
2. Discharge the refrigerant system using approved recovery equipment. Refer to Section 12-00.
3. Remove the instrument panel (04320). Refer to Section 01-12.
4. Disconnect vacuum supply hose at dash panel (01610). Position the A/C vacuum check valve (19A563) away from A/C evaporator case (19897).
5. Disconnect condenser to evaporator tube (19835) from the A/C evaporator core (19860) using Spring Lock Coupling Disconnect Tool Set T84L-19623-B.
6. Disconnect A/C manifold and tube (19D734) from suction accumulator/drier (19C836).
7. Disconnect heater water hoses (18472) from heater core (18476) and plug heater water hoses.
8. Working in passenger compartment, remove two screws or nuts retaining bottom of A/C evaporator case to dash panel. One screw also retains lower edge of A/C evaporator case to dash panel.
9. Unplug A/C plenum vacuum harness (18C581) and two wiring connectors to main wiring (14401) located near right end of A/C plenum vacuum harness coming from recirc. duct opening back into opening.
10. Remove two screws retaining right side of recirc. duct to dash panel.
11. Remove two retaining nuts retaining A/C evaporator case and recirc. duct to dash panel.
12. Pull A/C evaporator case and recirc. duct forward and remove from vehicle.
13. Remove the heater outlet floor duct (18C433) from heater air plenum chamber (18471).
14. Remove four fasteners that retain the left end of the heater air plenum chamber to the dash panel.
15. Disconnect A/C temperature cable (19988) and vacuum connector at A/C control (19980).
16. Disconnect source vacuum block secured to the right of the heater core cover (18B300).
17. Pull heater air plenum chamber forward to disengage three studs from dash panel.
18. NOTE: Care must be taken to avoid spilling any coolant from heater core.

    Lower heater air plenum chamber from its location under the instrument panel.

Licensed Product
Ford Motor Company

Plenum Installation

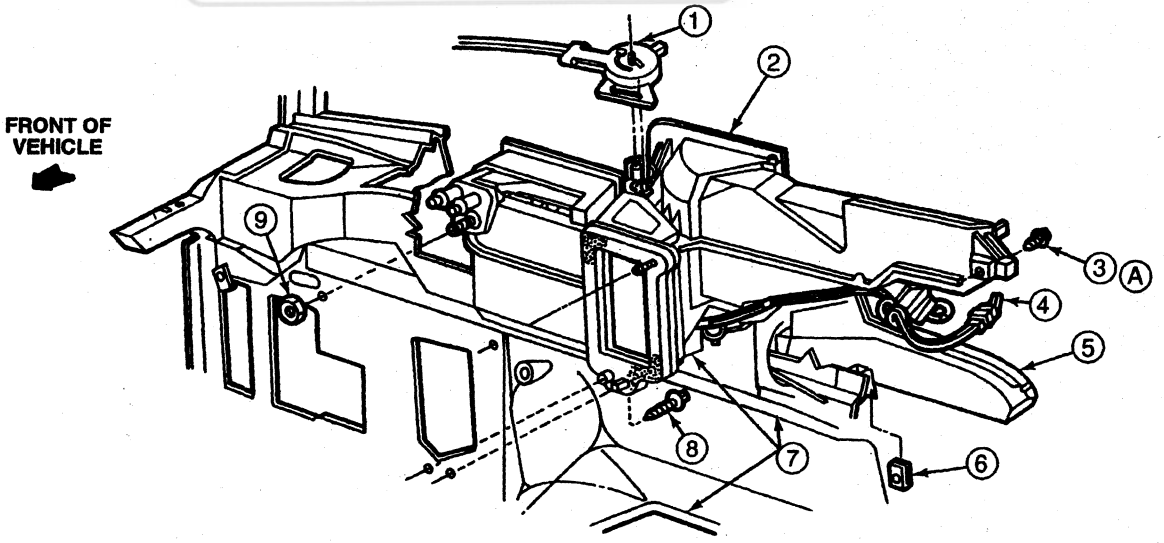

M5193-A

Item	Part Number	Description
1	19988	A/C Temperature Cable
2	18471	Heater Air Plenum Chamber
3	56950-S2	Screw

(Continued)

Item	Part Number	Description
4	18C581	A/C Plenum Vacuum Harness
5	18C433	Heater Outlet Floor Duct
6	45261-S2	J-Nut

(Continued)

REMOVAL AND INSTALLATION (Continued)

Item	Part Number	Description
7	01610	Dash Panel
8	56956-S2	Screw

(Continued)

Item	Part Number	Description
9	N801969-S2	Nut
A	—	Tighten to 2.5-3.0 N·m (22-27 Lb-In)

Installation

1. Position heater air plenum chamber against dash panel. Install one screw to retain the left end of heater air plenum chamber to dash panel.
2. Position A/C evaporator case against dash panel, making sure the studs are inserted through holes in dash panel and flange.
3. Position instrument panel and tighten its retaining screws.
4. Install A/C temperature cable to heater air plenum chamber. Connect control vacuum and source vacuum hoses.
5. Position heater outlet floor duct and install fasteners.
6. Working in passenger compartment, install screws to attach A/C evaporator case to dash panel.
7. Using a new green O-ring lubricated with clean refrigerant oil, connect A/C manifold and tube to A/C evaporator core.
8. Using a new green O-ring lubricated with clean refrigerant oil, connect A/C manifold and tube to suction accumulator/drier. Tighten connection to 34-44 N·m (25-32 lb-ft) using two wrenches.
9. Connect heater water hoses to heater core. Tighten clamps to 1.4-2.0 N·m (12-18 lb-in).
10. Connect A/C plenum vacuum harness and two electrical hardshell connectors to main wiring under instrument panel.
11. Fill and bleed cooling system. Refer to Section 03-03 in the Powertrain, Drivetrain Manual.
12. Evacuate, leak test and recharge system following recommended procedures. Refer to Section 12-00.
13. NOTE: When the battery (10655) has been disconnected and reconnected, some abnormal drive symptoms may occur while the powertrain control module (PCM)(12A650) relearns its adaptive strategy. The vehicle may need to be driven 16 km (10 miles) or more to relearn the strategy.

    Connect the battery ground cable.
14. Check heating and A/C systems for proper operation.

Demister Nozzles and Hoses

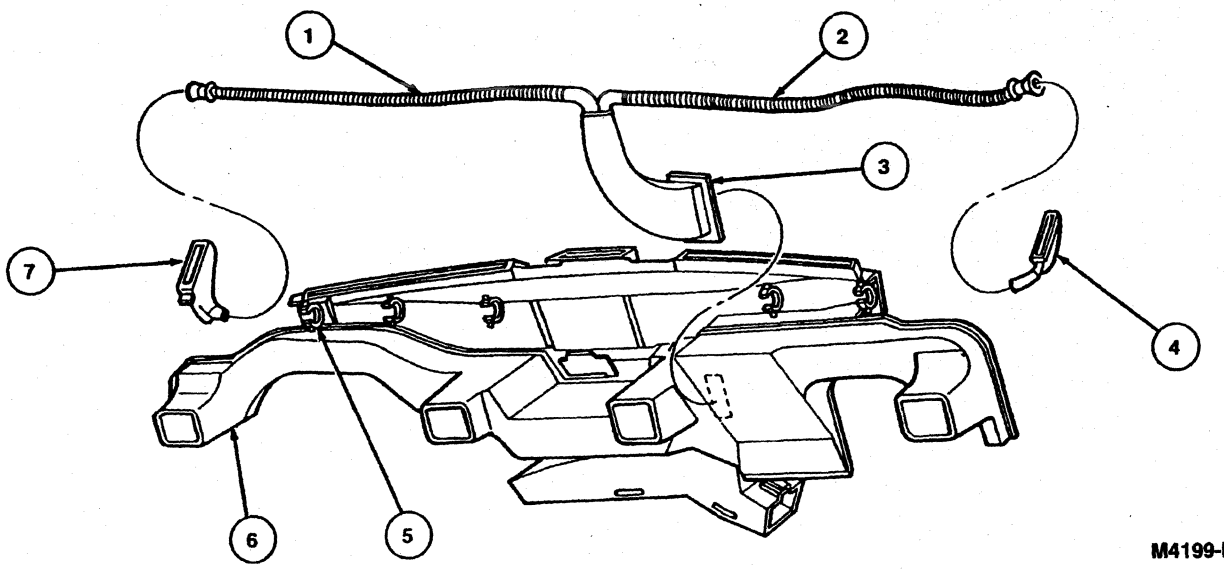

M4199-B

REMOVAL AND INSTALLATION (Continued)

Item	Part Number	Description
1	19E630	A/C Side Window Demister and Hose (LH)
2	19E630	A/C Side Window Demister and Hose (RH)
3	19E680	A/C Demister Hose Connector
4	—	Right Demister Nozzle (Part of 19E658)

(Continued)

Item	Part Number	Description
5	19B632	A/C Accumulator Tube Support Clip (5 Req'd)
6	—	Defroster Outlets, Instrument Panel Ducts and Floor Ducts (Part of 19E727)
7	—	Left Demister Nozzle (Part of 19E659)

Ducts

The defroster and ventilation ducts are a two-piece, adhesive-bonded assembly that attaches to the instrument panel with screws.

Duct and Support Assembly

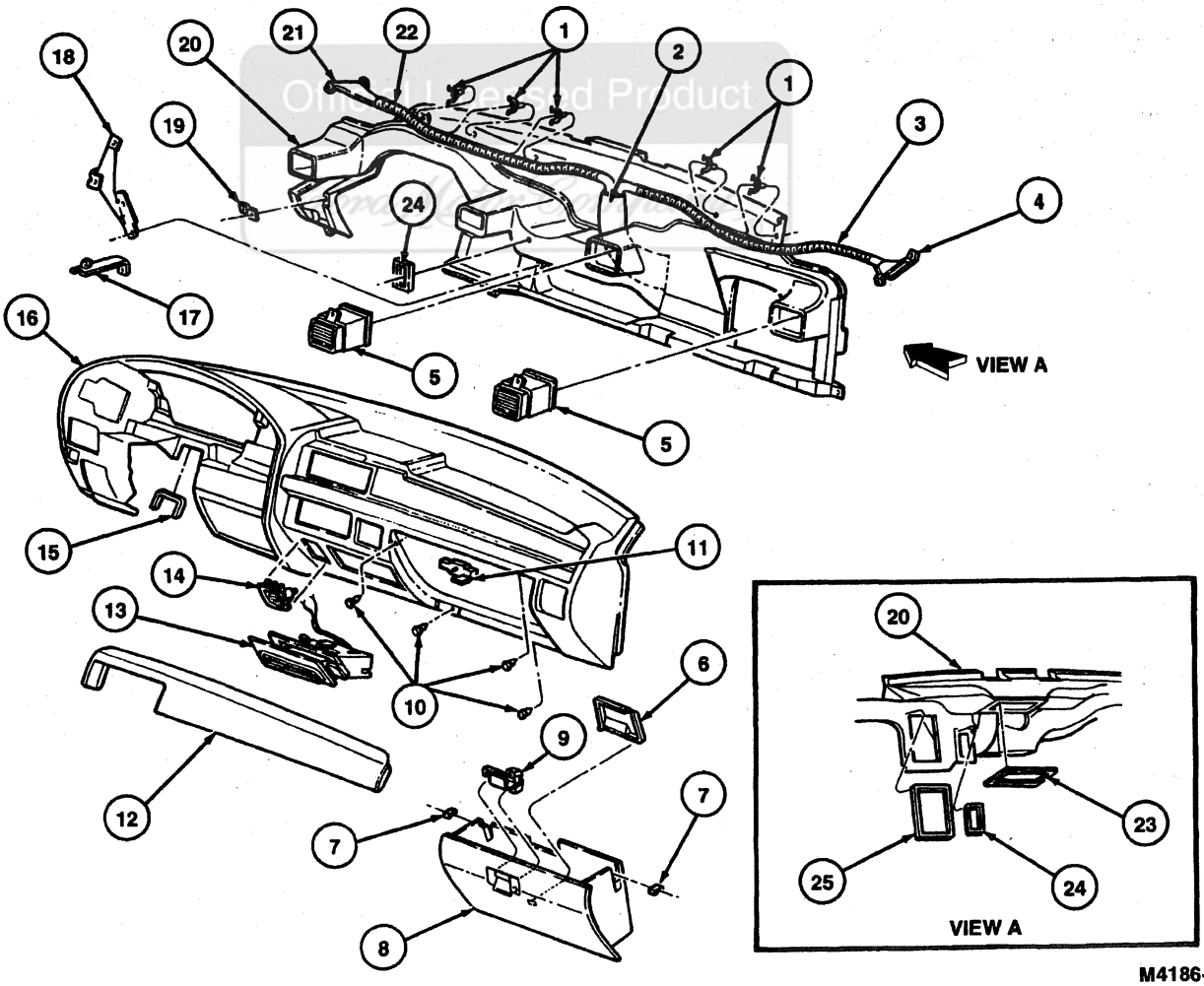

M4186-B

REMOVAL AND INSTALLATION (Continued)

Item	Part Number	Description
1	19B632	A/C Accumulator Tube Support Clip
2	—	Demister Hose Connector (Part of 19E630)
3	19E630	A/C Side Window Demister and Hose (RH)
4	—	Demister Duct (RH) (Part of 19E658)
5	19893	A/C Register
6	15061A40	Glove Compartment Door Latch Cover
7	7006115	Glove Compartment Bumpers
8	1506024	Glove Compartment Assy
9	6106004	Glove Latch Assy
10	N804A28-S	Glove Compartment Bumpers
11	15A563	Glove Compartment Lamp and Catch Assy
12	1504282	Instrument Panel Pad and Retainer Assy
13	1504810	Instrument Panel Ash Receptacle Assy
14	19N236	Auxiliary Power Point Socket Assy
15	1501657	Steering Column Opening Insulator
16	04320	Instrument Panel
17	15044F80	Instrument Panel Radio Mounting Bracket Assy
18	15047A30	Instrument Panel Center Bracket
19	14W163	Fuse Block Bracket
20	19E726	Duct and Support Assy
21	—	Demister Duct (LH) (Part of 19E659)
22	19E630	A/C Side Window Demister and Hose (LH)
23	18C367	Defroster Nozzle Seal
24	19C901	Demister Seal
25	19C901	A/C Seal

(Continued)

Official Licensed Product
Ford Motor Company

Demister Nozzle and Duct

Removal

1. Remove instrument panel. Refer to Section 01-12.
2. Remove two nuts retaining the A/C side window demister and hose (19E630) and one nut plus one spring nut retaining the A/C side window demister and hose to the instrument panel (04320).
3. Remove three push-screws retaining the A/C demister hose connector (19E680) to the structural duct assembly. Disconnect the flexible hoses that slide over the input end of each nozzle.

Installation

1. To install the nozzles, hoses, and/or connector, install two retaining nuts to the left A/C side window demister and hose and one nut to the right A/C side window demister and hose.
2. Attach three push-screws through the A/C demister hose connector and into the structural duct.
3. Slide the demister hoses that were removed over their retaining locations.
4. Install the instrument panel. Refer to Section 01-12.

Register

Removal

1. Disconnect battery ground cable (14301) from battery negative terminal.
2. Remove instrument panel. Refer to Section 01-12.
3. Rotate instrument panel rearward as far as necessary to permit removal of register ducts from instrument panel.
4. Remove windshield defroster hose nozzle (18490).
5. Remove register duct retaining screws. Remove the duct.

Installation

1. Position register ducts in instrument panel and install the retaining screws.
2. Install windshield defroster hose nozzle.
3. Rotate instrument panel forward and install. Refer to Section 01-12.
4. NOTE: When the battery (10655) has been disconnected and reconnected, some abnormal drive symptoms may occur while the powertrain control module (PCM)(12A650) relearns its adaptive strategy. The vehicle may need to be driven 16 km (10 miles) or more to relearn the strategy.

   Connect battery ground cable.

Heater Outlet Floor Duct

Removal

1. Remove the A/C plenum vacuum harness (18C581) from the forward slot on the bottom edge of the heater outlet floor duct (18C433).

REMOVAL AND INSTALLATION (Continued)

2. Remove the plastic retaining screw from the bottom side of the heater air plenum chamber (18471).
3. Remove the pushnut sleeve from the attaching hole.
4. Disengage the heater outlet floor duct from the heater air plenum chamber.

Installation

1. Position the heater outlet floor duct on the heater air plenum chamber and engage the lugs inside the heater outlet floor duct with their mating slots in the heater air plenum chamber. Tilt the heater outlet floor duct into place, then push in to secure engagement.
2. Start the plastic screw into the pushnut sleeve. Then, install through the flange and into the hole in the heater air plenum chamber. Be sure the attachment is secure.
3. Clip the A/C plenum vacuum harness to the heater outlet floor duct.

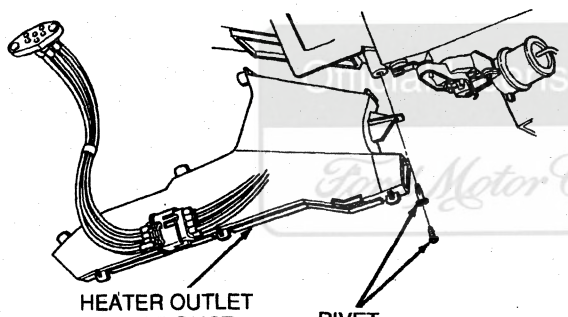

M4200-B

Doors

A/C Air Temperature Control

The damper doors inside the heater air plenum chamber (18471) cannot be replaced. As a result, if there is a damaged MIX or panel/defrost door, the heater air plenum chamber, including these doors, must be replaced. The heater air plenum chamber must also be replaced if there is damage to the mounting studs that cannot be repaired.

Heater and A/C Inlet Duct

Removal

1. Disconnect the electrical hardshell connector and remove the blower motor (18527).
2. If only the vacuum control motor (18A318) is to be removed, disconnect the two screws retaining the vacuum control motor to the upper surface of the outside door duct.
3. Pry the vacuum control motor and arm assembly upward at the arm end to free it from its mounting peg. A retaining flange, which is an integral part of the crank, peg, and flange component, can partially obstruct the arm in its upward movement along the peg. If this retaining flange should break off when forcing the arm upward, a 3/16-inch spring nut (Part No. 383358-S) must be used to retain the arm when the same or replacement vacuum control motor is installed.

Unauthorized Product
Ford Motor Company

REMOVAL AND INSTALLATION (Continued)

Outside Air/Recirculated Air Door Vacuum Motor

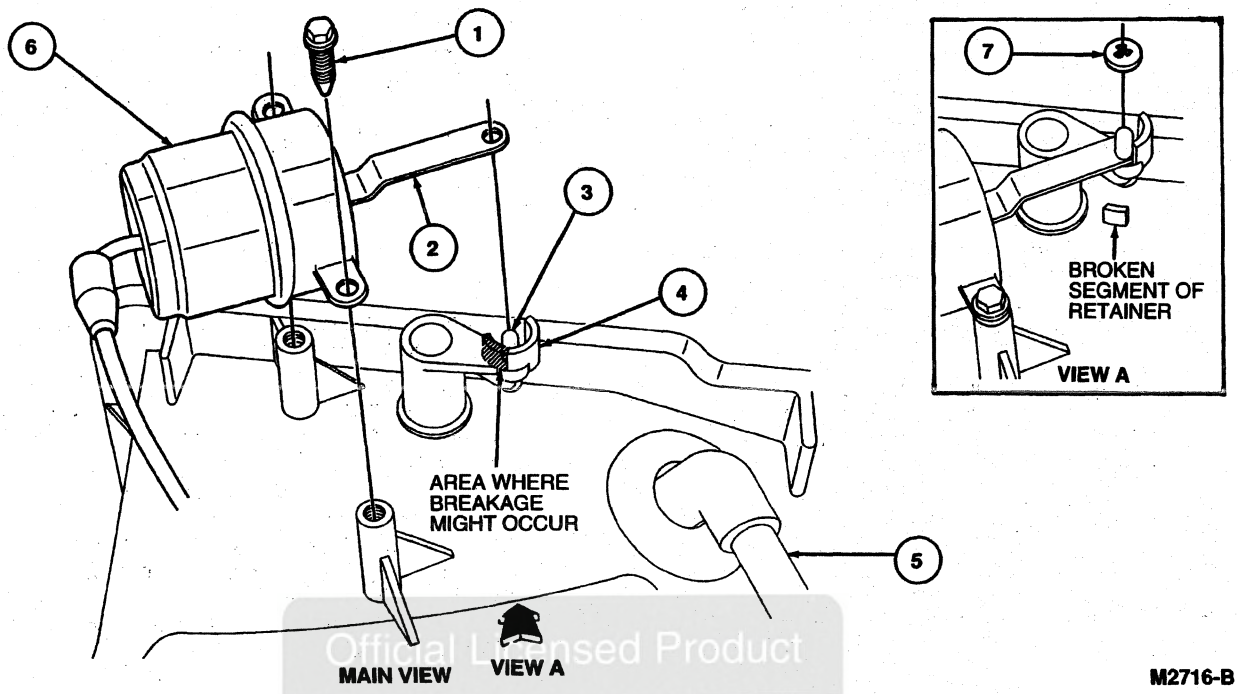

Item	Part Number	Description
1	389915-S2	Screw (2 Req'd)
2	—	Motor Arm (Part of 18A318)
3	—	Peg (Part of Cam)
4	—	Retainer (Part of Cam)

Item	Part Number	Description
5	—	Electrical Wiring Harness (Part of 14401)
6	18A318	Vacuum Control Motor
7	383358-S	Spring Nut

(Continued)

4. Look through opening in the case and use a screwdriver to depress the snap-on door crank while pulling up on door shaft to release the crank from the door.

REMOVAL AND INSTALLATION (Continued)

Outside Air Door and Crank

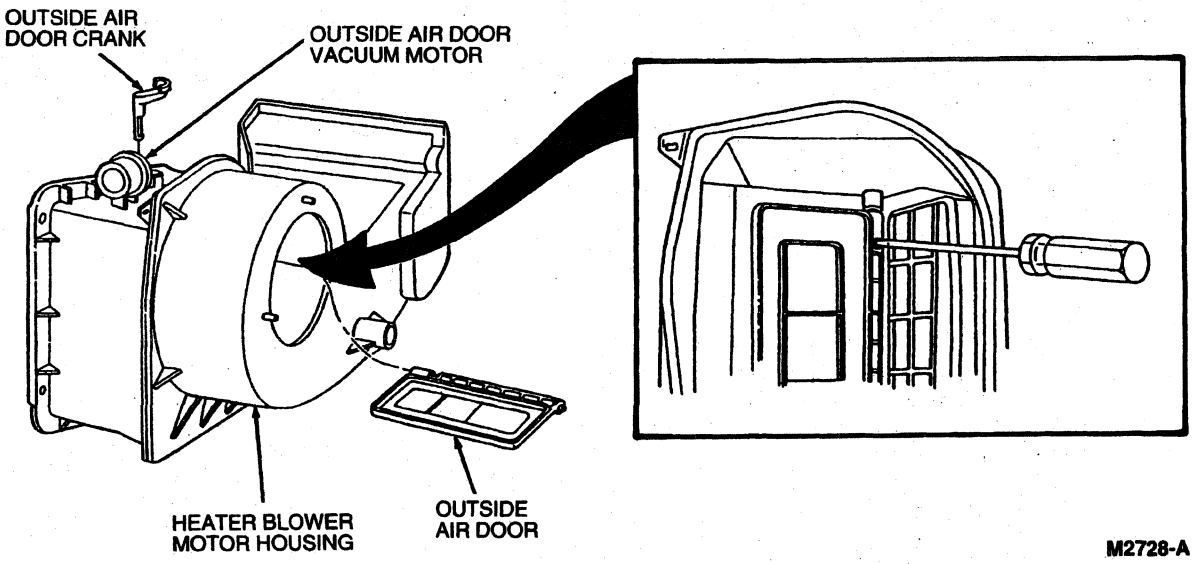

5. Remove the door through the opening.

Installation

1. Insert the door through the opening. Seat the bottom door pivot first, then swing the top door pivot into place.
2. Hold the door in the full outside air position (swing to full in-board position) and snap in crank.
3. Align the hole in the arm with peg in the door crank.
4. NOTE: If the flange has been broken off, install the spring nut as described in Step 3 of the removal procedure.

   Slide the arm downward over the peg and along the inner surface of the retaining flange with the arm seats the base of the flange surface, and install retaining screws.
5. Install blower motor in the housing and connect the electrical harness.

Vacuum Control Motors

The vacuum control motors (18A318) for the panel/defrost and MIX damper doors are attached to the underside of the heater air plenum chamber (18471). The previous illustration titled Outside Air/Recirculated Air Door Vacuum Motor shows these vacuum control motors disassembled from the heater air plenum chamber.

Windshield Defroster Door

Removal

1. Remove the vacuum hose from the vacuum control motor.
2. Remove the two screws that attach the vacuum control motor to the heater air plenum chamber.
3. Rotate the assembly so the slot in the bracket is parallel with the tee-shaped end of the door crank arm. Carefully disengage motor link from pin on crank.

Installation

1. Follow removal procedure in reverse order.
2. Verify that the system functions properly.

Heater and A/C Inlet Duct Door

Removal

1. Remove the heater outlet floor duct (18C433).
2. Disconnect the two vacuum hoses from the vacuum control motor.
3. Remove the two screws retaining the vacuum control motor and bracket assembly to the heater air plenum chamber.
4. Using a small screwdriver, depress the tang on the side of the door operating lever and pull the arm out of the lever.

Installation

1. Follow removal procedure in reverse order, sliding motor arm into door lever until locking tang engages.
2. Verify that the system functions properly.

Official Licensed Product Ford Motor Company

REMOVAL AND INSTALLATION (Continued)

Suction Accumulator/Drier

Removal

1. NOTE: Cap all open refrigerant lines and components to prevent entry of dirt and moisture into the A/C system.

   Discharge refrigerant from air conditioning system following recommended service procedures. Refer to Section 12-00. Observe all safety precautions.
2. Disconnect electrical connector from A/C cycling switch (19E561).
3. Remove A/C cycling switch by unscrewing it from suction accumulator/drier (19C836).
4. Disconnect A/C manifold and tube (19D734) from suction accumulator/drier. Use two wrenches to prevent component damage. Cap A/C manifold and tube to prevent entrance of dirt and moisture.
5. Loosen fitting connecting suction accumulator/drier to A/C evaporator core (19860). Use two wrenches to prevent component damage.
6. Remove two screws attaching suction accumulator/drier strap to A/C evaporator housing (19850) and one screw attaching clip to inlet tube.
7. Drain the refrigerant oil from the suction accumulator/drier. Refer to Section 12-00.

Installation

1. Add oil to the new suction accumulator/drier prior to installation. Refer to Section 12-00.
2. Using a new O-ring lubricated with clean refrigerant oil, connect suction accumulator/drier to tube. Tighten connection finger-tight.
3. Position A/C accumulator bracket (19D607) on suction accumulator/drier and attach to A/C evaporator case (19897) and clip to inlet tube. Align strap and clip with mounting bracket and install three attaching screws. Loosen connection of suction accumulator/drier to A/C evaporator core if necessary to reposition suction accumulator/drier to install A/C accumulator bracket attaching screws.
4. Tighten fitting to 34-44 N·m (25-32 lb-ft) using two wrenches.
5. Using a new O-ring lubricated with clean refrigerant oil, connect A/C manifold and tube to suction accumulator/drier. Use two wrenches and tighten connection to 34-44 N·m (25-32 lb-ft).
6. Install a new O-ring lubricated with clean refrigerant oil on nipple of suction accumulator/drier.
7. Install A/C cycling switch. Tighten A/C cycling switch to 1-5 N·m (13-47 lb-in).
8. Connect electrical connector to A/C cycling switch.
9. Leak test, evacuate and charge system following the recommended service procedures. Refer to Section 12-00. Observe all safety precautions.
10. Check system for proper operation.

A/C Cycling Switch

Removal

1. Disconnect wire connector from A/C cycling switch (19E561).
2. NOTE: Do not vent refrigerant charge.

   Unscrew A/C cycling switch from suction accumulator/drier (19C836).

Installation

1. Follow removal procedure in reverse order.
2. Use new O-ring lubricated with clean refrigerant oil. Tighten A/C cycling switch to 1-5 N·m (13-47 lb-in).
3. Check system for proper operation.

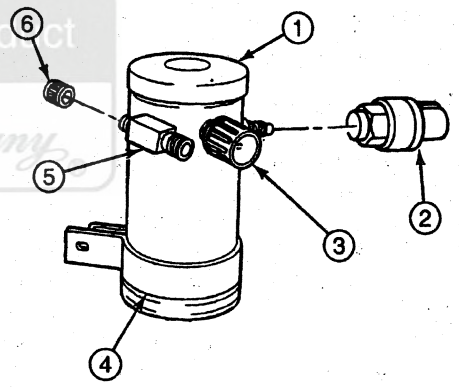

DM0300-A

Item	Part Number	Description
1	19C836	Suction Accumulator/Drier
2	19E561	A/C Cycling Switch
3	19867	Evaporator to Compressor Suction Line
4	19D607	A/C Accumulator Bracket
5	—	Evaporator to Accumulator Inlet Fitting (Part of 19C808)
6	19D702	A/C Charging Valve Cap

A/C Evaporator Core Orifice

The A/C evaporator core orifice (19D990) is constructed with a plastic body, two screens and a small brass tube down the center of the A/C evaporator core orifice. Two O-rings are around the A/C evaporator core orifice to seal against leakage.

REMOVAL AND INSTALLATION (Continued)

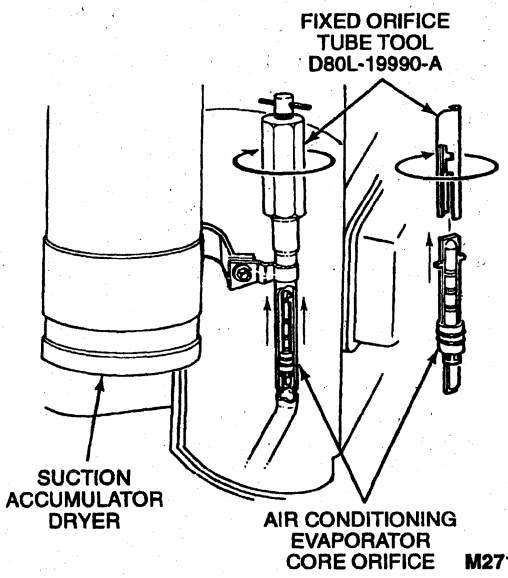

SPECIAL SERVICE TOOL(S) REQUIRED

Description	Tool Number
Spring Lock Coupling Disconnect Tool Set	T84L-19623-B

CAUTION: DO NOT attempt to remove the A/C evaporator core orifice with pliers or to twist or rotate the A/C evaporator core orifice in the tube. To do so will break the A/C evaporator core orifice in the tube. Use only the recommended tool following the recommended service procedures.

Removal

1. NOTE: Cap all open refrigerant lines and components to prevent entry of dirt and moisture into the A/C system.

   Discharge refrigerant from air conditioning system following recommended service procedures. Refer to Section 12-00. Observe all safety precautions.
2. Disconnect condenser to evaporator tube (19835) from A/C evaporator core (19860) using Spring Lock Coupling Disconnect Tool Set T84L-19623-B. Cap condenser to evaporator tube to prevent entrance of dirt and excessive moisture.
3. Pour a small amount of clean refrigerant oil into inlet tube to lubricate tube and O-rings during removal of A/C evaporator core orifice from tube.
4. Engage the Fixed Orifice Tube Tool D80L-19990-A or equivalent with the two tangs on the A/C evaporator core orifice.
5. **CAUTION: Do not twist or rotate the A/C evaporator core orifice in the tube. It can break off in the tube.**

   Hold T-handle of Fixed Orifice Tube Tool D80L-19990-A or equivalent to keep it from turning, and run nut on tool down against tube until A/C evaporator core orifice is pulled from tube.
6. If A/C evaporator core orifice breaks in tube, it must be removed from tube with Broken Orifice Tube Extractor D80L-19990-B or equivalent.
7. To remove a A/C evaporator core orifice, insert screw end of Broken Orifice Tube Extractor D80L-19990-B or equivalent into tube. Thread screw end of tool into brass tube in center of A/C evaporator core orifice. Pull A/C evaporator core orifice from tube.
8. If only brass center tube is removed during above step, insert screw end of the Broken Orifice Tube Extractor D80L-19990-B or equivalent into tube and screw end of tool into A/C evaporator core orifice. Pull fixed A/C evaporator core orifice from tube.

Installation

1. Lubricate O-rings on A/C evaporator core orifice liberally with clean refrigerant oil.
2. Place A/C evaporator core orifice in Fixed Orifice Tube Tool D80L-19990-A or equivalent and insert A/C evaporator core orifice into tube until orifice is seated at stop.
3. Remove Fixed Orifice Tube Tool D80L-19990-A or equivalent from A/C evaporator core orifice.
4. Using a new O-ring lubricated with clean refrigerant oil, connect condenser to evaporator tube to tube.
5. Leak test, evacuate and charge system following recommended service procedures. Refer to Section 12-00. Observe all safety precautions.
6. Check system for proper operation.

A/C Pressure Cut-Off Switch

Removal

1. Discharge A/C system. Refer to Section 12-00. Observe all safety precautions.
2. Disconnect electrical connector from A/C pressure cut-off switch (19D594) located on the A/C manifold and tube (19D734).
3. Remove A/C pressure cut-off switch.

Installation

1. Wrap threaded end of new A/C pressure cut-off switch with Teflon® tape thread wrap. Do not allow thread wrap to cover bottom of A/C pressure cut-off switch.
2. Install A/C pressure cut-off switch in A/C manifold and tube. Tighten to 7-13 N·m (62-115 lb-in).

REMOVAL AND INSTALLATION (Continued)

3. Connect electrical connector to A/C pressure cut-off switch.
4. Evacuate, leak test and recharge A/C system. Refer to Section 12-00. Observe all safety precautions.
5. Test system for proper operation.

A/C Condenser Core

SPECIAL SERVICE TOOL(S) REQUIRED

Description	Tool Number
Spring Lock Coupling Disconnect Tool Set	T84L-19623-B

Removal

1. NOTE: Cap all open refrigerant lines and components to prevent entry of dirt and moisture into the A/C system.

   Recover refrigerant from system following recommended service procedures. Refer to Section 12-00. Observe all safety precautions.
2. Disconnect condenser to evaporator tube (19835) from A/C condenser core (19712). Cap condenser to evaporator tube to prevent entrance of dirt and moisture.
3. Disconnect A/C manifold and tube (19D734) from A/C condenser core.
4. Partially drain radiator (8005) and disconnect upper radiator hose from radiator.
5. Working under vehicle, remove two screws attaching two lower mounting brackets to front of lower radiator support.
6. Remove bolts from radiator upper retaining brackets.
7. Tilt top of radiator rearward and remove two screws attaching two condenser upper mounting brackets to rear side of radiator support.
8. Lift A/C condenser core from vehicle.

Official Licensed Product
Ford Motor Company

REMOVAL AND INSTALLATION (Continued)

A/C Condenser Core

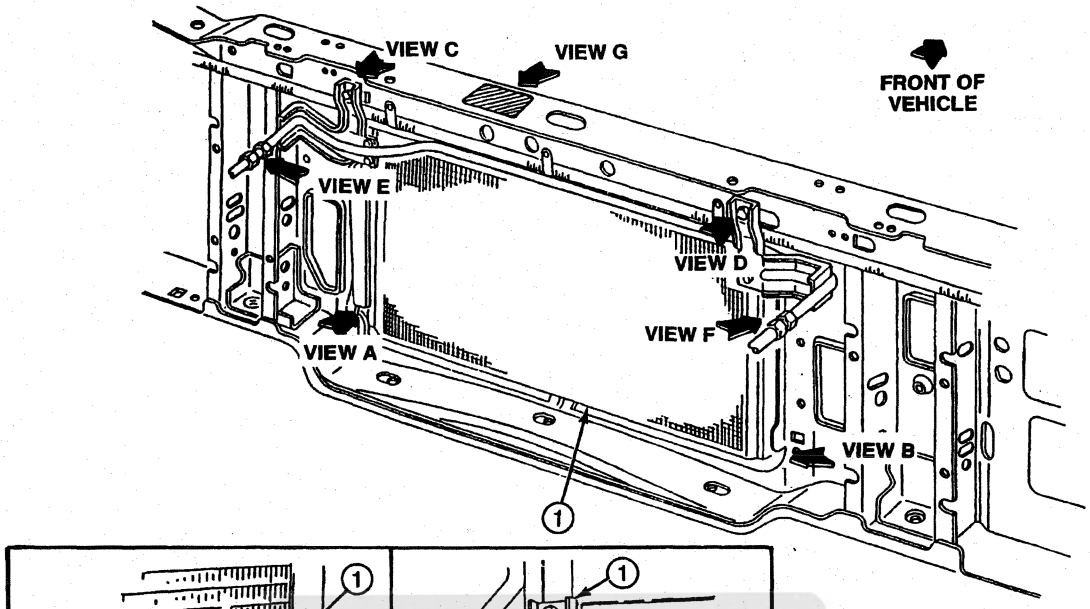

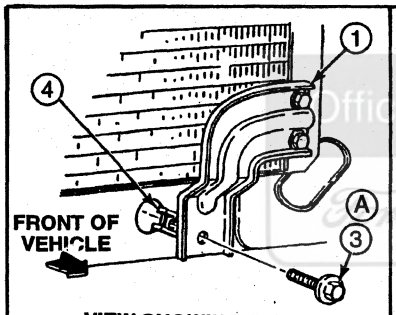

VIEW SHOWING FRONT LEFT LOWER BRACKET
VIEW A

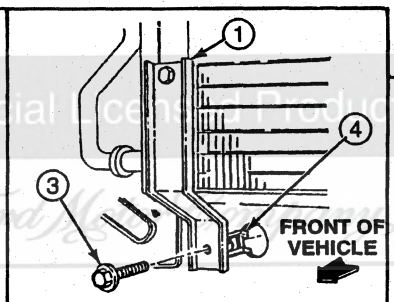

VIEW SHOWING FRONT RIGHT LOWER BRACKET
VIEW B

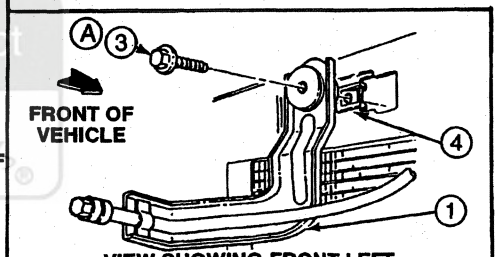

VIEW SHOWING FRONT LEFT UPPER BRACKET
VIEW C

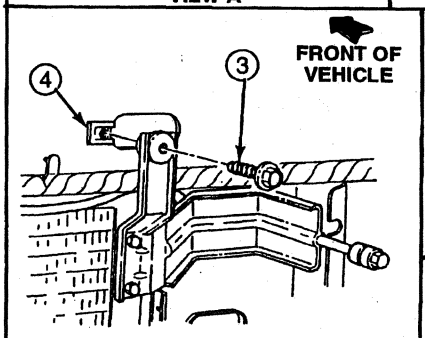

VIEW SHOWING FRONT RIGHT UPPER BRACKET
VIEW D

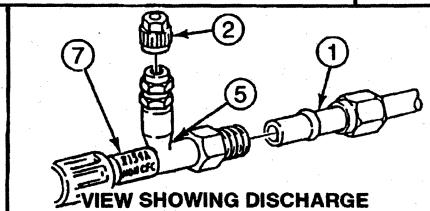

VIEW SHOWING DISCHARGE HOSE CONNECTION
VIEW E

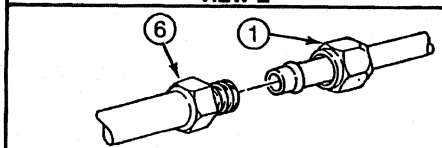

VIEW SHOWING LIQUID HOSE CONNECTION
VIEW F

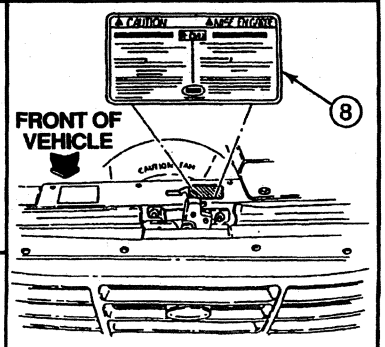

VIEW SHOWING PLACEMENT OF LABEL
VIEW G

M5407-A

Item	Part Number	Description
1	19712	A/C Condenser Core
2	19D702	A/C Charging Valve Cap
3	N606691-S2	Screw and Washer (4 Req'd Gas, 2 Req'd Diesel)

(Continued)

Item	Part Number	Description
4	N623333-S100	U-Nut (4 Req'd)
5	19D734	A/C Manifold and Tube
6	19835	Condenser to Evaporator Tube

(Continued)

REMOVAL AND INSTALLATION (Continued)

Item	Part Number	Description
7	—	Refrigerant Identification Tag (Part of 19D734)

(Continued)

Item	Part Number	Description
8	19A688	Refrigerant Charge Information Tag
A	—	Tighten to 14-19 N·m (11-14 Lb-Ft)

Installation

1. Position A/C condenser core to vehicle with lower mounting brackets on front side of radiator support and upper brackets on rear side.
2. Install four screws attaching four mounting brackets to radiator support. Tighten screws to 14-19 N·m (11-14 lb-ft).
3. Move radiator into correct installed position and install bolts to upper retaining brackets.
4. Connect upper radiator hose to radiator and fill cooling system to specified level. Refer to Section 03-03 in the Powertrain, Drivetrain Manual.
5. Using a new O-ring lubricated with clean refrigerant oil, connect A/C manifold and tube discharge line to A/C condenser core. Tighten connection to 7-13 N·m (62-115 lb-in).
6. Connect condenser to evaporator tube to A/C condenser core using a new O-ring lubricated with clean refrigerant oil. Tighten connection to 21-27 N·m (15-20 lb-ft).
7. Leak test, evacuate and charge system following recommended service procedures. Refer to Section 12-00. Observe all safety precautions.
8. Check system for proper operation.
9. Refer to Evaporator Core and/or A/C Condenser Core on Vehicle Leak Test in Section 12-00.

Refrigerant Lines

Suction Lines

SPECIAL SERVICE TOOL(S) REQUIRED

Description	Tool Number
Spring Lock Coupling Disconnect Tool Set	T84L-19623-B

Removal

1. NOTE: Plug or cap all open refrigerant lines and components to prevent entry of dirt and moisture into the A/C system. Pay particular attention to line routings to aid in installation.

   Disconnect battery ground cable (14301).
2. Discharge A/C system. Refer to Section 12-00. Observe all safety precautions.
3. Disconnect electrical connector from A/C pressure cut-off switch (19D594).
4. Disconnect A/C manifold and tube (19D734) at suction accumulator/drier (19C836).
5. Disconnect A/C manifold and tube discharge line at A/C condenser core (19712).
6. Remove bolt retaining A/C manifold and tube to A/C compressor (19703).
7. Remove entire refrigerant line assembly from vehicle.

Installation

1. Route replacement refrigerant lines in same manner as those removed.
2. Remove any caps or plugs from connections to suction accumulator/drier and A/C manifold and tube suction line at suction accumulator/drier.
3. Lubricate both ends of refrigerant line connection using clean refrigerant oil.
4. Lubricate and install new green O-rings using clean refrigerant oil.
5. Connect A/C manifold and tube suction line to suction accumulator/drier. Finger-tighten.
6. Remove any caps or plugs at connection to A/C manifold and tube suction line and A/C condenser core.
7. Lubricate A/C line connections at A/C condenser core and A/C manifold and tube discharge line.
8. Lubricate and install new green O-rings using clean refrigerant oil.
9. Connect A/C manifold and tube discharge line to A/C condenser core. Finger-tighten only.
10. Remove any caps or plugs from A/C manifold and tube at A/C compressor connection.
11. Lubricate and install new green O-rings in A/C manifold and tube using clean refrigerant oil.
12. Install A/C manifold and tube to A/C compressor using bolt from removal procedure. Tighten to 18 N·m (13 lb-ft).
13. Remove A/C pressure cut-off switch from old A/C manifold and tube.
14. Clean threaded portion of A/C pressure cut-off switch, wrap threads with teflon thread wrap tape and install in new A/C manifold and tube. Tighten to 7-13 N·m (62-115 lb-in).
15. Remove A/C compressor pressure relief valve (19D644) from old A/C manifold and tube and install in new A/C manifold and tube.

REMOVAL AND INSTALLATION (Continued)

16. Connect electrical connector to A/C pressure cut-off switch.
17. Tighten connection at suction accumulator/drier to A/C manifold and tube suction line to 41-47 N·m (30-35 lb-ft). Use a wrench on each side of connection.
18. Tighten connection at A/C manifold and tube discharge line to A/C condenser core to 21-27 N·m (15-20 lb-ft). Use a wrench on each side of connection.
19. NOTE: When the battery (10655) has been disconnected and reconnected, some abnormal drive symptoms may occur while the powertrain control module (PCM)(12A650) relearns its adaptive strategy. The vehicle may need to be driven 16 km (10 miles) or more to learn the strategy.

    Connect the battery ground cable.
20. Evacuate, leak test and charge the A/C system. Refer to Section 12-00. Observe all safety precautions.
21. The addition of refrigerant oil is not necessary when installing a new refrigerant line unless the line has been replaced due to bursting while containing a refrigerant charge.

Liquid Lines

SPECIAL SERVICE TOOL(S) REQUIRED

Description	Tool Number
Spring Lock Coupling Disconnect Tool Set	T84L-19623-B

Removal

1. NOTE: Cap all open refrigerant lines and components to prevent entry of dirt and moisture.

   Disconnect battery ground cable.
2. Discharge A/C system. Refer to Section 12-00. Observe all safety precautions.
3. Disconnect condenser to evaporator tube (19835) at A/C condenser core. Use a wrench on each side of the connection.
4. Disconnect condenser to evaporator tube at A/C evaporator core (19860) using Spring Lock Coupling Disconnect Tool Set T84L-19623-B. Refer to Spring Lock Coupling in the Removal and Installation portion of this section.
5. Remove condenser to evaporator tube from vehicle. Pay particular attention to line routing to aid in installation.
6. Cap or plug A/C condenser core open fitting to prevent entry of dirt or moisture.
7. Cap or plug opening to A/C evaporator core.

Installation

1. Remove shipping cap from condenser end of condenser to evaporator tube and plug or cap from A/C condenser core fitting.
2. Lubricate each end of connection using clean refrigerant oil.
3. Lubricate and install new green O-rings at line to condenser fitting.
4. Connect condenser to evaporator tube to A/C condenser core. Finger-tighten.
5. Remove shipping cap from condenser to evaporator tube at A/C evaporator core end.
6. Remove cap or plug from A/C evaporator core.
7. Lubricate both ends of refrigerant line connection using clean refrigerant oil.
8. Lubricate and install new green O-rings on refrigerant line connection.
9. Connect condenser to evaporator tube to A/C evaporator core. Refer to Spring Lock Coupling in the Removal and Installation portion of this section.
10. Tighten condenser to evaporator tube connection at A/C condenser core to 21-27 N·m (15-20 lb-ft). Use a wrench on each side of fitting.
11. NOTE: When the battery has been disconnected and reconnected, some abnormal drive symptoms may occur while the powertrain control module relearns its adaptive strategy. The vehicle may need to be driven 16 km (10 miles) or more to learn the strategy.

    Connect battery ground cable.
12. Evacuate, leak test and recharge A/C system.
13. Test system for proper operation.

Discharge Lines

For more information on the removal and installation of the A/C compressor to condenser discharge line (19972), refer to Suction Lines in the Removal and Installation portion of this section.

The following illustration is a diagram of a typical refrigerant line installation.

Ford Motor Company Licensed Product

REMOVAL AND INSTALLATION (Continued)

Air Conditioning System

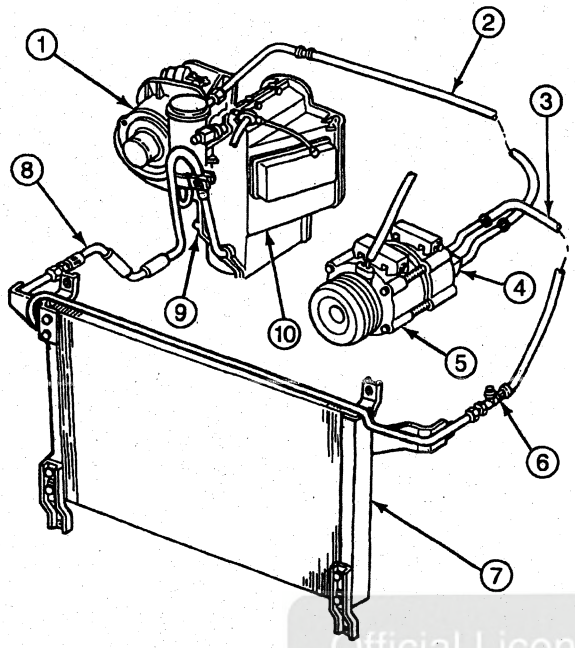

M4208-D

Item	Part Number	Description
1	18527	Blower Motor
2	—	Suction Line (Part of 19D734)
3	—	Discharge Line (Part of 19D734)

(Continued)

Item	Part Number	Description
4	19D734	A/C Manifold and Tube
5	19703	A/C Compressor
6	19E762	High-Pressure Service Valve
7	19712	A/C Condenser Core
8	19835	Condenser to Evaporator Tube
9	19C836	Suction Accumulator/Drier
10	19897	A/C Evaporator Case

Heater Water Hoses

Removal

Refer to Section 12-02 for heater hose service procedures.

1. Drain coolant from cooling system.
2. Loosen clamps and remove heater water hoses (18472) from vehicle.
3. Cut a new length of heater water hose to dimension of removed heater water hoses.

Installation

1. Route heater water hoses.
2. Connect heater water hose to fittings.
3. Fill and bleed cooling system. Refer to Section 03-03 in the Powertrain, Drivetrain Manual.
4. Check for coolant leaks and for proper operation of system.

Official Licensed Product
Ford Motor Company

REMOVAL AND INSTALLATION (Continued)

Refrigerant and Heater Line Routing, 5.8L (351 CID) MFI Engine

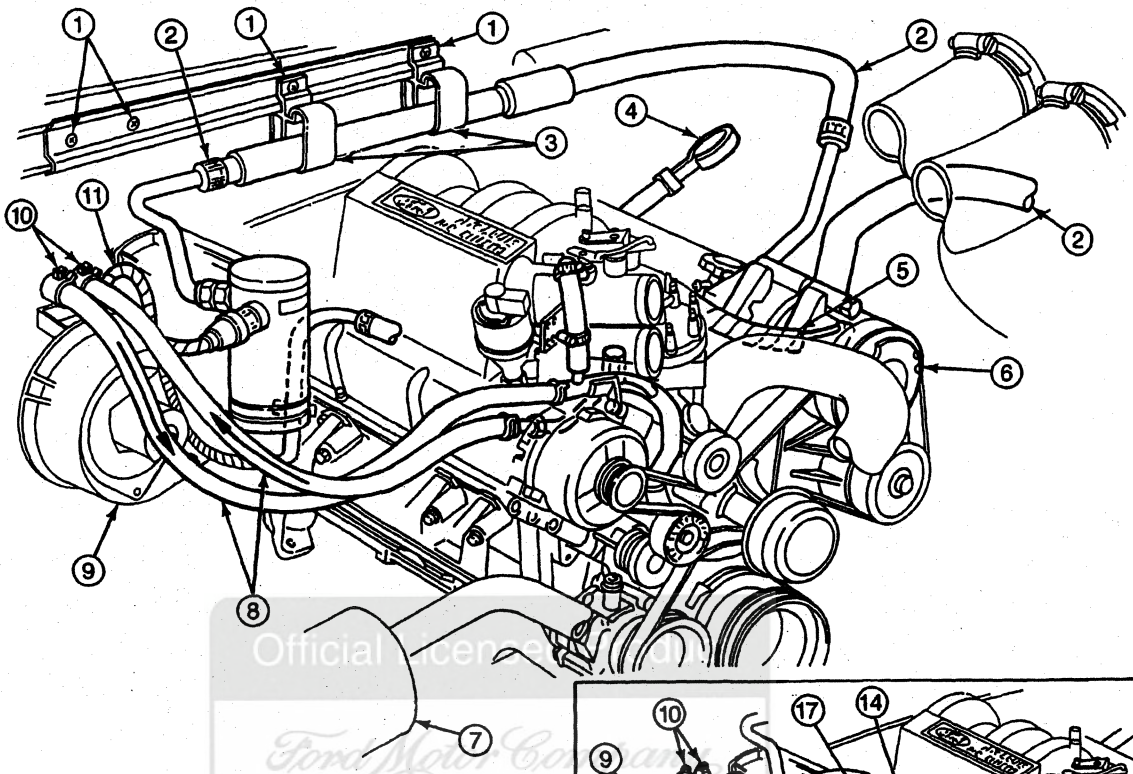

Official Licensed Product
Ford Motor Company

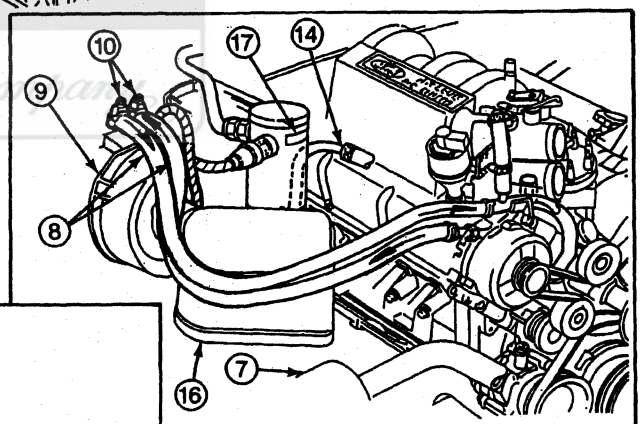

HEATER HOSE INSTALLATION FOR VEHICLES WITH MANUAL TRANSMISSION

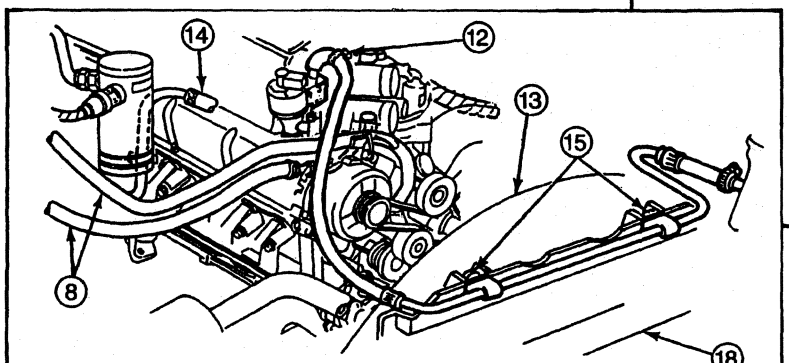

HEATER HOSE ASSEMBLY INSTALLATION FOR VEHICLES WITH E4OD TRANSMISSION

DM0301-A

Item	Part Number	Description
1	—	Existing Screw (Part of Cowl Top Outer Panel)
2	19D734	A/C Manifold and Tube

(Continued)

Item	Part Number	Description
3	19B632	A/C Accumulator Tube Support Clip
4	—	Dipstick (Part of 6007)
5	9D930	Wiring Assy

(Continued)

REMOVAL AND INSTALLATION (Continued)

Item	Part Number	Description
6	19703	A/C Compressor
7	19618	Thermactor System
8	18472	Heater Water Hose
9	19850	A/C Evaporator Housing
10	19B679	A/C Hose Clamp
11	—	Wiring (Part of 14401)
12	376240-S100	Hose Clamp (2 Req'd)
13	8146	Fan Shroud

(Continued)

Item	Part Number	Description
14	19835	Condenser to Evaporator Tube
15	—	U-Nuts (Part of 8146)
16	19A566	A/C Vacuum Reservoir Tank and Bracket
17	—	Tag — A/C Service Instructions (Part of 19C808)
18	8005	Radiator

Refrigerant and Heater Line Routing, 7.3L (444 CID) Diesel Engine

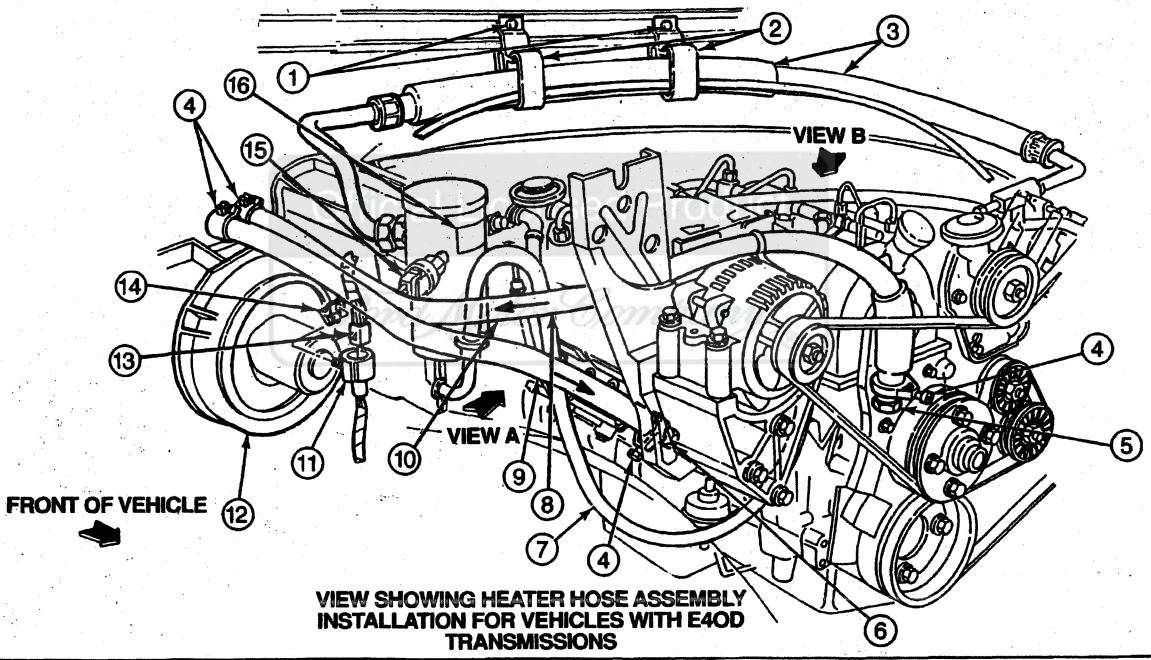

VIEW SHOWING HEATER HOSE ASSEMBLY INSTALLATION FOR VEHICLES WITH E4OD TRANSMISSIONS

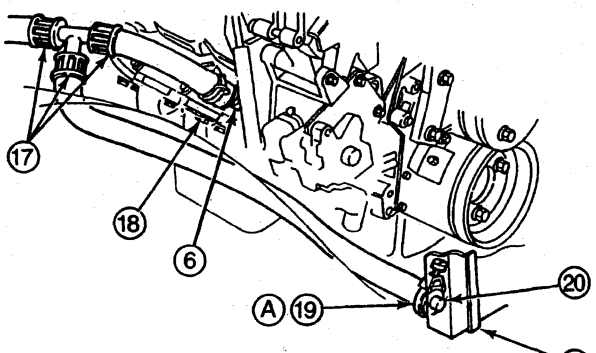

VIEW SHOWING HOSE ASSEMBLY INSTALLATION VIEW VEHICLES WITH E4OD AUTO OR MANUAL TRANSMISSIONS VIEW A

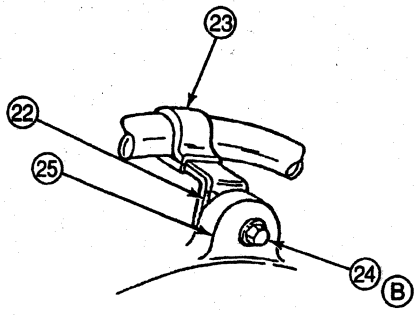

INSTALLATION OF BRACKET ASSEMBLY FOR ALL VEHICLES EQUIPPED WITH AMBULANCE PACKAGE VIEW B

M4375-E

REMOVAL AND INSTALLATION (Continued)

Item	Part Number	Description
1	—	Existing Screw (Part of Cowl Panel)
2	19B632	A/C Accumulator Tube Support Clip
3	19D734	A/C Manifold and Tube
4	19B679	A/C Hose Clamp
5	389766-8287	Heater Hose Connection
6	18599	Hot Water Heater Elbow Connection
7	19835	Condenser to Evaporator Tube
8	18472	Heater Water Hose
9	18472	Heater Water Hose
10	18472	Heater Water Hose
11	—	Locator (Part of 14401)
12	19850	A/C Evaporator Housing
13	—	Wiring (Part of 14401)

(Continued)

Item	Part Number	Description
14	—	Existing Retainer (Part of 19850)
15	19E561	A/C Cycling Switch
16	—	A/C Service Instructions Tag (Part of 19C808)
17	—	Junction (Part of 18C266)
18	—	Plate (Part of 6007)
19	389772-S100	Clamp
20	—	Connector (Part of 8005)
21	8005	Radiator
22	N62332	U-Nut
23	180331	Bracket Assy
24	N606677-S2	Bolt
25	—	Ear (Part of 10346)
A	—	Tighten to 1.4-2.0 N·m (12-18 Lb-In)
B	—	Tighten to 7-11 N·m (62-97 Lb-In)

Official Licensed Product
Ford Motor Company

REMOVAL AND INSTALLATION (Continued)

Refrigerant and Heater Line Routing, 7.5L (460 CID) MFI Engine

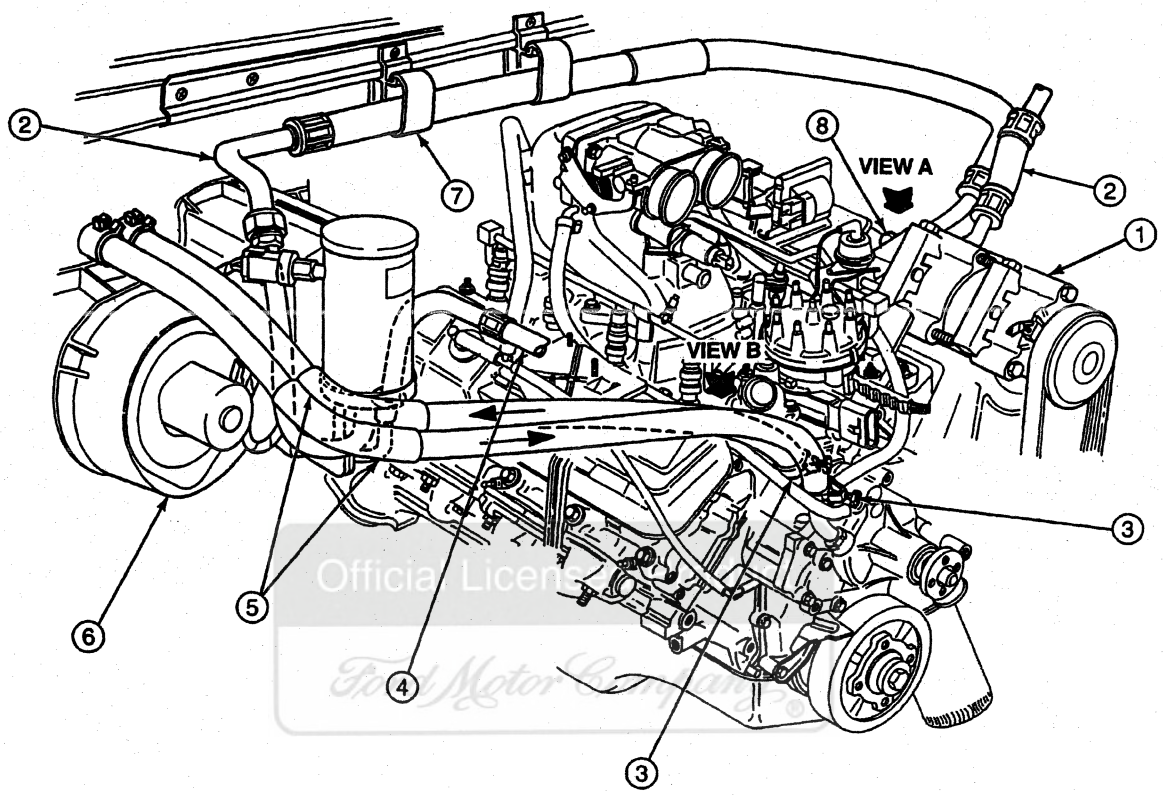

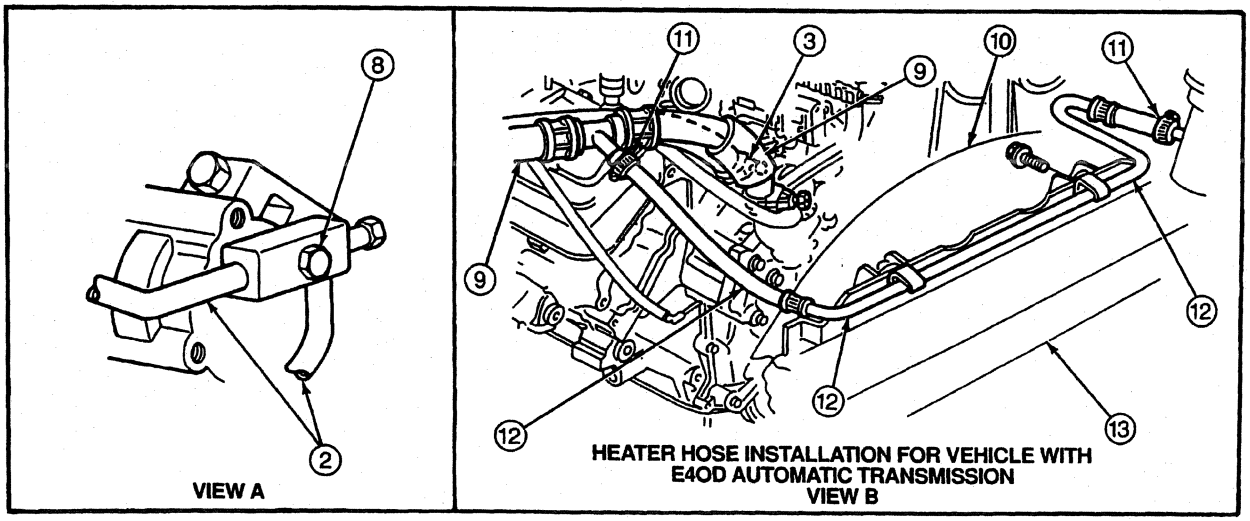

M5039-A

Item	Part Number	Description
1	19703	A/C Compressor
2	19D734	A/C Manifold and Tube

(Continued)

Item	Part Number	Description
3	390761-S100	Clamp (4 Req'd)
4	19835	Condenser to Evaporator Tube

(Continued)

REMOVAL AND INSTALLATION (Continued)

Item	Part Number	Description
5	18472	Heater Water Hose (for Vehicles with Manual Transmission) (2 Req'd)
6	19930	A/C Blower Housing
7	19B632	A/C Accumulator Tube Support Clip (2 Req'd)
8	N805334-S2	Bolt

(Continued)

Item	Part Number	Description
9	18472	Heater Water Hose (for Vehicles with E4OD Transmission)
10	8146	Fan Shroud
11	376240-S100	Hose Clamp Assy (2 Req'd)
12	8548	Water Bypass Tube
13	8005	Radiator

A/C Compressor

Removal

1. **CAUTION: Do not open the high-pressure valve while the engine is running.**

   NOTE: Cap all open refrigerant lines and components to prevent entry of dirt and moisture.

   Disconnect battery ground cable (14301).
2. Remove drive belt (8620).
3. Disconnect A/C compressor electrical connector.
4. Recover refrigerant from system following the recommended service procedure. Observe all safety precautions. Refer to Section 12-00.
5. Disconnect the refrigerant lines and the bolt from the A/C compressor (19703).
6. Remove A/C compressor bolts (4) and the A/C compressor mounting bracket (2882).

Installation

1. Install the A/C compressor, A/C compressor mounting bracket and compressor bolts (4). Tighten to 23-31 N·m (17-23 lb-ft).
2. Connect A/C compressor electrical connector.
3. Install drive belt.
4. NOTE: When the battery (10655) has been disconnected and reconnected, some abnormal drive symptoms may occur while the powertrain control module (PCM)(12A650) relearns its adaptive strategy. The vehicle may need to be driven 16 km (10 miles) or more to relearn the strategy.

   Connect battery ground cable.
5. Lubricate O-rings with clean refrigerant oil. Connect the refrigerant lines and bolt to the A/C compressor mounting bracket.

Official Licensed Product Ford Motor Company

REMOVAL AND INSTALLATION (Continued)

Compressor Installation, 5.8L MFI Engine

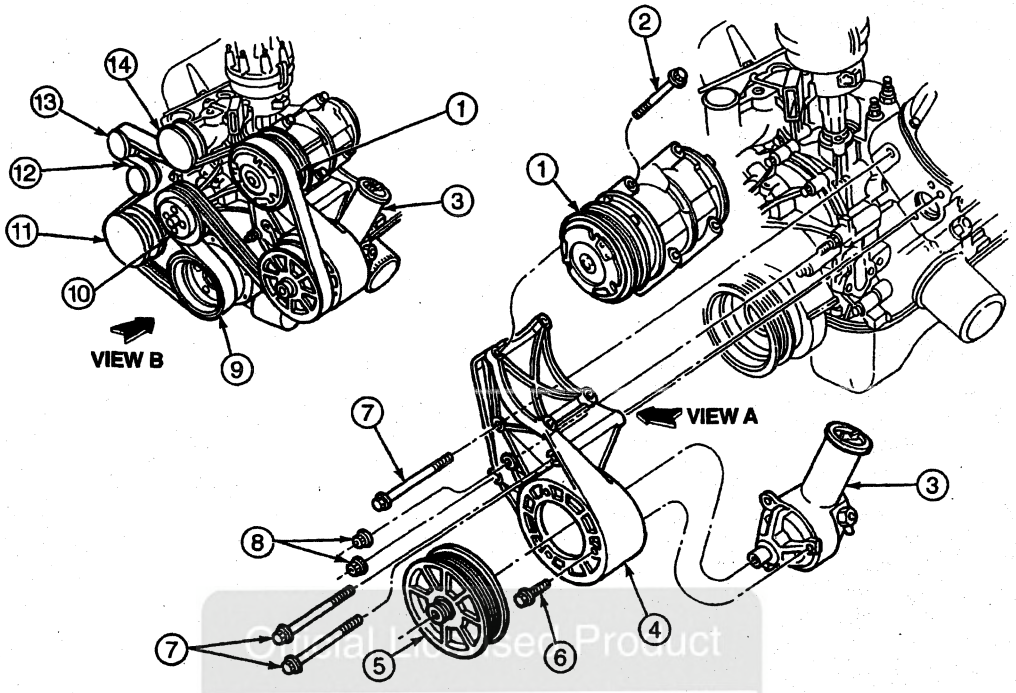

A/C COMPRESSOR OR IDLER PULLEY ASSEMBLY AND P/S PUMP

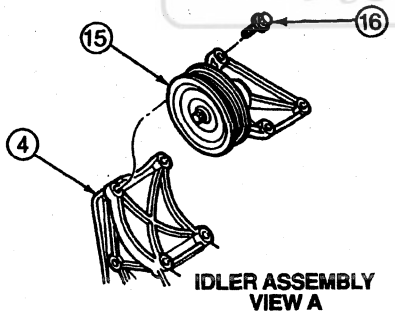

IDLER ASSEMBLY VIEW A

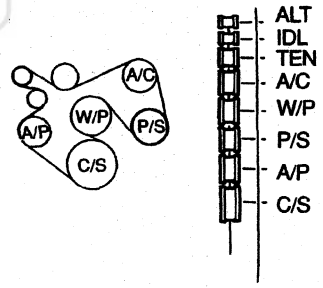

VIEW B

M4125-C

Item	Part Number	Description
1	19703	A/C Compressor
2	N606572-S2	Bolt (4 Req'd)
3	3A674	Power Steering Pump
4	3C511	Power Steering Pump Support Bracket
5	3A733	Power Steering Pulley Assy
6	N800199-S8M	Screw (3 Req'd)
7	56576-S2	Bolt (3 Req'd)
8	382802-S2	Nut (2 Req'd)

(Continued)

Item	Part Number	Description
9	6312	Crankshaft Pulley
10	8509	Water Pump Pulley
11	9B447	Secondary Air Injection Pump Pulley
12	8620	Drive Belt
13	10344	Generator Pulley
14	6B209	Drive Belt Tensioner
15	19A216	A/C Drive Belt Idler Assy
16	N605803-S2	Bolt (3 Req'd)

REMOVAL AND INSTALLATION (Continued)

Compressor Installation, 7.3L Diesel Engine

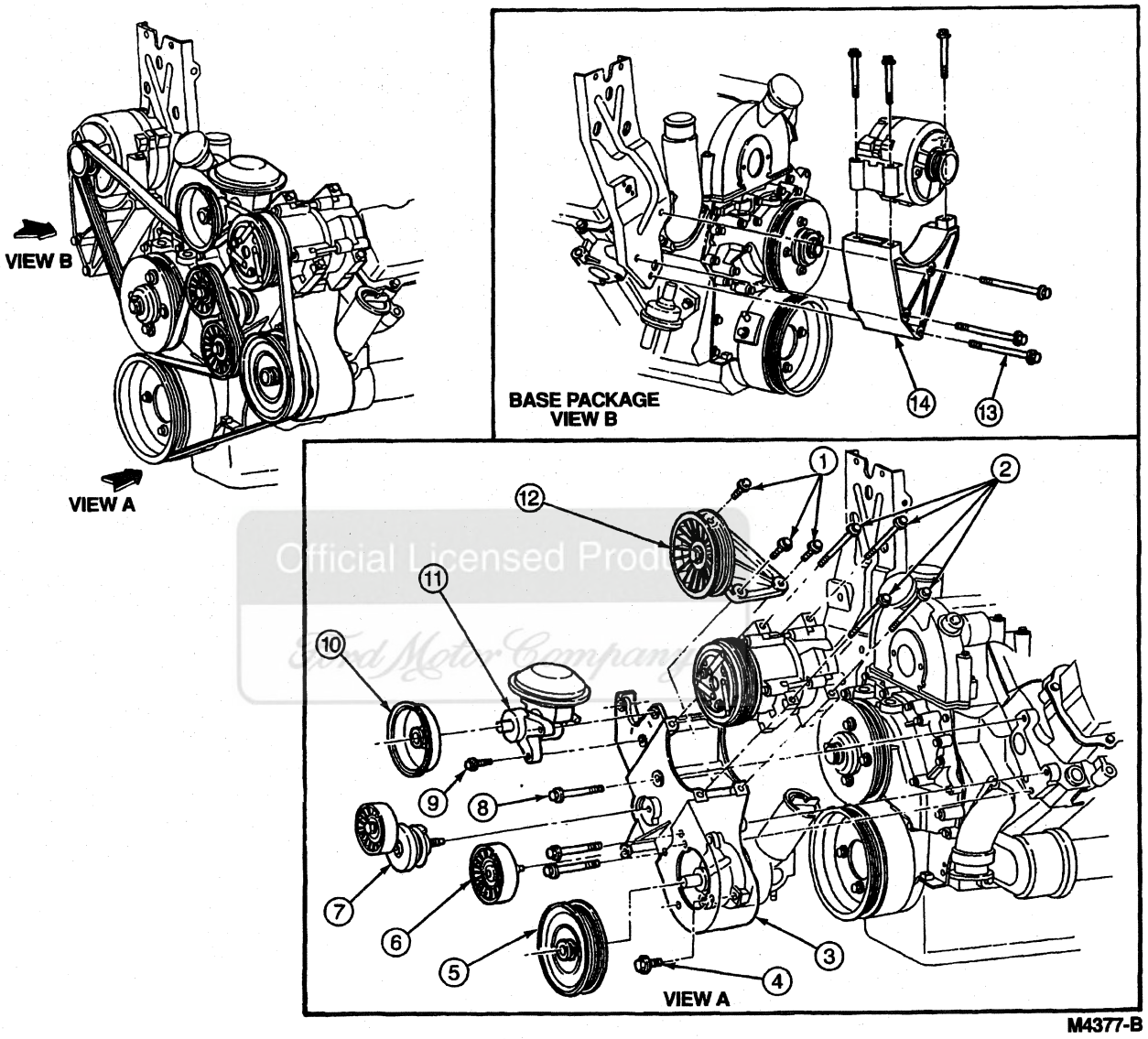

Official Licensed Product
Ford Motor Company

Item	Part Number	Description
1	N605790-S2	Bolt, M8 x 40
2	N806202-S2	Bolt, M8 x 120
3	19E708	Bracket — Power Steering and A/C and Vacuum Pump
4	N800199-S810	Screw, M10 x 1.5 x 33 Hex
5	3D673	Power Steering Pulley
6	19A216	Idler Pulley
7	6B209	Belt Tensioner

(Continued)

Item	Part Number	Description
8	389706-S2	Screw, 3/8-16 x 6.50 Hex
9	N605908-S2	Bolt, M8-1.25 x 35 Hex
10	2L487	Vacuum Pump Pulley
11	2A451	Vacuum Pump
12	19A216	Idler Assy
13	389706-S2	Screw, 3/8-16 x 5.50 Hex
14	10039	Generator Bracket

REMOVAL AND INSTALLATION (Continued)

Compressor Installation, 7.5L MFI Engine

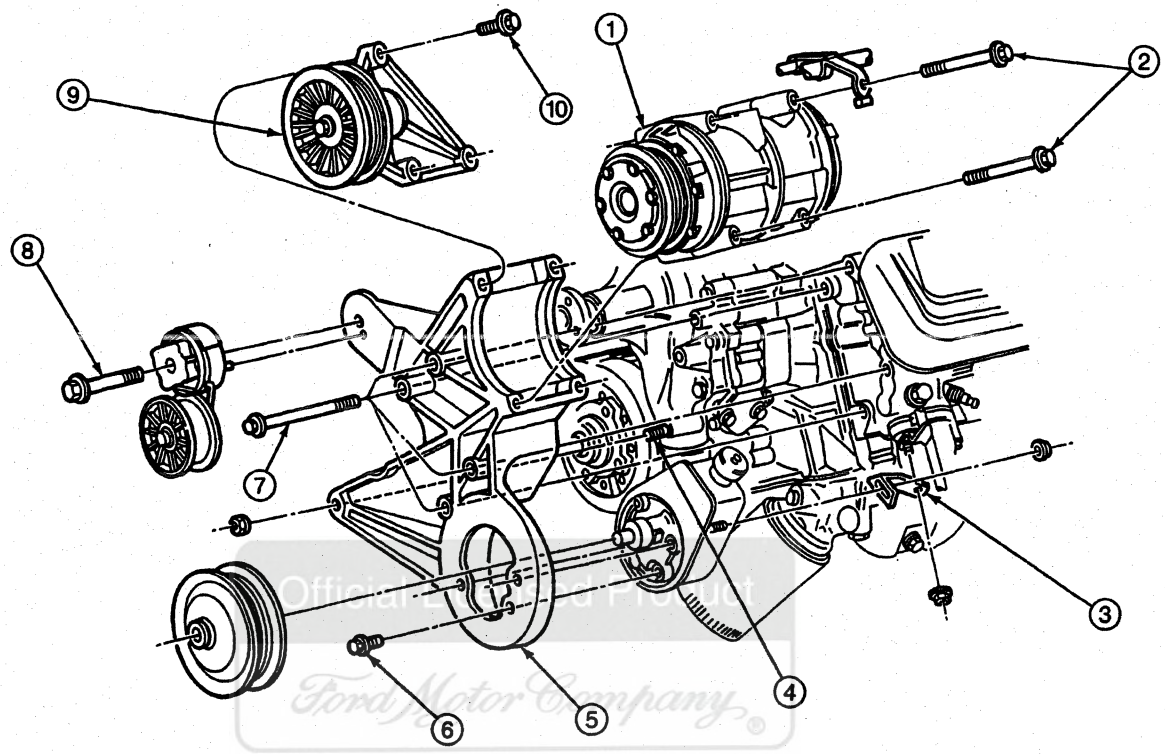

Official Licensed Product
Ford Motor Company

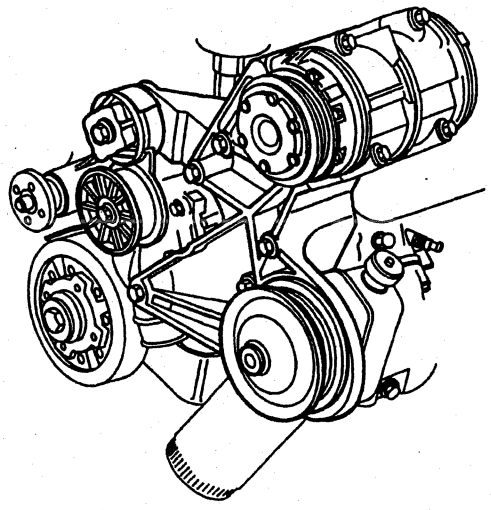

A/C COMPRESSOR
P/S PUMP

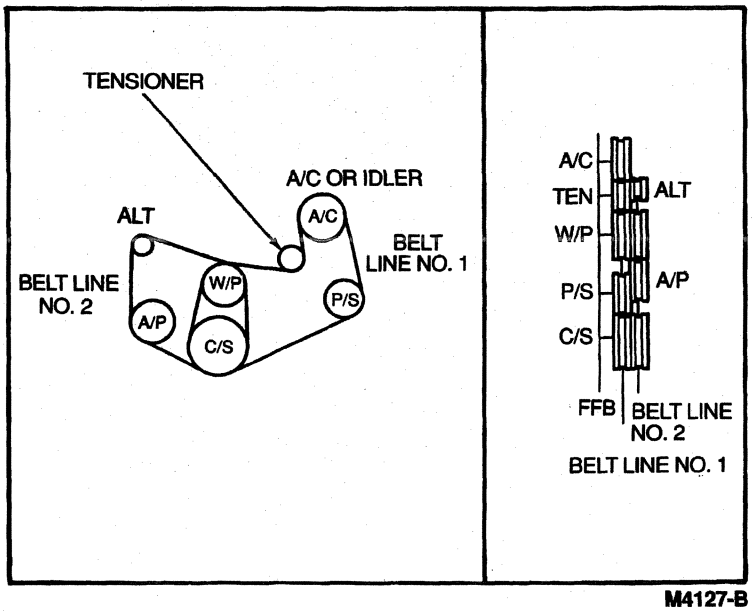

M4127-B

Item	Part Number	Description
1	19703	A/C Compressor
2	N906020-S2	Bolt

(Continued)

Item	Part Number	Description
3	—	Bracket (Part of 2882)
4	—	Stud (Part of 6007)

(Continued)

REMOVAL AND INSTALLATION (Continued)

Item	Part Number	Description
5	19E708	A/C Compressor and Power Steering Pump Mounting Bracket
6	N800199-S8M	Screw

(Continued)

Item	Part Number	Description
7	56192-S2	Bolt
8	N56192-S2	Bolt
9	6B209	Drive Belt Tensioner
10	N605790-S2	Bolt (3 Req'd)

A/C System Filtering

CAUTION: Follow all refrigerant system safety and service precautions. Refer to Section 12-00.

An A/C service kit has been released to provide the necessary equipment and information to perform the new, mandatory A/C system filtering procedure. The filter kit with the service part number suffix A is to be used on vehicles that have a nylon lined A/C manifold and tube (19D734) suction line between the suction accumulator/drier (19C836) and the A/C compressor (19703).

1. To determine if the A/C compressor has failed and must be replaced, remove the A/C evaporator core orifice (19D990) and condenser to evaporator tube (19835), if necessary. Look for a dirty A/C evaporator core orifice or a condenser to evaporator tube containing black refrigerant oil and particles.
2. NOTE: Cap all open refrigerant lines and components to prevent entry of dirt and moisture.

   Remove the damaged A/C compressor and drain the oil into a calibrated container.
3. NOTE: The proper amount of refrigerant oil must be added to the new A/C compressor before it can be installed. The procedure for the FS-10 is given.

   A new FS-10 service replacement A/C compressor contains no refrigerant oil. If the amount of oil drained from the removed A/C compressor is between 85 and 142 ml (3-5 oz.), pour the same amount plus 1 ounce of clean oil into the new A/C compressor. If the amount of oil drained from the old A/C compressor is greater than 142 ml (5 oz.), pour only 142 ml (5 oz.) of clean refrigerant oil into the new A/C compressor. If the amount of refrigerant oil drained from the old A/C compressor is less than 85 ml (3 oz.), pour 85 ml (3 oz.) of clean refrigerant oil into the new compressor.
4. NOTE: It will be necessary to transfer the A/C clutch (2884) from the old A/C compressor to the new A/C compressor.

   Install the new A/C compressor. Be sure the compressor mounting bolts are tightened to the proper specification. Check the tension of the drive belt (8620). Adjust, if necessary.
5. Remove the suction accumulator/drier and drain the oil into a calibrated container.
6. Add clean refrigerant oil to the new suction accumulator/drier in the same amount that was removed from the old unit, plus an additional 60 ml (2 oz.) of new refrigerant oil.
7. Install the suction accumulator/drier in the vehicle.

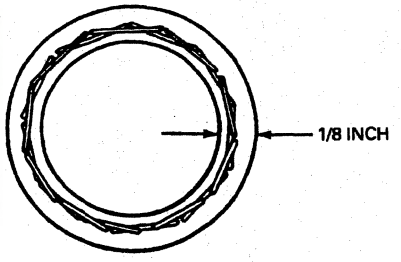

NYLON HOSE M4546-A

8. Get the proper service kit for the vehicle on which you are working. Filter kit with the service part number suffix A is used on vehicles with a nylon lined evaporator to compressor suction line (19867).

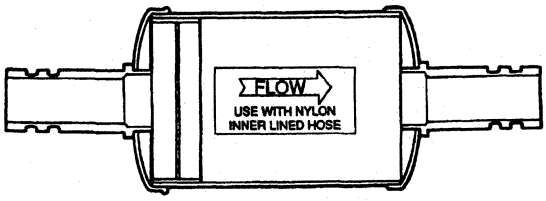

M3730-A

REMOVAL AND INSTALLATION (Continued)

9. Remove a length of evaporator to compressor suction line to accommodate the suction filter and install the filter using the clamps provided with the kit. Make sure filter is correctly oriented for refrigerant system flow. Check the label on the filter. On the filter for nylon lined evaporator to compressor suction line, install O-rings (two on each filter tube being sure they are properly seated in the grooves on the tube). Tighten the clamps securely.
10. Install a new A/C evaporator core orifice. If the A/C evaporator core orifice is located in the condenser to evaporator tube between the A/C condenser core (19712) and the A/C evaporator core (19860), replace the condenser to evaporator tube. Refer to Section 12-00.
11. Install a pancake filter in the condenser to evaporator tube between the A/C condenser core and the A/C evaporator core orifice. Make sure the filter inlet is toward the A/C condenser core. Connections can be made using A/C Test Fitting Set D93L-19703-B or equivalent and flexible refrigerant hose of 2500 psi burst rating. Individual fittings are also available.

Condenser Core Connections

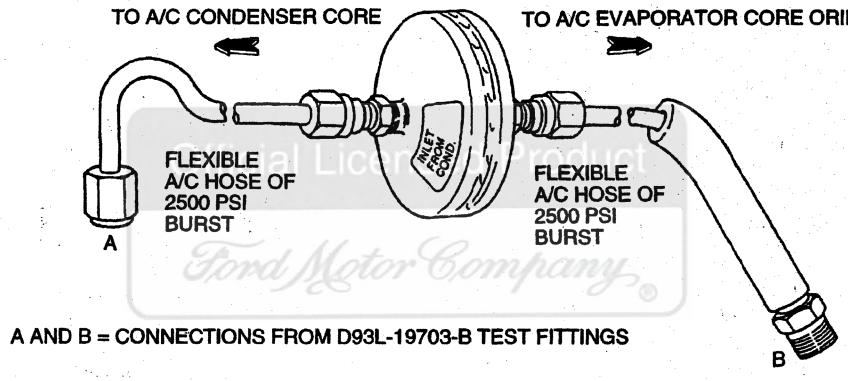

A AND B = CONNECTIONS FROM D93L-19703-B TEST FITTINGS

M5408-A

12. Evacuate, charge and leak test the system.
13. Check all refrigerant system hoses, lines and the positioning of the newly installed filters to be sure they do not interfere with other engine compartment components. If necessary, use tie straps to make adjustments.
14. Provide adequate airflow to the front of the vehicle (with a fan, if necessary), and set the selector valve at MAX A/C. Set the blower motor (18527) on HIGH and temperature control at full cool. Start the engine (6007) and let it idle briefly. Make sure the A/C system is operating properly.
15. Gradually bring the engine up to 1200 rpm by running it at lower rpms for short periods (first at 800 rpm, then at 1000 rpm). Set the engine at 1200 rpm and run it for an hour with the A/C system operating.
16. Stop the engine.
17. Allow the engine to cool sufficiently to remove the fittings, flexible hoses and pancake filter from the condenser to evaporator tube. (It will be necessary to discharge the system first.)
18. Discard the pancake filter. It can be used one time only.
19. Reconnect the condenser to evaporator tube back into the system.
20. Evacuate, charge and leak test the system. Make any necessary adjustments.
21. Check the operation of the system in all modes.

A/C Manifold and Tube

For information on removal and installation of the A/C manifold and tube (19D734), refer to Refrigerant Lines in the Removal and Installation portion of this section.

REMOVAL AND INSTALLATION (Continued)

A/C Vacuum Reservoir Tank and Bracket

Removal

1. Disconnect A/C plenum vacuum harness (18C581) from A/C vacuum reservoir tank and bracket (19A566), located in the engine compartment above the right wheel.
2. Working from outside of the engine compartment, remove two nuts from wheel well housing (above tire).
3. Remove A/C vacuum reservoir tank and bracket from vehicle.

Installation

1. Place A/C vacuum reservoir tank and bracket in its location inside the engine compartment.
2. Working from outside the engine compartment (above tire), install two nuts retaining A/C vacuum reservoir tank and bracket to vehicle.
3. Connect A/C plenum vacuum harness to A/C vacuum reservoir tank and bracket.
4. Check system for proper operation.

A/C Compressor Relief Valve

Removal

1. Discharge A/C system. Refer to Section 12-00. Observe all safety precautions.
2. Remove A/C compressor pressure relief valve (19D644), located in side of A/C manifold and tube (19D734).

Installation

1. Install new green O-rings, part number N807114-S, lubricated with clean refrigerant oil, on A/C compressor pressure relief valve.
2. Install A/C compressor pressure relief valve on A/C manifold and tube. Tighten to 5-15 N·m (44-133 lb-in).
3. Evacuate, leak test and recharge the A/C system. Refer to Section 12-00. Observe all safety precautions.

ADJUSTMENTS

Mini-Tube Vacuum Hoses

To check for proper functional control in the system, move the heater blower motor switch (18578) to HIGH. Then, move the function selector to each of its seven positions. There should be airflow from the appropriate registers, heater outlet floor duct (18C433) and nozzles and no airflow in the OFF position.

If proper airflow is not provided, look for the following:

- an A/C plenum vacuum harness (18C581) that is not fully seated at the vacuum control motor (18A318)
- a damaged connector between the A/C control (19980) and heater air plenum chamber (18471)
- a damaged connection between the heater air plenum chamber and vacuum source
- an A/C plenum vacuum harness that is pinched or trapped
- a transposed vacuum line (evident when the color code on the vacuum line fails to match the color code on its mating vacuum nipple)
- an inoperative A/C control

Cables

A/C Temperature Control Cable

NOTE: No adjustment is necessary, providing all attaching components are set in a full warm position prior to any installation procedure.

The A/C temperature cable (19988) is shipped in a full warm position.

A/C Compressor Drive Belt Tension

Refer to Section 03-05 in the Powertrain, Drivetrain Manual.

SPECIFICATIONS

REFRIGERANT SYSTEM SPECIFICATIONS

Description	Specification
A/C Cycling Switch	Closed Maximum 324 kPa (47 psi) Open Minimum 163 kPa (23.5 psi)
High Pressure Relief Valve (Located on Compressor Discharge Manifold)	3172 kPa (460 psi) Minimum
Maximum Capacity	1124 ml (38 Oz.)
Refrigerant R-134a	Motorcraft YN-11 WSH-M17B19-A
Refrigerant Oil	Motorcraft YN-12B WSH-M1C231-B
Fixed Orifice Tube	1.575 mm (0.062 Inch) (Color Code Red)

ELECTRICAL SYSTEM

Switch Setting	Amps	Volts
Low	6.0	5.0
Medium Low	8.0	7.0

(Continued)

SPECIFICATIONS (Continued)

ELECTRICAL SYSTEM (Cont'd)

Switch Setting	Amps	Volts
Medium High	15.0	10.0
High	25.0	12.8
Magnetic Clutch Current Draw	4.57	12.8
Control Assembly Illumination	One ICP — 161 Bulb	
Protective Device	30 Amp. Fuse (F-15) (Lt. Green) Thermal Limiter in Blower Resistor Circuit (Integral with Resistor)	

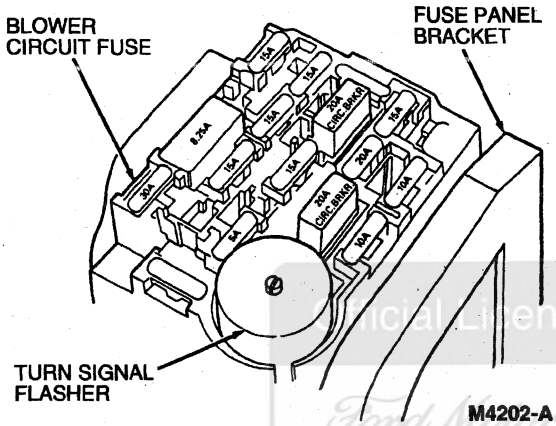

SPRING LOCK COUPLING COMPONENTS

O-Ring	3/8-Inch — W701993 1/2-Inch — W701992 5/8-Inch — W701994 3/4-Inch — 391305-S100
Garter Springs	3/8-Inch — E1ZZ-19E576-A (YF-990) 1/2-Inch — E1ZZ-19E576-B (YF-991) 5/8-Inch — E35Y-19E576-A (YF-1134) 3/4 Inch — E69Z-19E576-A

LUBRICANT/ADHESIVE/CLEANER SPECIFICATIONS

Description	Part Number	Ford Specification
Liquid Butyl Sealer	C9AZ-1954-B	ESB-M4G162-A
Caulking Cord	D6AZ-19560-A	ESB-M4G32-A

TORQUE SPECIFICATIONS

Description	N·m	Lb-Ft	Lb-In
Suction Line to Accumulator	34-44	25-32	—
Pressure Cutoff Switch	7-13	—	62-115
Condenser Mounting Brackets	14-19	11-14	—
Compressor Discharge Line to Condenser	21-27	15-20	—
Liquid Line to Condenser	21-27	15-20	—
A/C Cycling Switch	7-13	—	62-115
Pressure Relief Valve	5-15	—	44-133

(Continued)

TORQUE SPECIFICATIONS (Cont'd)

Description	N·m	Lb-Ft	Lb-In
A/C Accumulator Bracket	21-27	15-20	—
Heater Water Hose Clamps	1.4-2	—	12-18
Heater Hose Clip Bolt, Ambulance Package	7-11	—	62-97
Heater Air Plenum Chamber Screws	2.5-3.0	—	22-27
Compressor Mounting Bolts	22-31	17-23	—
A/C Manifold and Tube to A/C Compressor	18	13	—
Suction Accumulator Drier to A/C Manifold and Tube Suction Line	41-47	30-35	—
A/C Dehydrator and Receiver Coupling — Motorhome	15-18	11-13	—
Condenser Mounting Bolts — Motorhome	21-32	15-24	—
A/C Compressor Discharge Valve Assembly — Motorhome	32-40	24-30	—
A/C Compressor to Condenser Discharge Line (Compressor Side) — Motorhome	53-67	39-49	—
A/C Compressor to Condenser Discharge Line (Condenser Side) — Motorhome	15-17	11-13	—
A/C Cycling Switch — Motorhome	1.5	—	18
A/C Dehydrator Tank Mounting Brackets — Motorhome	7-9	—	62-80

SPECIAL SERVICE TOOLS/EQUIPMENT

SPECIAL SERVICE TOOLS REQUIRED

Tool Number/ Description	Illustration
T63L-8620-A Belt Tension Gauge	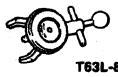 T63L-8620-A
T84L-19623-B Spring Lock Coupling Disconnect Tool Set	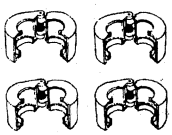 T84L-19623-B
T94P-18532-A Temperature Control Cable Removal Tool	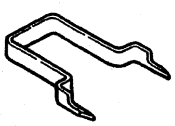 T94P-18532-A

SPECIAL SERVICE TOOLS/EQUIPMENT (Continued)

SPECIAL SERVICE TOOLS DESIRED

Tool Number	Description
D80L-19990-A	Fixed Orifice Tube Tool
D80L-19990-B	Broken Orifice Tube Extractor
D92T-19703-A	A/C Louver Assembly Remover
D93L-19703-B	A/C Test Adapter Set
D94L-19703-A	High Side A/C Fitting Socket
D94L-19703-B	Low Side A/C Fitting Socket

ROTUNDA EQUIPMENT

Model	Description
014-R1054	Vacuum Leak Tester
176-R032A	R-134a Manifold Gauge Set
176-R0036	R-134a Low-Side Quick Disconnect
176-R0037	R-134a High-Side Quick Disconnect

Official Licensed Product
Ford Motor Company

SECTION 12-03B Compressor and Clutch, FS-10

SUBJECT	PAGE
VEHICLE APPLICATION	12-03B-1
DESCRIPTION AND OPERATION	
A/C Compressor	12-03B-1
DIAGNOSIS AND TESTING	
Compressor and Clutch	12-03B-1
REMOVAL AND INSTALLATION	
A/C Clutch and A/C Clutch Pulley	12-03B-2
A/C Clutch Field Coil	12-03B-4
A/C Compressor	12-03B-2
REMOVAL AND INSTALLATION (Cont'd.)	
Refrigerant System Filtering After A/C Compressor Replacement	12-03B-2
A/C Manifold and Tube Assembly	12-03B-2
Shaft Seal	12-03B-5
ADJUSTMENTS	
A/C Clutch Air Gap	12-03B-7
SPECIFICATIONS	12-03B-9
SPECIAL SERVICE TOOLS/EQUIPMENT	12-03B-9

VEHICLE APPLICATION

F-Series

DESCRIPTION AND OPERATION

A/C Compressor

The FS-10 is a swashplate design ten-cylinder aluminum A/C compressor (19703) with tangential design mount. The compressor mainshaft is driven by a belt from the engine crankshaft pulley. A one-piece lip-type seal (replaceable from the front of the compressor) is used to seal it at the shaft opening in the assembly. Five double-acting pistons, positioned axially around the compressor shaft, operate within the cylinder assembly. The pistons are actuated by a swashplate that is pressed on the compressor shaft. The swashplate changes the rotating action of the shaft to provide a reciprocating driving force to each of the five pistons. This driving force is applied, through shoes, to the midpoint of each of the double end pistons.

Reed-type discharge valves are assembled on the valve plate, which is located with the suction reed valve between the cylinder assembly and the head at each end of the A/C compressor. The heads are connected to each other by gas-tight passageways through the cylinder assembly that direct the refrigerant gas to the suction and discharge ports located in the rear head.

A magnetic A/C clutch (2884) is used to drive the compressor shaft. When voltage is applied to the A/C clutch field coil (2987), the clutch plate and hub assembly (which is solidly coupled to the compressor shaft) is drawn rearward by magnetic force toward the A/C clutch pulley (2E884), which rotates freely on the compressor front head casting. The magnetic force locks the clutch plate and hub assembly and the pulley together as one unit. The compressor shaft then turns with the A/C clutch pulley. When voltage is removed from the A/C clutch field coil, springs in the clutch plate and hub assembly move the clutch plate away from the A/C clutch pulley. The clutch plate hub assembly and compressor shaft cease to rotate.

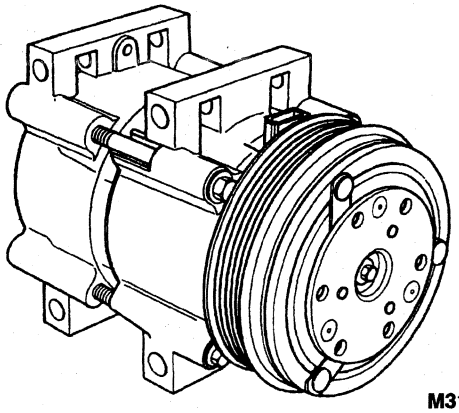

M3141-A

DIAGNOSIS AND TESTING

Compressor and Clutch

Refer to Section 12-00.

REMOVAL AND INSTALLATION

A/C Compressor

Refrigerant System Filtering After A/C Compressor Replacement

Refer to Section 12-03A.

A/C Manifold and Tube Assembly

Refer to Section 12-03A.

A/C Clutch and A/C Clutch Pulley

A disassembled view of the A/C clutch (2884) and related parts is shown in the illustration.

A/C Clutch

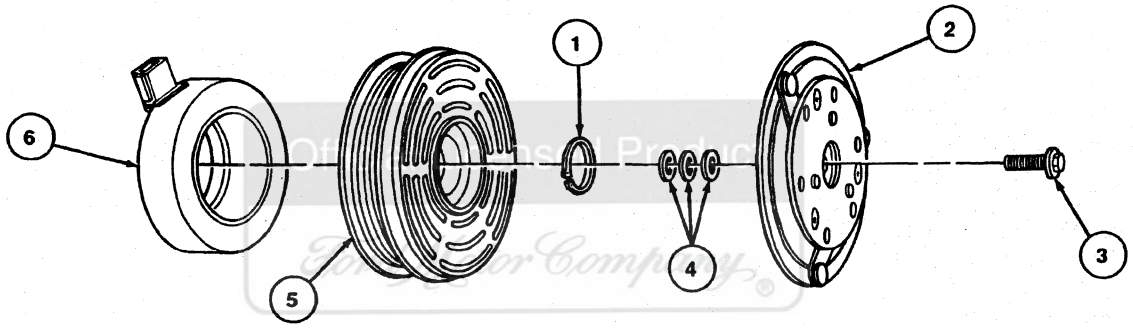

M3304-D

Item	Part Number	Description
1	N800620-S2	Pulley Snap Ring
2	2884	A/C Clutch
3	—	Bolt (8 mm) (Part of 19D786)

Item	Part Number	Description
4	—	Shims (Part of 19D786)
5	2E884	A/C Clutch Pulley
6	2987	A/C Clutch Field Coil

(Continued)

SPECIAL SERVICE TOOL(S) REQUIRED

Description	Tool Number
Spanner Wrench	T70P-4067-A
Compressor Clutch Holding Tool	T94P-19703-AH

Removal

1. Remove the clutch hub retaining bolt using Spanner Wrench T70P-4067-A for diesel engines or Compressor Clutch Holding Tool T94P-19703-AH for gasoline engines to hold the A/C clutch hub steady during bolt removal.

REMOVAL AND INSTALLATION (Continued)

Gasoline Engine

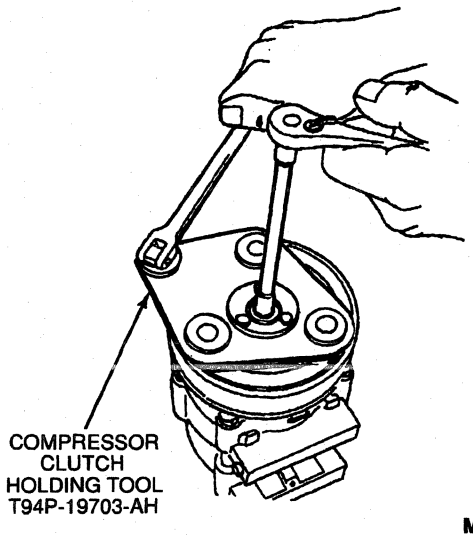

M5019-A

Diesel Engine

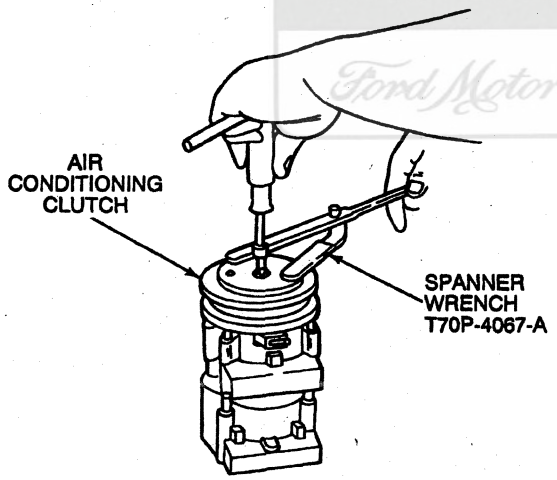

L10235-A

2. Pull clutch hub and shims from compressor shaft. If hub cannot be pulled from compressor shaft, screw an 8-mm bolt into the shaft hole of the clutch hub to force the hub from the shaft.

Diesel Engine

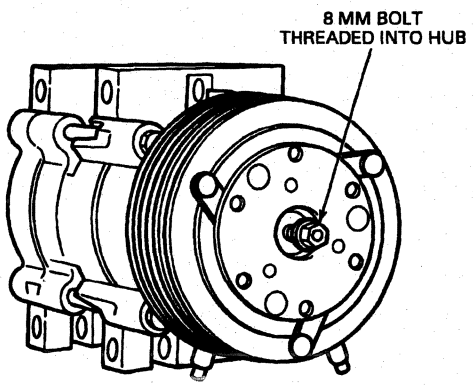

L7342-B

Gasoline Engine

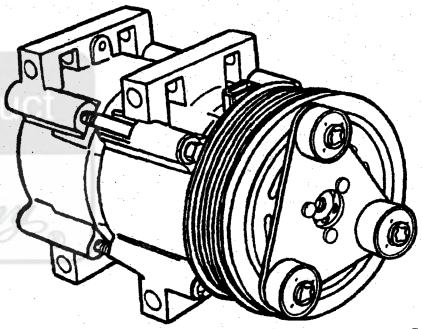

M4782-A

3. Remove pulley retaining snap ring.
4. Pull the A/C clutch pulley (2E884) and A/C compressor pulley bearing (2990) from A/C compressor (19703).

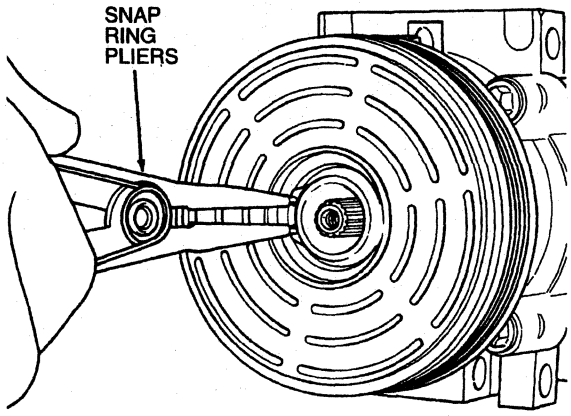

M3307-A

Official Licensed Product
Ford Motor Company

REMOVAL AND INSTALLATION (Continued)

Installation

1. Clean A/C compressor pulley bearing surface of compressor head to remove any dirt or corrosion.
2. Install A/C clutch pulley and A/C compressor pulley bearing on A/C compressor. The bearing is a slip-fit on the compressor head and, if properly aligned, it should slip on easily.
3. Install pulley retaining snap ring with bevel side of snap ring out.
4. Place one nominal thickness spacer shim inside the hub spline opening and slide the hub on the end of the compressor shaft. Adjust air gap to 0.35-0.85 mm (0.014-0.033 inch).
5. **CAUTION: Do not use air tools.**

   Thread a new 8-mm hub retaining bolt into end of compressor shaft. Tighten hub retaining bolt to 11-13 N·m (8-10 lb-ft).

A/C Clutch Field Coil

The A/C clutch field coil (2987) is pressed on the front head of the A/C compressor (19703). Special service tools are required to remove and install the A/C clutch field coil.

SPECIAL SERVICE TOOL(S) REQUIRED

Description	Tool Number
Shaft Protector for Coil Removal	T89P-19623-FH
Differential Side Bearing Puller	T77F-4220-B1
Field Coil Replacer	T91L-19623-CH
Coil Pressing Tool	T89P-19623-EH

Removal

1. Remove the A/C compressor from the vehicle following the recommended service procedure. Refer to Section 12-03A.
2. Remove the clutch hub and pulley.
3. Install Shaft Protector for Coil Removal T89P-19623-FH on the nose opening of the A/C compressor.
4. Install Differential Side Bearing Puller T77F-4220-B1 on the A/C compressor. Place the tip of the puller forcing screw in the center pilot of the shaft protector and the jaws of the puller around the back edge of the A/C clutch field coil.
5. **CAUTION: Do not use air tools.**

   Tighten the puller forcing screw to pull the A/C clutch field coil from the compressor head.

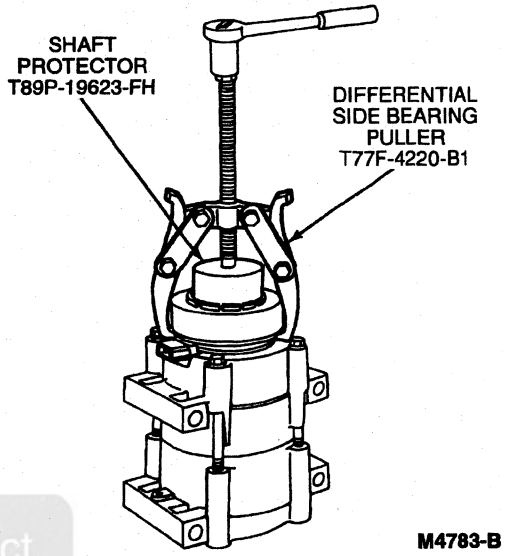

M4783-B

Installation

1. Clean the mounting surface on the front head to remove any dirt or corrosion.
2. With the A/C compressor in a vertical position (nose up), place the A/C clutch field coil in position on the compressor front head. Make sure the coil electrical connector is positioned correctly.
3. Place Field Coil Replacer T91L-19623-CH in position centered over the A/C clutch field coil.
4. Place the Coil Pressing Tool T89P-19623-EH in position over the compressor nose and to the inner radius of the A/C clutch field coil.

REMOVAL AND INSTALLATION (Continued)

5. Position 2-Jaw Puller D80L-1002-L or equivalent on the A/C compressor and the coil pressing tool. The jaws of the puller should be firmly engaged with the rear side of the compressor front mounts. The forcing screw must be piloted on the center mark of the pressing tool.

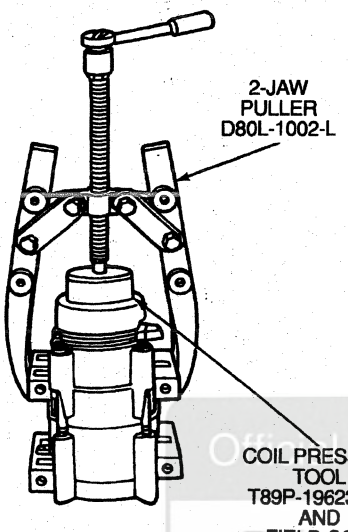

L10239-A

6. **CAUTION: Do not use air tools.**
   Tighten the forcing screw with a hand wrench until the A/C clutch field coil is pressed on the compressor front head. Check to make sure that the A/C clutch field coil bottoms against the head at all points around the outer diameter.
7. Install the clutch pulley and hub on the A/C compressor. Adjust the air gap as necessary. Refer to A/C Clutch Air Gap in the Adjustments portion of this section.
8. Install the A/C compressor on the vehicle following the recommended service procedure. Refer to Section 12-03A.

Shaft Seal

The refrigerant must be recovered and the A/C compressor (19703) must be removed from the vehicle prior to replacing the compressor shaft seal. Refer to Section 12-00.

SPECIAL SERVICE TOOL(S) REQUIRED

Description	Tool Number
Snap Ring Remover	T89P-19623-DH
Shaft Seal Remover	T89P-19623-BH
Shaft Seal Protector	T89P-19623-CH
Shaft Seal Replacer	T89P-19623-AH

Removal

1. Remove clutch hub from A/C compressor.
2. Remove shaft seal felt from nose of compressor with a plastic toothpick or similar tool that will not scratch any surfaces.

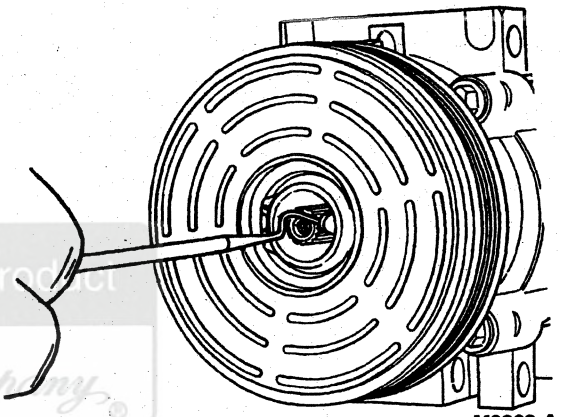

M3309-A

3. Blow any debris from inside the compressor nose with low pressure compressed air. Then clean the inside and outside nose area of the A/C compressor with a lint free cloth to remove any oil and dirt.
4. Remove shaft seal retaining snap ring from inside compressor nose with Snap Ring Remover T89P-19623-DH as described in the following steps. Refer to the following illustrations.
5. Insert the tip of the Snap Ring Remover T89P-19623-DH into one of the snap ring eyes.

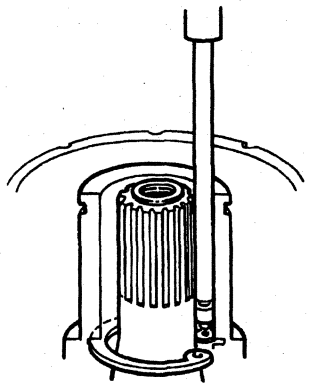

M4784-A

Official Licensed Product Ford Motor Company

REMOVAL AND INSTALLATION (Continued)

6. Rotate the snap ring remover to position the tool tip and the snap ring eye closest to the compressor shaft.

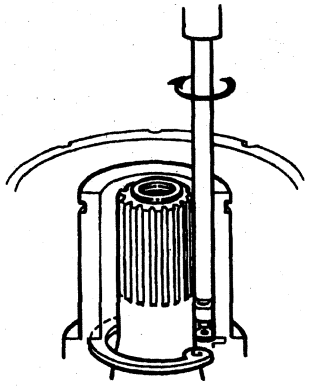

M4785-A

7. Pull the snap ring remover up quickly while keeping the tool shaft against the side of the nose opening and remove the snap ring.

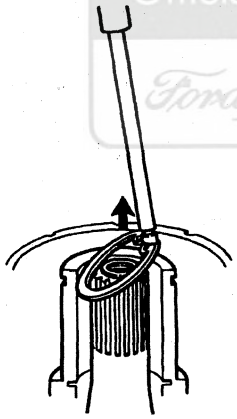

M4786-A

8. Position Shaft Seal Remover T89P-19623-BH over compressor shaft and push tool into nose of A/C compressor and down against shaft seal. Engage end of tool with internal diameter of shaft seal. While holding the hex part of the tool, turn tool handle clockwise to expand tool tip inside seal inner radius. Then, pull shaft seal from the A/C compressor with the tool.

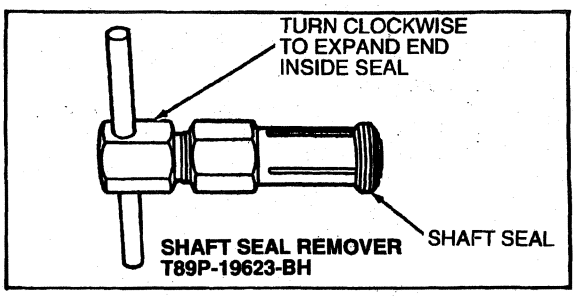

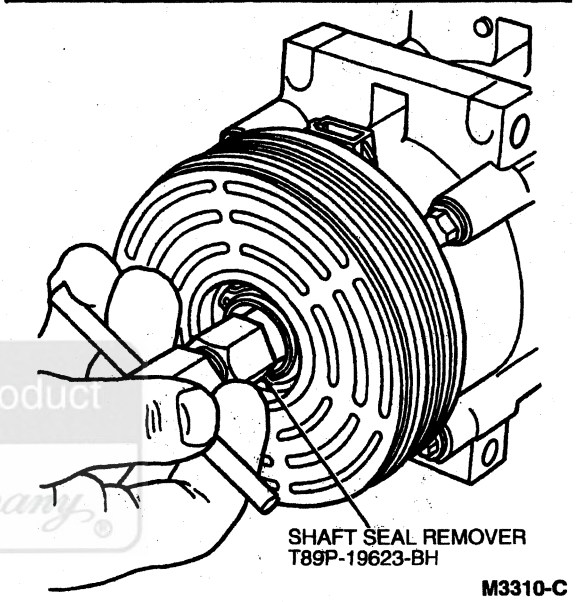

M3310-C

Installation

1. Obtain a new Shaft Seal Kit (Basic Part No. 19D665). Carefully remove the contents of the kit from the package. A plastic shaft seal protector is included with each kit. Inspect the protector for any burrs or other damage. Do not use the protector if it is damaged. Obtain another shaft seal kit, if necessary, and use the protector from it.
2. **CAUTION: Do not allow any dirt or foreign materials to enter the A/C compressor.**

   Using a clean lint free cloth, clean the compressor shaft and the seal pocket inside the compressor nose.

Official Licensed Product
Ford Motor Company

REMOVAL AND INSTALLATION (Continued)

3. Dip Shaft Seal Protector T89P-19623-CH and shaft seal in clean refrigerant oil for R-134a Systems F2AZ-19577-AC (Motorcraft YN-12B) or equivalent meeting Ford specification WSH-M1C231-B. Position the shaft seal on the protector with the lip of the seal pointing toward the large end of the protector.

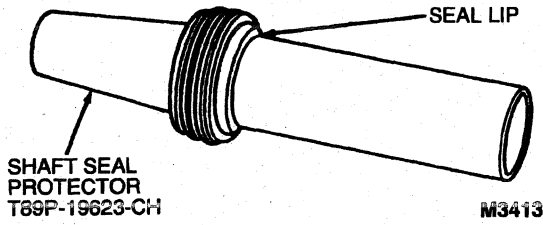

4. Place the shaft seal protector with shaft seal over the end of the compressor shaft.

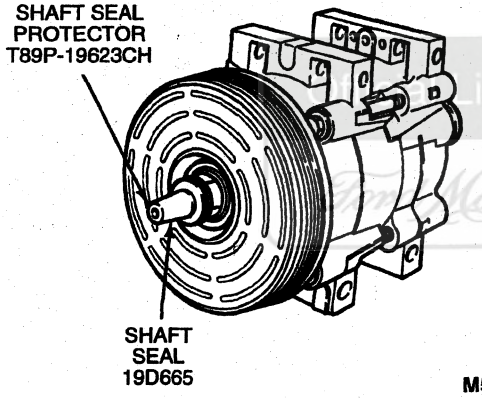

5. Using Shaft Seal Replacer T89P-19623-AH, slowly push seal down shaft protector onto compressor shaft until seated.

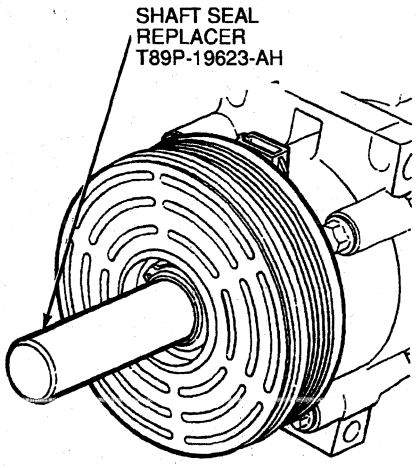

6. Remove installer tool and shaft protector from compressor shaft.
7. Place a new shaft seal retaining snap ring into the compressor nose opening and seat the snap ring into the groove.
8. Leak test the shaft seal installation after rotating the compressor shaft about ten revolutions with the clutch hub. Refer to Section 12-00.
9. Install a new shaft seal felt in nose of A/C compressor.
10. Install clutch hub on A/C compressor.
11. Check and adjust the air gap as necessary. Refer to A/C Clutch Air Gap in the Adjustments portion of this section.

ADJUSTMENTS

A/C Clutch Air Gap

SPECIAL SERVICE TOOL(S) REQUIRED

Description	Tool Number
Spanner Wrench	T70P-4067-A
Compressor Clutch Holding Tool	T94P-19703-AH

Before disassembling A/C compressor (19703) for repair, it is important to check the A/C clutch air gap. This will help determine if the A/C clutch (2884) is not engaging, or if the A/C compressor is failing internally.

ADJUSTMENTS (Continued)

1. Check A/C clutch air gap between clutch hub and A/C clutch pulley (2E884) mating surfaces with a feeler gauge. The air gap should be between 0.35 and 0.85 mm (0.014 and 0.033 inch). Check at three locations equally spaced around the A/C clutch pulley.

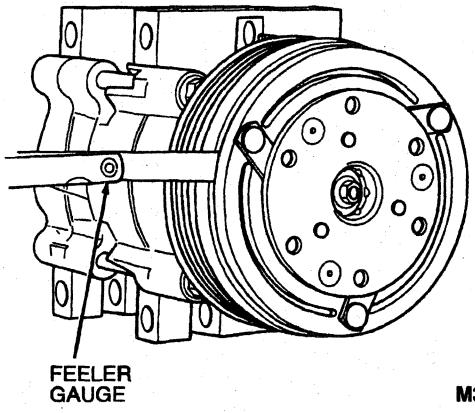

M3308-A

2. NOTE: If desired gap is not attainable with the available shims, clutch hub and A/C clutch pulley should be inspected for wear or damage. Replace as required.

   If A/C clutch air gap is not within specification, use the following steps to adjust air gap.

3. Use Spanner Wrench T70P-4067-A (diesel engine) or Compressor Clutch Holding Tool T94P-19703-AH (gas engine) to hold the A/C clutch in position while removing the clutch bolt.

Gasoline Engine

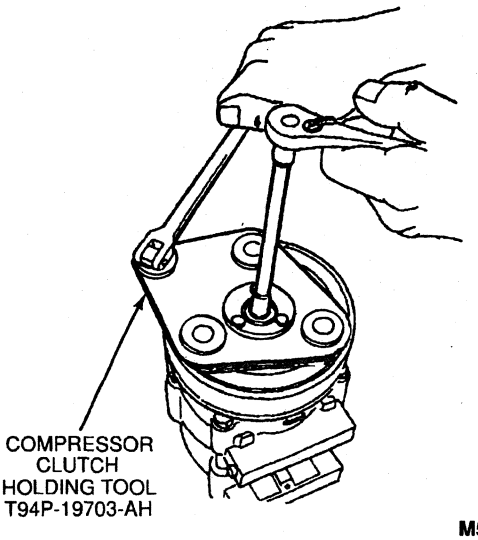

M5019-A

Diesel Engine

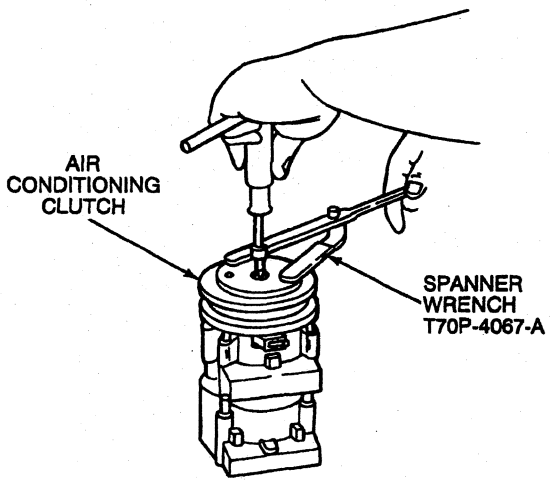

L10235-A

4. Pull the A/C clutch and shims from the A/C compressor shaft. If the A/C clutch cannot be removed, screw the clutch bolt into the clutch pulley hub to force the A/C clutch from the shaft.

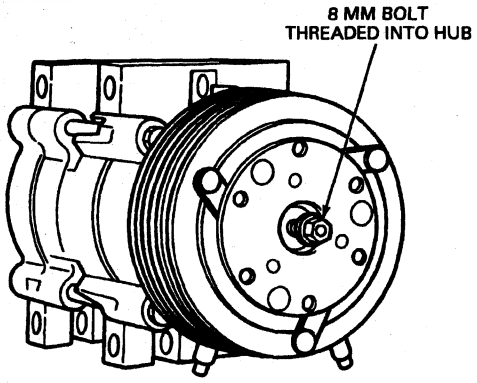

L7342-B

5. Start by placing the smallest nominal thickness shim inside the A/C clutch spline opening and slide the A/C clutch onto the end of the A/C compressor shaft.
6. **CAUTION: Do not use air tools to tighten the bolt.**

   Install the clutch bolt into the end of the compressor shaft. Use Spanner Wrench T70P-4067-A (diesel engine) or Compressor Clutch Holding Tool T94P-19703-AH (gas engine) to hold the A/C clutch and hub in position while tightening the clutch bolt. Tighten the A/C clutch bolt to 11-13 N·m (8-10 lb-ft).

ADJUSTMENTS (Continued)

7. Recheck A/C clutch air gap between clutch hub and pulley mating surfaces with a feeler gauge. The air gap should be between 0.35 and 0.85 mm (0.014 and 0.033 inch). Check at three locations equally spaced around the A/C clutch pulley.

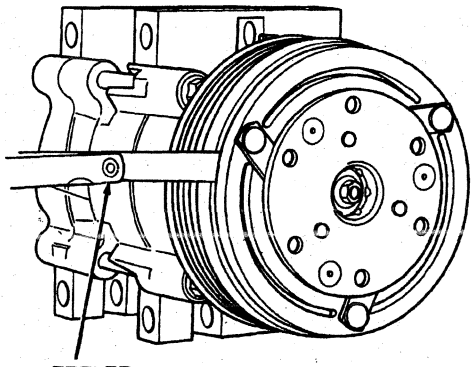

M3308-A

8. If A/C clutch air gap is not within specification, repeat Steps 3 through 7. Install the correct shim to achieve the desired air gap.

SPECIFICATIONS

A/C COMPRESSOR SPECIFICATIONS

Description	Specification
Type	Swashplate, 5 Double Acting Pistons — Axial Type
Displacement	10.4 CID (170 cc)
Cylinder Bore (Dia.)	29.0 mm
Stroke	25.7 mm
Rotation	Clockwise
Rotational Torque (Maximum, Manifold Removed)	13.0 N·m (9.6 Lb-Ft)
Refrigerant Oil — R134a	
Part Number F2AZ-19577-AC (Motorcraft YN-12B)	
Ford Specification	WSH-M1C231-B
Capacity (System Total)	207 ml (7 Ounces) 295 ml (10 Ounces) with Auxiliary A/C
Magnetic Clutch Air Gap Between Pulley and Hub	0.35 mm-0.85 mm (0.014-0.033 Inch)
Current Draw	4.36 Amps@ 12.8 Volts
Runout (Maximum)	0.02 Inch — Radial or Axial

TORQUE SPECIFICATIONS

Description	N·m	Lb-Ft
Clutch Hub Bolt	11-13	8-10

SPECIAL SERVICE TOOLS/EQUIPMENT

SPECIAL SERVICE TOOLS REQUIRED

Tool Number/ Description	Illustration
T70P-4067-A Spanner Wrench For Diesel Engines on F-Series	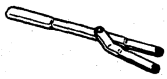 T70P-4067-A
T77F-4220-B1 Differential Side Bearing Puller	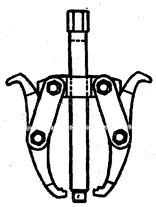 T77F-4220-B1
T89P-19623-AH Shaft Seal Replacer	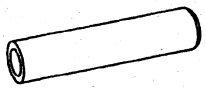 T89P-19623-AH
T89P-19623-BH Shaft Seal Remover	T89P-19623-BH 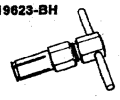 ST1024-A
T89P-19623-CH Shaft Seal Protector	T89P-19623-CH
T89P-19623-DH Snap Ring Remover	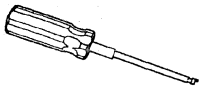 T89P-19623-DH
T89P-19623-EH Coil Pressing Tool	T89P-19623-EH
T89P-19623-FH Shaft Protector for Coil Removal	T89P-19623-FH

(Continued)

Official Licensed Product Ford Motor Company

SPECIAL SERVICE TOOLS/EQUIPMENT (Continued)

SPECIAL SERVICE TOOLS REQUIRED (Cont'd)

Tool Number/ Description	Illustration
T91L-19623-CH Field Coil Replacer	 T91L-19623-CH
T94P-19703-AH Compressor Clutch Holding Tool	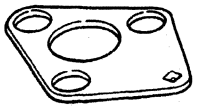 T94P-19703-AH

SPECIAL SERVICE TOOLS DESIRED

Tool Number	Description
D80L-1002-L	2-Jaw Puller

Official Licensed Product
Ford Motor Company

SECTION 12-03C Compressor and Clutch, SD-7H15

SUBJECT	PAGE
VEHICLE APPLICATION	12-03C-1
DESCRIPTION AND OPERATION	
A/C Compressor	12-03C-1
DIAGNOSIS AND TESTING	
Compressor and Clutch	12-03C-2
REMOVAL AND INSTALLATION	
A/C Clutch and A/C Clutch Pulley	12-03C-2
A/C Clutch Field Coil	12-03C-5
REMOVAL AND INSTALLATION (Cont'd.)	
A/C Compressor	12-03C-2
Thermal Protection Switch	12-03C-5
ADJUSTMENTS	
A/C Clutch Air Gap	12-03C-6
SPECIFICATIONS	12-03C-7
SPECIAL SERVICE TOOLS/EQUIPMENT	12-03C-7

VEHICLE APPLICATION

F-Super Duty

DESCRIPTION AND OPERATION

A/C Compressor

The SD-7H15 A/C compressor (19703) is an axial compressor with mounting brackets for tangential mounting. The compressor shaft is belt-driven from the engine accessory drive. The pistons, positioned axially around the compressor shaft, are actuated by a swash plate that is pressed on the compressor shaft. The swash plate uses the rotating action of the shaft to provide a reciprocating driving force to each of the pistons.

The SD-7H15 has seven cylinders. Reed-type suction and discharge valve plates are located between the cylinder assembly and the head.

An integral A/C clutch (2884) is used to drive the compressor shaft. When voltage is applied to the A/C clutch field coil (2987), the clutch plate and hub assembly (which is solidly coupled to the compressor shaft) is drawn by magnetic force toward the A/C clutch pulley (2E884), which rotates freely on the compressor front head casting. The magnetic force locks the clutch plate and hub assembly and the A/C clutch pulley together as one unit. The compressor shaft then turns with the A/C clutch pulley. When voltage is removed from the A/C clutch field coil, a rubber bushing in the clutch plate and hub assembly moves the clutch plate away from the A/C clutch pulley and the compressor shaft ceases to rotate.

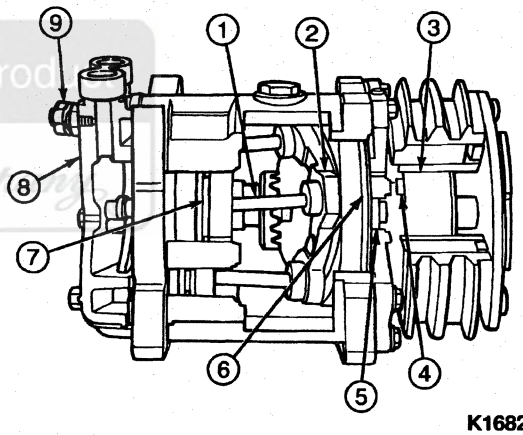

K16826-C

Item	Part Number	Description
1	—	Anti-Rotation Gear (Part of 19703)
2	—	Cam Rotor (Part of 19703)
3	—	Clutch Bearings (Part of 19703)
4	—	Shaft Seal (Part of 19703)
5	—	Front Housing and O-Ring (Part of 19703)
6	—	Needle Thrust Bearing (Part of 19703)
7	—	Piston (Part of 19703)
8	19703	A/C Compressor
9	—	Pressure Relief Valve (Part of 19D629)

DESCRIPTION AND OPERATION (Continued)

The A/C compressor is equipped with a thermal protection switch to automatically shut down operation by interrupting the electrical power to the A/C clutch when the compressor temperature exceeds approximately 116°C (240°F). The A/C compressor will automatically restart when it has cooled to approximately 99°C (210°F).

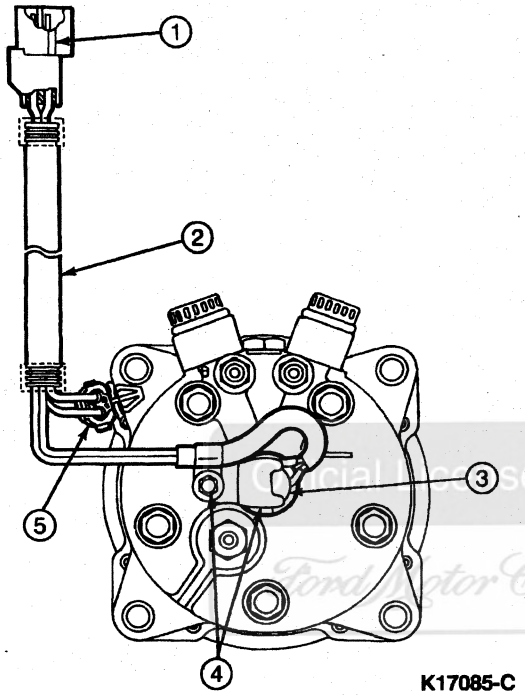

K17085-C

Item	Part Number	Description
1	—	Compressor Harness Connector (Gray — Part of 14401)
2	—	Compressor Harness (Part of 14401)
3	—	Thermal Switch Assy (Part of 19703)
4	—	Retaining Plate and Screw (Part of 19703)
5	—	Compressor Clutch Connector (White — Part of 14401)

DIAGNOSIS AND TESTING

Compressor and Clutch

Refer to Section 12-00.

REMOVAL AND INSTALLATION

A/C Compressor

Refer to Section 12-03A.

Refrigerant System Filtering After A/C Compressor Replacement

Refer to Section 12-03A.

A/C Clutch and A/C Clutch Pulley

SPECIAL SERVICE TOOL(S) REQUIRED

Description	Tool Number
Spanner Wrench	T70P-4067-A
Steering Wheel Puller	T67L-3600-A

Removal

1. Install Spanner Wrench T70P-4067-A into two threaded holes in the clutch front plate.
2. Hold clutch plate stationary and remove hex nut.

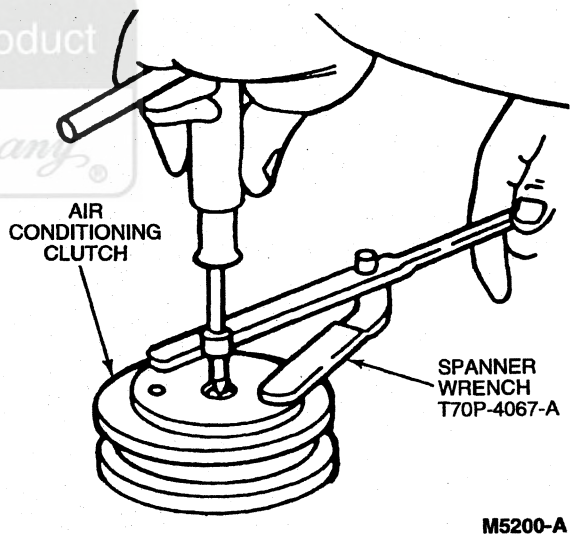

M5200-A

Official Licensed Product
Ford Motor Company

REMOVAL AND INSTALLATION (Continued)

3. Using Steering Wheel Puller T67L-3600-A, align puller center bolt to compressor shaft. Tighten three puller bolts into the threaded holes, then screw puller center bolt down against A/C compressor center shaft until A/C clutch (2884) releases from the A/C compressor shaft.

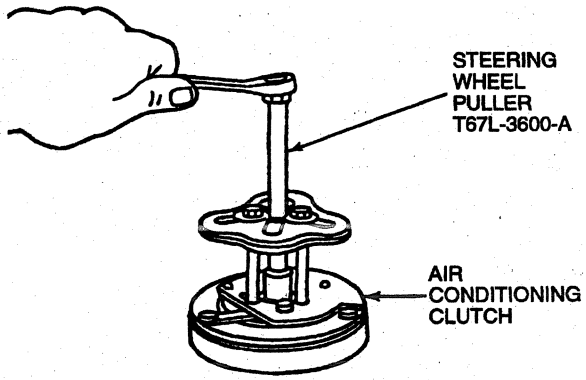

M5301-A

4. Remove bearing dust cover using a screwdriver.

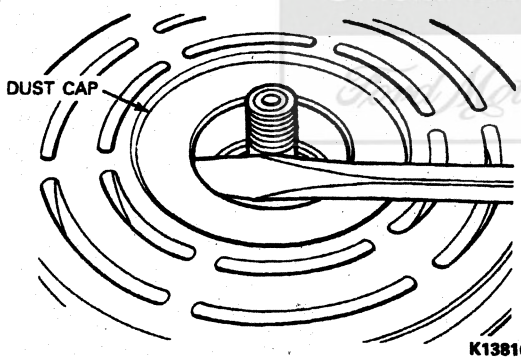

K13816-1A

5. Remove shaft key by lightly tapping it loose with a slotted screwdriver and hammer.

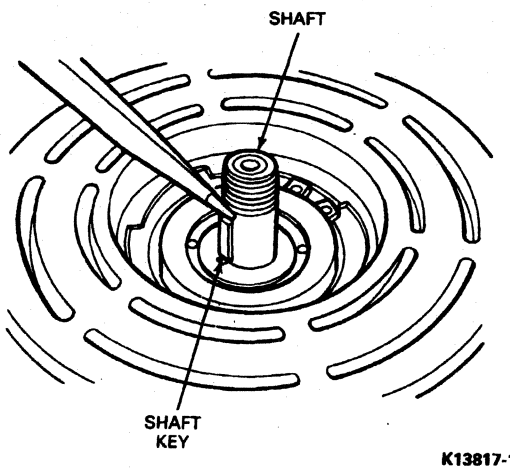

K13817-1A

6. Remove the internal bearing snap ring.

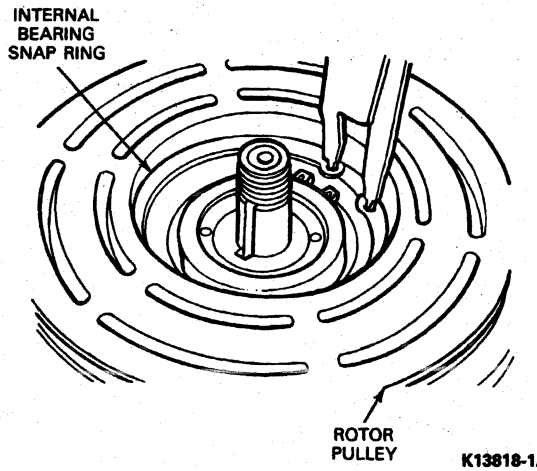

K13818-1A

7. Remove the external front housing snap ring.

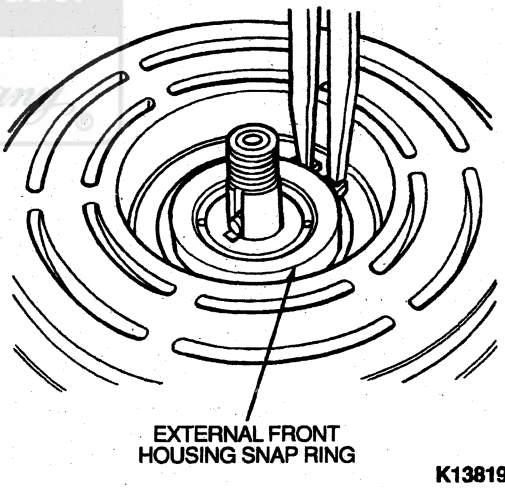

K13819-B

8. Insert puller jaws into the snap ring groove.

Official Licensed Product

REMOVAL AND INSTALLATION (Continued)

9. Place rotor puller shaft protector over exposed shaft.

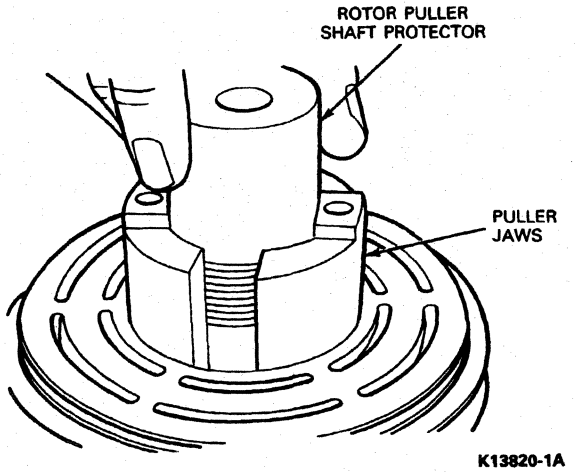

K13820-1A

10. Align thumb head bolts to puller jaws and finger-tighten.
11. Tighten center bolt until A/C clutch pulley (2E884) is removed.

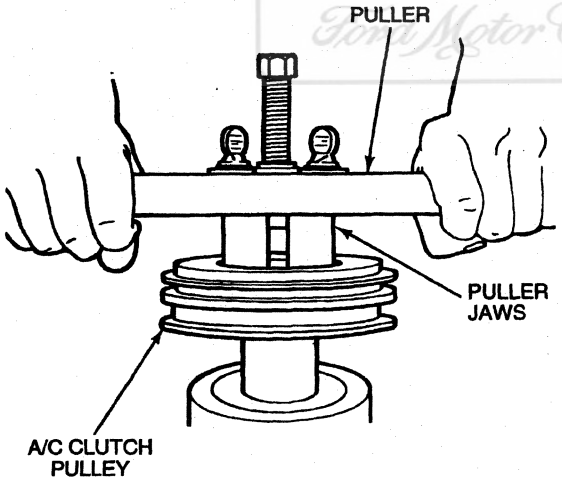

K13821-B

Installation

1. Support the A/C compressor (19703) on the four mounting ears on the rear of the compressor. If using a vise, clamp only on mounting ears, not on compressor body.
2. Align A/C clutch pulley squarely on the front housing hub.

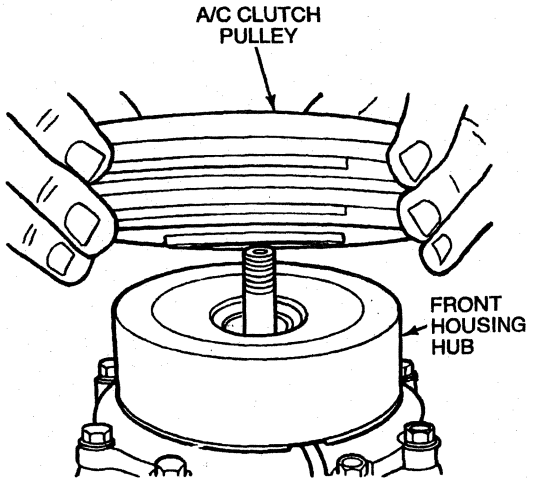

K13822-B

3. Using rotor installer ring set, place rotor installer ring into bearing cavity. Make sure the outer edge rests firmly on the A/C clutch pulley bearing outer race.
4. Place rotor installer driver into rotor installer ring.

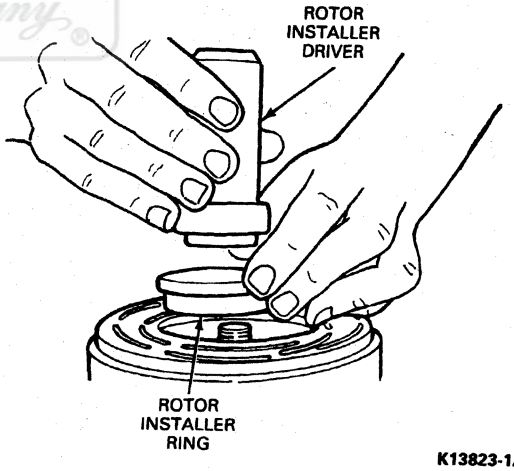

K13823-1A

5. Tap driver with a hammer while guiding the A/C clutch pulley to prevent binding. Tap until the A/C clutch pulley bottoms against the compressor front housing hub.
6. Install internal bearing snap ring.
7. Install external front housing snap ring.
8. Install front plate assembly.
9. Install compressor shaft key.
10. Align front plate keyway to compressor shaft key.

Official Licensed Product Ford Motor Company

REMOVAL AND INSTALLATION (Continued)

11. Using shaft protector, tap front plate to shaft until it bottoms out on the shims.

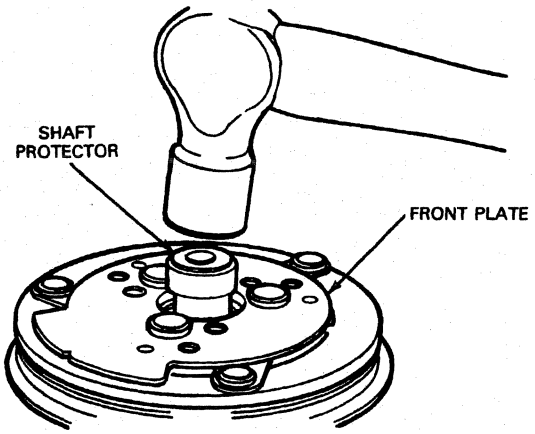

K13824-1A

12. Install shaft hex nut. Tighten to 34-40 N·m (25-30 lb-ft).

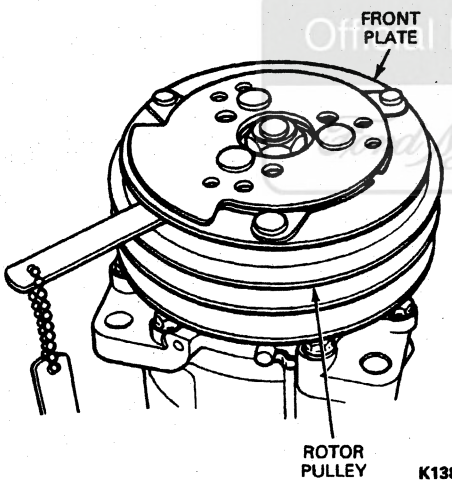

K13825-1A

13. Check air gap using a 0.4- to 0.8-mm (.016- to .031-inch) feeler gauge between hub and mating pulley surface in three locations equally spaced around pulley. Record air gap readings.
14. Rotate A/C clutch pulley one-half turn (180 degrees) and again check air gap in three equally spaced locations. Smallest air gap must be within specified limits for air gap. Add or remove shims between hub and compressor shaft end as necessary until smallest air gap is within specification.

A/C Clutch Field Coil

Removal

1. Remove A/C clutch hub and A/C clutch pulley (2E884).
2. Loosen coil lead wire clip from compressor front housing.

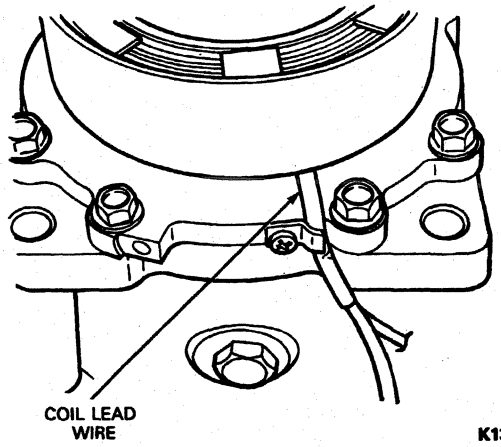

K13826-1B

3. Remove snap ring and field coil.

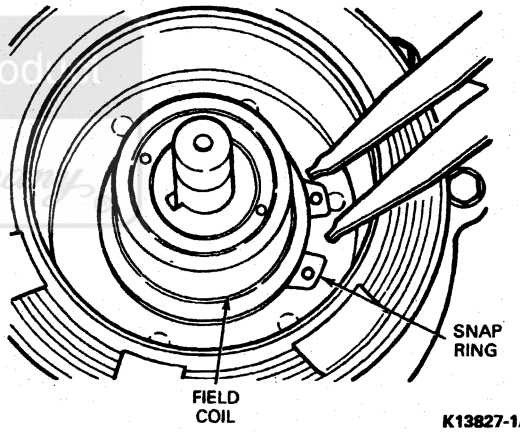

K13827-1A

Installation

1. Install A/C clutch field coil (2987) and snap ring.
2. Tighten clip on field coil lead wire.
3. Install A/C clutch pulley and hub on A/C compressor (19703).

Thermal Protection Switch

Removal

1. Remove the screw securing the thermal protection switch retainer plate and lead wire clamp.
2. NOTE: Switch removal may be difficult due to the silicone RTV used in switch installation. Never reinstall old thermal protection switch. Always replace with new switch unit, when required.

   Using a small bladed screwdriver, insert blade between switch and switch socket and remove switch.

Official Licensed Product Ford Motor Company

REMOVAL AND INSTALLATION (Continued)

Installation

1. Remove all the old silicone RTV and thoroughly clean the thermal protection switch socket.
2. Position the thermal protection switch so that the flat copper surface faces upward. Apply a small amount of silicone RTV to the flat copper switch surface to ensure outside air temperatures do not affect switch thermal sensing ability.
3. Install the switch in the mounting socket. Position wire clamp, retainer and install retaining screw. Tighten to 5.4-8.1 N·m (48-72 lb-in).

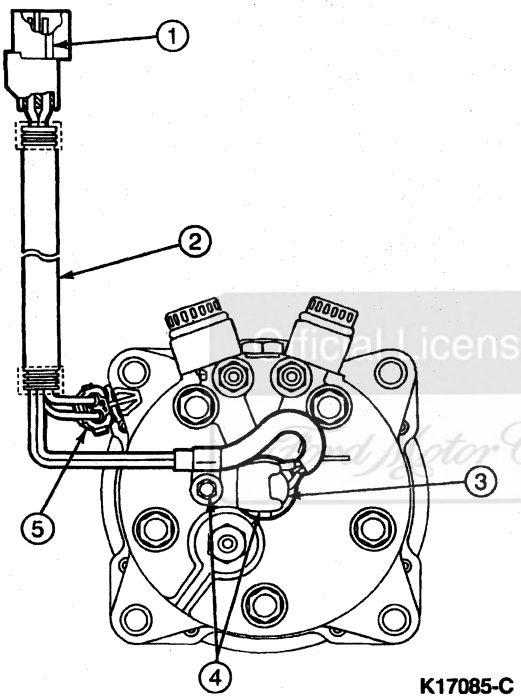

K17085-C

Item	Part Number	Description
1	—	Compressor Harness Connector (Gray — Part of 14401)
2	—	Compressor Harness (Part of 14401)
3	—	Thermal Switch Assy (Part of 19703)
4	—	Retaining Plate and Screw (Part of 19703)
5	—	Compressor Clutch Connector (White — Part of 14401)

ADJUSTMENTS

A/C Clutch Air Gap

SPECIAL SERVICE TOOL(S) REQUIRED

Description	Tool Number
Spanner Wrench	T70P-4067-A
Steering Wheel Puller	T67L-3600-A

NOTE: Before disassembling an A/C compressor (19703) for repair, it is important to check the A/C clutch air gap. This will help determine if the A/C clutch (2884) is not engaging, or if the A/C compressor is failing internally.

1. Check the A/C clutch air gap between the A/C clutch hub and the A/C clutch pulley (2E884) mating surfaces with a feeler gauge. The air gap should be between 0.41 and 0.79 mm (0.016-0.031 in.). Check at three locations equally spaced around the A/C clutch pulley.
2. NOTE: If a desired gap is not attainable with the available shims, the A/C clutch hub and A/C clutch pulley should be inspected for wear or damage. Replace as required.

   If the A/C clutch air gap is not within specification, use the following steps to adjust air gap.
3. Use Spanner Wrench T70P-4067-A to hold the A/C clutch in position while removing the A/C clutch retaining hex nut.
4. Pull the A/C clutch and shims from the A/C compressor shaft. If the A/C clutch cannot be removed, install Steering Wheel Puller T67L-3600-A on the A/C clutch, and use puller center bolt to force the A/C clutch off the A/C compressor shaft.
5. Start by placing the smallest nominal thickness shim inside the A/C clutch spline opening, and slide the A/C clutch onto the end of the A/C compressor shaft.
6. **CAUTION: Do not use air tools to tighten the bolt.**

   Install the clutch hex nut into the end of the A/C compressor shaft. Use Spanner Wrench T70P-4067-A to hold the A/C clutch and hub in position while tightening the A/C clutch hex nut. Tighten to 34-40 N·m (25-30 lb-ft).
7. Recheck the A/C clutch air gap between the A/C clutch hub and A/C clutch pulley mating surfaces with a feeler gauge. The air gap should be between 0.41 and 0.79 mm (0.016 and 0.031 in.). Check at three locations spaced equally around the A/C clutch pulley.
8. If the A/C clutch air gap is not within specification, repeat Steps 3 through 7. Install the correct shim(s) to achieve the desired air gap.

Unofficial Licensed Product Ford Motor Company

SPECIFICATIONS

A/C COMPRESSOR SPECIFICATIONS

Description	Specification
Type	Swash Plate, 7 Pistons, Axial Type
Displacement	154.9 cc (9.5 CID)
Rotation	Clockwise
Rotational Torque (Maximum Manifold Removed)	10 N·m (7 Lb-Ft)
Refrigerant Oil Type — R-134A System Capacity Part No.	 WSH-M1C231-B 300 ml F4HZ-19579-A
Magnetic Clutch Air Gap Between Pulley and Hub Current Draw Runout (Maximum)	 0.41-0.79 mm (0.016-0.031 In) 3.6 to 4.2@ 12.0 Volts 0.51 mm (0.02 In) Radial or Axial
Torque Limits Hose Manifold to Compressor Clutch Hub Nut Compressor Cylinder Bolts Suction Hose to Manifold Compressor to Mounting Bracket Bolts Compressor Mounting Bracket to Engine Manifold Assembly to Compressor	 30-40 N·m (22-30 Lb-Ft) 25-30 N·m (18-22 Lb-Ft) 22-25 N·m (16-18 Lb-Ft) 28-36 N·m (21-27 Lb-Ft) 40-55 N·m (30-41 Lb-Ft) 40-55 N·m (30-41 Lb-Ft) 37-39 N·m (27-29 Lb-Ft)

TORQUE SPECIFICATIONS

Description	N·m	Lb-Ft	Lb-In
Screw, Thermal Switch	5.4-8.1	—	48-72
Nut, Compressor Shaft	34-40	25-30	—

SPECIAL SERVICE TOOLS/EQUIPMENT

SPECIAL SERVICE TOOLS REQUIRED

Tool Number/ Description	Illustration
T67L-3600-A Steering Wheel Puller	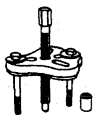 T67L-3600-A
T70P-4067-A Spanner Wrench	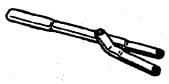 T70P-4067-A

Licensed Product Ford Motor Company

INSTRUMENTATION AND WARNING SYSTEMS

GROUP 13

SECTION TITLE	PAGE
GAUGES/WARNING DEVICES, CHIME/BUZZER SYSTEM	13-09-1
HORN	13-06-1
INSTRUMENT CLUSTER, CONVENTIONAL	13-01-1
INSTRUMENT CLUSTER AND PANEL LIGHTING	13-00-1

SECTION 13-00 Instrument Cluster and Panel Lighting

Official Licensed Product
Ford Motor Company

SUBJECT	PAGE
VEHICLE APPLICATION	13-00-1
DESCRIPTION AND OPERATION	
Instrument Cluster and Panel Lighting	13-00-1
DIAGNOSIS AND TESTING	
Electrical Schematic	13-00-2
Inspection and Verification	13-00-2
Pinpoint Tests	13-00-2
Symptom Chart	13-00-2
REMOVAL AND INSTALLATION	
Audio System Lamps	13-00-4
Bulbs, Miniature	13-00-4
Climate Control Lamps	13-00-4
Bulbs, Miniature	13-00-4
Instrument Cluster Lamps	13-00-4
Bulbs, Miniature	13-00-4
SPECIAL SERVICE TOOLS/EQUIPMENT	13-00-4

VEHICLE APPLICATION

F-250 Heavy Duty, F-350 and F-Super Duty

DESCRIPTION AND OPERATION

Instrument Cluster and Panel Lighting

The instrument cluster (10849) and panel lighting functions are powered through the rheostat in the headlamp switch (11654), through fuse 10 and Circuit 19 (LB/R). Ground to the lamps is provided through Circuit 57 (BK).

The instrument clusterand panel lighting circuit provides illumination to:

- heater control (18549)
- instrument cluster
- instrument panel ash receptacle (04810)
- electronic shift control switch
- radio chassis

Intensity of illumination is controlled by rotating the headlamp switch knob and shaft (11661) counterclockwise to stop for maximum intensity and clockwise for minimum intensity.

DIAGNOSIS AND TESTING

Electrical Schematic

Refer to Electrical and Vacuum Troubleshooting Manual, Cell 1, Instrument Illumination, and Cell 60, Instrument Cluster for schematic and connector information.

Inspection and Verification

1. Verify the vehicle owner's original concern by operating the headlamp switch (11654) in the PARK position with the headlamp switch knob and shaft (11661) rotated fully counterclockwise without turning on courtesy lamps to duplicate the condition.
2. Inspect to determine if any of the following electrical concerns apply:

VISUAL INSPECTION CHART

Electrical
• Fuse • Circuit wiring • Headlamp switch

3. If the concern(s) remain after the inspection, determine the symptoms and proceed to the following symptom chart.

Symptom Chart

Refer to the Electrical and Vacuum Troubleshooting Manual for the connector numbers in the pinpoint tests.

NOTE: Use Rotunda 73 Digital Multimeter 105-R0051 when performing the following pinpoint tests.

Official Licensed Product Ford Motor Company

INSTRUMENT CLUSTER AND PANEL LIGHTING

Condition	Possible Source	Action
• Control Illumination Inoperative	• Fuse. • Headlamp switch. • Circuit wiring.	• GO to Pinpoint Test A.
• Instrument Panel Illumination Does Not Dim	• Headlamp switch.	• GO to Pinpoint Test B.
• Instrument Cluster Illumination Inoperative	• Circuit wiring. • Illumination bulbs. • Instrument cluster printed circuit.	• GO to Pinpoint Test C.
• Climate Control Illumination Inoperative	• Circuit wiring. • Illumination bulbs.	• GO to Pinpoint Test A.
• Audio System Illumination Inoperative	• Circuit wiring. • Illumination bulbs.	• GO to Pinpoint Test D.
• Single Illumination Source Inoperative	• Circuit wiring. • Illumination bulbs.	• GO to Pinpoint Test A.

Pinpoint Tests

PINPOINT TEST A: CONTROL ILLUMINATION INOPERATIVE

Test Step		Result ▶	Action to Take
A1	CHECK BATTERY SUPPLY		
	• Pull headlamp switch to PARK position. • Rotate the headlamp switch knob and shaft fully counterclockwise without turning on interior lamps. • Disconnect illumination connector to affected control (instrument cluster illumination connector C250, climate control illumination connector C298 or audio system illumination connector C257 [C211 with premium sound]). • Test for battery voltage at Circuit 19 (LB/R). • **Is battery voltage present?**	Yes ▶ No ▶	GO to **A2**. SERVICE open or ground short in Circuit 19 (LB/R). RETEST system.

DIAGNOSIS AND TESTING (Continued)

PINPOINT TEST A: CONTROL ILLUMINATION INOPERATIVE (Continued)

Test Step		Result ▶	Action to Take
A2	CHECK GROUND CIRCUIT 57 (BK)		
	• Check continuity to ground at Circuit 57 (BK) at affected control illumination connector (instrument cluster illumination connector C250, climate control illumination connector C298 or audio system illumination connector C257 [C211 with premium sound]). • **Is continuity present?**	Yes ▶ No ▶	REPLACE bulb. RESTORE vehicle. RETEST system. SERVICE open in Circuit 57 (BK). RESTORE vehicle. RETEST system.

PINPOINT TEST B: INSTRUMENT PANEL ILLUMINATION DOES NOT DIM

Test Step		Result ▶	Action to Take
B1	TEST HEADLAMP SWITCH MOUNTING		
	• Rotate headlamp switch knob and shaft from fully counterclockwise to fully clockwise. • **Is headlamp switch mounted securely?**	Yes ▶ No ▶	REPLACE headlamp switch. RETEST system. MOUNT headlamp switch securely. RETEST system.

PINPOINT TEST C: INSTRUMENT CLUSTER ILLUMINATION INOPERATIVE

Test Step		Result ▶	Action to Take
C1	CHECK BATTERY VOLTAGE SUPPLY		
	• Pull headlamp switch into PARK position. • Rotate headlamp switch knob and shaft fully clockwise without turning on courtesy lamps. • Measure voltage with Rotunda 73 Digital Multimeter 105-R0051 or equivalent Circuit 19 (LB/R) at IP fuse panel. • **Is battery voltage present?**	Yes ▶ No ▶	TURN headlamp switch to OFF position. GO to **C3**. GO to **C2**.
C2	MEASURE VOLTAGE		
	• Measure voltage at feed side of instrument panel fuse. • **Is battery voltage present?**	Yes ▶ No ▶	REPLACE fuse. RESTORE vehicle. RETEST system. SERVICE open or ground short in IP fuse panel battery feed. RESTORE vehicle. RETEST system.
C3	CHECK CIRCUIT 19 (LB/R)		
	• Disconnect instrument cluster connector C250. • Check resistance of Circuit 19 (LB/R) with Rotunda 73 Digital Multimeter 105-R0051 or equivalent between instrument cluster connector C250 and instrument panel fuse. • **Is continuity present?**	Yes ▶ No ▶	GO to **C4**. SERVICE open in Circuit 19 (LB/R). RESTORE vehicle. RETEST system.
C4	CHECK INSTRUMENT CLUSTER GROUND		
	• Disconnect instrument cluster connector C250. • Test continuity to ground at Circuit 57 (BK) at connector C250. • **Is continuity OK?**	Yes ▶ No ▶	REPLACE instrument cluster printed circuit. RESTORE vehicle. RETEST system. REPAIR open in Circuit 57 (BK). RESTORE vehicle. RETEST system.

PINPOINT TEST D: AUDIO SYSTEM ILLUMINATION INOPERATIVE

Test Step		Result ▶	Action to Take
D1	CHECK BATTERY SUPPLY		
	• Pull headlamp switch to PARK position. • Rotate the headlamp switch knob and shaft fully counterclockwise without turning on interior lamps. • Disconnect audio system illumination connector C257 (C211 with premium sound). • Test for battery voltage at Circuit 19 (LB/R). • **Is battery voltage present?**	Yes ▶ No ▶	GO to **D2**. SERVICE open or ground short in Circuit 19 (LB/R). RETEST system.

Ford Motor Company Licensed Product

DIAGNOSIS AND TESTING (Continued)

PINPOINT TEST D: AUDIO SYSTEM ILLUMINATION INOPERATIVE (Continued)

Test Step		Result	Action to Take
D2	CHECK GROUND CIRCUIT		
	• Check continuity to ground at Circuit 57 (BK) of audio system illumination connector C257 (C211 with premium sound). • **Is continuity present?**	Yes ▶	REPLACE bulb. RESTORE vehicle. RETEST system.
		No ▶	SERVICE open in ground circuit. RESTORE vehicle. RETEST system.

REMOVAL AND INSTALLATION

Instrument Cluster Lamps

Bulbs, Miniature

Refer to Section 13-01.

Audio System Lamps

Bulbs, Miniature

Refer to Section 15-01.

Climate Control Lamps

Bulbs, Miniature

Removal

1. Remove climate control assembly. Refer to Section 12-03A.
2. Carefully twist and pull bulb away from climate control assembly.

Installation

1. Follow removal procedures in reverse order.

SPECIAL SERVICE TOOLS/EQUIPMENT

ROTUNDA EQUIPMENT

Model	Description
105-R0051	73 Digital Multimeter

Official Licensed Product
Ford Motor Company

SECTION 13-01 Instrument Cluster, Conventional

SUBJECT	PAGE
VEHICLE APPLICATION	13-01-1
DESCRIPTION AND OPERATION	
Charge Indication System	13-01-7
Battery Voltage Gauge	13-01-7
Charging System Warning	13-01-7
Coolant Temperature Indication System	13-01-6
Instrument Cluster Temperature Gauge	13-01-6
Fuel Level Indication System	13-01-4
Fuel Gauge	13-01-4
Fuel Sending Unit	13-01-4
Fuel Tank Selector Switch	13-01-6
High Coolant Temperature Warning	13-01-6
Water Temperature Indicator Sender Unit	13-01-7
Instrument Cluster	13-01-1
Instrument Cluster Display Proveout	13-01-3
Printed Circuit	13-01-3
Odometer Replacement	13-01-8
Oil Pressure Indication System	13-01-7
Oil Pressure Gauge	13-01-7
Oil Pressure Switch	13-01-7
Programmable Speedometer/Odometer Module (PSOM)	13-01-8
Speedometer	13-01-7
Tachometer (if So Equipped)	13-01-9
Transmission Control Selector Indicator	13-01-9
Trip Odometer	13-01-8
Warning Indicators	13-01-9
4x4 High Range	13-01-9
4x4 Low Range	13-01-9
Brake System	13-01-9
Charging System	13-01-9
Check Engine (MIL)	13-01-9
Fuel Filter, 7.3L Diesel	13-01-10
Fuel Reset	13-01-10
High Beam	13-01-9
LH/RH Turn	13-01-9

SUBJECT	PAGE
DESCRIPTION AND OPERATION (Cont'd.)	
Overdrive/Overdrive Off	13-01-9
Safety Belt	13-01-9
Wait to Start, 7.3L Diesel	13-01-10
Water in Fuel, 7.3L Diesel	13-01-10
DIAGNOSIS AND TESTING	
Electrical Schematic Reference(s)	13-01-10
Instrument Cluster	13-01-10
Component Tests	13-01-28
Battery Voltage Gauge	13-01-29
Charge Indicator Lamp System	13-01-29
Coolant Temperature Gauge	13-01-28
Fuel Gauge, F-250, F-350	13-01-28
Fuel Tank Damage	13-01-28
Fuel Tank Second Sending Unit Test, Dual Tanks	13-01-28
Fuel Tank Sending Unit	13-01-28
Oil Pressure Sender	13-01-29
Inspection and Verification	13-01-10
Pinpoint Tests	13-01-12
Symptom Chart	13-01-10
REMOVAL AND INSTALLATION	
Automatic Transmission Selector Indicator	13-01-32
Battery Voltage Gauge	13-01-32
Fuel Gauge	13-01-31
Indicator/Warning Bulbs	13-01-33
Instrument Cluster	13-01-29
Instrument Cluster Temperature Gauge	13-01-31
Oil Pressure Gauge	13-01-31
Tachometer	13-01-32
DISASSEMBLY AND ASSEMBLY	
Instrument Cluster	13-01-34
CLEANING AND INSPECTION	
Instrument Cluster Lenses	13-01-34
SPECIFICATIONS	13-01-35
SPECIAL SERVICE TOOLS/EQUIPMENT	13-01-36

VEHICLE APPLICATION

F-250 Heavy Duty, F-350 and F-Super Duty Motorhome Chassis

DESCRIPTION AND OPERATION

Instrument Cluster

The cluster warning lamps are located in two vertical columns, one on each side of the instrument cluster (10849), and also along the bottom of the instrument cluster. F-Series optional instrument clusters have the warning lights along the right-hand side and bottom of the instrument cluster.

DESCRIPTION AND OPERATION (Continued)

Base Cluster, F-250 Heavy Duty, F-350 and F-Super Duty

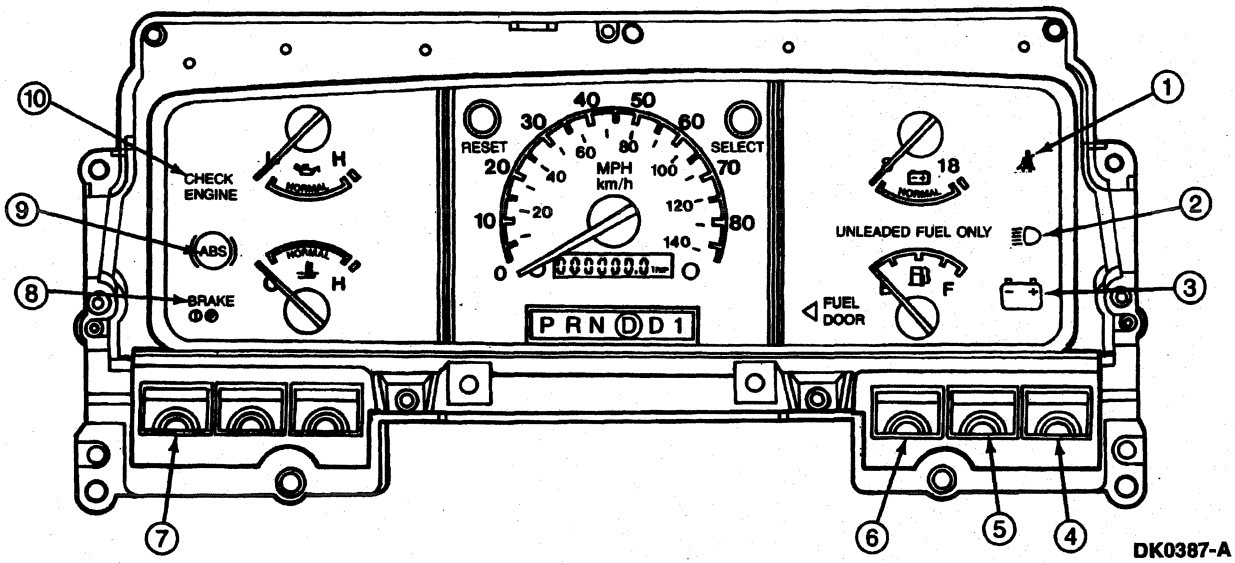

Item	Part Number	Description
1	—	Fasten Safety Belt Indicator (Part of 10849)
2	—	High Beam Indicator (Part of 10849)
3	—	Charging System Indicator (Part of 10849)
4	—	Turn Signal Indicator (Part of 10849) (RH)
5	—	4x4 High Range (Part of 10849)

Item	Part Number	Description
6	—	Low Range Indicator (Part of 10849)
7	—	Turn Signal Indicator (Part of 10849) (LH)
8	—	Brake Indicator (Part of 10849)
9	—	ABS Indicator (Part of 10849)
10	—	Check Engine Indicator (Part of 10849)

(Continued)

Ford Motor Company Special Licensed Publication

DESCRIPTION AND OPERATION (Continued)

Optional Cluster, F-250 Heavy Duty, F-350, F-Super Duty and F-Super Duty Motorhome

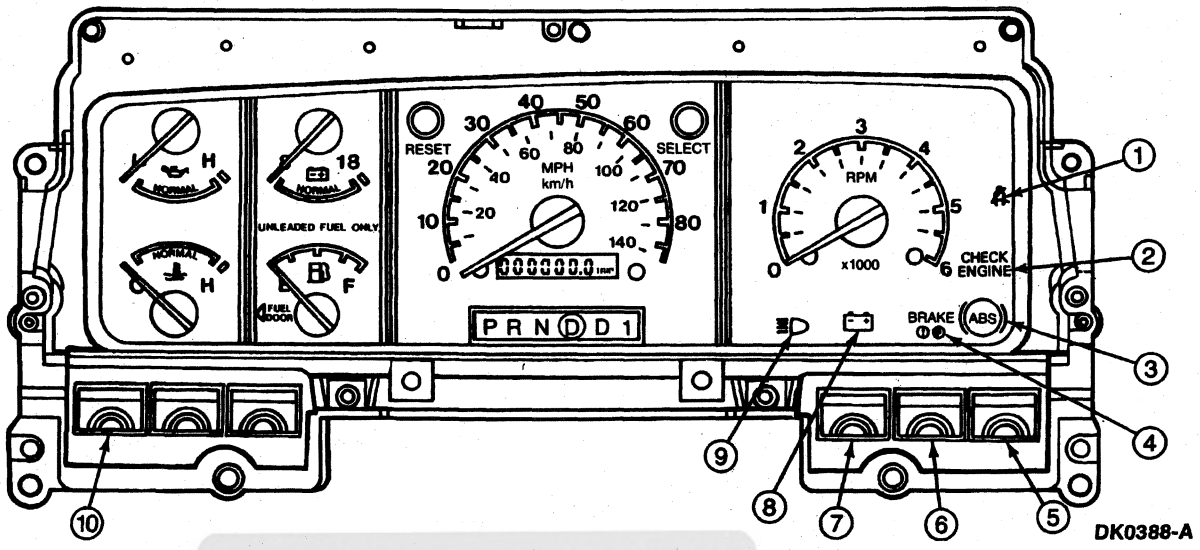

Item	Part Number	Description
1	—	Fasten Safety Belt Indicator (Part of 10849)
2	—	Check Engine Indicator (Part of 10849)
3	—	ABS Indicator (Part of 10849)
4	—	Brake Indicator (Part of 10849)
5	—	Turn Signal Indicator (Part of 10849) (RH)

Item	Part Number	Description
6	—	4x4 High Range (4-Wheel Drive Only)
7	—	Low Range (4-Wheel Drive Only)
8	—	Charging System Indicator (Part of 10849)
9	—	High Beam Indicator (Part of 10849)
10	—	Turn Signal Indicator (Part of 10849) (LH)

(Continued)

Instrument Cluster Display Proveout

When the key is turned to RUN, the following warning lamps will prove out by momentarily lighting.

- safety belt
- charging system
- brake system
- anti-lock brake
- check engine lamp

Printed Circuit

The instrument cluster printed circuit (10K843), which supplies current to the instrument panel indicators, gauges, and some clocks, is made of copper foil that is bonded to a polyester base film (usually referred to as Mylar®).

The instrument cluster printed circuit is mounted to the cluster housing and, due to its location, cannot be easily inspected or tested in the vehicle. This makes the instrument cluster printed circuit vulnerable to damage when a probe is used for in-vehicle testing, as the probe can pierce the instrument cluster printed circuit or, in some cases, burn the copper conductor.

Since there is no approved procedure for in-vehicle testing of the instrument cluster printed circuit, it must be removed for visual inspection. If no visual damage is evident, each circuit should be tested with an ohmmeter. If an open circuit or short is detected, the instrument cluster printed circuit must be replaced.

DESCRIPTION AND OPERATION (Continued)

Fuel Level Indication System

The fuel level indicating system is a magnetic gauge system. It consists of a magnetic fuel gauge mounted in the instrument cluster (10849) and a fuel tank sending unit located in the fuel tank (9002).

Fuel Level Indication System, Gasoline Engine

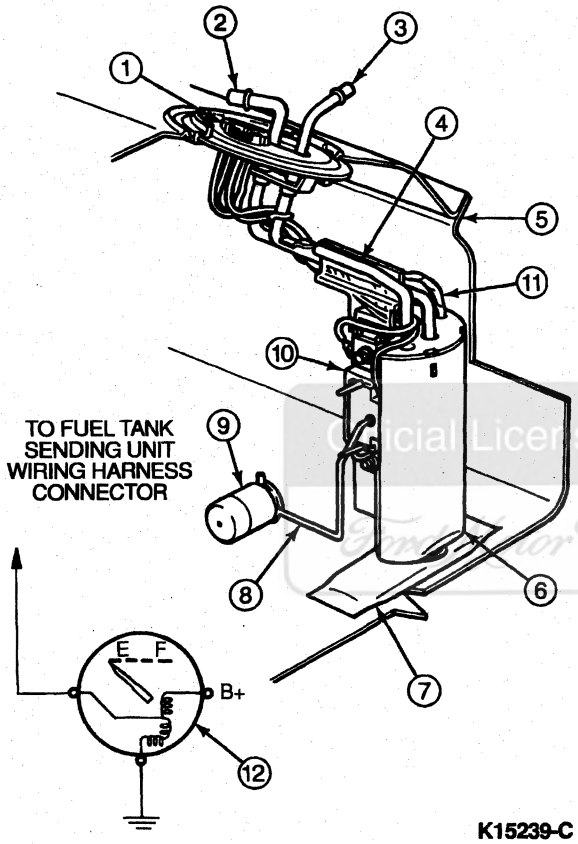

K15239-C

Item	Part Number	Description
1	—	Wiring Harness Connector (Part of 9275)
2	—	Fuel Supply Tube (Part of 9275)
3	—	Fuel Return Tube (Part of 9275)
4	—	Support Rod (Part of 9275)
5	9002	Fuel Tank
6	—	Fuel Delivery Module (Part of 9002)
7	—	Venturi Filter Screen (Part of 9002)
8	—	Sender Float Arm (Part of 9275)
9	—	Sender Float (Part of 9275)
10	—	Resistor Assy (Part of 9275)
11	—	High-Pressure Pump Wiring (Part of 9002)
12	10883	Fuel Gauge

(Continued)

Fuel Gauge

The magnetic gauge movement consists of three primary coils, one of which is wound at a 90-degree angle to the other two. The coils form a magnetic field that varies in direction according to the variable resistance of the sender unit that is connected between two of them. A primary magnet, to which a shaft and pointer are attached, rotates to align to this primary field, resulting in pointer position. The bobbin / coil assembly is pressed into a metal housing that has two holes for dial mounting. There is no adjustment, calibration or maintenance required for this gauge.

Fuel Sending Unit

The fuel tank sending unit consists of a variable screened resistor made up of a ceramic substrate. It is controlled by the action of an attached float in the fuel tank. When the fuel level is low, resistance in the fuel tank sending unit is low. When the fuel level is high, the resistance in the fuel tank sending unit is high. As the float moves from empty to full, the resistance will gradually and continuously increase.

The electronic fuel delivery system is used on the 5.8L and 7.5L multiport fuel injection (MFI) engines and uses a fuel delivery module (FDM) assembly. The FDM unit includes a high-pressure fuel pump, venturi jet pump, supply check valve, and a shuttle selector valve all located internally in the module, which acts as a reservoir mounted from the fuel tank sending unit flange. The fuel tank sending unit attached to the reservoir body is a separately serviceable component.

In addition, the FDM system achieves a significant reduction in fuel system complexity and simplifies fuel line routing. The in-line fuel filter is located on the left-hand frame rail to provide service access.

The fuel level sensor (9275) for the 7.3L diesel engine operates the same as that described for the MFI engines, except for the following differences:

- The sender electrical connector has two pins instead of four.
- The venturi filter screen is replaced by an inverted flexible cone-like member.
- The flexible cone makes sure fuel is always being taken from the bottom of the fuel tank.
- The cone has as part of its assembly a relief-bypass valve.
- If the intake becomes obstructed at low temperatures, the relief valve opens, allowing fuel to bypass the filter.

DESCRIPTION AND OPERATION (Continued)

The fuel tank sending units used with all engines have a fuel return port that allows excess fuel delivered to the engine to be returned to the fuel tank.

Fuel Level Sensor, Diesel Engine

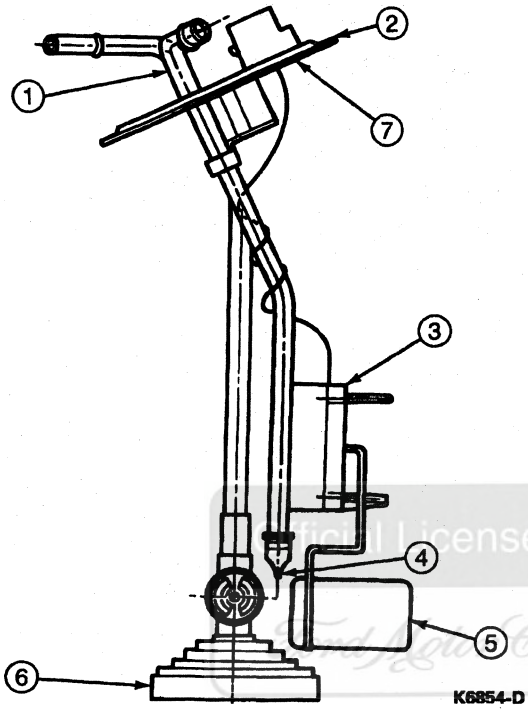

Item	Part Number	Description
1	—	Fuel Line Assy (Part of 9275)
2	9275	Fuel Level Sensor
3	—	Variable Resistor (Part of 9275)
4	—	Nipple (Part of 9275)
5	—	Float (Part of 9275)
6	—	Filter Assy (Part of 9275)
7	—	Surface B (Part of 9275)

(Continued)

Official Licensed Product Ford Motor Company

DESCRIPTION AND OPERATION (Continued)

Fuel Level Sensor, Gasoline Engine

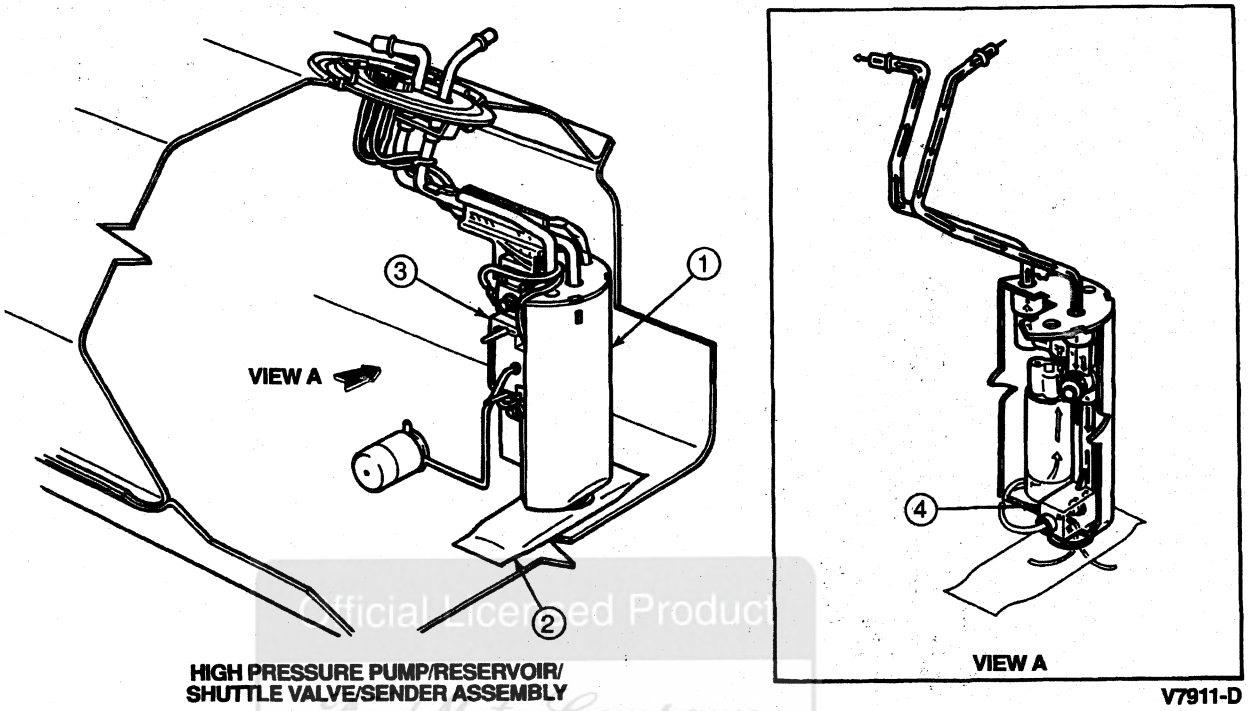

HIGH PRESSURE PUMP/RESERVOIR/ SHUTTLE VALVE/SENDER ASSEMBLY

V7911-D

Item	Part Number	Description
1	—	Fuel Delivery Module (Part of 9H307)
2	—	In-Tank Venturi Filter (Part of 9H307)

Item	Part Number	Description
3	9A299	Resistor Assy
4	—	High-Pressure Pump (Part of 9H307)

(Continued)

Official Licensed Product Ford Motor Company

Fuel Tank Selector Switch

All fuel gauge sensing on vehicles with dual fuel tanks (except with 7.3L diesel engine (6007)) passes through the fuel tank selector switch.

Coolant Temperature Indication System

The engine coolant temperature indication system is a magnetic gauge system. It consists of a magnetic engine coolant temperature gauge mounted in the instrument cluster (10849) and an engine coolant temperature sender unit.

Instrument Cluster Temperature Gauge

The temperature gauge is a magnetic gauge movement consisting of three primary coils, one of which is wound at a 90-degree angle to the other two. The coils form a magnetic field which varies in direction according to the variable resistance of the engine coolant temperature sender unit. A primary magnet, to which a shaft and pointer are attached, rotates to align to this primary field, resulting in pointer position. The bobbin / coil assembly is pressed into a metal housing that has two holes for dial mounting. There is no adjustment, calibration or maintenance required for this gauge.

High Coolant Temperature Warning

The diesel engine's coolant temperature gauge uses an overheat switch that closes at approximately 116°C (241°F), illuminating the engine warning indicator.

DESCRIPTION AND OPERATION (Continued)

Water Temperature Indicator Sender Unit

When the engine coolant temperature is low, the resistance of the engine coolant temperature sender unit is high, restricting the flow of current through the gauge, and moving the pointer only a short distance. As the coolant temperature increases, the resistance of the engine coolant temperature sender unit decreases, causing a proportionately increased flow of current through the engine coolant temperature sender unit and a corresponding movement of the pointer.

Oil Pressure Indication System

The oil pressure indication system consists of an oil pressure gauge and an oil pressure switch.

Oil Pressure Gauge

The oil pressure gauge is a magnetic movement design consisting of a bobbin / coil assembly, a return to zero magnet and a primary magnet. The shaft and pointer are connected to the primary magnet. The bobbin / coil assembly is pressed into a metal housing which has two holes for dial mounting.

The gauge operates through a pressure-activated switch. When the engine is started engine oil pressure closes the switch, providing a ground circuit for the gauge coil. Current flow through the gauge coil to ground causes the primary magnet and pointer to rotate, providing an oil pressure reading on the dial face.

The oil pressure gauge does not require adjustment, calibration or maintenance. Also, never remove the pointer indicator from its shaft.

Oil Pressure Switch

The oil pressure switch controls the magnetic oil pressure gauge's pointer position. The oil pressure switch closes under normal engine operating conditions (oil pressure above 42 kPa). The oil pressure switch opens with the engine (6007) off and no oil pressure.

Charge Indication System

With the key in START or RUN, the battery voltage gauge measures the vehicle voltage to indicate the battery state of charge.

Battery Voltage Gauge

The battery voltage gauge is a gauge which measures the voltage potential at the battery to indicate the battery state of charge. The magnetic gauge consists of three primary coils, one of which is wound at a 90-degree angle to the other two. The coils form a magnetic field that varies in direction according to the vehicle voltage.

A primary magnet, to which a shaft and pointer are attached, rotates to align to this primary field, resulting in pointer position. The bobbin / coil assembly is pressed into a metal housing that has two holes for dial mounting. There is no maintenance required for this gauge.

Charging System Warning

With the key in START or RUN, battery voltage is present at the charge indicator. If the generator (GEN)(10346) is not generating power, the voltage regulator inside the generator grounds the charge indicator through Circuit 904 (LG / R). The charge indicator illuminates.

When the generator is generating power, the voltage regulator inside the generator applies battery voltage to the charge indicator through Circuit 904 (LG / R). With battery voltage present at both ends of the charge indicator, there is no current flow and the charge indicator does not illuminate.

Speedometer

NOTE: The symbol KM / H signifies a metric speed display and the symbol MPH signifies an English unit speed display.

The speedometer display:

- Provides speed information based on a speed / distance pulse signal (specific number of pulses per mile) from the axle-mounted anti-lock brake sensor.
- Is limited to a maximum of 140 km / h (80 mph).

DESCRIPTION AND OPERATION (Continued)

Odometer Replacement

NOTE: Federal law requires that the odometer in any replacement speedometer must register the same mileage as that registered on the removed speedometer / odometer. Service replacement speedometer / odometer and odometer modules with the mileage preset to actual vehicle mileage are available through Ford Electronic Service Centers. In nearly all instances, the mileage continues to accumulate in the odometer memory even if the odometer does not display mileage. This mileage can usually be verified by the electronic service centers. Contact the service center to receive a replacement speedometer / odometer or odometer module with the mileage preset to actual mileage.

If the actual vehicle mileage cannot be verified, the service center will supply a speedometer / odometer module with the odometer display preset to zero (0) miles and the service odometer segment (s) illuminated in the vicinity of the odometer display. In addition, an odometer mileage sticker is supplied with the replacement odometer. This sticker must display the estimated vehicle mileage and is to be affixed to the driver door.

NOTE: Before ordering an instrument cluster (10849), contact the instrument cluster technical hotline for diagnostic and system troubleshooting assistance. The hotline phone number is:

U.S. 1-800-461-6945

Canada 1-416-470-5728

The speedometer is also used to provide a speed signal for correct operation of the vehicle's powertrain control module (PCM)(12A650), transmission (7003), and speed control (if so equipped). Because of this, it is very important to change the speedometer's internal conversion constant if the size of tires on the vehicle is changed. Changing the conversion constant to the proper value when the tires are changed will also make sure that the speedometer retains the original factory-set accuracy. The conversion constant can only be changed six times once the vehicle leaves the factory. On F-Super Duty Motorhome, the conversion constant must never be changed. If tires or rear axle ratio are changed, the gear in the transmission drive gear must be changed.

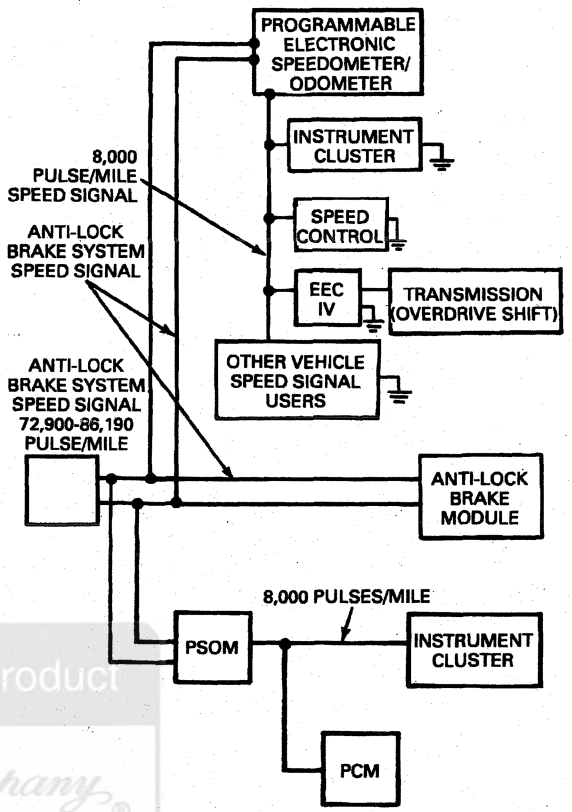

K17799-C

The liquid crystal display (LCD) odometer is a combination trip odometer and total odometer. The total odometer is normally displayed. To see the trip odometer, press and release the SELECT button on the upper right side of the speedometer. To zero out the trip odometer, press and release the RESET button on the upper left side of the speedometer while the trip odometer is displayed. If the trip odometer is displayed, press and release the SELECT button to return the display to the total odometer value. The speedometer, containing the trip odometer and total mileage odometer, is serviceable only as an assembly.

Programmable Speedometer / Odometer Module (PSOM)

The programmable electric analog speedometer receives its input from the anti-lock brake sensor except on F-Super Duty Motorhome where it receives its input from the parking brake-mounted speed sensor.

Trip Odometer

The liquid crystal display (LCD) odometer is a combination trip odometer and total odometer. The total odometer is normally displayed. Press and release the SELECT button to see the trip odometer. To zero out the trip odometer, press and release the RESET button. If the trip odometer is displayed, press and release the SELECT button to return the display to the total odometer value.

Licensed Product Ford Motor Company

DESCRIPTION AND OPERATION (Continued)

Tachometer (if So Equipped)

The tachometer (17360) is an electrically operated gauge that indicates engine speed in rpm. In vehicles with gasoline engines (6007), the tachometer receives its voltage pulses from the ignition coil when the engine is running. In vehicles with diesel engines, the engine's speed is indicated by the engine rpm sensor.

Transmission Control Selector Indicator

The transmission range selector indicator is located below the speedometer for vehicles with automatic transmissions. A transmission control selector indicator opening cover (7B100) covers the window for manual transmissions.

Warning Indicators

Brake System

All vehicles use a brake warning light in the instrument cluster (10849) to warn of system malfunctions. The red warning light for the brakes can indicate three conditions:

- The parking brake is not fully released.
- The brake fluid level is low in the master cylinder reservoir.
- The vacuum pressure is low on diesel engine vehicles.

Rear Anti-Lock Brakes

The yellow anti-lock brake indicator lights up for approximately two seconds when the key is first moved to RUN or START for circuit proveout. The indicator also lights up when the RABS module detects a malfunction in the system.

The self-test feature contains codes that indicate the area of the malfunction. When a malfunction is detected, the RABS control module shuts down the system and the yellow anti-lock warning indicator comes on. This permits normal braking. A code can be retrieved by momentarily grounding the diagnostic pigtail (black with orange stripe wire) after it is disconnected from KAM (keep-alive power red wire) and counting the flashes of the yellow ABS lamp. To make sure the diagnostic trouble code (DTC) is not lost from memory, the key must be left in the RUN position before the diagnostic lead is disconnected from KAM power. If more than one diagnostic trouble code exists, only the first code stored will be displayed. Additional codes will be output only after the first fault is corrected.

Check Engine (MIL)

The check engine warning indicator comes on when the electronic engine control system is not working properly.

The CHECK ENGINE warning indicator comes on briefly when the key is turned to RUN, and should turn off when the engine (6007) starts. If the CHECK ENGINE warning indicator does not come on when the key is turned to RUN or if it comes on while the vehicle is moving, the system is malfunctioning.

NOTE: If the vehicle is equipped with dual fuel tanks (9002), the CHECK ENGINE light may come on if fuel is restricted to the engine or if the fuel flow is momentarily disrupted because of an empty fuel tank before switching to the auxiliary fuel tank. This condition is normal and the CHECK ENGINE light should go off sometime after fuel flow is restored.

Charging System

The charge indicator lights if the voltage in the integral generator drops below a preset level while the key is in RUN.

The charge indicator light comes on every time the key is turned to RUN or START. The light should go off when the engine starts and the generator (GEN)(10346) begins to charge.

Safety Belt

The safety belt warning light reminds the driver to fasten safety belt. Each time the key is turned to RUN, the warning light will come on for a short time to remind the driver to fasten the safety belt.

High Beam

The high beam indicator comes on when the headlamps are turned on high beam or when the headlamps are flashed, and indicates that the headlights are illuminated at reduced intensity for daytime running lamps.

LH/RH Turn

The LH/RH turn signal indicators are located in the instrument cluster. If the turn signal indicator light in the instrument cluster does not illuminate or remains on (does not flash) when a turn is signaled, the turn signaling system is malfunctioning.

Overdrive/Overdrive Off

The OVERDRIVE OFF indicator lights when the transmission is locked out of OVERDRIVE. This is done by pressing the switch button in the end of the gear selector lever.

4x4 High Range

When the 4-wheel drive high range is engaged, the switch closes at first contact and the 4x4 HIGH RANGE lamp illuminates. When the low range is engaged, the switch closes a second contact and the low range bulb illuminates at the same time as the 4x4 LOW RANGE lamp illuminates.

4x4 Low Range

The 4x4 low and high lamp circuit consists of two indicator lamps located on the instrument cluster and a switch located in the transfer case. One lamp indicates when the vehicle is in the 4-wheel drive high range position (4H) and one lamp indicates when the vehicle is in the 4-wheel drive position (4L).

Official Licensed Product Ford Motor Company

DESCRIPTION AND OPERATION (Continued)

Fuel Filter, 7.3L Diesel

The 7.3L diesel engine is equipped with a fuel filter restriction sensor. A restriction indicator light is provided on the instrument panel (04320) warning lamp module to alert the operator.

If the restriction indicator light goes on during normal operation, the fuel filter should be changed as soon as practical.

Water in Fuel, 7.3L Diesel

During refueling it is possible for water-contaminated diesel fuel to be pumped into the fuel tank. The 7.3L diesel fuel system is equipped with a fuel filter / heater / water separator to remove water from the fuel. The WATER IN FUEL light in the warning lamp module will glow when the fuel filter / heater / water separator has a significant quantity of water, or when the key is switched to the START position (light function check). If the light glows red while the engine is running, the engine should be stopped as soon as safely possible, the engine shut off and the fuel filter / water separator drained.

WARNING: DO NOT DRAIN WATER SEPARATOR WHILE ENGINE IS RUNNING. FUEL MAY IGNITE IF SEPARATOR IS DRAINED WHILE ENGINE IS RUNNING OR VEHICLE IS MOVING. REFER TO OWNER GUIDE BOOKLET FOR WATER SEPARATOR DRAIN PROCEDURES.

CAUTION: Allowing water to stay in the fuel system can result in extensive damage to, or failure of, the fuel injection system.

Fuel Reset

If the engine cranks but does not start or does not start after a collision, the inertia fuel shutoff switch (IFS switch)(9341) may be triggered. The inertia fuel shutoff switch is a device intended to automatically stop the flow of fuel to the engine when the vehicle has been involved in a collision. The impact does not have to be great for the inertia fuel shutoff switch to be triggered. Minor parking lot bumping and severe road impacts (such as potholes) may trigger the inertia fuel shutoff switch even when there is no apparent body damage.

WARNING: IF YOU SEE OR SMELL FUEL, DO NOT RESET THE INERTIA FUEL SHUTOFF SWITCH OR TRY TO START THE VEHICLE. YOU COULD INJURE YOURSELF OR OTHERS. HAVE ALL PASSENGERS GET OUT OF THE VEHICLE AND CALL THE LOCAL FIRE DEPARTMENT OR A TOWING SERVICE.

Once the inertia fuel shutoff switch is triggered, the switch must be reset by hand before the vehicle can be started. Refer to the Owner Guide for further information.

Wait to Start, 7.3L Diesel

With the key in the RUN position, the WAIT TO START indicator will light within the diesel warning lamp module if glow plug heat is necessary as a starting aid. The operator should wait until the light goes off before starting. If the indicator does not light, the engine may be started immediately. Refer to the Owner Guide for further information. After the engine starts, the indicator light will turn off.

The WAIT TO START light should always come on at least momentarily when the engine is cold and the key is first switched to RUN. If it does not, the glow plug system should be checked and serviced promptly to avoid difficult cold starting.

DIAGNOSIS AND TESTING

Electrical Schematic Reference(s)

Refer to Electrical and Vacuum Troubleshooting Manual, Cell 60, Instrument Cluster for schematic and connector information.

Instrument Cluster

Inspection and Verification

Visually inspect the components. Check for damaged components, blown fuses, loose or corroded connections. Check the wiring harness for obvious signs of shorts, opens, bad connections or damage.

Verify circuit operation. Verify speedometer and odometer operation by road testing the vehicle.

Possible malfunctions of the PSOM are:

- Inoperative speedometer or odometer. Refer to Pinpoint Test G.
- Improper operation, such as an erratic, jumpy or hesitating speedometer or scrambled digits on the odometer. Refer to Pinpoint Test H.
- Inaccuracy concerns, such as the odometer not indicating the proper mileage after traveling a known distance or the speedometer higher or lower than expected to travel a known distance in the proper amount of time. Refer to Pinpoint Test F.
- Loss of speed output signal to the powertrain control module, transmission or speed control. Refer to Pinpoint Test J.

Symptom Chart

Refer to the Electrical and Vacuum Troubleshooting Manual for the connector numbers in the pinpoint tests.

Licensed Product

DIAGNOSIS AND TESTING (Continued)

NOTE: Use Rotunda 88 Digital Multimeter 105-00053 or equivalent to perform Pinpoint Tests.

CONVENTIONAL INSTRUMENT CLUSTER

Condition	Possible Source	Action
• Fuel Level Always Reads Empty	• Circuit. • Fuel level sensor. • Fuel gauge.	• GO to Pinpoint Test A.
• Fuel Level Reads Inaccurately	• Circuit. • Fuel Level sensor. • Fuel gauge.	• GO to Pinpoint Test A.
• Fuel Level Always Reads Full	• Circuit. • Fuel level sensor. • Fuel gauge.	• GO to Pinpoint Test A.
• No Fuel Level Indication — Vehicles with Dual Tanks	• Fuse. • Circuit. • Switch. • Fuel gauge. • Fuel level sensor.	• GO to Pinpoint Test B.
• Coolant Temperature Always Reads Cold	• Circuit. • Coolant sensor. • Temperature gauge.	• GO to Pinpoint Test C.
• Coolant Temperature Always Reads Hot	• Circuit. • Coolant sensor. • Temperature gauge. • Low coolant. • Engine.	• GO to Pinpoint Test C.
• Coolant Temperature Reads Inaccurately	• Circuit. • Coolant sensor. • Temperature gauge.	• GO to Pinpoint Test C.
• Oil Pressure Always Reads Low	• Circuit. • Oil pressure. • Sensor. • Oil pressure gauge.	• GO to Pinpoint Test D.
• Oil Pressure Always Reads High	• Circuit. • Oil. • Pressure sensor. • Oil pressure gauge.	• GO to Pinpoint Test D.
• Oil Pressure Reads Inaccurately	• Circuit. • Oil pressure sensor. • Oil pressure gauge.	• GO to Pinpoint Test D.
• Charge Indication Reads Inaccurately	• Circuit. • Bulb. • Voltage gauge.	• GO to Pinpoint Test E.
• Speedometer / Odometer Reads Inaccurately	• Circuit. • Sensor. • PSOM. • Speedometer.	• GO to Pinpoint Test F.
• Speedometer / Odometer Inoperative	• Circuit. • Sensor. • PSOM. • Speedometer / odometer.	• GO to Pinpoint Test G.
• Speedometer / Odometer Improper Operation	• Circuit. • Sensor. • PSOM. • Speedometer / odometer.	• GO to Pinpoint Test H.
• Speed Control, PCM or Electronic Transmission Display Inoperative or Erratic	• Circuit. • PSOM.	• GO to Pinpoint Test J.
• Tachometer Inoperative, Diesel Engine	• Circuit. • Sensor. • Tachometer.	• GO to Pinpoint Test K.

Official Licensed Product
Ford Motor Company

DIAGNOSIS AND TESTING (Continued)

CONVENTIONAL INSTRUMENT CLUSTER (Continued)

Condition	Possible Source	Action
• Tachometer Not Reflecting Engine Speed, Diesel Engine	• Circuit. • Sensor. • Tachometer.	• GO to Pinpoint Test K.
• Tachometer Inoperative, Gasoline Engine	• Circuit. • Sensor.	• GO to Pinpoint Test L.
• Tachometer Not Reflecting Engine Speed, Gasoline Engine	• Circuit. • Sensor.	• GO to Pinpoint Test L.
• All Warning Indicators Inoperative	• Fuse. • Circuit. • Bulbs.	• GO to Pinpoint Test M.
• Brake Warning Never / Always On	• Circuit. • Bulb. • Brake fluid level sensor. • Brake pedal switch.	• GO to Pinpoint Test N.
• Charge System Warning Never / Always On	• Fuse. • Circuit. • Bulb.	• GO to Pinpoint Test P.
• Anti-Lock Warning Never / Always On	—	• REFER to Section 06-09.
• Turn and High Beam Indicators Never On	—	• REFER to Section 17-01.
• LH Turn Indicator Never / Always On	—	• REFER to Section 17-01.
• RH Turn Indicator Never / Always On	—	• REFER to Section 17-01.
• High Beam Warning Never / Always On	• Circuit. • Bulb. • Switch.	• GO to Pinpoint Test Q.
• Malfunction Indicator Lamp Never / Always On	• Circuit. • Bulb. • Switch.	• REFER to 1996 Powertrain Control / Emissions Diagnosis Manual[1].
• Safety Belt Warning Never / Always On	• Circuit. • Bulb. • Switch.	• GO to Pinpoint Test R.
• Wait to Start Indicator Never / Always On, Diesel Engine	• Circuit. • Bulb. • PCM.	• REFER to Powertrain Control / Emissions Diagnosis Manual.[1]
• Engine Warning Indicator Never / Always On, Diesel Engine	• Circuit. • Bulb. • PCM.	• REFER to Powertrain Control / Emissions Diagnosis Manual.[1]
• Plugged Fuel Filter Indicator Never / Always On, Diesel Engine	• Circuit. • Bulb. • Fuel Filter.	• SERVICE or REPLACE as required.
• Water in Fuel Indicator Never / Always On, Diesel Engine	• Circuit. • Bulb. • Sensor.	• SERVICE or REPLACE as required.

Official Licensed Product Ford Motor Company

Pinpoint Tests

PINPOINT TEST A: FUEL LEVEL READS INACCURATELY

Test Step		Result ▶	Action to Take
A1	VERIFY POWER AT LOAD SIDE OF FUSE PANEL		
	• Key to RUN. • Using Rotunda 88 Digital Multimeter 105-00053 or equivalent, verify system voltage at the load side of fuse. • **Is the voltage greater than 10 volts?**	Yes ▶ No ▶	GO to **A3**. GO to **A2**.

1 Can be purchased as a separate item.

DIAGNOSIS AND TESTING (Continued)

PINPOINT TEST A: FUEL LEVEL READS INACCURATELY (Continued)

Test Step		Result ▶	Action to Take
A2	VERIFY POWER AT FEED SIDE OF FUSE PANEL		
	• Key to RUN. • Using Rotunda 88 Digital Multimeter 105-00053 or equivalent, verify system voltage at the feed side of the fuse. • **Is the voltage greater than 10 volts?**	Yes ▶ No ▶	REPLACE the fuse. SERVICE the wiring to the fuse panel.
A3	VERIFY POWER AT INSTRUMENT CLUSTER		
	• Have cluster connector(s) remain intact. • Partially remove the instrument cluster from the instrument panel. • Key to RUN. • Using Rotunda 88 Digital Multimeter 105-00053 or equivalent, measure the voltage on the ignition wire at the instrument cluster connector C250 to ground. • **Is the voltage greater than 10 volts?**	Yes ▶ No ▶	GO to **A4**. SERVICE the ignition wire.
A4	VERIFY GROUND CIRCUITRY AT CLUSTER		
	CAUTION: Before checking the continuity of any circuit, make sure there is no voltage present in the circuit prior to switching the test equipment to the resistance function, to avoid damage to equipment. Refer to the test equipment user's manual for additional information. • Using Rotunda 88 Digital Multimeter 105-00053 or equivalent, check the continuity of the ground wire at the instrument cluster connector C250 to ground. • **Is the resistance less than 1 ohm?**	Yes ▶ No ▶	GO to **A5**. SERVICE the wire to ground.
A5	CHECK FUEL GAUGE (EMPTY)		
	• Key off. • Disconnect the fuel gauge sending unit connector C440 (front) or C441 (rear). • Connect one lead of the Rotunda Instrument Gauge System Tester 014-R1063 or equivalent to the fuel level sensor input wire at the fuel tank sending unit connector and the other lead to ground. • Set the tester to 22 ohms. • Key to RUN. • Read the fuel gauge. • **Does the fuel gauge read E (empty)?**	Yes ▶ No ▶	GO to **A9**. GO to **A6**.
A6	RECHECK FUEL GAUGE (EMPTY)		
	• Key off. • Key to RUN. • Tap on the instrument panel. • Read the fuel gauge. • **Does the fuel gauge read E (empty)?**	Yes ▶ No ▶	Except F-Super Duty Motorhome: REPLACE instrument cluster. F-Super Duty Motorhome: GO to **A7**. GO to **A9**.
A7	CHECK PRINTED CIRCUIT BOARD		
	• Key off. • Disconnect instrument cluster connectors C250 and C251. • Measure the resistance of the circuit between the SIG terminal of the fuel gauge and instrument cluster connector C250, Pin 5 and instrument cluster connector C251, Pin 6. • **Is the resistance less than 1 ohm?**	Yes ▶ No ▶	GO to **A8**. REPLACE instrument cluster.
A8	CHECK FUEL GAUGE SENDING UNIT WIRE		
	• Key off. • Disconnect the instrument cluster connectors C250 and C251 and the fuel tank sending unit connector C440 (front) or C441 (rear). • Measure the resistance of the DB/Y wire (front) or Y/LB wire (rear) between the instrument cluster and the fuel level sensor. • **Is the resistance less than 5 ohms?**	Yes ▶ No ▶	GO to **A9**. SERVICE the DB/Y wire (front) or Y/LB (rear) wire between the instrument cluster and the fuel level sensor.

Ford Motor Company Product

DIAGNOSIS AND TESTING (Continued)

PINPOINT TEST A: FUEL LEVEL READS INACCURATELY (Continued)

	Test Step	Result ▶	Action to Take
A9	CHECK CHASSIS GROUND		
	• Key off. • Leave instrument cluster and fuel level sensor disconnected. • Measure the resistance of wire to chassis ground. • **Is the resistance less than 5 ohms?**	Yes ▶ No ▶	SERVICE short to chassis ground. GO to **A10**.
A10	CHECK FUEL TANK SENDING UNIT GROUND		
	• Key off. • Measure the resistance of the BK wire at the fuel level sensor connector C440 (front) or C441 (rear) to ground at battery. • **Is the resistance less than 1 ohm?**	Yes ▶ No ▶	GO to **A11**. SERVICE the BK wire from the fuel level sensor to ground.
A11	FUEL TANK INSPECTION		
	• Inspect fuel tank for distortion or damage. • **Is the fuel tank damaged?**	Yes ▶ No ▶	REPLACE fuel tank. REFER to Section 10-01A in the Powertrain, Drivetrain Manual. GO to **A12**.
A12	TEST BOX CHECK — EMPTY STOP		
	• Remove fuel tank sending unit from fuel tank. • Connect one lead of Rotunda 88 Digital Multimeter 105-00053 or equivalent to the fuel sender signal lead and the other lead to fuel level sensor ground. • Read multimeter when the float rod is against the empty stop (closest to fuel filter). • **Does the multimeter read 14-18 ohms?**	Yes ▶ No ▶	GO to **A13**. REPLACE fuel level sensor. REFER to Section 10-01A in the Powertrain, Drivetrain Manual.
A13	TEST BOX CHECK — FULL STOP		
	• Connect one lead of Rotunda 88 Digital Multimeter 105-00053 or equivalent to the fuel sender signal lead and the other lead to fuel level sensor ground. • Read multimeter when the float rod is against the full stop. • **Does the multimeter read 154-162 ohms?**	Yes ▶ No ▶	GO to **A14**. REPLACE fuel level sensor. REFER to Section 10-01A in the Powertrain, Drivetrain Manual.
A14	TEST BOX CHECK — FLOAT ROD TRAVEL		
	• Connect one lead of a Rotunda 88 Digital Multimeter 105-00053 or equivalent to the fuel sending signal lead and the other lead to fuel level sensor ground. • Move float rod slowly from FULL to EMPTY stop position. • **Does multimeter reading decrease slowly?**	Yes ▶ No ▶	GO to **A15**. REPLACE fuel level sensor. REFER to Section 10-01A in the Powertrain, Drivetrain Manual.
A15	HARNESS CONNECTOR CHECK — EMPTY STOP		
	• Reattach all fuel indication connectors. • Move float rod to empty stop position. • Key to RUN. • Read fuel gauge. • **Does gauge read E (empty)?**	Yes ▶ No ▶	GO to **A16**. GO to **A7**.
A16	HARNESS CONNECTOR CHECK — FULL STOP		
	• Move float rod to full stop position. • Key to RUN. • Read fuel gauge. • **Does gauge read F (full)?**	Yes ▶ No ▶	GO to **A17**. GO to **A7**.
A17	INSPECT FUEL SENDER		
	• Inspect float and float rod. • **Is float rod distorted, hitting filter, filled with fuel or loose on float rod?**	Yes ▶ No ▶	REPLACE fuel level sensor. REFER to Section 10-01A in the Powertrain, Drivetrain Manual. System OK.

Licensed Product

DIAGNOSIS AND TESTING (Continued)

PINPOINT TEST B: NO FUEL LEVEL INDICATION, VEHICLES WITH DUAL TANKS (6 PORT FUEL SELECTOR VALVE 7.3L DIESEL)

	Test Step	Result ▶	Action to Take
B1	BYPASS TANK SELECTOR VALVE		
	• Disconnect fuel tank selector valve connector C423. • Key to RUN. • Jumper connector terminals No. 6 and No. 5 for rear fuel tank. • Fuel gauge should indicate fuel level in rear fuel tank. • Move selector switch to front tank. • Jumper connector terminals No. 5 and No. 4 for front fuel tank. • Fuel gauge should indicate fuel level in front fuel tank. • **Does fuel gauge indicate fuel level in front and rear fuel tanks?**	Yes ▶ No ▶	REPLACE fuel tank selector valve. REFER to Section 10-01B in the Powertrain, Drivetrain Manual. CHECK for damaged fuel gauge, fuel level sensor or wiring. SERVICE or REPLACE as necessary.

PINPOINT TEST C: TEMPERATURE GAUGE INACCURATE/DOES NOT MOVE

	Test Step	Result ▶	Action to Take
C1	VERIFY POWER AT LOAD SIDE OF FUSE PANEL		
	• Key to RUN. Measure IP fuse No. 18 (15A) output, using Rotunda New Generation Star (NGS) Tester 007-00500 or equivalent. • **Does voltage read between 10 and 15 volts?**	Yes ▶ No ▶	GO to **C2**. REPLACE IP fuse No. 18 and RETEST.
C2	VERIFY POWER AT INSTRUMENT PANEL		
	• Key to RUN. • Measure voltage at Engine Coolant Temperature (ECT) Sensor input Circuit 640 (R/Y), using Rotunda NGS Tester 007-00500 or equivalent. • **Does voltage read between 10 and 15 volts?**	Yes ▶ No ▶	GO to **C3**. SERVICE Circuit 640 (R/Y) connection and RETEST.
C3	MEASURE ECT SENSOR CIRCUIT 640 CONTINUITY		
	• Key off. • Check continuity of Circuit 640 (R/Y) and a known good ground, using Rotunda NGS Tester 007-00500 or equivalent. • **Does circuit have continuity?**	Yes ▶ No ▶	GO to **C4**. SERVICE as required and RETEST.
C4	CHECK GAUGE COLD CALIBRATION		
	• Key off. • Disconnect engine coolant temperature sender connector C135 (gasoline) or C150 (diesel). • Connect Rotunda Instrument Gauge System Tester 014-R1063 or equivalent to ECT wiring connector. • Set the tester at 74 ohms and turn key to RUN. Wait 60 seconds. • **Does gauge read within COLD graduation?**	Yes ▶ No ▶	GO to **C5**. GO to **C7**.
C5	CHECK GAUGE HOT CALIBRATION		
	• Key off. • Disconnect engine coolant temperature sender connector C135 (gasoline) or C150 (diesel). • Connect Rotunda Instrument Gauge System Tester 014-R1063 or equivalent to ECT wiring connector. • Set the tester at 9.7 ohms and turn key to RUN. Wait 60 seconds. • **Does gauge read within HOT graduation?**	Yes ▶ No ▶	GO to **C6**. REPLACE ECT sender.
C6	CHECK GROUND CONNECTION		
	• Key off. • Check resistance of ECT sender hex Circuit 39 (R/W) and engine ground, using Rotunda NGS Tester 007-00500 or equivalent. • **Does circuit resistance read less than 0.1 ohm?**	Yes ▶ No ▶	REPLACE water temperature sender. CORRECT ECT sender ground connection and RETEST.

Unlicensed Product

DIAGNOSIS AND TESTING (Continued)

PINPOINT TEST C: TEMPERATURE GAUGE INACCURATE/DOES NOT MOVE (Continued)

Test Step		Result ▶	Action to Take
C7	CHECK FLEX CIRCUIT CONTINUITY		
	• Key off. • Remove instrument cluster and check continuity between the cluster flex circuit and the ECT gauge, using Rotunda NGS Tester 007-00500 or equivalent. • **Does circuit resistance read less than 0.2 ohm?**	Yes ▶ No ▶	GO to **C8**. CORRECT cluster flex circuit as required. RETEST.
C8	CHECK FOR CORROSION/POOR CONNECTIONS		
	• Visually inspect the wiring harness connections for corrosion and poor connections. • **Is there any corrosion and poor connections?**	Yes ▶ No ▶	SERVICE as required. REPLACE ECT sender gauge and RETEST.

PINPOINT TEST D: OIL PRESSURE INDICATOR INACCURATE/DOES NOT MOVE

Test Step		Result ▶	Action to Take
D1	VERIFY POWER AT LOAD SIDE OF FUSE PANEL		
	• Key to RUN. • Measure IP fuse No. 18 (15A) output, using Rotunda NGS Tester 007-00500 or equivalent. • **Does voltage read between 10 and 15 volts?**	Yes ▶ No ▶	GO to **D2**. REPLACE IP fuse No. 18 and RETEST.
D2	VERIFY POWER AT INSTRUMENT PANEL		
	• Key to RUN. • Measure voltage at ECT Sensor input Circuit 640 (R/Y), using Rotunda NGS Tester 007-00500 or equivalent. • **Does voltage read between 10 and 15 volts?**	Yes ▶ No ▶	GO to **D3**. SERVICE Circuit 640 (R/Y) connection and RETEST.
D3	MEASURE ECT SENSOR CIRCUIT 640 CONTINUITY		
	• Key off. • **Does circuit have continuity?**	Yes ▶ No ▶	GO to **D4**. SERVICE as required and RETEST.
D4	CHECK GAUGE FOR LOW GRADUATION		
	• Key off. • Disconnect engine oil pressure switch connector C135. • **Does gauge read within LOW graduation?**	Yes ▶ No ▶	GO to **D5**. GO to **D7**.
D5	CHECK GAUGE FOR MID-SCALE GRADUATION		
	• Key off. • Connect engine oil pressure switch connector C135 to engine block ground. • **Does gauge read within mid-scale graduation or slightly above?**	Yes ▶ No ▶	GO to **D6**. REPLACE oil pressure sender.
D6	CHECK GROUND CONNECTION		
	• Key off. • Check resistance of oil pressure switch hex Circuit 31 (W/R) and engine ground, using Rotunda NGS Tester 007-00500 or equivalent. • **Does circuit resistance read less than 0.1 ohm?**	Yes ▶ No ▶	SERVICE Circuit 31 (W/R) as required. CORRECT oil pressure sender ground connection and RETEST.
D7	CHECK FLEX CIRCUIT CONTINUITY		
	• Key off. • Remove instrument cluster and check continuity between the cluster flex circuit and the oil pressure gauge, using Rotunda NGS Tester 007-00500 or equivalent. • **Does circuit resistance read less than 0.1 ohm?**	Yes ▶ No ▶	GO to **D8**. CORRECT cluster flex circuit as required and RETEST.
D8	CHECK FOR CORROSION/POOR CONNECTIONS		
	• Visually inspect the wiring harness connections for corrosion and poor connections. • **Is there any corrosion or poor connections?**	Yes ▶ No ▶	SERVICE as required. REPLACE oil pressure gauge and RETEST.

Official Licensed Product Ford Motor Company

DIAGNOSIS AND TESTING (Continued)

PINPOINT TEST E: CHARGE INDICATION READS INACCURATELY

Test Step		Result ▶	Action to Take
E1	VERIFY VOLTAGE GAUGE OPERATION		
	• Key to RUN, engine off. • Headlamps on. • Heater blower/fan on HIGH. • **Does gauge pointer move toward the lower portion of the NORMAL BAND (white marked area)?**	Yes ▶ No ▶	GO to **E2**. CHECK fuse and the battery-to-circuit breaker and circuit breaker-to-cluster wire connections. GO to **E6**.
E2	VERIFY POWER AT LOAD SIDE OF FUSE PANEL		
	• Using Rotunda 88 Digital Multimeter 105-00053 or equivalent, verify system voltage at load side of warning indicator fuse. • **Is system voltage present at load side of fuse?**	Yes ▶ No ▶	GO to **E4**. GO to **E3**.
E3	VERIFY POWER AT FEED SIDE OF FUSE PANEL		
	• Using Rotunda 88 Digital Multimeter 105-00053 or equivalent, verify system voltage at feed side of warning indicator fuse. • **Is system voltage present at feed side of fuse?**	Yes ▶ No ▶	REPLACE fuse. SERVICE wiring to fuse panel.
E4	VERIFY POWER AT INSTRUMENT CLUSTER		
	• Partially remove instrument cluster from instrument panel. Using Rotunda 88 Digital Multimeter 105-00053 or equivalent, verify system voltage at instrument cluster connector C250, Pin 1. • **Is voltage present at Pin 1?**	Yes ▶ No ▶	GO to **E5**. SERVICE as required.
E5	VERIFY GROUND CIRCUITRY AT INSTRUMENT CLUSTER		
	CAUTION: Before checking the continuity of any circuit, make sure there is no voltage present in the circuit prior to switching the test equipment to the resistance function to avoid damage to equipment. • Refer to the test equipment user's manual for additional information. • Using Rotunda 88 Digital Multimeter 105-00053 or equivalent, check continuity of instrument cluster and gauge ground circuitry. • **Is ground circuitry good?**	Yes ▶ No ▶	GO to **E6**. SERVICE as required.
E6	CHECK INSTRUMENT CLUSTER PRINTED CIRCUIT CONTINUITY		
	CAUTION: Before checking the continuity of any circuit, make sure that there is no voltage present in the circuit prior to switching the test equipment to the resistance function to avoid damage to equipment. Refer to the test equipment user's manual for additional information. • Check for instrument cluster printed circuit continuity and confirm flex circuit-to-clip and clip-to-gauge contact by physically flexing the wiring and observing continuity. Continuity reading should not fluctuate. • **Are wiring and instrument cluster printed circuit OK?**	Yes ▶ No ▶	REPLACE instrument cluster . SERVICE wiring or REPLACE the instrument cluster .

Unlicensed Product

DIAGNOSIS AND TESTING (Continued)

PINPOINT TEST F: SPEEDOMETER/ODOMETER READS INACCURATELY

Test Step		Result	Action to Take
F1	CHECK SPEEDOMETER/ODOMETER CALIBRATION		
	• Refer to speedometer calibration tolerance specifications table under Specifications in this section. Be sure to check the odometer calibration. If both the odometer and speedometer are incorrect in the same direction, it is usually a sign that the conversion constant, tire size, or speed sensor ring are different than programmed. A speedometer inaccurate with an accurate odometer is usually a problem with the speedometer module itself. • **Are speedometer and odometer calibration within specified limits?**	Yes ▶ No ▶	Speedometer normal. GO to **F2**.
F2	CHECK FOR "NOT PROGRAMMED" MESSAGE		
	• **Does ERROR 3 message alternate with normal odometer display?**	Yes ▶ No ▶	GO to **F5**. RESET conversion constant. GO to **F3**.
F3	CHECK TIRE/AXLE CAPACITY		
	• **Are tires the same size on opposite ends of a common axle and properly inflated?**	Yes ▶ No ▶	DETERMINE conversion constant. GO to **F4**. CORRECT condition or ADVISE customer. GO to **F1**.
F4	VERIFY CONVERSION CONSTANT AND DISPLAY TYPE		
	• Check tire size and type or vehicle rear axle. — Refer to conversion constants chart under Specifications in this section and note conversion constant. • Check whether the conversion constant in the speedometer is correct with the following procedure: — Press and hold the RESET button on the front of the speedometer while turning the key to RUN. — Release the RESET button. The pointer will prove out and some codes will appear on the odometer display. If an E is on the left side of the display, the module is programmed for English display mode and should have English graphics (mph). A lower case "o" signifies an overseas (metric) graphics (km/h). Verify the graphics and display modes agree. (The number appearing after the type is the microprocessor revision level and is not used in this test.) — Press and release the RESET button again. The conversion constant and the word CAL will be shown on the odometer display. — Verify the programmed conversion constant is the same as that displayed on the chart. Refer to Conversion Constants Charts under Specifications in this section. — Key off. 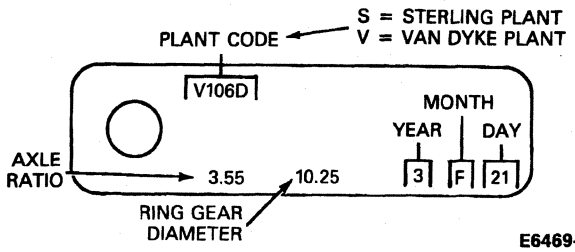 E6469-C • **Is the programmed conversion constant the same as that displayed on the chart and does the programmed display mode match the speedometer graphics?**	Yes ▶ No ▶ ▶	REPLACE instrument cluster as described in this section. VERIFY proper operation. If conversion constant is wrong and programmed display mode OK, RESET conversion constant. REFER to Reset Conversion Constant in **F5**. If conversion constant is OK and programmed display mode wrong, REPLACE instrument cluster as described in this section. VERIFY proper operation.

DIAGNOSIS AND TESTING (Continued)

PINPOINT TEST F: SPEEDOMETER/ODOMETER READS INACCURATELY (Continued)

Test Step		Result ▶	Action to Take
F5	RESET CONVERSION CONSTANT		
	NOTE: The module can only be reprogrammed six (6) times. • Reprogram speed conversion constant using the following procedure: — Locate the dealer mode programming enable connector C232. The connector is located at the bottom of the instrument panel below the center of the glove compartment. On all vehicles, the dealer mode enable wire is Circuit 567 (LB/Y). — Insert metal clip in programming enable connector C232. Clip other end to vehicle ground while the key is in the OFF position. — Key to RUN while holding down the trip odometer RESET button on speedometer. Release RESET button. — Speedometer will prove out (sweep across dial and back). The English/Metric and revision levels will be displayed. The last number of the display is the dealer mode programming lockout count. This count shows the number of allowable conversion constant changes remaining. When the count is zero (0), no additional changes can be made to this instrument cluster. If a conversion constant change is required, a service instrument cluster must be ordered. — Press and release RESET button again and PSOM conversion constant (without the decimal point) followed by the word CAL will be displayed. — Press and release the odometer SELECT button as many times as necessary to change conversion constant to the correct value. NOTE: Pressing and releasing the RESET button to lock in the new conversion constant reduces the number of times the PSOM can be reprogrammed by one count. The module can only be reprogrammed six times. If you change your mind and want to go back to the old conversion constant, turn the key off **before** you lock in the new constant. — When the correct new value is displayed in odometer window, press and release the RESET button to lock in the new conversion constant. — Key off. Remove the ground wire. Verify proper speedometer operation. • **Is conversion constant now set to the desired value?**	Yes ▶ No ▶	Procedure complete. GO to **F4**.

Actual Speedometer or Odometer Value Indicated	48 km/h (30 mph) Actual Speed	97 km/h (60 mph) Actual Speed	Odometer Measure Over Actual 16.1 km Distance (10 miles)
Allowable Range	45-55 km/h (28-34 mph)	93-108 km/h (58-67 mph)	15.4-16.6 km (9.6-10.3 miles)

PINPOINT TEST G: SPEEDOMETER/ODOMETER INOPERATIVE

Test Step		Result ▶	Action to Take
G1	CHECK REAR ANTI-LOCK LAMP ILLUMINATION		
	• Key to RUN. • **Does anti-lock lamp on instrument panel go out after self-test?**	Yes ▶ No ▶	GO to **G2**. REFER to Section 06-09.

DIAGNOSIS AND TESTING (Continued)

PINPOINT TEST G: SPEEDOMETER/ODOMETER INOPERATIVE (Continued)

Test Step		Result	Action to Take
G2	CHECK ODOMETER DISPLAY		
	• **Is odometer display on, and do digits appear normal?**	Yes ▶ No ▶	GO to **G3**. GO to **G6**.
G3	CHECK FOR PRESENCE OF ERROR MESSAGE		
	NOTE: ERROR 3 means conversion constant must be programmed. See Pinpoint Test F. • **Does the word ERROR appear on the odometer display?**	Yes ▶ No ▶	REPLACE instrument cluster. VERIFY proper operation. GO to **G4**.
G4	CHECK ODOMETER OPERATION		
	• **Does the odometer display mileage increase with vehicle in motion or rear wheels turning?**	Yes ▶ No ▶	GO to **G9**. GO to **G5**.
G5	CHECK SPEEDOMETER OPERATION		
	• **Does speedometer indication increase with increasing vehicle speed?**	Yes ▶ No ▶	REPLACE instrument cluster. VERIFY proper operation. GO to **G8**.
G6	CHECK SPEEDOMETER POWER FUSES		
	• Remove and inspect battery power fuse (No. 8) and ignition power fuse (No. 18). Replace as required. NOTE: If fuses are blown, replace with a new, intact fuse. If new fuse blows, determine cause and service as necessary. • **If fuses are OK, do speedometer and odometer now operate properly?**	Yes ▶ No ▶	REPLACE instrument cluster. VERIFY proper operation. GO to **G7**.
G7	CHECK SPEEDOMETER CONNECTOR		
	• Verify ground on instrument cluster connector C250 Pin 3 and Instrument Cluster Connector C251 Pin 1 with key in RUN. • Inspect instrument cluster connectors C250 and C251 and ensure proper fit. Inspect for loose or corroded terminals. Verify locking tabs are in place. • **Is resistance less than 1 ohm?**	Yes ▶ No ▶	REPLACE the instrument cluster. SERVICE wiring harness and fuses as required. VERIFY proper operation.
G8	CHECK SPEED INPUT SIGNAL		
	NOTE: Only wiring harness end of connector is to be probed. Vehicle speed control can be used as a good indicator. If it works normally, then the speedometer module is at least receiving a speed input signal and the wiring and sensor can be assumed to be good. • Connect Rotunda 88 Digital Multimeter 105-00053 or equivalent to Pin 4 (speed in +) and Pin 5 (speed in -). • **Does the voltage increase smoothly and continuously from 0 to approximately 3.5 volts as vehicle speed increases from 0 to 48 km/h (0 to 30 mph)?**	Yes ▶ No ▶	REPLACE the instrument cluster. SERVICE wiring. CHECK for open or shorted wiring. If no problems are found, REFER to Section 06-09.
G9	CHECK SPEEDOMETER		
	• **Does speedometer indication increase with increasing vehicle speed?**	Yes ▶ No ▶	Normal operation. ADVISE customer. REPLACE the instrument cluster.

Official Licensed Product

DIAGNOSIS AND TESTING (Continued)

PINPOINT TEST H: SPEEDOMETER/ODOMETER IMPROPER OPERATION

Test Step		Result ▶	Action to Take
H1	CHECK SPEEDOMETER OPERATION		
	• Is speedometer free from hesitation or sticking when accelerating or decelerating smoothly? This can be confirmed by performing the following test: — Press and hold the RESET button on the front of the speedometer while turning the key to RUN. — Release the RESET button. • **Does the pointer smoothly prove out, or sweep from 0 to maximum speed then back to 0?**	Yes ▶ No ▶	GO to **H2**. After verifying good power and ground connections, GO to **G6**. REPLACE instrument cluster. VERIFY proper operation.
H2	CHECK ODOMETER DISPLAY		
	• The trip odometer must be currently displayed for the RESET button to work. • If unsure about missing or extra segments, perform the odometer display self test as follows: — Press and hold the reset button on the front of the speedometer while turning the key to RUN. — Release the RESET button. — Press and release the select button. The odometer will begin with all zeroes and step through the display test each time the select button is pushed. Refer to PSOM Display Test Sequence below for exact display. • The first digit on the left does not always match the other digits. — Key off to exit this test. **PSOM DISPLAY TEST SEQUENCE** **NUMBER OF TIMES TRIP ODO SELECT BUTTON IS DEPRESSED** MODE / ROM LEVEL / DEALER MODE REPROGRAMMING LOCKOUT COUNT / ENGLISH/MILES OR OVERSEAS/METRIC 0 ..... TRIP 1 ..... TRIP 2 ..... TRIP 3 ..... TRIP 4 ..... TRIP 5 ..... TRIP 6 ..... 7 ..... 8 ..... TRIP 9 ..... TRIP 10 ..... TRIP (REPEATS TO +1) K19255-A • **Are all odometer digits formed correctly (no extra or missing segments)? Do the select and reset buttons work normally?**	Yes ▶ No ▶	GO to **H3**. REPLACE instrument cluster. VERIFY proper operation.
H3	CHECK SPEEDOMETER POINTER		
	• **Does pointer jump or waver at a constant speed?**	Yes ▶ No ▶	GO to **H4**. GO to **H5**.
H4	CHECK RABS SPEED SENSOR RING AND SENSOR		
	• Check for presence of the following conditions. — Damaged, missing or bent teeth — Metal chips on speed sensor — Open or shorted sensor — Improper gap between sensor and speed sensor ring • Refer to Section 06-09 for additional information. • **Are any of the above conditions present?**	Yes ▶ No ▶	SERVICE or REPLACE as necessary. VERIFY proper operation. REPLACE the instrument cluster. VERIFY proper operation.

Official Licensed Product Ford Motor Company

DIAGNOSIS AND TESTING (Continued)

PINPOINT TEST H: SPEEDOMETER/ODOMETER IMPROPER OPERATION (Continued)

	Test Step	Result ▶	Action to Take
H5	CHECK FOR STUCK POINTER		
	• **Is pointer stuck at upper pointer stop?**	Yes ▶	GO to **H6**.
		No ▶	Speedometer normal.
H6	SPEEDOMETER POINTER PROVEOUT		
	• Press and hold the RESET button on the front of the speedometer while turning the key to RUN. • Release the RESET button. The pointer would normally prove out, or sweep from the lower to upper pointer stop and back again. In this case, the pointer will "jump back" to where it should be in the sweep and continue to sweep normally when the pointer gets to within 180 degrees of the upper pointer stop (about 56 km/h [35 mph]). • Key off. • **Does the pointer return to the normal position?**	Yes ▶	Speedometer normal.
		No ▶	REPLACE the instrument cluster. VERIFY proper operation.

PINPOINT TEST J: SPEED CONTROL, PCM OR ELECTRONIC TRANSMISSION DISPLAY INOPERATIVE OR ERRATIC

NOTE: Follow this procedure only after being referred here from Section 10-03, 1996 Powertrain Control/Emissions Diagnosis Manual,[2] or electronic transmission shop manual diagnostics.

	Test Step	Result ▶	Action to Take
J1	CHECK ANTI-LOCK LAMP ILLUMINATION		
	• Key to RUN. • **Does anti-lock lamp on dash go out after self-test?**	Yes ▶	GO to **J2**.
		No ▶	REFER to Section 06-09.
J2	CHECK SPEEDOMETER SPEED OUTPUT SIGNAL		
	CAUTION: Before checking the continuity of any circuit, make sure there is no voltage present in the circuit prior to switching the test equipment to the resistance function to avoid damage to equipment. Refer to the test equipment user's manual for additional information. • To determine if there is a short between the PSOM and the speed control module, the vehicle speed control can be used as a good indicator. If it works normally above 56 km/h (35 mph), this means that the speedometer module is at least receiving a speed input signal and the wiring and sensor can be assumed to be good. NOTE: Only wiring harness end of connector is to be probed. • Use ohmmeter to check for opens in wiring between Pin 7 (speed out) and the affected module. Verify that the terminals in PSOM wiring connector are completely seated in the connector. • **Is the circuit open?**	Yes ▶	SERVICE wiring between speedometer and affected module as required. VERIFY proper operation.
		No ▶	GO to **J3**.

2 Can be purchased as a separate item.

DIAGNOSIS AND TESTING (Continued)

PINPOINT TEST J: SPEED CONTROL, PCM OR ELECTRONIC TRANSMISSION DISPLAY INOPERATIVE OR ERRATIC (Continued)

Test Step		Result ▶	Action to Take
J3	CHECK SPEED INPUT SIGNAL		
	CAUTION: Make sure multimeter is in the voltage function and not in the resistance function to avoid damage to multimeter. NOTE: Only wiring harness end of connector is to be probed. • Connect Rotunda 88 Digital Multimeter 105-00053 or equivalent to Pin 4 (speed +) and Pin 5 (speed -). • If available, a frequency counter can be connected to Pin 4 (speed in +) and Pin 5 (speed in -). • **Does the displayed frequency of the signal increase smoothly and continuously from 0 to approximately 667 Hz at approximately 48 km/h (30 mph)? OR does the voltage increase smoothly and continuously from 0 to approximately 3.5 volts as vehicle speed increases from 0 to approximately 48 km/h (30 mph)?**	Yes ▶ No ▶	REPLACE instrument cluster. SERVICE wiring. CHECK for open wiring. If no problems are found, REFER to Section 06-09.

PINPOINT TEST K: TACHOMETER INOPERATIVE, ERRATIC, WRONG INDICATION, DIESEL ENGINE

Test Step		Result ▶	Action to Take
K1	CHECK FUSE		
	• Check fuse. • **Is fuse blown?**	Yes ▶ No ▶	REPLACE fuse. If fuse blows again, CHECK for short in circuit. GO to **K2**.
K2	CHECK WIRING		
	• Check for loose wiring connections in engine compartment or at instrument cluster. • **Are connections loose?**	Yes ▶ No ▶	SECURE loose connections. GO to **K3**.
K3	CHECK INSTRUMENT CLUSTER PRINTED CIRCUIT		
	• Inspect instrument cluster printed circuit for damage, poor connections or open circuits. • **Is instrument cluster printed circuit open or damaged?**	Yes ▶ No ▶	REPLACE instrument cluster. GO to **K4**.
K4	MAKE RESISTANCE/VOLTAGE CHECKS		
	CAUTION: Before checking the continuity of any circuit, make sure there is no voltage present in the circuit prior to switching the test equipment to the resistance function to avoid damage to equipment. Refer to the test equipment user's manual for additional information. • Remove instrument cluster and make resistance and voltage checks at instrument cluster connector C250 as follows: — Check Pin No. 3 resistance to chassis ground — should read 1 ohm or less. — Check Pin No. 9 resistance to corresponding terminal of diesel sensor mating connector or powertrain control module (PCM) pin — should be 1 ohm or less. — On vehicles equipped with E4OD transmission, check sensor wires to powertrain control module (PCM) module for 1 ohm or less. Perform powertrain control module (PCM) test. **CAUTION: Make sure multimeter is in the voltage function and not in the resistance function to avoid damage to multimeter.** — Connect battery. Key to RUN. Check for +12 volts at Pin No. 13 (of Connector A). Key off. Disconnect battery. • **Are resistances/voltages within specifications?**	Yes ▶ No ▶	Condition is not in tachometer. SERVICE wiring. RETURN to **K1** and RETEST.

Official Licensed Product Ford Motor Company

DIAGNOSIS AND TESTING (Continued)

PINPOINT TEST L: TACHOMETER INOPERATIVE, ERRATIC, WRONG INDICATION, GASOLINE ENGINE

Test Step		Result ▶	Action to Take
L1	CHECK FUSE		
	• Check fuse. • **Is fuse blown?**	Yes ▶	REPLACE fuse. If fuse blows again, CHECK for short in circuit.
		No ▶	GO to **L2**.
L2	CHECK WIRING		
	• Check for loose wiring connections in engine compartment or at instrument cluster. • **Are connections loose?**	Yes ▶	SECURE loose connections.
		No ▶	GO to **L3**.
L3	CHECK INSTRUMENT CLUSTER PRINTED CIRCUIT		
	• Inspect instrument cluster printed circuit for damage, poor connections, or open circuits. • **Is instrument cluster printed circuit open or damaged?**	Yes ▶	REPLACE instrument cluster .
		No ▶	GO to **L4**.
L4	MAKE RESISTANCE / VOLTAGE CHECKS		
	CAUTION: Before checking the continuity of any circuit, make sure there is no voltage present in the circuit prior to switching the test equipment to the resistance function to avoid damage to equipment. Refer to the equipment user's manual for additional information. • Remove instrument cluster and make resistance and voltage checks (using Rotunda 88 Digital Multimeter 105-00053 or equivalent) at instrument cluster connector C250 as follows: — Check Pin No. 3 resistance to chassis ground — should read 1 ohm or less. — Check Pin No. 10 resistance to chassis ground — should read 1 ohm or less, if vehicle has 8-cylinder engine. Open circuit if 6-cylinder engine. — Check Pin No. 9 resistance to negative terminal of ignition coil should be 1 ohm or less. **CAUTION: Make sure multimeter is in the voltage function and not in the resistance function to avoid damage to multimeter.** — Connect battery. Key to RUN. Check for +12 volts at Pin No. 13. Turn ignition off. Disconnect battery. • **Are resistances / voltages within specifications?**	Yes ▶	Condition is not in tachometer. SERVICE wiring.
		No ▶	REPLACE tachometer .

PINPOINT TEST M: ALL WARNING INDICATORS INOPERATIVE

Test Step		Result ▶	Action to Take
M1	TEST FUSE		
	• Key off. • Remove fuse and test for continuity using Rotunda 88 Digital Multimeter 105-00053 or equivalent. • **Does fuse test OK?**	Yes ▶	REINSTALL fuse. GO to **M2**.
		No ▶	REPLACE fuse. VERIFY indicators operation.
M2	TEST FUSE PANEL VOLTAGE IN		
	• Key off. • Place Rotunda 88 Digital Multimeter 105-00053 or equivalent in volts position. • Connect meter to fuse panel feed Circuit 16 (R / LG) and perform voltage test. • **Does circuit indicate a short or open?**	Yes ▶	SERVICE or REPLACE circuit as necessary. VERIFY system operation.
		No ▶	GO to **M3**.
M3	TEST INSTRUMENT CLUSTER FEED CIRCUIT		
	• Key off. • Connect Rotunda 88 Digital Multimeter 105-00053 or equivalent to instrument cluster feed circuit at fuse panel output and instrument cluster input. • Key to RUN and test feed circuit for voltage. • **Does feed circuit test OK?**	Yes ▶	REPLACE instrument cluster.
		No ▶	SERVICE or REPLACE feed circuit wiring or connectors as necessary.

Special Licensed Product Ford Motor Company

DIAGNOSIS AND TESTING (Continued)

PINPOINT TEST N: BRAKE WARNING NEVER/ALWAYS ON

	Test Step	Result ▶	Action to Take
N1	CHECK BRAKE WARNING INDICATOR		
	• Key to RUN. • Observe brake warning indicator for proveout. • **Does brake warning indicator function properly?**	Yes ▶ No ▶	System OK. If system light illuminates and stays on, GO to **N2**. If system light does not illuminate, GO to **N6**.
N2	CHECK PARK BRAKE		
	• Release park brake. • Check to be sure parking brake switch releases. • Key to RUN. • **Does brake warning indicator function correctly?**	Yes ▶ No ▶	System OK. GO to **N3**.
N3	CHECK BRAKE FLUID LEVEL		
	• Move vehicle to a level surface. • Key off. • Open hood and brake master cylinder reservoir. • Check brake fluid level. • **Is brake fluid level low?**	Yes ▶ No ▶	REFILL brake master cylinder reservoir with Ford High Performance DOT 3 Brake Fluid C6AZ-19542-AA or equivalent DOT 3 fluid meeting Ford specification ESA-M6C25-A. CHECK indicator operation. GO to **N4**.
N4	TEST PARK BRAKE SWITCH		
	• Key off. • Connect Rotunda 88 Digital Multimeter 105-00053 or equivalent to park brake switch. • Key to RUN and release park brake. • Check for voltage through park brake switch. • **Is there voltage through park brake switch?**	Yes ▶ No ▶	REPLACE park brake switch. CHECK for binding of park brake cable. SERVICE or REPLACE as necessary. GO to **N5**.
N5	CHECK FOR WIRE TO WIRE SHORTS		
	• Key off. • Inspect wiring for frayed or exposed wiring. • Check instrument cluster connector C251, park brake switch connector C276 and brake warning indicator connector C202 for damage. • **Is any wiring or connector damage indicated?**	Yes ▶ No ▶	SERVICE or REPLACE damaged component as necessary. REFER to Electrical and Vacuum Troubleshooting Manual for additional information on system wiring diagrams.
N6	TEST FUSE		
	• Key off. • Remove fuse and test for continuity using Rotunda 88 Digital Multimeter 105-00053 or equivalent. • **Does fuse test as having continuity?**	Yes ▶ No ▶	REINSTALL fuse. GO to **N7**. REPLACE fuse. CHECK system for proper operation.
N7	CHECK INDICATOR LAMP		
	• Key off. • Remove brake warning indicator lamp. • Test brake warning indicator lamp for continuity using Rotunda 88 Digital Multimeter 105-00053 or equivalent. • **Does indicator lamp show continuity?**	Yes ▶ No ▶	REINSTALL indicator lamp. GO to **N8**. REPLACE indicator lamp. CHECK system operation.
N8	TEST FOR FUSE PANEL FEED VOLTAGE		
	• Key off. • Place volt-ohmmeter in the volts position. • Connect meter to fuse panel voltage input side and a known good ground. • Turn key to RUN position. • **Does fuse panel show feed or input voltage?**	Yes ▶ No ▶	GO to **N9**. LOCATE and SERVICE short or open in circuit.
N9	TEST BRAKE WARNING FEED CIRCUITS FOR SHORTS OR OPENS		
	• Connect Rotunda 88 Digital Multimeter 105-00053 or equivalent to each feed circuit individually and test for short or open circuits. Refer to Electrical and Vacuum Troubleshooting Manual for wiring schematics. • **Are any shorts or opens located?**	Yes ▶ No ▶	SERVICE or REPLACE damaged circuit as necessary. GO to **N10**.

Ford Motor Company Licensed Product

DIAGNOSIS AND TESTING (Continued)

PINPOINT TEST N: BRAKE WARNING NEVER/ALWAYS ON (Continued)

Test Step		Result ▶	Action to Take
N10	TEST RETURN CIRCUIT		
	• Key off. • Place Rotunda 88 Digital Multimeter 105-00053 or equivalent in the ohms position. • Test return Circuit 57 (BK) for continuity. • **Does return circuit test as having continuity?**	Yes ▶ No ▶	GO to **N11**. SERVICE or REPLACE as necessary.
N11	TEST INSTRUMENT CLUSTER PRINTED CIRCUIT		
	• Key off. • Test continuity of the instrument cluster printed circuit using Rotunda 88 Digital Multimeter 105-00053 or equivalent. • **Does instrument cluster printed circuit test OK?**	Yes ▶ No ▶	REFER to Section 06-00 for additional brake system service and the Electrical and Vacuum Troubleshooting Manual for additional wiring information. REPLACE instrument cluster.

PINPOINT TEST P: CHARGE SYSTEM WARNING NEVER/ALWAYS ON

Test Step		Result ▶	Action to Take
P1	TEST INDICATOR LAMP		
	• Key off. • Remove indicator lamp and test for continuity using Rotunda 88 Digital Multimeter 105-00053 or equivalent. • **Does indicator lamp test OK?**	Yes ▶ No ▶	REINSTALL lamp. GO to **P2**. REPLACE lamp. VERIFY proper operation.
P2	TEST FEED CIRCUITS		
	• Perform voltage test on Circuits 16 (R/LG), 904 (LG/R) and 38 (BK/O) using Rotunda 88 Digital Multimeter 105-00053 or equivalent. Refer to Electrical and Vacuum Troubleshooting Manual. • **Are shorts or opens indicated?**	Yes ▶ No ▶	SERVICE or REPLACE circuits or connectors as necessary. REFER to Electrical and Vacuum Troubleshooting Manual or Section 14-00 in this manual for additional information on charging system.

Official Licensed Product

PINPOINT TEST Q: HIGH BEAM WARNING NEVER/ALWAYS ON

Test Step		Result ▶	Action to Take
Q1	TEST INDICATOR LAMP		
	• Remove indicator lamp from instrument cluster. • Test continuity of indicator lamp using Rotunda 88 Digital Multimeter 105-00053 or equivalent. • **Does indicator lamp have continuity?**	Yes ▶ No ▶	REINSTALL indicator lamp. GO to **Q2**. REPLACE indicator lamp. CHECK indicator for proper operation.
Q2	CHECK FEED CIRCUITS		
	• Connect Rotunda 88 Digital Multimeter 105-00053 or equivalent to feed Circuits 38 (BK/O), 15 (R/Y), 12 (LG/BK) and 932 (GY/W) and test each for shorts or opens. • **Are short or open circuits found?**	Yes ▶ No ▶	SERVICE or REPLACE circuit(s) wiring as necessary. GO to **Q3**.
Q3	CHECK RETURN CIRCUIT		
	• Key off. • Check return Circuit 57 (BK) for continuity using Rotunda 88 Digital Multimeter 105-00053 or equivalent. • **Does return circuit test as having continuity?**	Yes ▶ No ▶	GO to **Q4**. SERVICE or REPLACE return circuit as necessary. TEST system for correct operation.
Q4	TEST INSTRUMENT CLUSTER PRINTED CIRCUIT		
	• Place Rotunda 88 Digital Multimeter 105-00053 in ohms position. • Key off. • Test printed circuit for continuity. • **Does printed circuit have continuity?**	Yes ▶ No ▶	REFER to Electrical and Vacuum Troubleshooting Manual for testing procedures of multi-function switch. REPLACE instrument cluster.

DIAGNOSIS AND TESTING (Continued)

PINPOINT TEST R: SAFETY BELT WARNING NEVER/ALWAYS ON

	Test Step	Result ▶	Action to Take
R1	TEST INDICATOR LAMP		
	• Remove indicator lamp from instrument cluster. • Test lamp for continuity using Rotunda 88 Digital Multimeter 105-00053 or equivalent. • **Does indicator lamp test as having continuity?**	Yes ▶ No ▶	REINSTALL indicator lamp. GO to **R2**. REPLACE indicator lamp. CHECK system for proper operation.
R2	TEST FUSE		
	• Remove fuse from panel. • Test fuse for continuity using Rotunda 88 Digital Multimeter 105-00053 or equivalent. • **Does fuse test as having continuity?**	Yes ▶ No ▶	REINSTALL fuse. GO to **R3**. REPLACE fuse. CHECK system for proper operation.
R3	TEST SAFETY BELT SWITCH FOR SHORT		
	• Place Rotunda 88 Digital Multimeter 105-00053 or equivalent in volts position. • Connect meter to Circuits 85 (BR/LB) and 57 (BK) at switch. • Fasten safety belt buckles. • Key to RUN. • Check for voltage through safety belt switch. • **Does meter show voltage through switch?**	Yes ▶ No ▶	REPLACE safety belt switch. REFER to Electrical and Vacuum Troubleshooting Manual. GO to **R4**.
R4	TEST SAFETY BELT SWITCH FOR OPEN		
	• Place Rotunda 88 Digital Multimeter 105-00053 or equivalent in volts position. • Connect meter to Circuits 85 (BR/LB) and 57 (BK) at switch. • Unfasten safety belt buckles. • Key to RUN. • Check for voltage through safety belt switch. • **Does meter show voltage through switch?**	Yes ▶ No ▶	GO to **R5**. REPLACE safety belt switch. REFER to Electrical and Vacuum Troubleshooting Manual.
R5	CHECK FOR VOLTAGE AT SAFETY BELT WARNING INDICATOR		
	• Place Rotunda 88 Digital Multimeter 105-00053 or equivalent in volts position. • Connect volt-ohmmeter to feed Circuit 450 (DG/LG) and return Circuit 57 (BK) at safety belt warning indicator. • Key to RUN. • **Is at least 12 volts present?**	Yes ▶ No ▶	REFER to Section 13-09 for additional diagnostic information. GO to **R6**.
R6	TEST FEED CIRCUIT		
	• Place volt-ohmmeter in volts position. • Perform voltage test on feed Circuit 640 (R/Y). • **Does feed circuit indicate a short or open?**	Yes ▶ No ▶	SERVICE or REPLACE feed circuit wire as necessary. GO to **R7**.
R7	TEST WARNING CHIME MODULE		
	• Perform voltage test on warning chime module at Circuits 640 (RY) and 57 (BK). Refer to Electrical and Vacuum Troubleshooting Manual. • **Does warning chime module test OK?**	Yes ▶ No ▶	GO to **R8**. REPLACE warning chime module. CHECK system for proper operation.
R8	TEST FEED CIRCUIT TO INDICATOR		
	• Place volt-ohmmeter in volts position. • Perform voltage test on Circuit 450 (DG/LG). • **Does circuit indicate a short or open?**	Yes ▶ No ▶	SERVICE or REPLACE feed circuit wire as necessary. GO to **R9**.
R9	TEST RETURN CIRCUIT		
	• Key off. • Place volt-ohmmeter in ohms position. • Test Circuit 57 (BK) for continuity. • **Does meter indicate continuity through return circuit?**	Yes ▶ No ▶	REFER to Section 13-09 for additional diagnostic information. SERVICE or REPLACE return circuit wire as necessary.

Official Licensed Product Company

DIAGNOSIS AND TESTING (Continued)

Component Tests

CAUTION: During in-vehicle tests, do not let tester terminal studs designated by arrows come in contact with vehicle ground. The gauge will be shorted to the ground, preventing an accurate test and possibly damaging the gauge.

1. Disconnect connector from the appropriate sender and hook onto the matching terminals on the tester.
2. Turn the vehicle ignition switch lock cylinder (11582) to ON position.

Fuel Gauge, F-250, F-350

If only the fuel gauge is inoperative or appears to be out of calibration, a calibration test can be conducted on the vehicle fuel gauge system.

Fuel Tank Sending Unit

With the sending unit float arm in the empty stop position, resistance should be 15 ohms (below E). With the sending unit float arm in the full stop position, resistance should be 160 ohms (above F). The fuel gauge should read empty at 22.5 ohms and full at 145 ohms.

Fuel Tank Second Sending Unit Test, Dual Tanks

On aft / axle (standard) fuel tank, the fuel sender electrical connector can be disconnected and attached to a second test sender outside the fuel tank. The float can then be manually operated (up and down) while the fuel gauge operation is observed. Proper gauge function indicates a problem with the fuel tank sending unit located in the fuel tank. Improper operation indicates a problem with the fuel tank gauge or wiring. Refer to Pinpoint Test A in this section.

Fuel Tank Damage

If fuel indicating system components are functioning properly and inaccurate indications continue, check the fuel tank for distorted fuel tank sending unit mounting angle or damaged fuel tank sending unit. Make sure the fuel delivery module (FDM) is the correct model for the vehicle and that the FDM is not contacting the bottom of the fuel tank. Also inspect the vent hoses for kinks or obstructions.

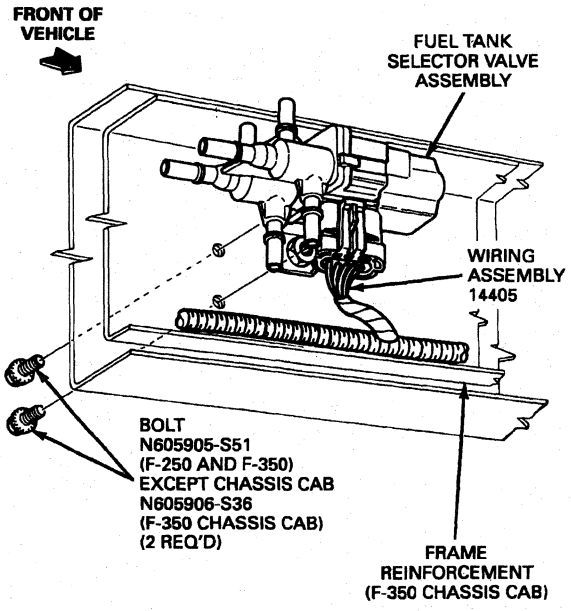

6-PORT FUEL TANK SELECTOR VALVE — F-SERIES (7.3L DIESEL)

K9206-E

Official Licensed Product

Coolant Temperature Gauge

Check gauge calibration as follows:

- Using a Rotunda Instrument Gauge System Tester 014-R1063 or equivalent, with the key in the OFF position, disconnect wiring connector at the sender and connect tester to wiring connector.
- Set the tester to 74 ohms.
- Turn the key to RUN, and wait 60 seconds. The gauge should indicate on the COLD graduation.
- Set the tester to 9.7 ohms and wait 60 seconds. The gauge should indicate on the HOT graduation.

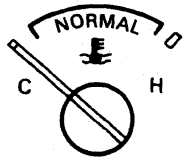

K17256-A

- If engine coolant temperature gauge tests within calibration, replace engine coolant temperature sender.
- If engine coolant temperature gauge still tests out of calibration, replace coolant temperature gauge.

DIAGNOSIS AND TESTING (Continued)

Oil Pressure Sender

Check gauge operation as follows:

- With the key in RUN and the engine off, disconnect wiring connector at the switch. The gauge should indicate on the LOW graduation or below.
- Connect the wiring connector to the engine block ground. The gauge should indicate just slightly above mid-scale.
- If the oil pressure gauge tests within calibration, replace oil pressure switch.
- If the gauge still tests out of calibration, replace oil pressure gauge.

Battery Voltage Gauge

Test the battery voltage gauge as follows:

- Turn the key to RUN, turn the headlamps on, and set the heater blower / fan on high with the engine (6007) stopped. The gauge pointer should move toward the lower portion of the normal band (the white marked area).
- If no movement of needle is observed, check the fuse and the battery-to-circuit breaker and circuit breaker-to-cluster wire connections.
- If connections are tight and wire continuity is good, remove the instrument cluster from the vehicle.
- Check for flex circuit continuity and confirm flex circuit-to-clip and clip-to-gauge contact.
- If all connections are good, replace the instrument cluster .

Charge Indicator Lamp System

Normal Charge Indicator

With key off, charge indicator (battery symbol) lamp is off.

With key in RUN (engine not running), charge indicator (battery symbol) lamp is on.

With key in RUN (engine running), charge indicator (battery symbol) lamp is off.

1. If the charge indicator lamp does not light with the key in the RUN position (engine not running), check the I wiring circuit (ignition switch to regulator I terminal), for an open circuit or burned-out charge indicator lamp.
2. If the charge indicator lamp does not light, disconnect the wiring plug connector at the regulator and connect a jumper wire from the I terminal of the regulator wiring plug to the negative battery post cable clamp.
3. The charge indicator lamp should light when the key is turned to RUN (engine not running).
4. If the charge indicator bulb does not light, check the bulb for continuity and replace if necessary.
5. If the bulb is not burned out, an open circuit exists between the ignition switch (11572) and the voltage regulator.
6. Check the 500-ohm resistor across the charge indicator lamp.

For additional diagnosis and testing procedures, refer to Section 14-00.

REMOVAL AND INSTALLATION

Instrument Cluster

Federal law requires that the odometer in any replacement speedometer must register the same mileage as that registered on the removed speedometer / odometer. Service replacement speedometer / odometer and odometer modules with the mileage preset to actual vehicle mileage are available through Ford Electronic Service Centers. In nearly all instances, the mileage continues to accumulate in the odometer memory even if the odometer does not display mileage. This mileage can usually be verified by the electronic service centers. Contact the service center to receive a replacement speedometer / odometer or odometer module with the mileage preset to actual mileage.

If the actual vehicle mileage cannot be verified, the service center will supply a speedometer / odometer module with the odometer display preset to zero (0) miles and the service odometer segment(s) illuminated in the vicinity of the odometer display. In addition, an odometer mileage sticker is supplied with the replacement odometer. This sticker must display the estimated vehicle mileage and is to be affixed to the driver door.

NOTE: The instrument cluster (10849) must be serviced as a complete assembly if it is determined that any of the following components are malfunctioning:

— speedometer / odometer assembly
— instrument cluster printed circuit
— instrument cluster gauge clips
— instrument cluster backplate

Instructions for ordering and handling a replacement instrument cluster are provided in this section.

Instrument cluster components that are serviceable at the dealership level are:

- instrument panel lamp socket and bulbs (13B765) — base P / N 13B765
- fuel and battery voltage gauge
- oil pressure and engine coolant temperature gauge
- tachometer (17360) (if applicable) — base P / N 17360
- instrument cluster main lens (10887) — base P / N 10B885
- instrument cluster mask (10890) — base P / N 10894
- lens retaining screws — base P / N 804988

REMOVAL AND INSTALLATION (Continued)

In addition to the above components, the following components are serviceable on Motorhome vehicles only:

- unleaded fuel label (9A095) — base P/N 9A095
- instrument cluster bezel (10876) — base P/N 10876
- right- and left-hand jewels — base P/N 807025
- screws — base P/N 807025

If diagnostic procedures result in a determination that any other instrument cluster component is malfunctioning, call the applicable 800 number listed below to order a replacement instrument cluster. Please have the information below ready before you call.

1. Vehicle type and cluster type (standard — mechanical, optional — electronic).
2. PSOM conversion constant. Refer to conversion constants chart under Specifications in this section.
3. Current actual vehicle mileage.
4. Form No. 1878 (filled out).
5. Form No. 1863 (filled out).

For dealers serviced by the Detroit, New York and Atlanta Parts Distribution Centers, call 1-800-262-9606.

For all other dealers, the number to call is 1-800-361-3531.

The service instrument cluster received will be preprogrammed with the vehicle mileage (eliminating the need for "circled S" odometers) and the PSOM speed signal conversion constant.

CAUTION: The instrument cluster requires special handling to avoid damaging internal components. The cluster MUST be kept FACE UP or in the in-vehicle position. Leaving the cluster face down may result in a loss of dampening fluid used in the gauges. The lost fluid could stain the cluster face or result in excessive pointer waver.

Removal

1. Disconnect the battery ground cable (14301).
2. Remove the instrument cluster opening finish panels. Refer to Section 01-12.
3. Remove the transmission indicator cable loop from the ball stud on the shift lever (automatic transmission-equipped vehicles only).
4. Remove the thumbwheel bracket screw and detach bracket from steering column tube (3514) (automatic transmission-equipped vehicles only).

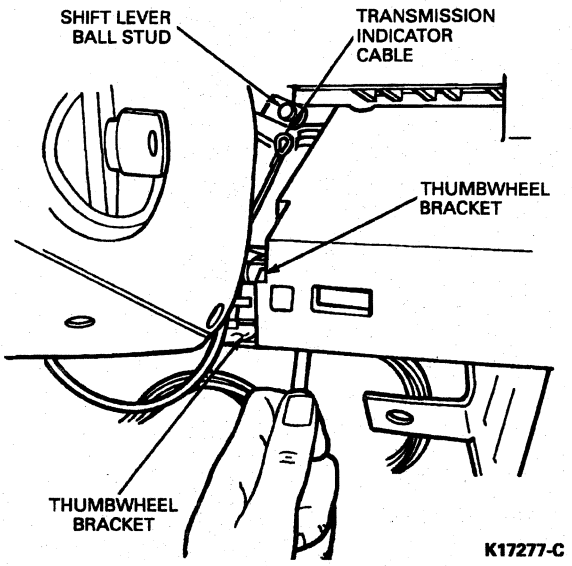

5. Remove four screws attaching the instrument cluster to the instrument panel (04320). Pull instrument cluster out of instrument panel, bottom first, to rest on the steering column tube.
6. Disconnect the three electrical connectors and remove the instrument cluster.

Installation

1. Position the instrument cluster facing up on the steering column and connect the three electrical connectors.
2. Position the instrument cluster in the instrument panel to engage locator pins.
3. Install the four screws attaching the instrument cluster to the instrument panel.
4. Place the transmission selector cable loop on the shift lever ball stud (automatic transmission-equipped vehicles only).
5. Position thumbwheel bracket on the right side of the steering column tube and secure screw (automatic transmission-equipped vehicles only).
6. Adjust the automatic transmission selector lever indicator (if so equipped). Refer to Section 11-04.
7. Install the cluster opening finish panels. Refer to Section 01-12.
8. NOTE: When the battery (10655) has been disconnected and reconnected, some abnormal drive symptoms may occur while the powertrain control module (PCM)(12A650) relearns its adaptive strategy. The vehicle may need to be driven 16 km (10 miles) or more to relearn the strategy.

   Connect the battery ground cable.

Ford Motor Company

REMOVAL AND INSTALLATION (Continued)

Instrument Cluster Installation

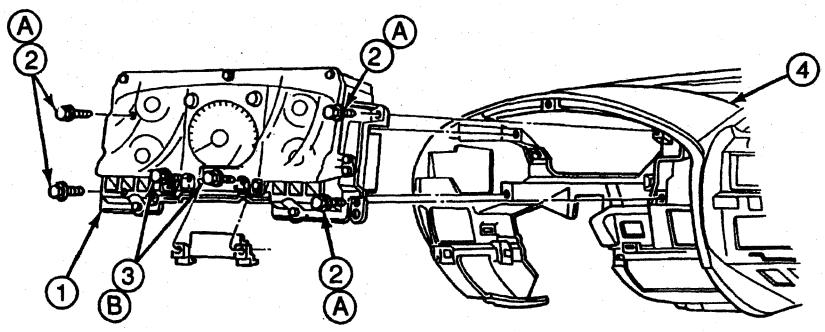

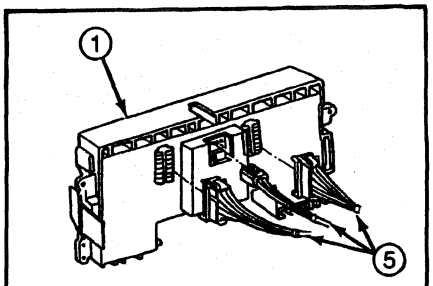

REAR VIEW OF INSTRUMENT CLUSTER AND WIRING

K17279-E

Item	Part Number	Description
1	10849	Instrument Cluster
2	N803876-S36B	Screw (4 Req'd)
3	N800705-S36B	Screw (2 Req'd)
4	04320	Instrument Panel

(Continued)

Item	Part Number	Description
5	14401	Main Wiring
A	—	Tighten to 1.9-2.5 N·m (17-22 Lb-In)
B	—	Tighten to 1.4 N·m (12 Lb-In)

Official Licensed Product
Ford Motor Company

Fuel Gauge

Removal

1. Remove instrument cluster (10849) from instrument panel (04320).
2. Remove screws attaching the instrument cluster main lens (10887) and instrument cluster mask (10890) to instrument cluster backplate.

Installation

1. Follow removal procedure in reverse order.
2. When installing the instrument cluster fuel gauge, make sure pins are properly seated into the instrument cluster backplate retaining clips.
3. Check system operation.

Instrument Cluster Temperature Gauge

Removal

1. Remove instrument cluster (10849) from instrument panel (04320).
2. Remove screws attaching the instrument cluster main lens (10887) and instrument cluster mask (10890) to instrument cluster backplate.
3. Remove instrument cluster main lens and instrument cluster mask.
4. NOTE: The instrument cluster temperature gauge is attached to the instrument cluster backplate by retaining clips.

   Remove the instrument cluster temperature gauge from instrument cluster backplate by grasping the outside edges of gauge and lifting.

Installation

1. Follow removal procedure in reverse order.
2. When installing the instrument cluster temperature gauge, make sure pins are properly seated into the instrument cluster backplate retaining clips.
3. Check system operation.

Oil Pressure Gauge

Removal

1. Remove instrument cluster (10849) from instrument panel (04320).
2. Remove screws attaching the instrument cluster main lens (10887) and instrument cluster mask (10890) to instrument cluster backplate.
3. Remove instrument cluster main lens and instrument cluster mask.
4. NOTE: The oil pressure gauge is attached to the instrument cluster backplate by retaining clips.

   Remove the oil pressure gauge from instrument cluster backplate by grasping the outside edges of gauge and lifting.

REMOVAL AND INSTALLATION (Continued)

Installation

1. Follow removal procedure in reverse order.
2. When installing the oil pressure gauge, make sure pins are properly seated into the instrument cluster backplate retaining clips.
3. Check system operation.

Battery Voltage Gauge

Removal

1. Remove instrument cluster (10849) from instrument panel (04320).
2. Remove screws attaching the instrument cluster main lens (10887) and instrument cluster mask (10890) to instrument cluster backplate.
3. Remove instrument cluster main lens and instrument cluster mask.
4. NOTE: The battery voltage gauge is attached to the instrument cluster backplate by retaining clips.

   Remove the battery voltage gauge from instrument cluster backplate by grasping the outside edges of gauge and lifting.

Installation

1. Follow removal procedure in reverse order.
2. When installing the battery voltage gauge, make sure pins are properly seated into the instrument cluster backplate retaining clips.
3. Check system operation.

Tachometer

Removal

1. Remove instrument cluster (10849) from instrument panel (04320).
2. Remove screws attaching the instrument cluster main lens (10887) and instrument cluster mask (10890) to instrument cluster backplate.
3. Remove instrument cluster main lens and instrument cluster mask.
4. NOTE: The tachometer (17360) is attached to the instrument cluster backplate by retaining clips.

   Remove the tachometer from instrument cluster backplate by grasping the outside edges of the gauge and lifting.

Installation

1. Follow removal procedure in reverse order.
2. When installing the tachometer, make sure pins are properly seated into the instrument cluster backplate retaining clips.
3. Check system operation.

Automatic Transmission Selector Indicator

Removal

1. Remove the instrument cluster (10849) from the instrument panel (04320).
2. Remove two screws attaching the automatic transmission selector indicator to the instrument cluster.
3. Remove the automatic transmission range indicator by sliding it out downward from the bottom of the instrument cluster.

Installation

1. Follow removal procedure in reverse order. Refer to Section 11-04 for automatic transmission selector indicator adjustment.

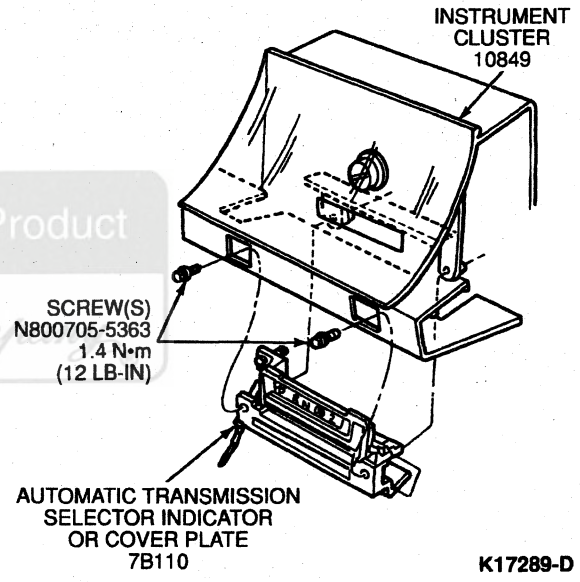

K17289-D

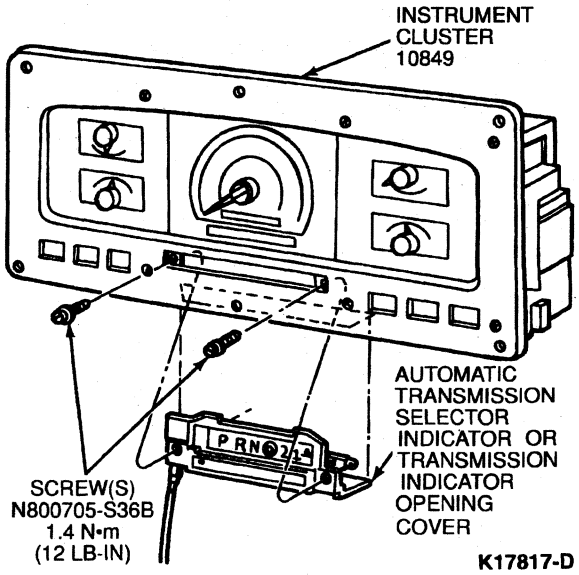

K17817-D

REMOVAL AND INSTALLATION (Continued)

Indicator / Warning Bulbs

NOTE: The removal and installation procedures are identical for all indicator / warning lamps.

Removal

1. Disconnect the battery ground cable (14301).
2. Remove instrument cluster opening finish panels. Refer to Section 01-12.
3. Remove screws attaching instrument cluster (10849) to instrument panel (04320)
4. Pull instrument cluster rearward to provide access to the back of instrument cluster.
5. Turn the desired indicator / warning lamp counterclockwise.
6. Remove bulb from its socket.

Installation

1. Follow removal procedure in reverse order.
2. When installing the instrument cluster bulb, make sure pins are properly seated into the instrument cluster backplate.
3. Check system operation.

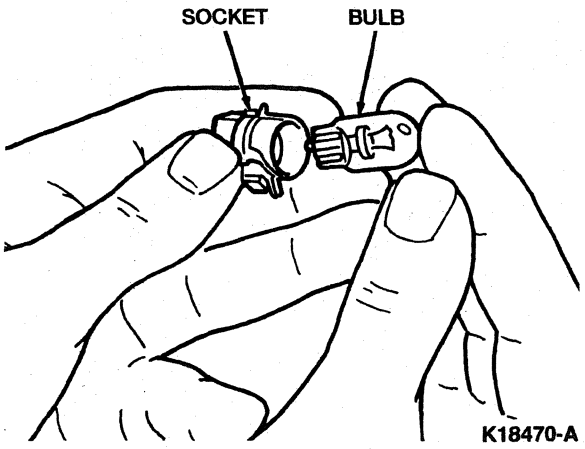

Rear View of Instrument Cluster, Base

Official Licensed Product

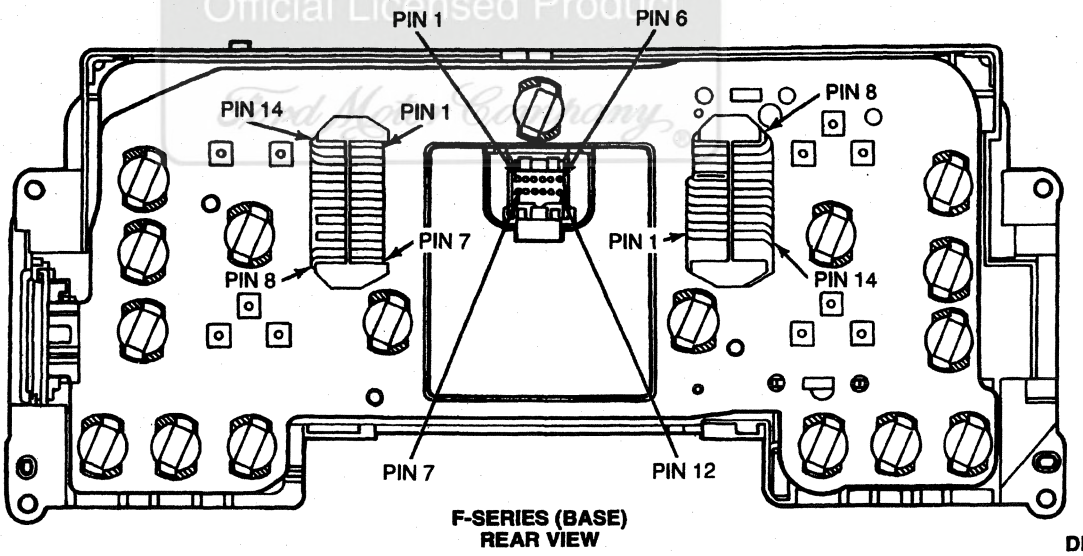

REMOVAL AND INSTALLATION (Continued)

Rear View of Instrument Cluster, Optional

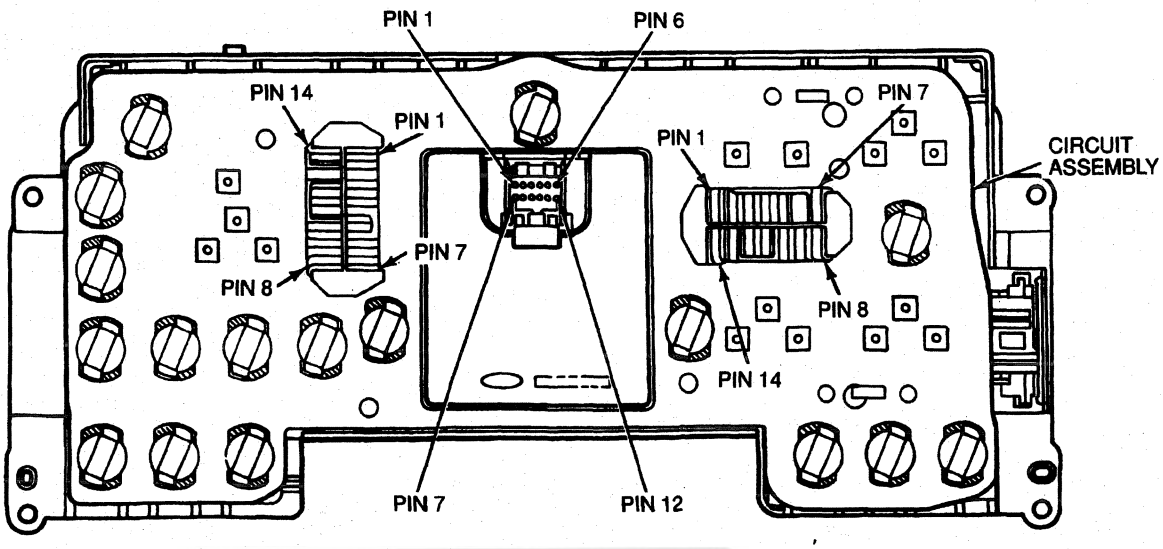

K17848-C

Official Licensed Product
Ford Motor Company

DISASSEMBLY AND ASSEMBLY

Instrument Cluster

Refer to Instrument Cluster in the Removal and Installation portion of this section.

CLEANING AND INSPECTION

Instrument Cluster Lenses

CAUTION: The use of vinyl cleaners and other similar cleaning agents to clean the vehicle interior or instrument cluster main lens (10887) has resulted in damage to the instrument cluster main lenses. The chemical content of these cleaning agents (O-dichlorobenzene, ethyl alcohol or cellosolve) has produced fogging, spotting, staining or splotches on the lenses, either through overspray or direct use on the instrument cluster main lenses. Therefore, use extreme caution during interior cleanup to prevent overspray of cleaning agents which contain the chemical agents mentioned from contacting the instrument cluster main lenses.

Clean the instrument cluster main lenses with Ultra-Clear Spray Glass Cleaner E4AZ-19C507-AA or equivalent commercial cleaning product meeting Ford specification ESR-M145P5-A, using a clean soft, lint-free cloth. The Ford Glass Cleaner has been especially formulated for cleaning windows in vehicles and is approved for use in cleaning the plastic instrument cluster main lenses. Read and carefully follow directions shown on the container for best results.

SPECIFICATIONS

SPEEDOMETER CALIBRATION TOLERANCE SPECIFICATIONS

Actual Speedometer or Odometer Value Indicated	48 km/h (30 mph) Actual Speed	97 km/h (60 mph) Actual Speed	Odometer Measure Over Actual 16.1 km Distance (10 Miles)
Allowable Range	45-55 km/h (28-34 mph)	93-108 km/h (58-67 mph)	15.4-16.6 km (9.6-10.3 miles)

Conversion Constants Chart

TIRE DESCRIPTION SIZE/TYPE/SAE REVS/MILE	AXLE INFORMATION: AXLE CAPACITY / TAPE GROUP / SPEED SENSOR RING TEETH: 3800/800/108	5300/100-119/120	6250/120-139/120	7400/160-179/120	8250/180-199/120	11000/940-949/120	
P215/75R15SL/A/S/753	10.17	N/A	N/A	N/A	N/A	N/A	
P235/75R15XL/A/S/720	9.72	N/A	N/A	N/A	N/A	N/A	
P235/75R15XL/A/T/716	9.67	N/A	N/A	N/A	N/A	N/A	
31-10.50R15C/A/T/680	9.18	N/A	N/A	N/A	N/A	N/A	
LT215/85R16D/A/T/684	N/A	10.26	N/A	10.26	10.26	N/A	
LT215/85R16D/A/S/687	N/A	10.31	N/A	N/A	N/A	N/A	
LT235/85R16E/A/T/653	N/A	9.80	9.80	N/A	9.80	9.80	
LT235/85R16E/A/S/656	N/A	9.84	9.84	N/A	9.84	9.84	
7.50R-16D/HWY/653	N/A	9.80	N/A	N/A	N/A	N/A	
7.50R-16D/A/T/649	N/A	9.74	N/A	N/A	N/A	N/A	
P265/75R15/A/T/680	9.18	N/A	N/A	N/A	N/A	N/A	
P275/60HR17/A/S/6-90.5	9.32	N/A	N/A	N/A	N/A	N/A	

Official Licensed Product

NOTE: SOME MANUFACTURERS MAY REFER TO A/S TIRES AS "HWY" AND A/T TIRES AS "MUD & SNOW".

F-SUPER DUTY MOTORHOME CHASSIS CONVERSION CONSTANT = 1.0

K19256-C

LUBRICANT/ADHESIVE/CLEANER SPECIFICATIONS

Description	Part Number	Ford Specification
Ultra-Clear Spray Glass Cleaner	E4AZ-19C507-AA	ESR-M145P5-A
Ford High Performance DOT 3 Brake Fluid	C6AZ-19542-AA	ESA-M6C25-A DOT 3

SPECIFICATIONS (Continued)

SENDING UNIT LOCATION GUIDE

Engine	Sending Unit	Sending Unit Location	Torque	
			N·m	Lb-Ft
5.8L (MFI)	Oil Pressure	Front of Cylinder Block, Lower Left Side	11-24	8-18
5.8L (MFI)	Engine Coolant Temperature	LH Front Side of Intake Manifold	11-24	8-18
7.5L (MFI)	Oil Pressure	Rear of Cylinder Block — Top	11-24	8-18
7.5L (MFI)	Engine Coolant Temperature	Lower Intake Manifold — Front	11-24	8-18
7.3L Diesel	Oil Pressure	Rear of Cylinder Block — Top	20	15
7.3L Diesel	Engine Coolant Temperature	Rear of Cylinder Head — Left Side	20	15
7.3L Diesel	Diesel	Injection Pump Adapter Housing	22-27	16-20
7.3L Diesel	Oil Pressure	Rear of Cylinder Head — Top	20	15
7.3L Diesel	Diesel	Injection Pump Adapter Housing	22-27	16-20

TORQUE SPECIFICATIONS

Description	N·m	Lb-In
Screw, Instrument Cluster	1.9-2.5	17-22
Screw, Automatic Transmission Range Indicator or Transmission Range Indicator Opening Cover	1.4	12

Original Licensed Product
Ford Motor Company

SPECIAL SERVICE TOOLS/EQUIPMENT

ROTUNDA EQUIPMENT

Model	Description
007-00500	New Generation Star (NGS) Tester
014-R1063	Instrument Gauge System Tester
105-00053	88 Digital Multimeter

SECTION 13-06 Horn

SUBJECT	PAGE
VEHICLE APPLICATION	13-06-1
DESCRIPTION AND OPERATION	
Horn Mounting Location	13-06-1
Horn Switch, Steering Wheel Mounted	13-06-1
Horn System	13-06-1
DIAGNOSIS AND TESTING	
Electrical Schematic Reference(s)	13-06-1
Horn	13-06-1
Inspection and Verification	13-06-1
DIAGNOSIS AND TESTING (Cont'd.)	
Pinpoint Tests	13-06-2
Symptom Chart	13-06-2
REMOVAL AND INSTALLATION	
Horn Assembly	13-06-3
Horn Relay	13-06-4
Horn Switch	13-06-4
SPECIFICATIONS	13-06-4
SPECIAL SERVICE TOOLS/EQUIPMENT	13-06-5

VEHICLE APPLICATION

F-250 Heavy Duty, F-350 and F-Super Duty

DESCRIPTION AND OPERATION

Horn System

Dual horns (13832) are standard on all vehicles.

Official Licensed Product Ford Motor Company

Horn Switch, Steering Wheel Mounted

A steering wheel mounted horn button completes the circuit direct to the horns. A horn relay and bracket (13853) is used on all vehicles.

Horn Mounting Location

Both the high and low pitch horns (13832) are mounted to the right back side of the radiator support.

DIAGNOSIS AND TESTING

Electrical Schematic Reference(s)

Refer to Electrical and Vacuum Troubleshooting Manual, Cell 4, Horn / Cigar Lighter for schematic and connector information.

Horn

Inspection and Verification

1. Verify the vehicle owner's original concern by operating the horn system to duplicate the vehicle owner's concern.
2. Inspect to determine if one of the following mechanical or electrical concerns apply:

VISUAL INSPECTION CHART

Mechanical	Electrical
• Verify that horn attaching bolts are tight • Verify that horns are not touching surrounding sheet metal or other components	• Verify that the ground of the horn is good by inspecting connection for corrosion • Check system fuse • Check wiring for obvious short or opens • Check connectors for obvious damage

DIAGNOSIS AND TESTING (Continued)

3. If the concern(s) remains after the inspection, determine the symptom(s) and proceed to the following symptom chart.

NOTE: Use Rotunda Digital Volt-Ohmmeter 014-00407 or equivalent to perform electrical pinpoint tests.

Symptom Chart

Refer to the Electrical and Vacuum Troubleshooting Manual for the connector numbers in the pinpoint tests.

HORN SYSTEM

Condition	Possible Source	Action
• Horn Sounds Continuously	• Short in horn circuit or damaged component.	• GO to Pinpoint Test A.
• Horn System Inoperative	• Open in horn circuit or damaged component.	• GO to Pinpoint Test B.

Pinpoint Tests

PINPOINT TEST A: HORN SOUNDS CONTINUOUSLY

Test Step		Result ▶	Action to Take
A1	CHECK HORN SWITCH CIRCUIT FOR SHORT		
	• Remove relay. • Disconnect positive battery cable and wait one minute. • Using Rotunda Digital Volt-Ohmmeter 014-00407 or equivalent connected to a known good ground, connect other lead to Circuit 1 (DB) at horn relay connector C202. • **Is resistance 5 ohms or less?**	Yes ▶ No ▶	GO to **A2**. REPLACE shorted horn relay. RESTORE vehicle. RETEST system.
A2	CHECK HORN SWITCH FOR SHORT		
	• Disconnect horn switches. • With ohmmeter still connected to horn relay connector C202 and ground, read resistance. • **Is resistance 5 ohms or less?**	Yes ▶ No ▶	GO to **A3**. REPLACE shorted horn switch. RESTORE vehicle. RETEST system.
A3	CHECK FOR SHORTED AIR BAG SLIDING CONTACT		
	• Disconnect ohmmeter from horn relay connector C202. • Carefully check resistance of each contact. • **Is resistance 5 ohms or less?**	Yes ▶ No ▶	REPLACE sliding contact. RESTORE vehicle. RETEST system. SERVICE short to ground Circuit 6 (Y/LG). RESTORE vehicle as outlined. RETEST system.

PINPOINT TEST B: HORN SYSTEM INOPERATIVE

Test Step		Result ▶	Action to Take
B1	PRELIMINARY CHECK		
	• Check Fuse C (30 A, F-Series) (20 A, Motorhome). • Check connections for clean, tight fit. • Check wiring harness for obvious damage. • **Are components and wiring OK?**	Yes ▶ No ▶	GO to **B2**. SERVICE as required. RETEST system.
B2	CHECK HORN POWER SUPPLY		
	• Disconnect either horn connector. • Using a test light, check for voltage at horn connector when horn switch is pressed. • **Is voltage present?**	Yes ▶ No ▶	REPLACE horns. RETEST system. GO to **B3**.
B3	CHECK HORN RELAY SUPPLY		
	• Remove horn relay from the engine compartment fuse box. • Using a test light, check for voltage in Circuit 460 (Y/LB) at relay Pins 30 and 86. • **Is voltage present?**	Yes ▶ No ▶	GO to **B5**. GO to **B4**.

Official Licensed Product Ford Motor Company

DIAGNOSIS AND TESTING (Continued)

PINPOINT TEST B: HORN SYSTEM INOPERATIVE (Continued)

Test Step		Result	Action to Take
B4	CHECK CIRCUIT 460 (Y/LB) FOR OPEN		
	• Remove Fuse C from the engine compartment fuse box. • Using a Rotunda Digital Volt-Ohmmeter 014-00407 or equivalent, check Circuit 460 (Y/LB) for continuity between relay Pins 30 and 86 and Fuse C output cavity. • **Is continuity present?**	Yes ▶ No ▶	SERVICE Fuse C power supply from battery for open. RETEST system. SERVICE Circuit 460 (Y/LB) for open. RETEST system.
B5	CHECK RELAY COIL GROUND		
	• Connect an ohmmeter between horn relay coil ground Pin 85 and known good ground. • Check for continuity while pressing horn switch. • **Is continuity present?**	Yes ▶ No ▶	GO to **B6**. GO to **B7**.
B6	CHECK CIRCUIT 6 (Y/LG) FOR OPEN		
	• Connect ohmmeter between horn relay output Pin 87, and Circuit 6 (Y/LG) at the horn connector. • **Is continuity present?**	Yes ▶ No ▶	REPLACE horn relay. RETEST system. SERVICE Circuit 6 (Y/LG) for open. RETEST system.
B7	CHECK CIRCUIT 1 (DB)		
	• Disconnect horn switch connector. • Connect ohmmeter between horn relay coil ground Pin 85, and Circuit 1 (DB) Pin 6 at clock spring connector. • Check for continuity. • **Is continuity present?**	Yes ▶ No ▶	GO to **B8**. SERVICE Circuit 1 (DB) for open. RETEST system.
B8	CHECK HORN SWITCH		
	• Connect ohmmeter between clock spring connector Pin 2 Circuit 848 (DG/O), and known good ground. • Check for continuity. • **Is continuity present?**	Yes ▶ No ▶	REPLACE horn switch. RETEST system. GO to **B9**.
B9	CHECK CIRCUIT 848 (DG/O) FOR OPEN		
	• Disconnect speed control connector. • Connect ohmmeter between clock spring connector Pin 2, and speed control servo connector Pin 6. • Check for continuity. • **Is continuity present?**	Yes ▶ No ▶	GO to **B10**. SERVICE Circuit 848 (DG/O) for open. RETEST system.
B10	CHECK GROUND CIRCUIT FOR OPEN		
	• Connect ohmmeter between speed control servo connector Pin 10, and known good ground. • **Is continuity present?**	Yes ▶ No ▶	REPLACE speed control servo. RETEST system. SERVICE Circuit 901 (R/LB) and 875 (BK/LB) for open. RETEST system.

Official Licensed Product

REMOVAL AND INSTALLATION

Horn Assembly

Removal

1. Remove battery cables from battery terminals.
2. Remove battery hold-down bracket by removing one bolt.
3. Remove battery (10655).
4. Take out battery tray by removing two bolts on the passenger fender well and two bolts from the bottom of the battery tray. Remove one bolt from the passenger fender well to remove battery tray brace.
5. Disconnect wires from horn terminals.
6. Remove bracket bolt and horn assembly.

Installation

1. Follow removal procedure in reverse order.
2. Tighten mounting bolt to 8-12 N·m (71-106 lb-in).

REMOVAL AND INSTALLATION (Continued)

Horn Installation

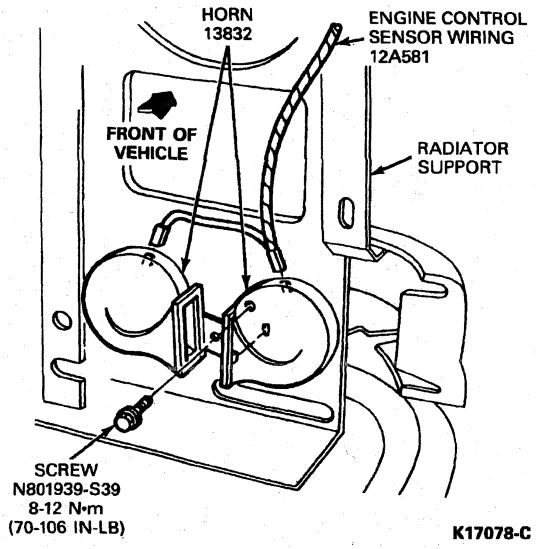

Horn Switch

Removal

1. Unsnap steering wheel pad horn switch (13A805) from steering wheel (3600) by grasping the sides of the steering wheel pad horn switch and pulling toward yourself.
2. Disconnect the horn relay and bracket (13853) and speed control cable (9A840). Remove the steering wheel pad horn switch from the steering wheel.

Steering Wheel Horn Switch

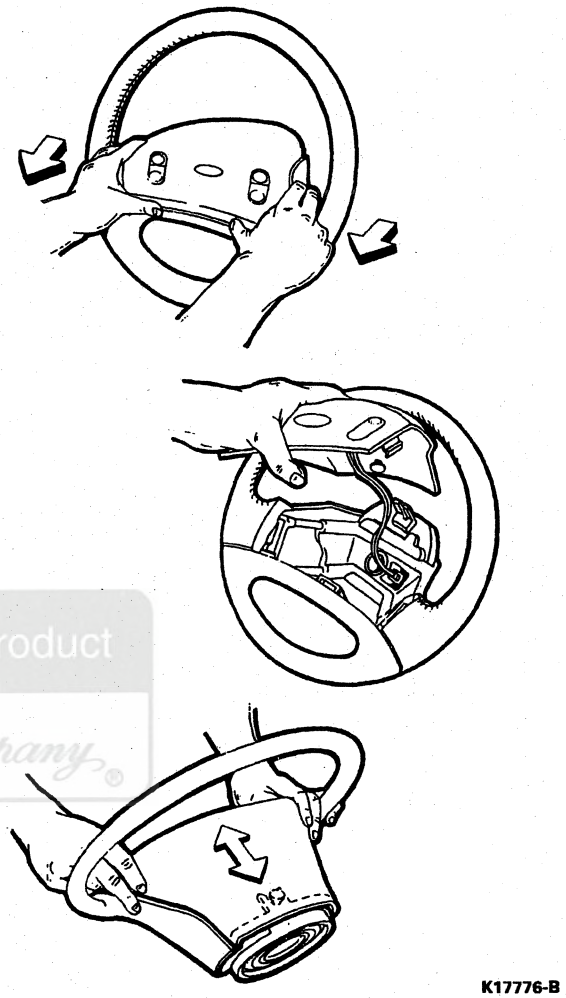

Installation

1. Connect the horn relay and bracket and speed control cable. Install the steering wheel pad horn switch to steering wheel.
2. Grasp sides of steering wheel pad horn switch and snap onto steering wheel.

Horn Relay

A horn relay is used on all vehicles. It is located inside the power distribution box.

SPECIFICATIONS

TORQUE SPECIFICATIONS

Description	N·m	Lb-in
Horn Assembly Mounting Bolt	8-12	71-106

Official Licensed Product
Ford Motor Company

SPECIAL SERVICE TOOLS/EQUIPMENT

ROTUNDA EQUIPMENT

Model	Description
014-00407	Digital Volt-Ohmmeter

Official Licensed Product
Ford Motor Company

SECTION 13-09 Gauges/Warning Devices, Chime/Buzzer System

SUBJECT	PAGE
VEHICLE APPLICATION	13-09-1
DESCRIPTION AND OPERATION	
Headlamp Switch On Warning (Available on Some Models)	13-09-2
Key-in-Ignition Warning	13-09-1
Safety Belt Warning	13-09-1
Warning Chime/Buzzer System	13-09-1
DIAGNOSIS AND TESTING	
Electrical Schematic Reference(s)	13-09-2
Gauges/Warning Devices, Chime/Buzzer System	13-09-2
DIAGNOSIS AND TESTING (Cont'd.)	
Inspection and Verification	13-09-2
Pinpoint Tests	13-09-3
Symptom Chart	13-09-2
REMOVAL AND INSTALLATION	
Buzzer Module	13-09-7
Warning Chime Module	13-09-6
SPECIAL SERVICE TOOLS/EQUIPMENT	13-09-7

VEHICLE APPLICATION

F-250 Heavy Duty, F-350 and F-Super Duty

DESCRIPTION AND OPERATION

Official Licensed Product Ford Motor Company

Warning Chime/Buzzer System

The warning chime/buzzer module produces a repetitive chime or steady buzzing sound for the following conditions:

- key-in-ignition warning with driver door open
- fasten safety belt warning
- headlamp-on warning (available on some models)

Key-in-Ignition Warning

The warning chime/buzzer sounds when the driver door is open with the key in the ignition switch lock cylinder (11582), and continues to sound until the key is removed or the door is closed. When the key is in the ignition switch lock cylinder, the key-in-ignition switch is closed and ground is supplied to the warning chime/buzzer module through Circuit 158 (BK/PK). When the driver door is open, the driver door lamp switch (13713) is closed and power is supplied to the module through Circuit 159 (R/PK).

Safety Belt Warning

When the key is turned to RUN or START, power is supplied through Circuit 640 (R/Y) to the warning chime/buzzer module, which then supplies power through Circuit 450 (DG/LG) to illuminate the fasten belts indicator for six seconds, whether or not the driver safety belt is buckled.

The safety belt warning will sound for approximately six seconds unless the driver safety belt is buckled.

DESCRIPTION AND OPERATION (Continued)

Headlamp Switch On Warning (Available on Some Models)

The warning chime/buzzer sounds when the headlamp switch (11654) is in PARK or HEAD and the driver door is open, and continues to sound until the headlamp switch is moved to OFF or the door is closed. When the headlamp switch is in PARK or HEAD, power is supplied through Circuit 14 (BR) to the module. When the driver door is open, the driver door lamp switch (13713) is closed and power is supplied to the module through Circuit 159 (R/PK).

DIAGNOSIS AND TESTING

Electrical Schematic Reference(s)

Refer to Electrical and Vacuum Troubleshooting Manual, Cell 66, Warning Chime for schematic and connector information.

Gauges/Warning Devices, Chime/Buzzer System

Inspection and Verification

1. Verify the vehicle owner's original concern by operating the warning chime system to duplicate the vehicle owner's concern.
2. Inspect to determine if one of the following electrical concerns apply.

VISUAL INSPECTION CHART

Electrical
• Check system fuses
• Check connectors for loose connection, damage, corrosion

3. If the concern(s) remains after the inspection, determine the symptom(s) and proceed to the following symptom chart.

Symptom Chart

Refer to the Electrical and Vacuum Troubleshooting Manual for the connector numbers in the pinpoint tests.

NOTE: Use Rotunda 73 Digital Multimeter 105-R0051 or equivalent when performing the following pinpoint tests.

Official Licensed Product Ford Motor Company

GAUGES/WARNING DEVICES, CHIME/BUZZER SYSTEM

Condition	Possible Source	Action
• Warning Chime/Buzzer Inoperative	• Fuse. • Circuitry. • Warning chime/buzzer module.	• GO to Pinpoint Test A.
• Safety Belt Warning Inoperative	• Fuse. • Circuitry. • Bulb. • Warning chime/buzzer module.	• GO to Pinpoint Test B.
• Key-in-Ignition Warning Inoperative	• Fuse. • Circuitry. • Key-in-ignition switch. • Warning chime/buzzer module.	• GO to Pinpoint Test C.
• Headlamp On Warning Inoperative	• Fuse. • Circuitry. • Headlamp switch. • Warning chime/buzzer module.	• GO to Pinpoint Test D.

DIAGNOSIS AND TESTING (Continued)

Pinpoint Tests

PINPOINT TEST A: WARNING CHIME/BUZZER INOPERATIVE

Test Step		Result ▶	Action to Take
A1	CHECK FOR SUPPLY VOLTAGE		
	• Key to RUN. • Connect a test lamp to a known good ground. • Connect probe end of test lamp to Pin 7, Circuit 640 (R/Y) at warning chime/buzzer module connector C280. • **Did test lamp illuminate?**	Yes ▶ No ▶	GO to **A4**. GO to **A2**.
A2	CHECK SUPPLY CIRCUIT 640 (R/Y)		
	• Key off. • Disconnect warning chime/buzzer module connector C280. • Using an ohmmeter connected to a known good ground, connect second lead to Pin 7, Circuit 640 (R/Y). • Check for continuity. • **Is continuity present?**	Yes ▶ No ▶	SERVICE Circuit 640 (R/Y) for short to ground. REPLACE Fuse 17 (10A) (Fuse 4 [15A] on Motorhome) in IP fuse panel. RESTORE vehicle. RETEST system. GO to **A3**.
A3	CHECK CIRCUIT 640 (R/Y) FOR OPEN		
	• Disconnect ohmmeter lead from ground and connect lead to output side of Fuse 17 (10A) (Fuse 4 [15A] for Motorhome) in IP fuse panel. • Check for continuity. • **Is continuity present?**	Yes ▶ No ▶	SERVICE power feed to Fuse 17 (10A) (Fuse 4 [15A] on Motorhome) for open. RESTORE vehicle. RETEST system. SERVICE Circuit 640 (R/Y) for open. RESTORE vehicle. RETEST system.
A4	CHECK WARNING CHIME/BUZZER MODULE GROUND		
	• Using an ohmmeter connected to a known good ground, connect second lead to Pin 5, Circuit 57 (BK). • Check for continuity. • **Is continuity present?**	Yes ▶ No ▶	REPLACE warning chime/buzzer module. RESTORE vehicle. RETEST system. SERVICE Circuit 57 (BK) for open. RESTORE vehicle. RETEST system.

PINPOINT TEST B: SAFETY BELT WARNING INOPERATIVE

Test Step		Result ▶	Action to Take
B1	CHECK SAFETY BELT SWITCH INPUT		
	• Unbuckle driver safety belt. • Disconnect warning chime/buzzer module connector C280. • Using an ohmmeter connected to a known good ground, connect second lead to Pin 3, Circuit 85 (BR/LB) at warning chime/buzzer module connector C280. • Check for continuity. • **Is continuity present?**	Yes ▶ No ▶	GO to **B2**. GO to **B5**.
B2	CHECK CIRCUIT 450 (DG/LG) OUTPUT AT MODULE		
	• Reconnect warning chime/buzzer module connector C280. • Using a test lamp connected to a known good ground, connect test lamp probe to Pin 6, Circuit 450 (DG/LG) at warning chime/buzzer module connector C280. • Key to RUN. • **Does test lamp illuminate?**	Yes ▶ No ▶	GO to **B3**. REPLACE warning chime/buzzer module. RESTORE vehicle. RETEST system.
B3	CHECK CIRCUIT 450 (DG/LG) INPUT AT INSTRUMENT CLUSTER		
	• Key off. • Connect test lamp probe to Pin 4, Circuit 450 (DG/LG) at instrument cluster connector C250. • Key to RUN. • **Does test lamp illuminate?**	Yes ▶ No ▶	GO to **B6**. GO to **B4**.

Official Licensed Product

DIAGNOSIS AND TESTING (Continued)

PINPOINT TEST B: SAFETY BELT WARNING INOPERATIVE (Continued)

Test Step		Result ▶	Action to Take
B4	CHECK CIRCUIT 450 (DG/LG) FOR OPEN		
	• Key off. • Disconnect warning chime/buzzer module connector C280. • Using an ohmmeter, connect one lead to Pin 6, Circuit 450 (DG/LG) at warning chime/buzzer module connector C280. Connect second lead to Pin 4, Circuit 450 (DG/LG) at instrument cluster connector C250. • Check for continuity. • **Is continuity present?**	Yes ▶ No ▶	GO to **B6**. SERVICE Circuit 450 (DG/LG) for open. RESTORE vehicle. RETEST system.
B5	CHECK SAFETY BELT BUCKLE SWITCH CIRCUIT 57 (BK) FOR OPEN		
	• Disconnect driver safety belt buckle switch. • Check for continuity between harness connector Circuit 57 (BK) and known good ground. • **Is continuity present?**	Yes ▶ No ▶	SERVICE or REPLACE safety belt buckle switch. RESTORE vehicle. RETEST system. SERVICE Circuit 57 (BK) for open. RESTORE vehicle. RETEST system.
B6	CHECK INSTRUMENT CLUSTER CIRCUIT 57 (BK) FOR OPEN		
	• Remove instrument cluster from instrument panel. Refer to Removal and Installation in Section 13-01. • Disconnect instrument cluster connector C250. • Check instrument cluster connector C250, Circuit 57 (BK), Pin 3 for continuity to known good ground. • **Is continuity present?**	Yes ▶ No ▶	GO to **B7**. SERVICE Circuit 57 (BK) for open. RESTORE vehicle. RETEST system.
B7	CHECK BULB		
	• Remove safety belt indicator/warning bulb. Refer to Section 13-01. • Check bulb for continuity. • **Is bulb OK?**	Yes ▶ No ▶	SERVICE instrument cluster printed circuit for open or REPLACE as required. RESTORE vehicle. RETEST system. REPLACE fasten belts indicator bulb. RESTORE vehicle. RETEST system.

PINPOINT TEST C: KEY-IN-IGNITION WARNING INOPERATIVE

Test Step		Result ▶	Action to Take
C1	CHECK KEY-IN-IGNITION INPUT		
	• Open driver door. • Using a jumper wire connected to a known good ground, connect other end of jumper to Pin 4, Circuit 158 (BK/PK) at warning chime/buzzer module connector C280. • **Does warning chime/buzzer module sound?**	Yes ▶ No ▶	GO to **C2**. GO to **C3**.
C2	CHECK CIRCUIT 158 (BK/PK) FOR OPEN		
	• Disconnect warning chime/buzzer module connector C280. • Disconnect key-in-ignition switch at steering column. • Using an ohmmeter, connect one lead to Pin 4, Circuit 158 (BK/PK) at warning chime/buzzer module connector C280. Connect second lead to Circuit 158 (BK/PK) at key-in-ignition switch connector C219. • Check for continuity. • **Is continuity present?**	Yes ▶ No ▶	REPLACE key-in-ignition switch. RESTORE vehicle. RETEST system. SERVICE Circuit 158 (BK/PK) for open. RESTORE vehicle. RETEST system.

Ford Motor Company Licensed Product

DIAGNOSIS AND TESTING (Continued)

PINPOINT TEST C: KEY-IN-IGNITION WARNING INOPERATIVE (Continued)

Test Step		Result ▶	Action to Take
C3	CHECK CIRCUIT 159 (R/PK) FOR BATTERY VOLTAGE		
	• Disconnect warning chime/buzzer module connector C280. • Check Pin 2 for battery voltage. • **Is battery voltage present?**	Yes ▶ No ▶	REPLACE warning chime/buzzer module. RESTORE vehicle. RETEST system. GO to **C4**.
C4	CHECK CIRCUIT 54 (LB/Y) FOR BATTERY VOLTAGE		
	• Disconnect driver door courtesy lamp switch. • Check for battery voltage on Circuit 54 (LG/Y) of harness connector. • **Is battery voltage present?**	Yes ▶ No ▶	REPLACE driver door courtesy lamp switch. RESTORE vehicle. RETEST system. GO to **C5**.
C5	CHECK CIRCUIT 54 (LG/Y) FOR OPEN		
	• Remove Fuse 8 (15A) from IP fuse panel. • Check Circuit 54 (LG/Y) for continuity between Fuse 8 (15A) output cavity and driver door courtesy lamp switch connector. • **Is continuity present?**	Yes ▶ No ▶	CHECK Fuse 8 (15A) in IP fuse panel and Fuse 20 (60A) in power distribution box for continuity. REPLACE as required. If fuses are OK, SERVICE Circuit 38 (BK/O) for open. RESTORE vehicle. RETEST system. SERVICE Circuit 54 (LG/Y) for open. RESTORE vehicle. RETEST system.

PINPOINT TEST D: HEADLAMP-ON WARNING INOPERATIVE

Test Step		Result ▶	Action to Take
D1	CHECK DRIVER DOOR INPUT		
	• Open driver door. • Using a test lamp connected to a known good ground, connect probe end of test lamp to Pin 2, Circuit 159 (R/PK) at warning chime/buzzer module connector C280. • **Does test lamp illuminate?**	Yes ▶ No ▶	GO to **D2**. GO to **D6**.
D2	CHECK HEADLAMP-ON INPUT		
	• Actuate headlamp switch to the PARK position. • Connect test lamp probe to Pin 1, Circuit 14 (BR) at warning chime/buzzer module connector C280. • **Does test lamp illuminate?**	Yes ▶ No ▶	GO to **D4**. GO to **D3**.
D3	CHECK HEADLAMP SWITCH OUTPUT		
	• Connect test lamp probe to Pin R, Circuit 14 (BR) at headlamp switch connector C273. • **Does test lamp illuminate?**	Yes ▶ No ▶	SERVICE Circuit 14 (BR) for open. RESTORE vehicle. RETEST system. GO to **D5**.
D4	CHECK CIRCUIT 57 (BK) FOR OPEN		
	• Disconnect warning chime/buzzer module connector C280. • Using an ohmmeter, check for continuity between warning chime/buzzer module connector C280 Pin 5 and known good ground. • **Is continuity present?**	Yes ▶ No ▶	REPLACE warning chime/buzzer module. RESTORE vehicle. RETEST system. SERVICE Circuit 57 (BK) for open. RESTORE vehicle. RETEST system.
D5	CHECK HEADLAMP SWITCH POWER FEED		
	• Disconnect headlamp switch connector C273. • Using a test lamp connected to known good ground, connect test lamp probe to headlamp switch connector C273 Pin B2, Circuit 195 (T/W). • **Does test lamp illuminate?**	Yes ▶ No ▶	REPLACE headlamp switch. RESTORE vehicle. RETEST system. SERVICE headlamp switch power feed fault. REFER to Removal and Installation in Section 17-01.

Ford Motor Company

DIAGNOSIS AND TESTING (Continued)

PINPOINT TEST D: HEADLAMP-ON WARNING INOPERATIVE (Continued)

Test Step		Result	Action to Take
D6	CHECK CIRCUIT 54 (LG/Y) FOR BATTERY VOLTAGE		
	• Gain access to driver door courtesy lamp switch. • Using a test lamp connected to a known good ground, connect probe end of test lamp to Circuit 54 (LG/Y) of courtesy lamp switch. • **Does test lamp illuminate?**	Yes ▶ No ▶	GO to **D7**. GO to **D8**.
D7	CHECK CIRCUIT 159 (R/PK) FOR OPEN		
	• Disconnect warning chime/buzzer module connector C280. • Disconnect driver door courtesy lamp switch connector. • Using an ohmmeter, check for continuity between warning chime/buzzer module connector C280 Pin 2 and Circuit 159 (R/BK) on courtesy lamp switch connector. • **Is continuity present?**	Yes ▶ No ▶	REPLACE courtesy lamp switch. RESTORE vehicle. RETEST system. SERVICE Circuit 159 (R/PK) for open. RESTORE vehicle. RETEST system.
D8	CHECK CIRCUIT 54 (LG/Y) FOR OPEN		
	• Remove Fuse 8 (15A) from IP fuse panel. • Check Circuit 54 (LG/Y) for continuity between Fuse 8 (15A) output cavity and driver door courtesy lamp switch connector. • **Is continuity present?**	Yes ▶ No ▶	SERVICE power feed to Fuse 8 (15A) for open. RESTORE vehicle. RETEST system. SERVICE Circuit 54 (LG/Y) for open. RESTORE vehicle. RETEST system.

Official Licensed Product
Ford Motor Company

REMOVAL AND INSTALLATION

Warning Chime Module

Removal

1. Depress plastic tab on warning chime module case to release the warning chime module from the metal bracket.
2. Slide the warning chime module off the metal bracket.
3. Disconnect wiring connector from warning chime module.

Installation

1. Follow removal procedure in reverse order.
2. Check operation of chime.

REMOVAL AND INSTALLATION (Continued)

Warning Chime/Buzzer Module Installation

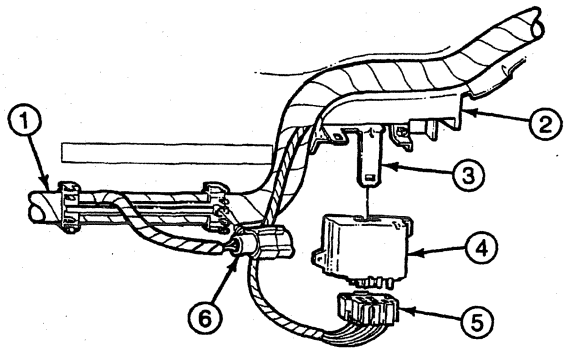

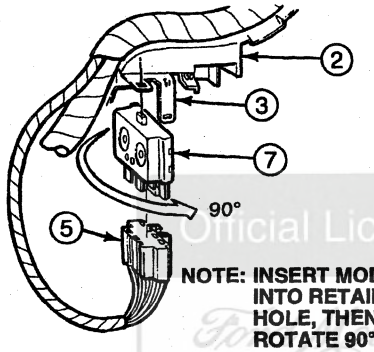

INSTALLATION OF BUZZER MODULE

K24555-A

Item	Part Number	Description
1	14401	Main Wiring
2	04320	Instrument Panel

(Continued)

Item	Part Number	Description
3	10D876	Warning Chime/Buzzer Module Bracket
4	10D840	Warning Chime Module
5	—	Warning Chime/Buzzer Module Connector (Part of 14401)
6	—	Selectable RPM Controller Breakout (Part of 14401)
7	10B924	Warning Buzzer Module

Buzzer Module

Removal

1. Rotate buzzer 90 degrees.
2. Remove buzzer from bracket.
3. Disconnect wiring connector from buzzer module.

Installation

1. Follow removal procedure in reverse order.
2. Check buzzer operation.

Official Licensed Product
Ford Motor Company

SPECIAL SERVICE TOOLS/EQUIPMENT

ROTUNDA EQUIPMENT

Model	Description
105-R0051	73 Digital Multimeter

GROUP

BATTERY AND CHARGING SYSTEM 14

SECTION TITLE	PAGE
BATTERY	14-01-1
BATTERY AND CHARGING SYSTEM, SERVICE	14-00-1
GENERATOR, INTEGRAL REAR MOUNTED REGULATOR, INTERNAL FAN TYPE, 95 AMPERE AND 130 AMPERE	14-02A-1
GENERATOR AND REGULATOR, EXTERNAL FAN TYPE, 215 AMPERE	14-02B-1

SECTION 14-00 Battery and Charging System, Service

SUBJECT	PAGE
VEHICLE APPLICATION	14-00-1
DESCRIPTION AND OPERATION	
Charging System	14-00-1
Generator with Integral Rear Mount Voltage Regulator, Internal Fan Type	14-00-2
DIAGNOSIS AND TESTING	
Charging System	14-00-2
Component Tests	14-00-14
Battery Base Voltage Test	14-00-14
Battery Load Test	14-00-14
Battery No-Load Test	14-00-14
Battery, Capacity Testing	14-00-14
Drain Testing	14-00-14
Field Circuit Drain	14-00-14
DIAGNOSIS AND TESTING (Cont'd.)	
Generator Bench Tests (Integral Rear Mount Regulator, Internal Fan Generator)	14-00-17
Generator On-Vehicle Tests	14-00-15
Inspection and Verification	14-00-2
Pinpoint Tests	14-00-5
Symptom Chart	14-00-3
Electrical Schematic Reference(s)	14-00-2
ADJUSTMENTS	
Drive Belt, Accessory	14-00-17
SPECIFICATIONS	14-00-17
SPECIAL SERVICE TOOLS/EQUIPMENT	14-00-17

VEHICLE APPLICATION

F-250 Heavy Duty, F-350 and F-Super Duty

DESCRIPTION AND OPERATION

Charging System

The charging system consists of the following:

- generator (GEN)(10346)
- charge indicator
- battery (10655)
- associated wiring

This section contains general information applicable to all charging systems and generators. For information on batteries, refer to Section 14-01. For information specific to the generator, refer to Section 14-02A or Section 14-02B.

DESCRIPTION AND OPERATION (Continued)

Generator with Integral Rear Mount Voltage Regulator, Internal Fan Type

With the key in the RUN position, voltage is applied through the charge indicator lamp I circuit to the voltage regulator. This turns the voltage regulator on, allowing current to flow from the battery sense A circuit to the generator field coil. When the engine (6007) is started, the generator (GEN)(10346) begins to generate alternating (AC) current which is converted to direct (DC) current by the rectifier internal to the generator. This current is then supplied to the vehicle's electrical system through the battery positive voltage (B+) terminal located on the rear of the generator.

Once the generator begins generating current, a voltage signal is taken from the stator and fed back to the voltage regulator S circuit, turning off the charge indicator / lamp.

With the system functioning normally, the generator output current is determined by the voltage at the A circuit. This voltage is compared to a set voltage internal to the voltage regulator, and the voltage regulator controls the generator field current to maintain proper generator output. The set voltage will vary with temperature and is typically higher in the winter than in the summer, allowing for better battery recharge.

With the system functioning normally, the generator output current is determined by the voltage of the A circuit (battery sense voltage). The A circuit voltage is compared to a set voltage internal to the voltage regulator, which controls the generator field current to maintain proper output. The set voltage will vary with temperature and is typically higher in the winter than in the summer, allowing for better battery recharge in the winter and reducing the chance of overcharging the battery in the summer.

A fuse link is included in the charging system wiring on all vehicles. The fuse link is used to prevent damage to the wiring harness and generator if the wiring harness should become grounded, or if a booster battery with the wrong polarity is connected to the charging system.

Mitsubishi 215-Ampere Generator

The Mitsubishi 215-ampere generator is an internally regulated, brushless unit that is self-current limiting and temperature compensating. The regulator is integral with the generator and the fan is external.

DIAGNOSIS AND TESTING

Electrical Schematic Reference(s)

Refer to Electrical and Vacuum Troubleshooting Manual, Cell 12, Charging System for schematic and connector information.

Charging System

Inspection and Verification

WARNING: KEEP BATTERIES (10655) OUT OF REACH OF CHILDREN. BATTERIES CONTAIN SULFURIC ACID. AVOID CONTACT WITH SKIN, EYES OR CLOTHING. SHIELD YOUR EYES WHEN WORKING NEAR THE BATTERY TO PROTECT AGAINST POSSIBLE SPLASHING OF THE ACID SOLUTION. IN CASE OF ACID CONTACT WITH SKIN OR EYES, FLUSH IMMEDIATELY WITH WATER FOR A MINIMUM OF 15 MINUTES AND GET PROMPT MEDICAL ATTENTION. IF ACID IS SWALLOWED, CALL A PHYSICIAN IMMEDIATELY.

WARNING: BATTERIES NORMALLY PRODUCE EXPLOSIVE GASES WHICH CAN CAUSE PERSONAL INJURY. THEREFORE, DO NOT ALLOW FLAMES, SPARKS OR LIGHTED SUBSTANCES TO COME NEAR THE BATTERY. WHEN CHARGING OR WORKING NEAR A BATTERY, ALWAYS SHIELD YOUR FACE AND PROTECT YOUR EYES. ALWAYS PROVIDE VENTILATION.

WARNING: WHEN LIFTING A PLASTIC-CASED BATTERY, EXCESSIVE PRESSURE ON THE END WALLS CAN CAUSE ACID TO SPEW THROUGH THE VENT CAPS, RESULTING IN PERSONAL INJURY OR DAMAGE TO THE VEHICLE OR BATTERY. LIFT WITH A BATTERY CARRIER OR WITH YOUR HANDS ON OPPOSITE CORNERS.

1. Verify the vehicle owner's original concern by operating the engine (6007) to duplicate the concern.
2. Inspect to determine if one of the following mechanical or electrical concerns apply.

DIAGNOSIS AND TESTING (Continued)

VISUAL INSPECTION CHART

Mechanical	Electrical
• Before attempting to test a battery, it is important to give it a thorough examination to determine if it has been damaged.	• Batteries are tested to determine the state of charge and ability to crank an engine. The result of these tests is to show that the battery is either good, needs recharging, or must be replaced.
• Preliminary checks to the charging system should be made regardless of the fault condition. These checks include: — Check the fuses / fuse links to the generator to ensure that they are not burned or damaged. This condition, resulting in an open circuit or high resistance, can cause erratic or intermittent charging system concerns. — Check battery posts and cable terminals for clean and tight connections. Clean the posts and the cables to ensure good electrical contact. — Check for secure connections at the generator output, voltage regulator and engine ground. Also check the connection at the power distribution point. — Check the generator drive belt to ensure proper tension and no slip between the generator pulley and the drive belt. Refer to Section 03-05 in the Powertrain, Drivetrain Manual. — Check battery for full charge.	• Before performing charging system tests on the vehicle, note conditions such as: slow cranking, discharged battery, charge indicator lamp stays on with engine running, charge indicator lamp does not illuminate with ignition switch in RUN and engine not running, etc. This information will aid in isolating the part of the system causing the symptom. • When a relatively new battery is discharged, test for current drain. The following are some of the most common current drain concerns: — Glove compartment lamp stays on with the door closed. — Engine compartment lamp stays on constantly. — License plate lamp or interior lamp stays on constantly. — Other electronic component concerns.

3. If the inspection reveals obvious concern(s) that can be readily identified, service as required.
4. If the concern(s) remains after the inspection, determine the symptom(s) and go to the symptom chart.

Mitsubishi 215-Ampere Generator

1. All voltage measurements are referenced to the negative (-) battery post unless otherwise specified.
2. Do not make jumper connections except as directed. Improper connections can damage the voltage regulator or fuses / fuse links.
3. All key on measurements are made with the engine not running unless directed to start engine.

Symptom Chart

Refer to the Electrical and Vacuum Troubleshooting Manual for the connector numbers in the pinpoint tests.

NOTE: Use Rotunda 73 Digital Multimeter 105-R0051 or equivalent to perform electrical pinpoint tests.

Ford Motor Company Licensed Product

BATTERY AND CHARGING SYSTEM

Condition	Possible Source	Action
• System Does Not Charge	• Loose or worn drive belt. • Open / voltage drop in Circuit 38 (BK / O). • Open / voltage drop in Circuit 36 (Y / W). • Open / high resistance in Circuit 904 (LG / R). • Damaged regulator. • Damaged generator battery.	• GO to Pinpoint Test A.
• System Overcharges	• Generator. • Regulator.	• GO to Pinpoint Test B.

DIAGNOSIS AND TESTING (Continued)

BATTERY AND CHARGING SYSTEM (Continued)

Condition	Possible Source	Action
• Indicator Light Stays On, Engine Running	• Open A-Circuit 36 (Y/W). • Shorted I-Circuit 904 (LG/R). • Open/high resistance S Circuit 4 (W/BK). • Damaged regulator. • Generator.	• GO to Pinpoint Test C.
• Indicator Light Stays On, Ignition Switch Off	• Shorted lamp circuit battery voltage. • Open A-Circuit 36 (Y/W). • Shorted I-Circuit 904 (LG/R). • Open/high resistance in S-Circuit 4 (W/BK). • Instrument cluster/connector C250 damaged.	• GO to Pinpoint Test D.
• Indicator Lamp Does Not Come On	• Open in Circuit 904 (LG/R). • Burned-out bulb in instrument cluster.	• GO to Pinpoint Test E.
• Indicator Lamp Flickers/Intermittent	• Damaged ground. • Damaged wiring. • Generator.	• GO to Pinpoint Test F.
• Voltage Gauge Reads High	• Damaged regulator. • Charge indicator. • Generator.	• GO to Pinpoint Test G.
• Voltage Gauge Reads Low	• Charge indicator. • Damaged regulator. • Generator.	• GO to Pinpoint Test H.
• Generator Noisy	• Drive belt. • Generator. • Related components.	• GO to Pinpoint Test J.
• Radio Interference	• Generator. • Damaged regulator. • Other components.	• GO to Pinpoint Test K.
• Battery Does Not Hold a Charge	• Battery drain. • Open or high resistance in wiring. • Damaged regulator. • Generator.	• GO to Pinpoint Test L.

MITSUBISHI 215-AMPERE GENERATOR

Condition	Possible Source	Action
• System Does Not Charge	• Battery connections. • Drive belt. • Battery. • Battery drain. • Open/voltage drop in B+ circuit. • Open A-circuit. • Open/high resistance in I-circuit. • Voltage regulator. • Generator.	• GO to Pinpoint Test M.
• Battery Overcharging (Battery Voltage Greater Than 15.5 V)	• Open A-circuit. • Poor ground. • Voltage regulator. • Generator.	• GO to Pinpoint Test N.
• Indicator Lamp On with Engine Running	• Open B+ circuit. • Open A-circuit. • Shorted I-circuit. • Voltage regulator. • Generator.	• GO to Pinpoint Test P.
• Indicator Lamp Does Not Come On	• Open/poor connection in I-circuit. • Burned-out lamp. • Poor ground. • Voltage regulator.	• GO to Pinpoint Test Q.

Official Ford Product
Ford Motor Company

DIAGNOSIS AND TESTING (Continued)

MITSUBISHI 215-AMPERE GENERATOR (Continued)

Condition	Possible Source	Action
• Indicator Lamp Flickers or Intermittent	• Loose connection at generator, megafuse, voltage regulator, battery or underhood fuse box. • Loose fuse or poor connection in A circuit. • Voltage regulator. • Generator.	• GO to Pinpoint Test R.
• Generator Noisy	• Drive belt. • Accessory brackets. • Bent pulley or fan. • Generator. • Other accessories.	• GO to Pinpoint Test S.
• Radio Interference	• Voltage regulator. • Generator. • Other components.	• GO to Pinpoint Test T.

Pinpoint Tests

PINPOINT TEST A: SYSTEM DOES NOT CHARGE

	Test Step	Result ▶	Action to Take
A1	CHECK BATTERY CONNECTIONS		
	• Inspect the battery positive and negative battery cables for loose or corroded connections. • **Are the battery cables clean and tight?**	Yes ▶ No ▶	GO to **A2**. CLEAN and TIGHTEN the battery cables.
A2	CHECK DRIVE BELT TENSION		
	• Examine drive belt for damage. • Perform the drive belt adjustment procedure. Refer to Section 03-05 in the Powertrain, Drivetrain Manual. • **Is drive belt adjusted properly?**	Yes ▶ No ▶	GO to **A3**. ADJUST or REPLACE the drive belt.
A3	CHECK BATTERY		
	• Perform the battery component tests. Refer to Component Tests in the Diagnosis and Testing portion of this section. • **Is the battery OK?**	Yes ▶ No ▶	PERFORM the generator component tests. REFER to Component Tests in the Diagnosis and Testing portion of this section. REPLACE battery.

PINPOINT TEST B: SYSTEM OVERCHARGES (BATTERY BOILS OVER)

	Test Step	Result ▶	Action to Take
B1	CHECK VOLTAGE DROP IN A CIRCUIT		
	• Key to RUN. • Measure voltage between test point A on the voltage regulator and the positive (+) battery post. • **Is voltage drop less than 0.25 V?**	Yes ▶ No ▶	GO to **B2**. SERVICE excess voltage drop in Circuit 36 (Y/W). CHECK fuse and connectors in Circuit 36 and SERVICE as required.
B2	CHECK VOLTAGE DROP IN I CIRCUIT		
	• Measure voltage at wiring harness I-terminal, Circuit 904 (LG/R). NOTE: Voltage regulator must be connected to wiring harness for this test. • **Is voltage greater than 1 V?**	Yes ▶ No ▶	GO to **B3**. SERVICE high resistance in Circuit 904 (LG/R).
B3	CHECK FOR POOR GROUNDS		
	• Check for poor ground connections between voltage regulator and generator, generator and engine, or engine and battery. • **Are all ground connections clean and tight?**	Yes ▶ No ▶	GO to **B4**. CLEAN or SERVICE grounds as required.

DIAGNOSIS AND TESTING (Continued)

PINPOINT TEST B: SYSTEM OVERCHARGES (BATTERY BOILS OVER) (Continued)

Test Step		Result ▶	Action to Take
B4	CHECK FOR FIELD CIRCUIT VOLTAGE		
	• Key off. • Measure voltage at test point F on the voltage regulator (reference ground). • **Is voltage at test point F equal to battery voltage?**	Yes ▶ No ▶	Generator is OK. REPLACE voltage regulator. GO to **B5**.
B5	CHECK FOR GROUNDED SLIP RING		
	• Remove generator from vehicle. • Remove voltage regulator. • Measure resistance from each generator slip ring to the generator housing. • **Is resistance from either slip ring to housing less than 200 ohms?**	Yes ▶ No ▶	If grease or dirt has accumulated near the slip rings, CLEAN the slip rings and RECHECK resistance. If still less than 200 ohms, REPLACE generator. REPLACE voltage regulator.

PINPOINT TEST C: INDICATOR LAMP STAYS ON, ENGINE RUNNING

Test Step		Result ▶	Action to Take
C1	CHECK FOR OPEN A CIRCUIT		
	• Measure voltage at test point A on the voltage regulator. • **Is voltage at test point A equal to battery voltage?**	Yes ▶ No ▶	GO to **C2**. CHECK fuse in Circuit 36 (Y/W) and REPLACE if required. If OK, SERVICE open in Circuit 36 (Y/W).
C2	CHECK FOR SHORTED I CIRCUIT		
	• Remove three-pin generator regulator connector C154 (gasoline), C1029 (diesel). • Key to RUN. • **Is indicator lamp on?**	Yes ▶ No ▶	SERVICE short to ground in Circuit 904 (LG/R). GO to **C3**.
C3	CHECK S CIRCUIT FUNCTION		
	• Install generator regulator connector C154 (gasoline), C1029 (diesel). • Remove one-pin S-connector. • Connect wiring harness S-terminal, Circuit 4 (W/BK) to the positive (+) battery post using a jumper wire. • **Is indicator lamp on?**	Yes ▶ No ▶	REMOVE jumper wire. GO to **C4**. REMOVE jumper wire. GO to **C5**.
C4	CHECK FOR OPEN S CIRCUIT		
	• Remove three-pin generator regulator connector C154 (gasoline), C1029 (diesel). • Measure wiring resistance between the one-pin S-connector C153 (gasoline), C165 (diesel) and the S (center) pin of the generator regulator connector. • **Is resistance greater than 1 ohm?**	Yes ▶ No ▶	SERVICE open or excess resistance in Circuit 4 (W/BK). CHECK for loose or bent pin in voltage regulator or connector. If OK, REPLACE voltage regulator.
C5	CHECK STATOR OUTPUT VOLTAGE		
	• Start engine. • Measure voltage at the S-terminal on the back of the generator. • **Is voltage at least half of battery voltage?**	Yes ▶ No ▶	GO to **C6**. GO to Pinpoint Test N to find the cause of low generator output.
C6	CHECK GENERATOR OUTPUT VOLTAGE		
	• Measure voltage at the B+ terminal on the back of the generator with the engine running at 2000 rpm and all accessories turned off. • **Is voltage greater than 15.5 V?**	Yes ▶ No ▶	GO to **B1** to find the cause of high output voltage. REPLACE voltage regulator.

Licensed Product Ford Motor Company

DIAGNOSIS AND TESTING (Continued)

PINPOINT TEST D: INDICATOR LAMP STAYS ON, IGNITION SWITCH OFF

Test Step		Result ▶	Action to Take
D1	CHECK LAMP CIRCUIT WIRING		
	• Key off. • Remove three-pin generator regulator connector C154 (gasoline), C1029 (diesel). • Measure voltage at wiring harness I-terminal, Circuit 904 (LG/R). • **Is voltage greater than 0 V?**	Yes ▶ No ▶	SERVICE Circuit 16 (R/LG). Circuit should be hot in RUN position only. SERVICE instrument cluster. REFER to Section 13-01.

PINPOINT TEST E: INDICATOR LAMP DOES NOT COME ON

Test Step		Result ▶	Action to Take
E1	CHECK FOR OPEN I CIRCUIT		
	• Remove three-pin generator regulator connector C154 (gasoline), C1029 (diesel). • Key to RUN. • Measure voltage at wiring harness I-terminal, Circuit 904 (LG/R). • **Is voltage greater than 0 V?**	Yes ▶ No ▶	GO to **E2**. SERVICE open in Circuit 904 (LG/R).
E2	CHECK FOR DAMAGED CHARGE INDICATOR		
	• Connect wiring harness I-terminal, Circuit 904 (LG/R) to ground with a jumper wire. • **Is indicator lamp on?**	Yes ▶ No ▶	REMOVE jumper wire. GO to **E3**. REPLACE charge indicator or SERVICE high resistance in lamp socket or Circuit 904 (LG/R).
E3	CHECK FOR POOR GROUNDS		
	• Check for poor ground connections between voltage regulator and generator, generator and engine, or engine and battery. • **Are all ground connections clean and tight?**	Yes ▶ No ▶	GO to **E4**. CLEAN or SERVICE grounds as required.
E4	CHECK S CIRCUIT WIRING		
	• Remove one-pin S-connector C153 (gasoline), C165 (diesel) from generator. • Measure voltage at wiring harness S-terminal, Circuit 4 (W/BK). • **Is voltage greater than 0 V?**	Yes ▶ No ▶	SERVICE Circuit 4 (W/BK). Circuit should be HOT only when engine is running. CHECK for swapped wires in generator voltage connector. GO to **E5**.
E5	CHECK FOR SHORTED RECTIFIER		
	• Measure voltage at the S-terminal on the back of the generator. • **Is voltage greater than 1 V?**	Yes ▶ No ▶	If lamp is on with one-pin S-connector C153 (gasoline), C165 (diesel) removed, REPLACE generator. REPLACE voltage regulator.

PINPOINT TEST F: INDICATOR LAMP FLICKERS/INTERMITTENT

Test Step		Result ▶	Action to Take
F1	CHECK FOR LOOSE CONNECTIONS		
	• Check these connections for corrosion, loose or bent pins, or loose eyelets: — three-pin generator regulator connector C154 (gasoline), C1029 (diesel) — one-pin S-connector C153 (gasoline), C165 (diesel) — generator B+ eyelet — power distribution box eyelets — battery cables • **Are all connections clean and tight?**	Yes ▶ No ▶	GO to **F2**. CLEAN or SERVICE connections as required.
F2	CHECK FOR FIELD CIRCUIT DRAIN		
	• Key off. • Measure voltage at test point F on the voltage regulator. • **Is voltage at test point F equal to battery voltage?**	Yes ▶ No ▶	GO to **F3**. GO to **F5**.

Ford Licensed Product

DIAGNOSIS AND TESTING (Continued)

PINPOINT TEST F: INDICATOR LAMP FLICKERS/INTERMITTENT (Continued)

Test Step		Result ▶	Action to Take
F3	CHECK FOR LOOSE A CIRCUIT FUSE		
	• Start engine. • Check the generator fuse in the power distribution box for a loose connection by wiggling the fuse with the engine running. • **Does indicator lamp flicker?**	Yes ▶ No ▶	SERVICE loose fuse connection. GO to **F4**.
F4	CHECK A CIRCUIT CONNECTIONS		
	• With engine running, connect test point A on the voltage regulator to the positive (+) battery post using a jumper wire. • **Does indicator lamp flicker?**	Yes ▶ No ▶	REPLACE voltage regulator. If concern still exists, REPLACE generator. SERVICE poor connection in Circuit 36 (Y/W).
F5	CHECK BRUSH HOLDER SCREWS		
	• Remove generator from vehicle. • Check the brush holder screws, located on the voltage regulator (test points F and A). • **Are the brush holder screws tight?**	Yes ▶ No ▶	GO to **F6**. TIGHTEN screws to 2.8-4.0 N·m (25-35 lb-in).
F6	CHECK FOR GROUNDED SLIP RING		
	• Remove voltage regulator. • Measure resistance from each generator slip ring to the generator housing. • **Is resistance from either slip ring to housing less than 200 ohms?**	Yes ▶ No ▶	If grease or dirt has accumulated near the slip rings, CLEAN the slip rings and RECHECK resistance. If still less than 200 ohms, REPLACE generator. REPLACE voltage regulator.

Official Licensed Product Ford Motor Company

PINPOINT TEST G: BATTERY VOLTAGE GAUGE READS HIGH

Test Step		Result ▶	Action to Take
G1	GENERATOR CHECK		
	• Perform generator component test. Refer to Component Tests in the Diagnosis and Testing portion of this section. • **Is the generator OK?**	Yes ▶ No ▶	GO to **G2**. GO to **B1**.
G2	CHECK INSTRUMENT CLUSTER CIRCUIT (LOW)		
	• Key off. • Disconnect and remove the instrument cluster. • Measure the resistance on Pin 14 and Pin 1. • The resistance should read within a 475-525 ohm range. • **Does the resistance read low?**	Yes ▶ No ▶	REPLACE damaged charge indicator gauge (part of oil pressure gauge). System OK.

PINPOINT TEST H: VOLTAGE GAUGE READS LOW

Test Step		Result ▶	Action to Take
H1	CHECK GENERATOR		
	• Perform generator component test. Refer to Component Tests in the Diagnosis and Testing portion of this section. • **Is the generator OK?**	Yes ▶ No ▶	GO to **H2**. GO to **A1**.
H2	CHECK INSTRUMENT CLUSTER CIRCUIT (HIGH)		
	• Key off. • Disconnect and remove the instrument cluster. • Measure the resistance on Pin 14 and Pin 1. • The resistance should read within a 475-525 ohm range. • **Does the resistance read high?**	Yes ▶ No ▶	REPLACE damaged charge indicator gauge (part of oil pressure gauge). System OK.

DIAGNOSIS AND TESTING (Continued)

PINPOINT TEST J: GENERATOR NOISY

Test Step		Result ▶	Action to Take
J1	CHECK FOR ACCESSORY DRIVE NOISE		
	• Using Rotunda Belt Tension Gauge 014-R1056 or equivalent, check the drive belt to make sure it is installed properly and is not damaged. Refer to Section 03-05 in the Powertrain, Drivetrain Manual. • Check the accessory mounting brackets for loose bolts or misalignment condition. • Check for a bent pulley. • **Is accessory drive OK?**	Yes ▶ No ▶	GO to **J2**. GO to Section 03-05 in the Powertrain, Drivetrain Manual and SERVICE accessory drive as required.
J2	SUBSTITUTE KNOWN GOOD GENERATOR		
	• Remove generator and replace with a known good generator. • **Is noise present with a known good generator?**	Yes ▶ No ▶	Generator is OK. INSTALL original generator. CHECK other accessories to find the cause of the noise. REPLACE generator.

PINPOINT TEST K: RADIO INTERFERENCE

Test Step		Result ▶	Action to Take
K1	VERIFY RADIO INTERFERENCE		
	• Start engine. • Tune radio to a station where interference is present. • Remove three-pin generator regulator connector C154 (gasoline), C1029 (diesel). • **Is interference present with connector removed?**	Yes ▶ No ▶	Generator is OK. REFER to Section 15-00 to find the cause of the radio interference. GO to **K2**.
K2	SUBSTITUTE KNOWN GOOD GENERATOR		
	• Remove generator and replace with a known good generator. • **Is interference present with known good generator?**	Yes ▶ No ▶	Generator is OK. REFER to Section 15-00 to find the cause of the radio interference. REPLACE generator.

PINPOINT TEST L: BATTERY DOES NOT HOLD A CHARGE

Test Step		Result ▶	Action to Take
L1	CHECK BATTERY CONNECTIONS		
	• Inspect the battery cables for loose or corroded connections. • **Are the battery cables clean and tight?**	Yes ▶ No ▶	GO to **L2**. CLEAN AND TIGHTEN the battery cables.
L2	CHECK DRIVE BELT TENSION		
	• Perform the drive belt adjustment procedure. Refer to Section 03-05 in the Powertrain, Drivetrain Manual. • **Is the drive belt adjusted properly?**	Yes ▶ No ▶	GO to **L3**. ADJUST or REPLACE the drive belt.
L3	LOOSE BATTERY POST		
	• Check for loose battery posts. • **Are posts OK?**	Yes ▶ No ▶	GO to **L4**. REPLACE battery.
L4	CRACKED BATTERY COVER		
	• Remove battery hold down clamps and shields. • Check for broken/cracked case or battery cover. • **Are case and cover OK?**	Yes ▶ No ▶	GO to **L5**. REPLACE battery.
L5	CHECK BATTERY		
	• Perform the battery capacity test. Refer to Component Tests in the Diagnosis and Testing portion of this section. • **Is battery OK?**	Yes ▶ No ▶	GO to **L6**. REPLACE the battery.

Licensed Product

DIAGNOSIS AND TESTING (Continued)

PINPOINT TEST L: BATTERY DOES NOT HOLD A CHARGE (Continued)

Test Step		Result ▶	Action to Take
L6	CHECK FOR KEY-OFF DRAIN		
	• Perform battery drain test. Refer to Component Tests in the Diagnosis and Testing portion of this section. • **Is correct drain less than 50 Ma (or test lamp off)?**	Yes ▶ No ▶	GO to **L7**. GO to Component Tests in the Diagnosis and Testing portion of this section to find the cause of key-off battery drain.
L7	CHECK FOR OPEN B+ CIRCUIT		
	• Measure voltage at B+ terminal on the back of the generator, Circuit 38 (BK/O). • **Is voltage at B+ terminal equal to battery voltage?**	Yes ▶ No ▶	GO to **L8**. CHECK fuse link in Circuit 38 and REPLACE if required. If OK, SERVICE open in Circuit 38 (BK/O).
L8	CHECK FOR OPEN A CIRCUIT		
	• Measure voltage at test point A on the voltage regulator. • **Is voltage at test point A equal to battery voltage?**	Yes ▶ No ▶	GO to **L9**. CHECK fuse in Circuit 36 and REPLACE if required. If OK, SERVICE open in Circuit 36 (Y/W).
L9	CHECK FOR OPEN FIELD CIRCUIT		
	• Measure voltage at test point F on the voltage regulator. • **Is voltage at test point F equal to battery voltage?**	Yes ▶ No ▶	GO to **L10**. GO to **L16**.
L10	CHECK FOR OPEN I CIRCUIT		
	• Key to RUN. • Measure voltage at wiring harness I-terminal, Circuit 904 (LG/R). NOTE: Voltage regulator must be connected to wiring harness for this test. • **Is voltage greater than 1 V?**	Yes ▶ No ▶	GO to **L11**. SERVICE open or high resistance in Circuit 904 (LG/R).
L11	CHECK VOLTAGE DROP IN A CIRCUIT		
	• Measure voltage drop between test point A on the voltage regulator and the positive (+) battery post. • **Is voltage drop less than 0.25 V?**	Yes ▶ No ▶	GO to **L12**. SERVICE excess voltage drop in Circuit 36 (Y/W). CHECK fuse and connectors in Circuit 36 and SERVICE as required.
L12	CHECK FIELD TURN-ON		
	• Measure voltage at test point F on the voltage regulator. • **Is voltage at test point F less than 2 V?**	Yes ▶ No ▶	GO to **L13**. GO to **L16**.
L13	CHECK FOR SHORTED RECTIFIER		
	• Remove one-pin S-connector C153 (gasoline), C165 (diesel) from generator. • Measure voltage between the S-terminal on the back of the generator and ground. • Measure voltage between the positive (+) battery terminal and the S-terminal on the back of the generator. • **Is either voltage reading greater than 1 V?**	Yes ▶ No ▶	REPLACE generator. GO to **L14**.
L14	CHECK VOLTAGE DROP IN B+ CIRCUIT		
	• Install S-connector C153 (gasoline), C165 (diesel). • Start engine. • Turn headlights on and set blower motor switch on HI. • With engine running at 2000 rpm, measure voltage drop between the B+ terminal on the back of the generator and the positive (+) battery post. • **Is voltage drop less than 0.5 V?**	Yes ▶ No ▶	GO to **L15**. SERVICE excess voltage drop in Circuit 38 (BK/O). CHECK fuse link in Circuit 38 and the connections between the battery and power distribution box.

Official Licensed Product Ford Motor Company

DIAGNOSIS AND TESTING (Continued)

PINPOINT TEST L: BATTERY DOES NOT HOLD A CHARGE (Continued)

	Test Step	Result ▶	Action to Take
L15	CHECK FOR OPEN STATOR PHASE		
	• Connect test point F on the voltage regulator to the negative (-) battery post using a jumper wire. • Perform Generator No-Load Test. Refer to Component Tests in the Diagnosis and Testing portion of this section. • **Is generator output greater than the minimum output specified?**	Yes ▶ No ▶	REPLACE voltage regulator. REPLACE generator.
L16	CHECK FOR OPEN / SHORTED FIELD		
	• Remove generator from vehicle. • Remove voltage regulator. • Measure resistance between the generator slip rings. • **Is resistance greater than 10 ohms or less than 1 ohm?**	Yes ▶ No ▶	REPLACE generator. CHECK for worn brushes (less than 8 mm long) or open brush leads and REPLACE if required. If OK, REPLACE voltage regulator.

PINPOINT TEST M: SYSTEM DOES NOT CHARGE 215 AMPERE GENERATOR

	Test Step	Result ▶	Action to Take
M1	CHECK BATTERY CONNECTIONS		
	• Check the battery ground cables for loose or corroded connections. • **Are the battery connections clean and tight?**	Yes ▶ No ▶	GO to **M2**. CLEAN or TIGHTEN the battery ground cables.
M2	CHECK DRIVE BELT		
	• Check the drive belt for damage or improper tension. Refer to Section 03-05 in the Powertrain, Drivetrain Manual. • **Is the drive belt OK?**	Yes ▶ No ▶	GO to **M3**. ADJUST or REPLACE the drive belt.
M3	CHECK BATTERIES		
	• Perform the battery capacity test. Refer to Component Tests in the Diagnosis and Testing portion of this section. • **Are the batteries OK?**	Yes ▶ No ▶	GO to **M4**. REPLACE defective battery.
M4	CHECK FOR BATTERY DRAIN		
	• Perform the battery drain test. Refer to Component Tests in the Diagnosis and Testing portion of this section. NOTE: Disconnect the negative (-) terminal of one of the batteries. • **Is current drain less than 200 mA (or test lamp off)?**	Yes ▶ No ▶	GO to **M5**. LOCATE battery drain and SERVICE as required.
M5	CHECK FOR OPEN B+ CIRCUIT		
	• Connect both batteries. • Measure voltage at B+ terminal on the back of the generator. • **Is voltage at B+ terminal equal to battery voltage?**	Yes ▶ No ▶	GO to **M6**. CHECK megafuse in B+ circuit and REPLACE if required. If OK, SERVICE open circuit in B+ wiring.
M6	CHECK FOR OPEN A CIRCUIT		
	• Remove voltage regulator connector C112. • Measure voltage at wiring harness A-terminal. • **Is voltage at A-terminal equal to battery voltage?**	Yes ▶ No ▶	GO to **M7**. CHECK fuse in A-circuit and REPLACE if required. If OK, SERVICE open circuit in A wiring.
M7	CHECK FOR OPEN I CIRCUIT		
	• Install voltage regulator connector C112. • Key to RUN. • Measure voltage at wiring harness I-terminal. • **Is voltage greater than 1 V?**	Yes ▶ No ▶	GO to **M8**. SERVICE open circuit or high resistance in I wiring.

Official Licensed Product Ford Motor Company

DIAGNOSIS AND TESTING (Continued)

PINPOINT TEST M: SYSTEM DOES NOT CHARGE 215 AMPERE GENERATOR (Continued)

Test Step		Result ▶	Action to Take
M8	CHECK VOLTAGE DROP IN B+ CIRCUIT		
	• Start engine. • Turn headlights on and set blower motor switch on HI. • Increase engine speed to 2000 rpm and measure voltage drop between the B+ terminal on the back of the generator and the positive (+) battery post. • **Is voltage drop less than 0.5 V?**	Yes ▶ No ▶	REPLACE generator rear assembly. SERVICE cause of voltage drop pin B+ circuit. CHECK the megafuse in B+ circuit and the connections at the battery and underhood fuse box.

PINPOINT TEST N: SYSTEM OVERCHARGES (BATTERY BOILS OVER)

Test Step		Result ▶	Action to Take
N1	CHECK FOR OPEN A CIRCUIT		
	• Remove voltage regulator connector C112. • Measure voltage at wiring harness A-terminal. • **Is voltage at A-terminal equal to battery voltage?**	Yes ▶ No ▶	GO to **N2**. CHECK fuse in A-circuit and REPLACE if required. If OK, SERVICE open circuit in A wiring.
N2	CHECK FOR POOR GROUNDS		
	• Check for poor ground connections between generator and engine, or engine and battery. • **Are all ground connections clean and tight?**	Yes ▶ No ▶	REPLACE generator. CLEAN or SERVICE grounds as required.

PINPOINT TEST P: INDICATOR LAMP STAYS ON, ENGINE RUNNING

Test Step		Result ▶	Action to Take
P1	CHECK FOR OPEN B+ CIRCUIT		
	• Measure voltage at B+ terminal on the back of the generator. • **Is voltage at B+ terminal equal to battery voltage?**	Yes ▶ No ▶	GO to **P2**. CHECK the megafuse in B+ circuit and REPLACE if required. If OK, SERVICE open circuit in B+ wiring.
P2	CHECK FOR OPEN A CIRCUIT		
	• Remove voltage regulator connector C112. • Measure voltage at wiring harness A-terminal. • **Is voltage at A-terminal equal to battery voltage?**	Yes ▶ No ▶	GO to **P3**. CHECK fuse in A-circuit and REPLACE if required. IF OK, SERVICE open circuit in A wiring.
P3	CHECK FOR SHORTED I CIRCUIT		
	• Key to run with voltage regulator connector C112 removed. • **Is indicator lamp on?**	Yes ▶ No ▶	SERVICE short circuit in I wiring. GO to **P4**.
P4	CHECK GENERATOR OUTPUT VOLTAGE		
	• Install voltage regulator connector C112. • Start engine. • Turn off all electrical accessories. • Increase engine speed to 2000 rpm and measure battery voltage. • **Is voltage greater than 15.5 V?**	Yes ▶ No ▶	GO to Pinpoint Test N to find the cause of high output voltage. REPLACE generator rear assembly.

PINPOINT TEST Q: INDICATOR LAMP DOES NOT COME ON

Test Step		Result ▶	Action to Take
Q1	CHECK FOR OPEN I CIRCUIT		
	• Remove voltage regulator connector C112. • Key to RUN. • Measure voltage at wiring harness I-terminal. • **Is voltage greater than 0 V?**	Yes ▶ No ▶	GO to **Q2**. SERVICE open circuit in I wiring.
Q2	CHECK FOR BURNED-OUT BULB		
	• Connect wiring harness I-terminal to ground with a jumper wire. • **Is indicator lamp on?**	Yes ▶ No ▶	REMOVE jumper wire. GO to **Q3**. REPLACE lamp or SERVICE poor connection in lamp socket.

DIAGNOSIS AND TESTING (Continued)

PINPOINT TEST Q: INDICATOR LAMP DOES NOT COME ON (Continued)

Test Step		Result ▶	Action to Take
Q3	CHECK FOR POOR GROUND		
	• Check for a poor ground connection between generator and engine or engine and battery. • **Are all ground connections clean and tight?**	Yes ▶	REPLACE generator rear assembly.
		No ▶	CLEAN or SERVICE grounds as required.

PINPOINT TEST R: INDICATOR LAMP FLICKERS/INTERMITTENT

Test Step		Result ▶	Action to Take
R1	CHECK FOR LOOSE CONNECTIONS		
	• Check the following for corrosion or loose connections: — voltage regulator connector C112 — generator B+ wire — megafuse — underhood fuse box — battery ground cables • **Are all connections clean and tight?**	Yes ▶	GO to **R2**.
		No ▶	CLEAN or SERVICE connections as required.
R2	CHECK FOR LOOSE A CIRCUIT FUSE		
	• Start engine. • Check the generator fuse in the underhood fuse box for a loose connection by wiggling the fuse with the engine running. • **Does indicator lamp flicker?**	Yes ▶	SERVICE loose fuse connection.
		No ▶	REPLACE generator rear assembly.

PINPOINT TEST S: GENERATOR NOISY

Test Step		Result ▶	Action to Take
S1	CHECK FOR ACCESSORY DRIVE NOISE		
	• Using Rotunda Belt Tension Gauge 014-R1056 or equivalent, check the drive belt for damage or improper tension. Refer to Section 03-05 in the Powertrain, Drivetrain Manual. • Check all accessory mounting brackets for loose bolts or misalignment. • Check for a bent pulley. • **Is accessory drive OK?**	Yes ▶	GO to **S2**.
		No ▶	SERVICE accessory drive as required.
S2	SUBSTITUTE KNOWN GOOD GENERATOR		
	• Remove generator and replace with a known good generator. • **Is noise present with known good part?**	Yes ▶	Generator is OK. INSTALL original part. CHECK other accessories to find the cause of the noise.
		No ▶	REPLACE generator front assembly.

PINPOINT TEST T: RADIO INTERFERENCE

Test Step		Result ▶	Action to Take
T1	VERIFY RADIO INTERFERENCE		
	• Start engine. • Tune radio to a station where interference is heard. • Stop engine. • Remove voltage regulator connector C112 and B+ wire. • Start engine. • **Is interference present with connectors removed?**	Yes ▶	Generator is OK. REFER to Section 15-00 to find the cause of the radio interference.
		No ▶	GO to **T2**.
T2	SUBSTITUTE KNOWN GOOD GENERATOR		
	• Remove generator and replace with a known good generator. • **Is interference present with known good part?**	Yes ▶	Generator is OK. REFER to Section 15-00 to find the cause of the radio interference.
		No ▶	REPLACE generator rear assembly.

Ford Motor Company Confidential Licensed Product

DIAGNOSIS AND TESTING (Continued)

Component Tests

Battery, Capacity Testing

To perform this test, use a high rate discharge tester, Rotunda Alternator, Regulator, Battery and Starter Tester (ARBST) 010-00725 or equivalent, in conjunction with Rotunda 73 Digital Multimeter 105-R0051 or equivalent.

1. Turn the control knob on the ARBST to the OFF position.
2. Turn the multimeter selector switch to the DV volt position.
3. Connect ARBST and multimeter positive test leads to the positive battery post and both negative test leads to the negative battery post. The multimeter clips must contact the battery posts and not the ARBST tester clips. Unless this is done, the actual battery terminal voltage will not be indicated.
4. Turn the load control knob in a clockwise direction until the ammeter reads approximately half of the cold cranking amps of the battery.
5. With the ammeter reading the required load for 15 seconds, note the multimeter reading. Avoid leaving the high discharge load on the battery for periods longer than 15 seconds.
6. If the multimeter reading is 9.6 volts at 21°C (70°F) or more, the battery has a good output capacity and will readily accept a charge, if required.
7. If the voltage reading obtained during the capacity test is below 9.6 volts at 21°C (70°F), and the battery is fully charged, the battery is defective and must be replaced. If unsure about the battery's state of charge, charge the battery.
8. After the battery has been charged, repeat the capacity test. If the capacity test battery voltage is still less than 9.6 volts at 21°C (70°F), replace the battery. If the voltage is 9.6 or more at 21°C (70°F), the battery is satisfactory for service.
9. If the battery is found to be discharged only, check for a loose drive belt, loose electrical connection, charging system performance, and perform battery drain testing as described in this section.

Battery Base Voltage Test

NOTE: Prior to running this test, turn the headlamp bulbs (13007) on for 10-15 seconds to remove any surface charge from the battery. Then, wait until the voltage stabilizes before performing the base voltage test.

1. With the ignition off and no electrical loads on, connect the negative (-) lead of Rotunda 73 Digital Multimeter 105-R0051 or equivalent to the battery ground cable clamp.
2. Connect the positive (+) lead of the voltmeter to the battery to starter relay cable (14300) clamp.
3. Read and record the battery voltage shown on the voltmeter. This is called base voltage and will be used in later tests.

Battery No-Load Test

1. Connect Rotunda 88 Digital Multimeter 105-R0053 or equivalent to monitor engine speed.
2. Connect the leads of Rotunda 73 Digital Multimeter 105-R0051 or equivalent across the battery terminals.
3. Read the voltage (base voltage).
4. Start the engine.
5. Run the engine at 1500 rpm with no electrical load.
6. Read the voltage. The voltage should be in the range of 14.1 to 14.7 volts. If the voltage increase is less than 2.5 volts over the base voltage, perform the following Load Test. If there is no voltage increase or the voltage increase is greater than 2.5 volts, perform the Generator On-Vehicle Tests and Generator Bench Tests in the Diagnosis and Testing portion of this section.

Battery Load Test

1. With the engine running, turn the air conditioner on, if equipped, the blower motor (18527) on high speed and the headlamps on high beam.
2. Increase the engine speed to approximately 2000 rpm. The voltage should increase a minimum of 0.5 volts above the base voltage. If the voltage does not increase as specified, refer to Generator On-Vehicle Tests and Generator Bench Tests in the Diagnosis and Testing portion of this section.

   If the voltage increased as specified, the charging system is operating normally. Proceed to the following battery tests.

Field Circuit Drain

Use Rotunda Power Sensor Plus Electronic Battery Test 162-00002. Follow the manufacturer's defined test procedure.

Drain Testing

Check for current drains on the battery in excess of 50 mA with all the electrical accessories off and the vehicle at rest. Current drains can be tested with the following procedure.

WARNING: DO NOT ATTEMPT THIS TEST ON A LEAD-ACID BATTERY THAT HAS RECENTLY BEEN RECHARGED.

CAUTION: Do not crank the engine or operate accessories that draw more than 10A. You could blow the fuse in the meter.

NOTE: Many computers draw 10 mA or more continuously.

NOTE: Use Rotunda 88 Multimeter 105-R0053 or equivalent between the battery positive or negative post and its respective cable.

1. NOTE: Steps 1-5 correspond to the numbers in the following illustration.

   Insert the test leads in the input terminals shown.
2. Turn switch to mA / A DC.

DIAGNOSIS AND TESTING (Continued)

3. Disconnect battery terminal and touch probes as shown.
4. Isolate circuit causing current drain by pulling out one fuse after another while reading the display.
5. Current reading will drop when the fuse on the bad circuit is pulled.
6. Reinstall fuse and test components (including connectors) of that circuit to find defective component(s).

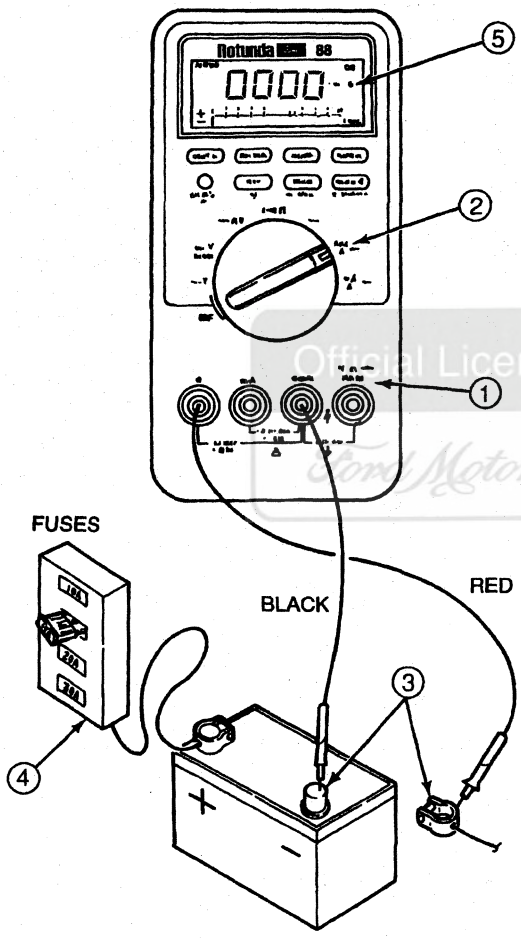

Typically, a drain of approximately one amp can be attributed to an engine compartment lamp, glove compartment lamp, or luggage compartment lamp staying on continually. Other component failures or wiring shorts can be located by selectively pulling fuses or disconnecting fuse links to pinpoint the location of the current drain. When the current drain is found, the test lamp will go out or the meter reading will fall to an acceptable level. If the short is still not located, after checking all the fuses and fuse links, the drain might be due to the generator.

Test Conclusion

The current reading (current drain) should be less than 0.05 amps. If it exceeds 0.05 amps it indicates a constant current drain, which can cause a discharged battery. Possible sources of current drain are vehicle lamps (underhood, glove compartment, luggage compartment, etc.) that do not shut off properly.

If the drain is not caused by a vehicle lamp, remove the fuses from the interior fuse junction panel, one at a time, until the cause of the drain is located. If drain is still undetermined, remove fuses one at a time at the main fuse junction panel to find the problem circuit.

Electronic Drains That Shut Off When the Battery Cable Is Disconnected

- Repeat Steps 1 through 6 of the voltmeter drain testing.
- Without starting engine, turn ignition on for a moment and then off. If applicable, wait one minute for the illuminated entry lamps to turn off.
- Connect the voltmeter and read the voltage.

Test Conclusion

The current reading (current drain) should be less than 0.05 amps. If it exceeds 0.05 amps after a few minutes, and if this drain did not show in previous tests, the drain is most likely caused by a malfunctioning electronic component. As in previous tests, remove the fuses in interior fuse junction panel one at a time to locate the problem circuit.

Generator On-Vehicle Tests

Troubleshooting or diagnosis is required before actual service can be made in the electrical system. Even where an obvious condition makes replacement of a component necessary, find out why the component failed. When a condition is diagnosed correctly, unnecessary service is prevented, the time the vehicle is out of service will be decreased, and the condition will be properly corrected the first time.

In order to check the charging system, the use of Rotunda Alternator, Regulator, Battery and Starter Tester (ARBST) 010-00725 or equivalent tester is suggested.

When performing charging system tests, turn off all lamps and electrical components. Place transmission in neutral and apply parking brake.

Official Licensed Product
Ford Motor Company

DIAGNOSIS AND TESTING (Continued)

CAUTION: Do not make jumper wire connections except as directed. To do so can damage generator.

CAUTION: Do not allow any metal object to come in contact with the housing and internal diode cooling fins with key on or off or short circuit will result and burn out diodes.

NOTE: Battery posts and cable clamps must be clean and tight to ensure accurate meter indications.

Load Test

- Switch the Rotunda Alternator, Regulator, Battery and Starter Tester (ARBST) 010-00725 or equivalent to the ammeter function.
- Connect the positive and negative leads of the Rotunda Alternator, Regulator, Battery and Starter Tester (ARBST) 010-00725 or equivalent to the battery.
- Connect the current probe to the generator B+ output lead, Circuit 38 (BK/O). On Mitsubishi 215 ampere generator, use Circuit 605R.
- With the engine running at 2000 rpm, adjust the Rotunda Alternator, Regulator, Battery and Starter Tester (ARBST) 010-00725 or equivalent load bank to determine the output of the generator. Generator output should be greater than the graph shown below. If not, refer to the symptom chart in the Diagnosis and Testing portion of this section for diagnostic procedures.

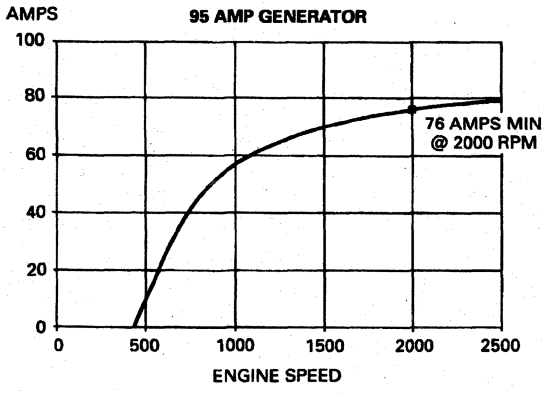

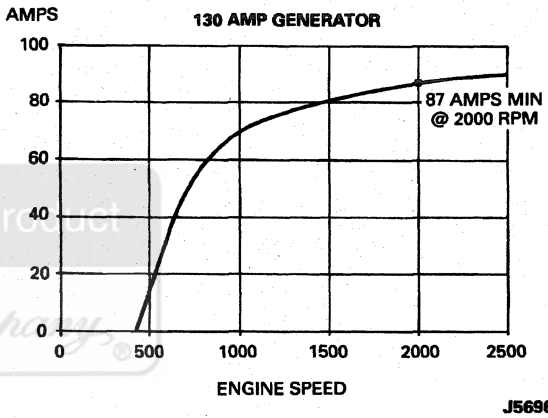

J5696-A

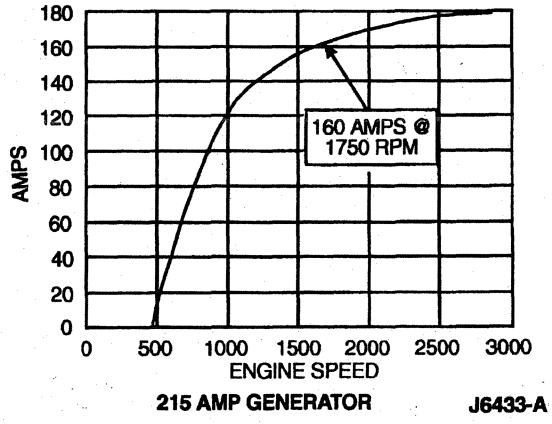

215 AMP GENERATOR J6433-A

No-Load Test

- Switch the Rotunda Alternator, Regulator, Battery and Starter Tester (ARBST) 010-00725 or equivalent to the voltmeter function. Connect the voltmeter positive lead to the generator B+ terminal and the negative lead to ground.
- Turn all electrical accessories off.

Licensed Product Ford Motor Company

DIAGNOSIS AND TESTING (Continued)

- With the engine running at 2000 rpm, check the generator output voltage. The voltage should be between 13.0 and 15.0 volts. If not, refer to the symptom chart in the Diagnosis and Testing portion of this section for diagnostic procedures.

Generator Bench Tests (Integral Rear Mount Regulator, Internal Fan Generator)

NOTE: The integral rear mount regulator — internal fan type generator (GEN)(10300) is serviced as an assembly only.

Replace generator as required after performing generator on-vehicle tests. Refer to Section 14-02B.

Capacitor

The radio voltage regulator capacitor (18832) connected across the heat sinks may be tested on a capacitor tester if available. Its value is 0.158 MFD, and 100 working volts DC.

In the absence of a capacitor tester, the unit can be checked for shorts by means of an ohmmeter connected across the terminals. A reading under 20 milli-ohms indicates a shorted or leaking radio voltage regulator capacitor that should be replaced.

ADJUSTMENTS

Drive Belt, Accessory

Refer to Section 03-05 in the Powertrain, Drivetrain Manual for generator belt tensioning procedure.

Official Licensed Product
Ford Motor Company

SPECIFICATIONS

TORQUE SPECIFICATIONS

Description	N·m	Lb-Ft
Generator Brush Attaching Screws	2.8-4.0	25-35

SPECIAL SERVICE TOOLS/EQUIPMENT

ROTUNDA EQUIPMENT

Model	Description
010-00725	Alternator, Regulator, Battery and Starter Tester (ARBST)
014-R1056	Belt Tension Gauge
105-R0051	Digital Multimeter (73)
105-R0053	88 Digital Multimeter
162-00002	Power Sensor Plus Electronic Battery Test
164-R0254	Dwell-Tach-Volt-Ohms Tester

SECTION 14-01 Battery

SUBJECT	PAGE
VEHICLE APPLICATION	14-01-1
DESCRIPTION AND OPERATION	
Battery	14-01-1
DIAGNOSIS AND TESTING	
Battery	14-01-1
REMOVAL AND INSTALLATION	
Battery	14-01-2
REMOVAL AND INSTALLATION (Cont'd.)	
Battery Charging	14-01-5
Battery Tray	14-01-5
Environmental Protection	14-01-1
SPECIFICATIONS	14-01-5

VEHICLE APPLICATION

F-250 Heavy Duty, F-350 and F-Super Duty

DESCRIPTION AND OPERATION

Battery

The vehicles are equipped with 72 or 84 ampere-hour maintenance-free batteries.

Official Licensed Product
Ford Motor Company

DIAGNOSIS AND TESTING

Battery

Refer to Section 14-00.

REMOVAL AND INSTALLATION

Environmental Protection

Ford Motor Company strongly recommends that lead-acid batteries (10655) be returned to an authorized recycling facility for disposal.

J4961-A

REMOVAL AND INSTALLATION (Continued)

Battery

Removal

1. Remove battery cables from battery terminals (battery ground cable (14301) first).
2. Remove battery hold down clamps (10718).
3. **WARNING: WHEN LIFTING A PLASTIC-CASED BATTERY, AVOID PUTTING PRESSURE ON THE END WALLS, WHICH COULD CAUSE ACID TO SPEW THROUGH THE VENT CAPS, RESULTING IN PERSONAL INJURY OR DAMAGE TO THE VEHICLE OR BATTERY. LIFT WITH A BATTERY CARRIER OR WITH YOUR HANDS ON OPPOSITE CORNERS.**

   Remove battery from vehicle.

Installation

1. Clean cable terminals and hold down with a wire brush. Replace all cables or parts that are worn or frayed.

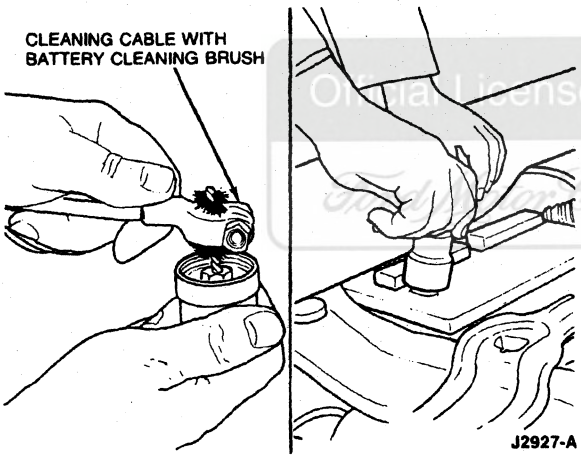

2. Clean battery tray with a wire brush and scraper.
3. Place battery (10655) in tray with positive and negative terminals in the original positions. Assemble and tighten battery hold down clamp so battery is secure. Do not overtighten.
4. NOTE: When the battery has been disconnected and reconnected, some abnormal drive symptoms may occur while the powertrain control module (PCM)(12A650) relearns its adaptive strategy. The vehicle may need to be driven 16 km (10 miles) or more or to relearn the strategy.

   Secure cables (battery to starter relay cable (14300) first) to proper terminals. Do not overtighten. Apply petroleum jelly to terminals.

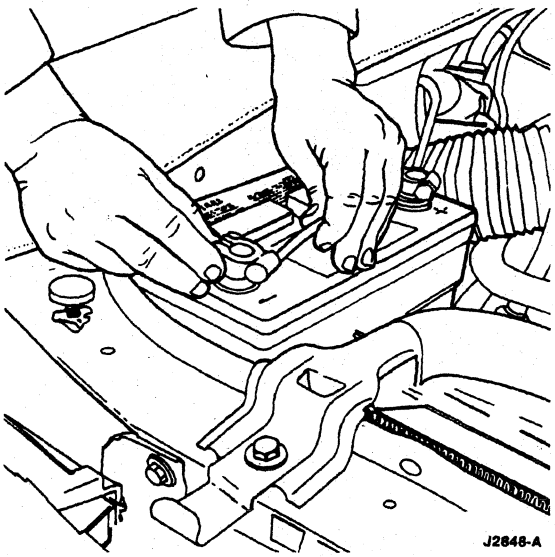

Battery Connections, Typical

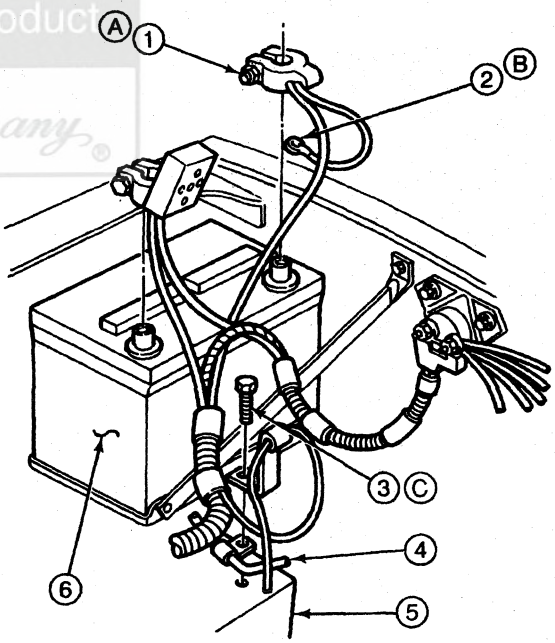

Item	Part Number	Description
1	—	Nut (Part of 14301)
2	14301	Battery Ground Cable (Body Ground)
3	390158-S6	Frame Ground
4	9A228	Fuel Tank Vent Tube
5	5W019	Front Cross Member

(Continued)

REMOVAL AND INSTALLATION (Continued)

Item	Part Number	Description
6	10655	Battery
A	—	Tighten to 13-17 N·m (10-13 Lb-Ft)
B	—	Tighten to 3-4 N·m (27-35 In-Lb)
C	—	Tighten to 12-15 N·m (9-11 Lb-Ft)

Battery Connections, 7.3L Diesel Engine (Left Side)

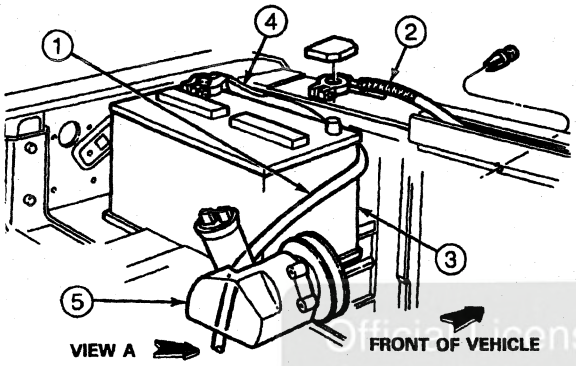

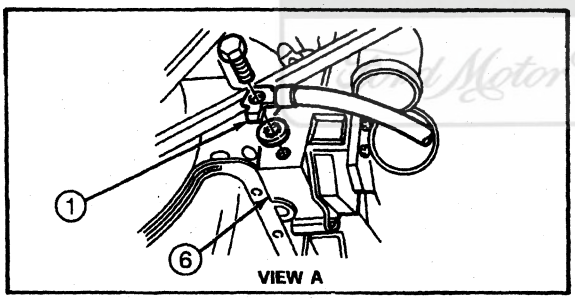

J3897-C

Item	Part Number	Description
1	14301	Battery Ground Cable
2	14300	Battery to Starter Relay Cable
3	10655	Battery

(Continued)

Item	Part Number	Description
4	14301	Battery Ground Cable
5	3A674	Power Steering Pump
6	6007	Engine

Battery Connections, 7.3L Diesel Engine (Right Side)

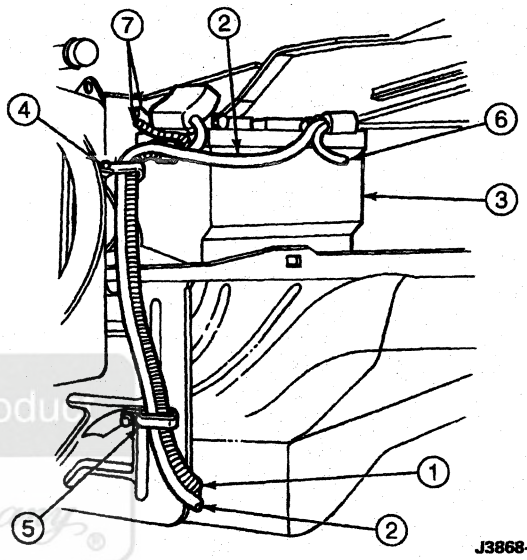

J3868-D

Item	Part Number	Description
1	14300	Battery to Starter Relay Cable
2	14301	Battery Ground Cable
3	10655	Battery
4	8146	Fan Shroud
5	370806-S100	Retaining Bracket
6	14301	Battery Ground Cable
7	14300	Battery to Starter Relay Cable

Ford Motor Company

REMOVAL AND INSTALLATION (Continued)

Battery Connections, F-Super Duty Motorhome

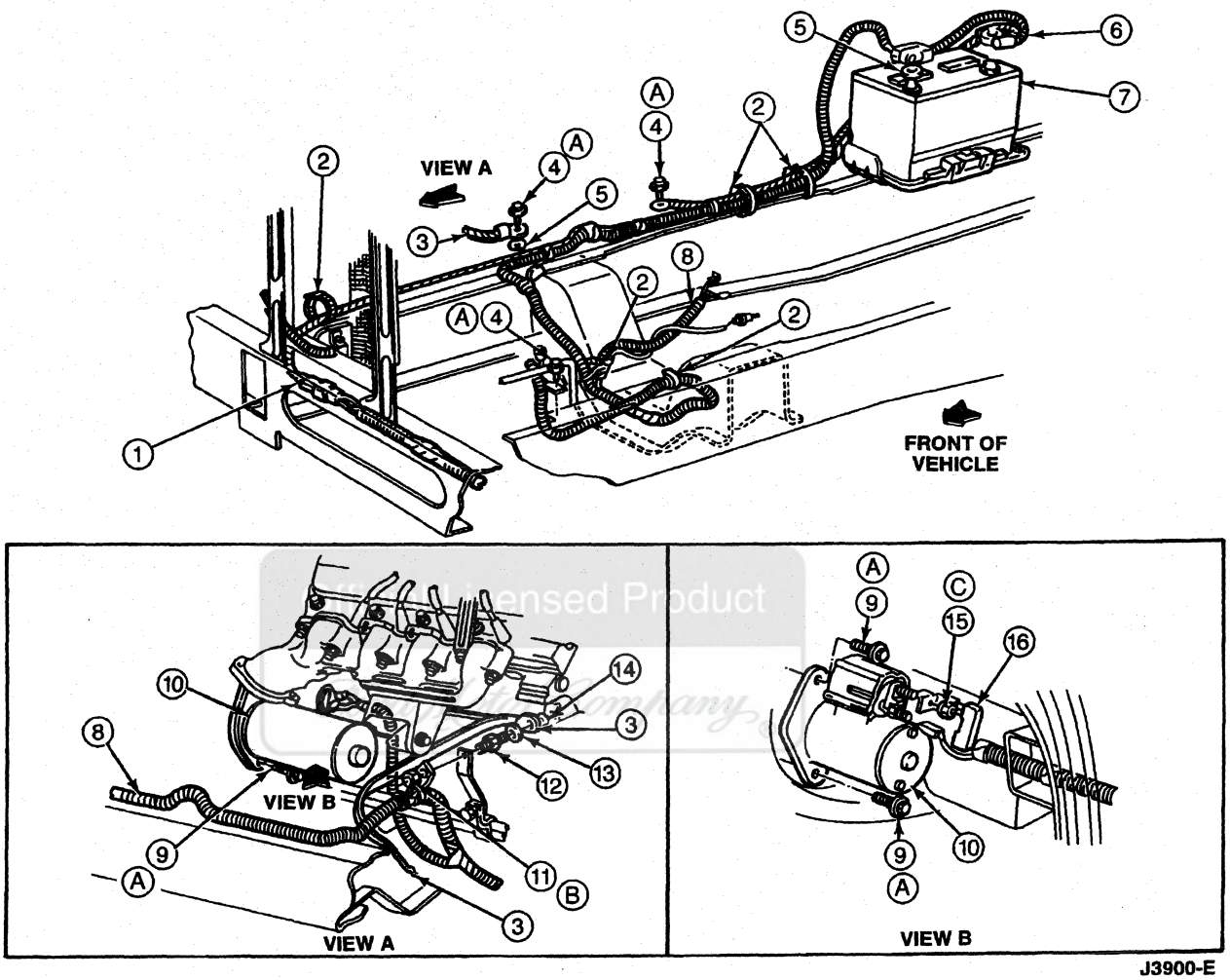

J3900-E

Item	Part Number	Description
1	—	Wire Harness (Part of 14305)
2	95875-S	Cable Strap
3	14303	Dash Panel Ground Cable
4	W611635-S36M	Self Tapping Screw (M8 x 1.25 x 20)
5	374043-S100	Felt Washer (5/8 x 1.31 x 0.02 Inch)
6	14301	Battery Ground Cable
7	10655	Battery
8	14300	Battery to Starter Relay Cable
9	382747-S36	Bolt (M10 x 1.5)
10	11002	Starter Motor

(Continued)

Item	Part Number	Description
11	33799-S36	Nut (3/8-16)
12	391695-S36	Stud (3/8-16, 7/16-14 x 1.94 Inch)
13	380079-S36	Flatwasher (7/16 x 0.94 x 0.09 Inch)
14	34943-S36	Washer (7/16 External Tooth, Locking)
15	N805403-S100	Nut
16	—	Cover (Part of 11450)
A	—	Tighten to 19-26 N·m (14-19 Lb-Ft)
B	—	Tighten to 11-16 N·m (8-12 Lb-Ft)
C	—	Tighten to 10-14 N·m (7-11 Lb-Ft)

REMOVAL AND INSTALLATION (Continued)

Battery Tray

Removal

1. Remove battery (10655) from vehicle.
2. Remove retaining bolts, screws and washers from battery tray.
3. Remove battery tray from vehicle.

Installation

1. Position battery tray to front fender apron (16054) in engine compartment.
2. Install retaining bolts, screws and washers. Tighten each to 8-12 N·m (6-8 lb-ft).
3. Install battery.
4. Tighten battery hold-down clamp bolt to 7-10 N·m (62-89 lb-in).

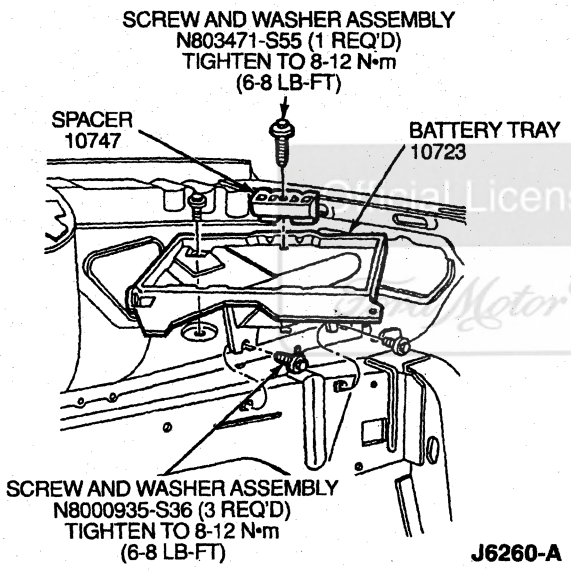

Battery Charging

WARNING: WEAR SAFETY GLASSES. BATTERY CHARGING CAN BE DANGEROUS. WHILE BEING CHARGED, THE BATTERY PRODUCES A POTENTIALLY EXPLOSIVE MIXTURE OF HYDROGEN AND OXYGEN GASSES. KEEP SPARKS, FLAMES AND LIGHTED CIGARETTES AWAY FROM BATTERIES. IN CASE OF ACID CONTACT WITH SKIN, EYES OR CLOTHING, FLUSH IMMEDIATELY WITH LARGE AMOUNTS OF WATER. GET MEDICAL ATTENTION.

NOTE: If excessive gassing or electrolyte spewing occurs during the charge, discontinue charging. The battery (10655) has reached serviceable charge. If the battery will not accept at least 5 A after 20 minutes of charging, replace the battery.

Before recharging a discharged battery, inspect and service the following conditions if they exist:

1. Loose drive belt (8620).
2. Pinched or grounded generator voltage regulator wiring (14305).
3. Loose connections of generator voltage regulator wiring at the generator (GEN)(10346) or voltage regulator (VR)(10316).
4. Loose or corroded connections at battery, grounded starter motor cutout relay (11433) or engine (6007).
5. Excessive battery drain due to:
   a. Engine compartment lamp, luggage compartment lamp, glove compartment and interior lamps remaining energized (damaged or misadjusted switch, glove compartment left open, etc).
   b. Lamp switch (13713) continuously on.

SPECIFICATIONS

TORQUE SPECIFICATIONS

Description	N·m	Lb-Ft	Lb-In
Battery Cable Bolt and Nut	13-17	10-13	—
Body Ground Cable Screw	3-4	—	27-35
Battery to Starter Relay Cable Nut	10-14	7-10	—
Battery Tray Retaining Screws and Washers	8-12	6-8	—
Battery Hold-Down Clamp Screw and Washer	8-12	6-8	—
Starter Motor Retaining Screw and Washer	19-26	14-19	—

SECTION 14-02A Generator, Integral Rear Mounted Regulator, Internal Fan Type, 95 Ampere and 130 Ampere

SUBJECT	PAGE
VEHICLE APPLICATION	14-02A-1
DESCRIPTION AND OPERATION	
Charging System	14-02A-1
Generator	14-02A-1
Generator Circuit	14-02A-2
A Circuit	14-02A-2
Battery Positive Voltage (B+) Output	14-02A-2
I Circuit	14-02A-2
S Circuit	14-02A-2
DIAGNOSIS AND TESTING	
Generator and Regulator	14-02A-2
REMOVAL AND INSTALLATION	
Generator, 5.8L and 7.3L Engines	14-02A-3
Generator, 7.5L Engine	14-02A-2
Voltage Regulator	14-02A-4
DISASSEMBLY AND ASSEMBLY	
Brush and Terminal Holder Replacement	14-02A-5
Generator	14-02A-5
Voltage Regulator	14-02A-5
ADJUSTMENTS	
Generator Drive Belt	14-02A-5
SPECIFICATIONS	14-02A-5

VEHICLE APPLICATION

F-Series

Official Licensed Product
Ford Motor Company

DESCRIPTION AND OPERATION

Charging System

The electrical system is a negative ground system consisting of:

- integral generator (GEN)(10346)
- voltage regulator (VR)(10316)
- charge indicator
- storage battery (10655)
- necessary wiring and cables

Refer to Electrical and Vacuum Troubleshooting Manual for schematics and locations of components and wiring.

With the ignition switch lock cylinder (11582) in the RUN position, the following conditions occur:

- Voltage is applied through the charge indicator I circuit to the voltage regulator.
- Voltage turns on the voltage regulator allowing current to flow from the sense A circuit to the generator field coil.

Generator

When the engine is started, the following sequence of events occurs:

- Generator (GEN)(10346) begins to generate alternating current (AC).
- Alternating current (AC) is converted to direct current (DC) by the rectifier (10304).
- Current is supplied through the vehicle's system through the output stud located on the rear of the generator.
- Generator output current is determined by the voltage at the A circuit (battery sense voltage).
- The circuit voltage is compared to a set voltage internal to the voltage regulator (VR)(10316).
- Voltage regulator controls the generator field current to maintain proper generator output.
- Set voltage will vary with temperature.
- Set voltage is typically higher in the winter.
- Set voltage is typically lower in the summer.
- Varying set voltage allows for better battery recharge in the winter.
- Varying set voltage reduces the chance of overcharging the battery (10655) in the summer.

DESCRIPTION AND OPERATION (Continued)

7.5L Engine

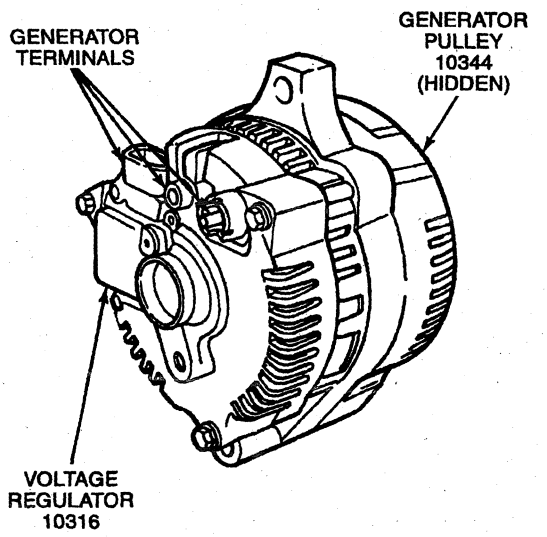

DJ0123-A

5.8L and 7.3L Engines

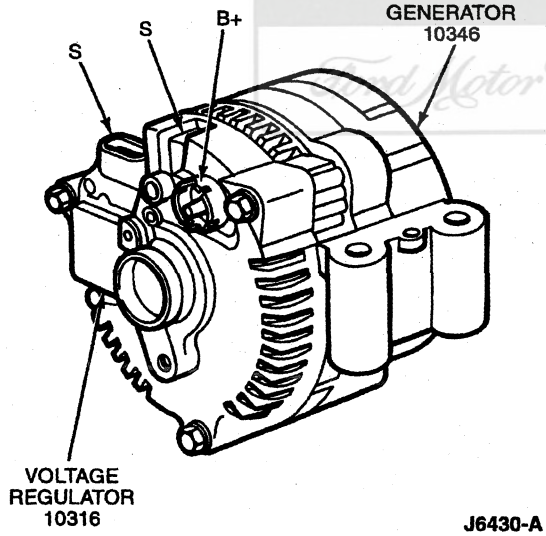

J6430-A

Generator Circuit

Battery Positive Voltage (B+) Output

The generator output is supplied through battery positive voltage (B+) output connection to the battery (10655) and electrical system.

I Circuit

The I circuit, or ignition switch circuit is used to turn on the following:

- voltage regulator (VR)(10316)
- ignition switch (11572), which is powered up with the ignition switch lock cylinder (11582) in the RUN position
- the indicator circuit if there is a fault in the charging system operation or associated wiring circuits

A Circuit

The A circuit, or battery sense circuit is used to sense battery voltage. Voltage is used by the voltage regulator to determine generator output. This circuit is also used to supply power to the generator field coil, is connected back to the load distribution point and is a protected circuit.

S Circuit

The S circuit, or stator circuit, is used to feed back a voltage signal from the generator (GEN)(10346) to the voltage regulator. This voltage, typically one-half battery voltage, is used by the voltage regulator to turn off the indicator.

Official Licensed Product
Ford Motor Company

DIAGNOSIS AND TESTING

Generator and Regulator

Refer to Section 14-00.

REMOVAL AND INSTALLATION

Generator, 7.5L Engine

WARNING: HYDROGEN AND OXYGEN GASES ARE PRODUCED DURING NORMAL BATTERY OPERATION. THIS GAS MIXTURE CAN EXPLODE IF FLAMES, SPARKS OR LIGHTED SUBSTANCES ARE BROUGHT NEAR THE BATTERY (10655). WHEN CHARGING OR USING A BATTERY IN AN ENCLOSED SPACE, ALWAYS PROVIDE VENTILATION AND SHIELD YOUR EYES.

WARNING: KEEP BATTERIES OUT OF REACH OF CHILDREN. BATTERIES CONTAIN SULFURIC ACID. AVOID CONTACT WITH SKIN, EYES OR CLOTHING. ALSO, SHIELD YOUR EYES WHEN WORKING NEAR THE BATTERY TO PROTECT AGAINST POSSIBLE SPLASHING OF THE ACID SOLUTION. IN CASE OF ACID CONTACT WITH THE SKIN, EYES OR CLOTHING, FLUSH IMMEDIATELY WITH WATER FOR A MINIMUM OF FIFTEEN MINUTES. IF ACID IS SWALLOWED, DRINK LARGE QUANTITIES OF MILK OR WATER, FOLLOWED BY MILK OF MAGNESIA, A BEATEN EGG, OR VEGETABLE OIL. CALL A PHYSICIAN IMMEDIATELY.

Removal

1. Disconnect battery ground cable (14301).

REMOVAL AND INSTALLATION (Continued)

2. Disconnect the wire harness attachments to the integral generator (GEN)(10346). Pull the two connectors straight out.

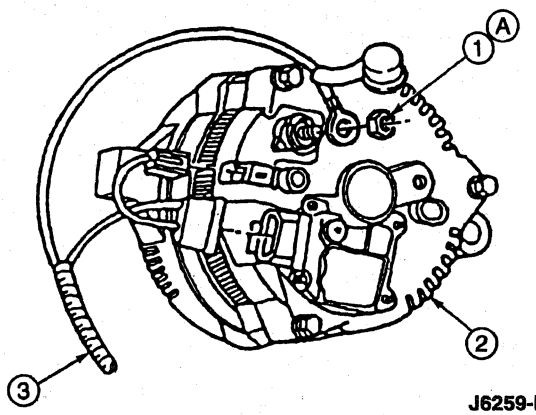

J6259-B

Item	Part Number	Description
1	N805320S	Nut
2	10346	Generator

(Continued)

Item	Part Number	Description
3	14305	Generator Voltage Regulator Wiring
A	—	Tighten to 9-12 N·m (80-106 Lb-In)

3. Disengage the accessory drive belt (8620) from the generator pulley (10344).
4. Remove the generator mounting bolts and remove generator.

Installation

1. Position the integral generator on the engine.
2. Install the generator mounting bolts. Tighten upper mounting bolts to 21-29 N·m (15-21 lb-ft).
3. Install the accessory drive belt over the generator pulley.
4. Connect the engine control sensor wiring (12A581) to the generator. Tighten output terminal nut to 9-12 N·m (80-106 lb-in).
5. Connect battery ground cable.

Official Licensed Product
Ford Motor Company

Generator, 5.8L and 7.3L Engines

Removal

1. Disconnect battery ground cable (14301).
2. Disconnect electrical connectors from generator (GEN)(10346).
3. Remove drive belt (8620).
4. Remove generator retaining bolts (3).
5. Remove generator.

Generator

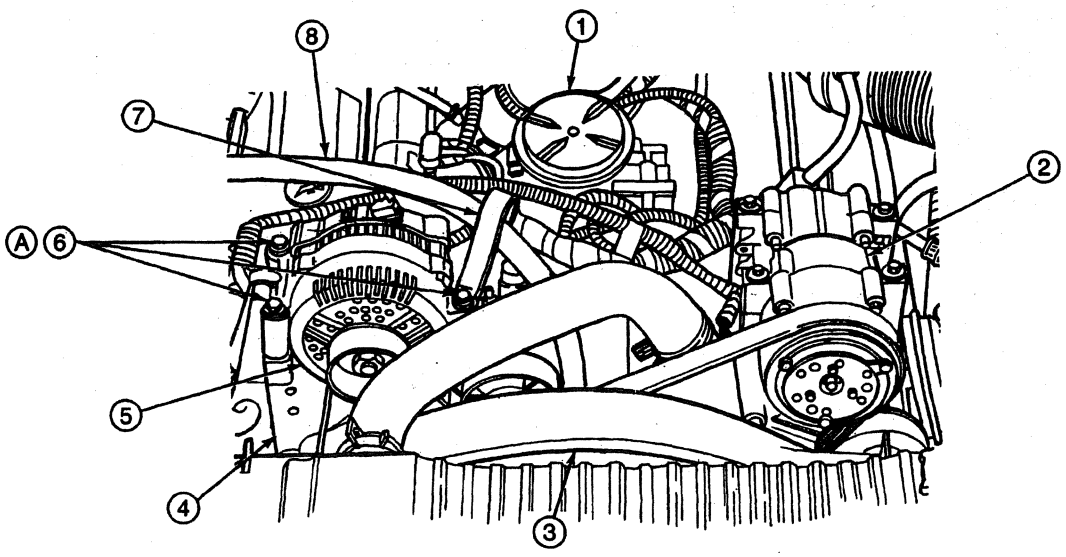

J6040-A

REMOVAL AND INSTALLATION (Continued)

Item	Part Number	Description
1	—	Fuel Filter Assy (Part of 9K601)
2	19703	A/C Compressor
3	8146	Fan Shroud
4	10A313	Generator Bracket
5	10346	Generator
6	389706-S2	Generator Retaining Bolts (3)
7	—	Heater Hose Clip
8	—	Heater Hose
A	—	Tighten to 21-29 N·m (15-21 Lb-Ft)

(Continued)

Installation

1. Install generator.
2. Install generator retaining bolts (3). Tighten bolts to 21-29 N·m (15-21 lb-ft).
3. Install drive belt.
4. Connect electrical connectors to generator.
5. NOTE: When the battery (10655) has been disconnected and reconnected, some abnormal drive symptoms may occur while the powertrain control module (PCM)(12A650) relearns its adaptive strategy. The vehicle may need to be driven 16 km (10 miles) or more to relearn the strategy.

   Connect battery ground cable.

Voltage Regulator

Removal

1. Remove the four screws (T20 Torx® head) retaining the voltage regulator (VR)(10316) to the generator rear housing and bearing (10334). Remove the voltage regulator, with generator brush and terminal holder (10320) attached, from the generator (GEN)(10300).

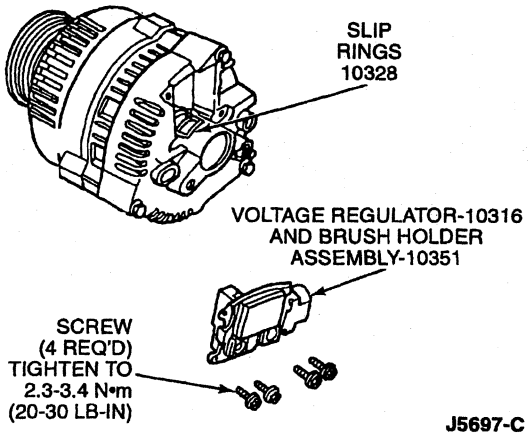

J5697-C

2. Hold the voltage regulator in one hand and pry off the cap covering the A screw head with a screwdriver.
3. Remove two screws (T20 Torx® head) retaining the voltage regulator to the generator brush and terminal holder. Separate the voltage regulator from generator brush and terminal holder.

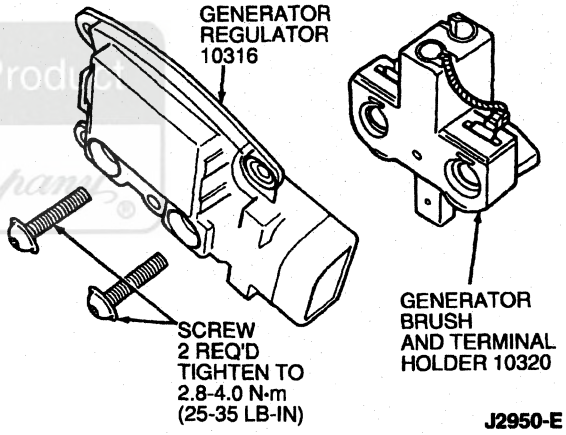

J2950-E

Installation

1. Replace generator brush and terminal holder to voltage regulator and install retaining screws.
2. Replace cap on the head of the A terminal screw.
3. Press the generator brush into the generator brush and terminal holder. Hold the generator brush in position by inserting a standard size paper clip (or equivalent) through both the location hole in the voltage regulator and through the holes in the generator brush and terminal holders.
4. Install the voltage regulator and generator brush and terminal holder to the generator (GEN)(10346) with retaining screws.
5. Remove paper clip (or equivalent) from the voltage regulator.

Licensed Product
Ford Motor Company

DISASSEMBLY AND ASSEMBLY

Generator

The 95-amp and 130-amp generators are nonserviceable and are replaced as an assembly.

Brush and Terminal Holder Replacement

Refer to Voltage Regulator in the Removal and Installation portion of this section.

Voltage Regulator

Refer to Voltage Regulator in the Removal and Installation portion of this section.

ADJUSTMENTS

Generator Drive Belt

Refer to Section 03-05 in the Powertrain, Drivetrain Manual.

SPECIFICATIONS

GENERATOR SPECIFICATIONS

Item	Specifications
Generator (10346)	Manufactured by Ford
Rating (Idle/Max. rpm)	130 Amp
Regulator (10316)	Integral with Generator

GENERATOR BRUSH SPECIFICATIONS

Slip Ring Turning				Brush Length			
Min. Diameter		Max. Runout		New		Wear Limit	
mm	In.	mm	In.	mm	In.	mm	In.
26.4	1.04	.013	0.0005	18.00	.709	3.00	.17

TORQUE SPECIFICATIONS

Description	N·m	Lb-Ft	Lb-In
Generator Bolt, Upper	21-29	15-21	—
Output Terminator Nut	9-12	—	80-106

Official Licensed Product
Ford Motor Company

SECTION 14-02B Generator and Regulator, External Fan Type, 215 Ampere

SUBJECT	PAGE
VEHICLE APPLICATION	14-02B-1
DESCRIPTION AND OPERATION	
Charging System	14-02B-1
Voltage Regulator	14-02B-1
DIAGNOSIS AND TESTING	
Generator and Regulator	14-02B-1
REMOVAL AND INSTALLATION	
Generator	14-02B-2
Voltage Regulator	14-02B-2
DISASSEMBLY AND ASSEMBLY	
Generator	14-02B-3
CLEANING AND INSPECTION	
Generator	14-02B-5
ADJUSTMENTS	
Generator Drive Belt	14-02B-5
SPECIFICATIONS	14-02B-5

VEHICLE APPLICATION

F-Super Duty Equipped with 7.3L Diesel Engine

DESCRIPTION AND OPERATION

Charging System

The Mitsubishi 215-ampere generator (GEN)(10300) is an internally regulated, brushless unit that is self-current limiting and temperature compensating.

Official Licensed Product Ford Motor Company

Voltage Regulator

The regulator is integral with the generator and the fan is external.

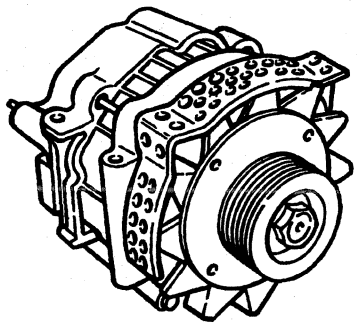

J6305-A

DIAGNOSIS AND TESTING

Generator and Regulator

Refer to Section 14-00.

REMOVAL AND INSTALLATION

Generator

WARNING: HYDROGEN AND OXYGEN GASES ARE PRODUCED DURING NORMAL BATTERY OPERATION. THIS GAS MIXTURE CAN EXPLODE IF FLAMES, SPARKS OR LIGHTED SUBSTANCES ARE BROUGHT NEAR THE BATTERY. WHEN CHARGING OR USING A BATTERY IN AN ENCLOSED SPACE, ALWAYS PROVIDE VENTILATION AND SHIELD YOUR EYES.

WARNING: KEEP OUT OF REACH OF CHILDREN. BATTERIES CONTAIN SULFURIC ACID. AVOID CONTACT WITH SKIN, EYES OR CLOTHING. ALSO, SHIELD YOUR EYES WHEN WORKING NEAR THE BATTERY TO PROTECT AGAINST POSSIBLE SPLASHING OF THE ACID SOLUTION. IN CASE OF ACID CONTACT WITH SKIN, EYES OR CLOTHING, FLUSH IMMEDIATELY WITH WATER FOR A MINIMUM OF FIFTEEN MINUTES. IF ACID IS SWALLOWED, DRINK LARGE QUANTITIES OF MILK OR WATER, FOLLOWED BY MILK OF MAGNESIA, A BEATEN EGG, OR VEGETABLE OIL. CALL A PHYSICIAN IMMEDIATELY.

Removal

1. **CAUTION: Remove battery ground cables (14301) before attempting removal of generator from vehicle.**

   Remove both battery ground cables.
2. Disconnect generator ground cable.
3. Disconnect generator positive cable.
4. Disconnect internal regulator connector.
5. Remove drive belt (8620) from generator (GEN)(10300). Refer to Section 03-05 in the Powertrain, Drivetrain Manual.
6. Remove generator retaining bolts.

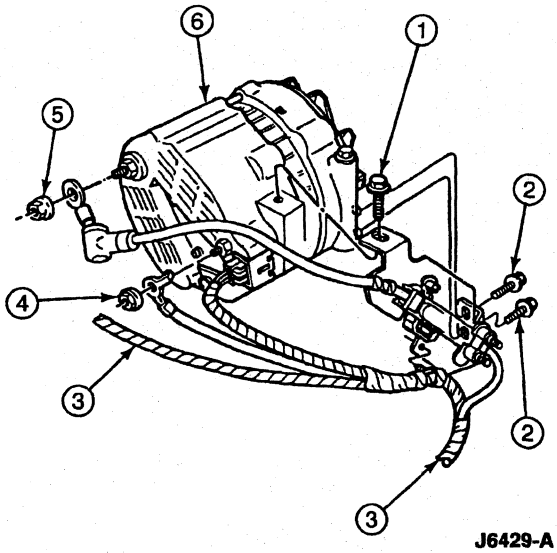

J6429-A

Item	Part Number	Description
1	N606572-S307	Bolt
2	N605918-S55	Bolt
3	14305	Wiring Harness
4	N805403-S301	Nut and Washer Assy
5	N807910-S301	Nut and Washer Assy
6	10300	Generator

Installation

1. Install generator to FEAD bracket.
2. Install megafuse bracket.
3. Install three hold-down bolts and tighten to 40-55 N·m (30-41 lb-ft).
4. Install positive generator cable and tighten to 18-26 N·m (13-19 lb-ft).
5. Install generator ground cable and tighten to 11-16 N·m (8-12 lb-ft).
6. Reconnect regulator connector.
7. Install drive belt. Refer to Section 03-05 in the Powertrain, Drivetrain Manual.
8. NOTE: When the battery (10655) has been disconnected and reconnected, some abnormal drive symptoms may occur while the powertrain control module (PCM)(12A650) relearns its adaptive strategy. The vehicle may need to be driven 16 km (10 miles) or more to relearn the strategy.

   Reconnect battery ground cables.

Voltage Regulator

Voltage regulator is not removable.

DISASSEMBLY AND ASSEMBLY

Generator

NOTE: It may not be necessary to perform all of the following disassembly steps for a particular test or service procedure. Perform only those steps that apply.

Generator, Disassembled View

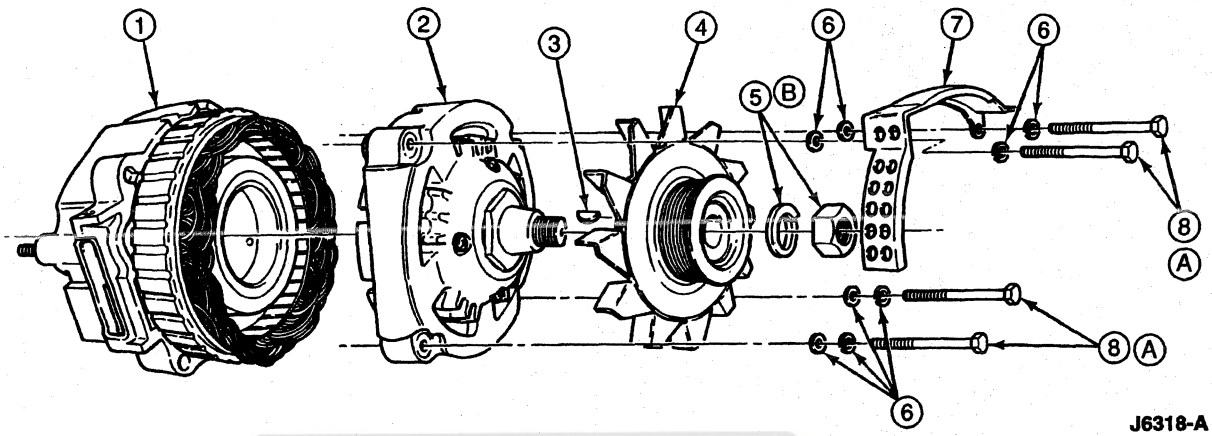

Item	Part Number	Description
1	10334	Generator Rear Housing and Bearing
2	10367	Front Generator Housing
3	—	Woodruff Key (Part of 10B352)
4	—	Fan (Part of 10300)
5	—	Nut and Locking Washer (Part of 10300)

Item	Part Number	Description
6	—	Washer (Part of 10300)
7	10A345	Shield
8	10A396	Screw Set
A	—	Tighten to 13-16 N·m (10-12 Lb-Ft)
B	—	Tighten to 132-162 N·m (97-119 Lb-Ft)

(Continued)

Official Licensed Product Ford Motor Company

Disassembly

1. Remove four generator through-bolts and fan shield.
2. Separate the front housing using two screwdrivers, one on each side. Carefully insert the tips of the screwdrivers into the slots of the front housing (A in the following illustration) and separate the generator front housing from the rear housing assembly. Remove the generator front housing from the rear housing and stator assembly.

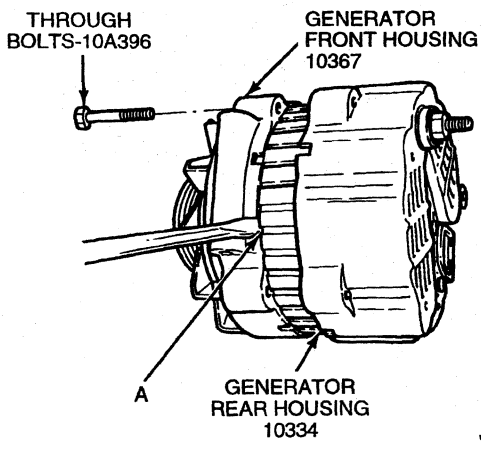

DISASSEMBLY AND ASSEMBLY (Continued)

3. **CAUTION: Do not secure generator in a vise on the rotor tangs (B in the illustration), or damage to the rotor can occur. Secure the generator at the base of the rotor (A in the illustration).**

   Remove the pulley fastening nut and locking washer.

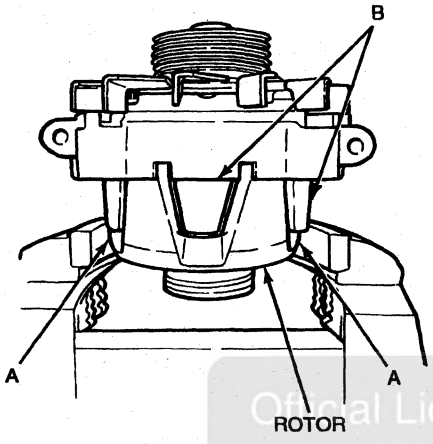

J6314-A

4. Generator pulley is not pressed on. If pulley does not come off easily, tap lightly on the nose of the rotor shaft with a nylon hammer.

   Remove generator pulley from rotor shaft.

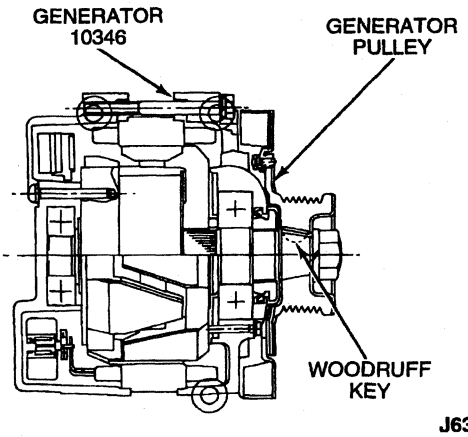

J6308-B

5. Remove the Woodruff key from the rotor shaft, if necessary.

Assembly

1. Install Woodruff key to rotor shaft, if removed.
2. Install generator fan and blade assembly.
3. Install lockwasher and nut. Tighten nut to 132-162 N·m (97-119 lb-ft).

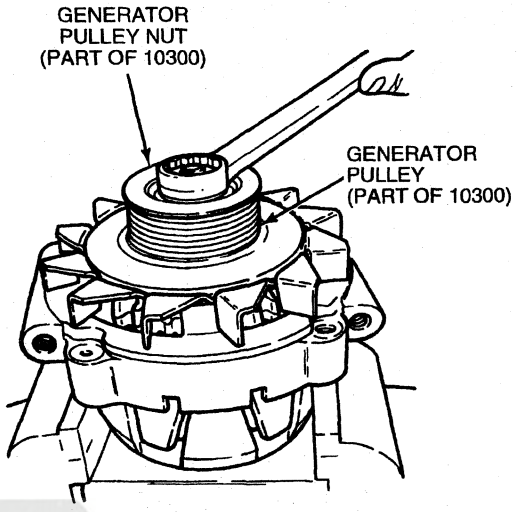

J6316-B

4. NOTE: Generator rear bearing is retained with a press fit. Rear generator housing must be heated to 50-60°C (122-140°F) where the bearing is located, for a maximum of 3 to 4 minutes. Use a heat gun or 200-watt soldering iron.

   Install front generator assembly to rear generator assembly.

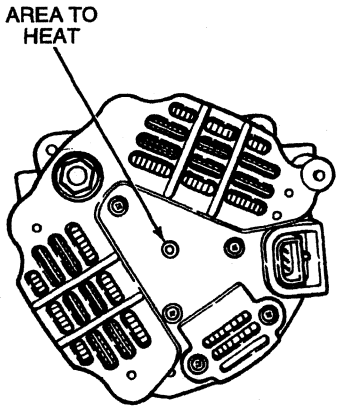

J6315-A

5. Install fan shield and generator through-bolts. Tighten through-bolts to 13-16 N·m (10-12 lb-ft).

Official Licensed Product
Ford Motor Company

CLEANING AND INSPECTION

Generator

NOTE: For abnormal noise and excessive end play, it is more effective to inspect components with the generator assembled. The generator bearings are part of the front generator assembly. Do not try to replace them separately.

NOTE: Do not apply grease or lubricant. Generator comes prelubricated. Wipe off all grease completely. Use compressed air and blow any loose debris from generator components.

1. **CAUTION: Do not clean generator parts with solvent.**

   Clean the generator front bearing with a clean cloth.
2. Rotate the generator front bearing on the drive end of the rotor shaft.
3. Check for any scraping noise, looseness or roughness. Inspect for excessive lubricant leakage. If any of these conditions exist, replace damaged components.
4. Inspect generator pulley and fan assembly.
5. Check for excessive looseness on the rotor shaft. Inspect for cracks, bent or damaged fins, or damaged pulley. Replace generator pulley and fan assembly if any of the above conditions exist.
6. Inspect front and rear generator housings.
7. Check for cracks or damage, especially in the areas of assembly ears and mounting posts. Replace any components that show damage.

ADJUSTMENTS

Generator Drive Belt

Refer to Section 03-05 in the Powertrain, Drivetrain Manual.

SPECIFICATIONS

GENERATOR SPECIFICATIONS

Description	Specification
Voltage Range	14.4 V ± 0.3 V@ 20°C
Temperature Compensation	10 ± 3 mV / °C

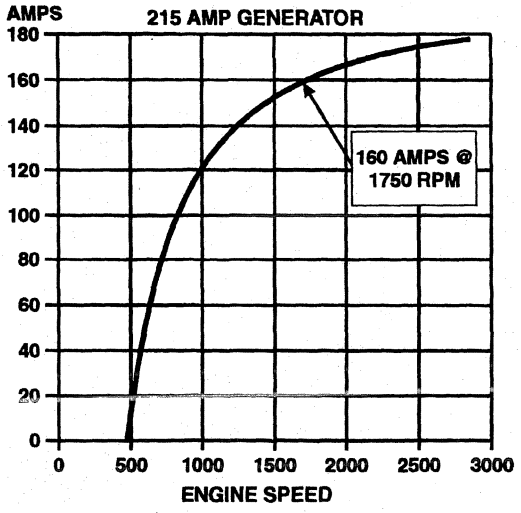

J6309-A

TORQUE SPECIFICATIONS

Description	N·m	Lb-Ft
Generator Hold-Down Bolts	40-55	30-41
Generator Positive Cable Nut	18-26	13-19
Generator Ground Cable Nut	11-16	8-12
Generator Front to Rear Housing Through-Bolts	13-16	10-12
Generator Fan Nut and Locking Washer	132-162	97-119

GROUP

AUDIO 15

SECTION TITLE	PAGE
ANTENNA	15-02-1
AUDIO SYSTEMS, SERVICE	15-00-1
RADIO, TAPE CHASSIS AND DIGITAL AUDIO COMPACT DISC PLAYER	15-01-1
SPEAKERS	15-03-1

SECTION 15-00 Audio Systems, Service

SUBJECT	PAGE
VEHICLE APPLICATION	15-00-1
DESCRIPTION AND OPERATION	
Radio Reception	15-00-1
Antenna Position	15-00-1
Antennas and Mobility	15-00-2
FM Flutter	15-00-2
FM Multi-Path Cancellation	15-00-2
FM Strong Signal Capture and AM Overloading	15-00-2
Ignition Noise	15-00-3
Interfering Noises	15-00-3
Missing or Damaged Noise Suppression Components	15-00-3
Missing or Poor Grounds	15-00-3
Radio Tests	15-00-2
Receiving FM Stereo	15-00-2
Sound Distortion, Premium Sound	15-00-3
DESCRIPTION AND OPERATION (Cont'd.)	
Stereo Indicator Inoperative or Flickering (AM and FM Reception Are OK)	15-00-2
Tone Control	15-00-2
Tuning	15-00-2
DIAGNOSIS AND TESTING	
Audio Systems	15-00-3
Component Tests	15-00-24
Radio Antenna	15-00-24
Inspection and Verification	15-00-3
Pinpoint Tests	15-00-5
Symptom Charts	15-00-4
Electrical Schematic Reference(s)	15-00-3
CLEANING AND INSPECTION	
Cassette Tape Player Head	15-00-25
SPECIAL SERVICE TOOLS/EQUIPMENT	15-00-26

Ford Motor Company Official Licensed Product

VEHICLE APPLICATION

F-250 Heavy Duty, F-350 and F-Super Duty

DESCRIPTION AND OPERATION

Radio Reception

Antenna Position

The antenna is fixed and not adjustable.

The AM and FM stereo antenna has a range of about 32 km (20 miles) before interference noises are heard. This means that in areas with tall buildings or hills, it is necessary to select the strongest possible station. The electronic radio chassis (18806) automatically tunes to the center of any given station, eliminating the need for manual fine tuning.

DESCRIPTION AND OPERATION (Continued)

Antennas and Mobility

Although a vehicle radio will give outstanding mobile reception, it cannot provide the continuous reception of home audio components. The home receiver is not limited by the vehicle operating characteristics and certain geographical effects as is the mobile unit. For example, for the best FM reception, the vehicle antenna should be designed similar to a TV antenna and pointed in the direction of the station. The best AM antenna is a long piece of wire; the higher the wire the better the reception. However, because of design necessity, the vehicle antenna is restricted in size, height and direction and must receive both AM and FM stations. This means that a limited amount of the station's signal reaches the vehicle radio.

Tuning

The electronic radio automatically tunes to the center of station frequency.

FM multiplex has a range of about 32 km (20 miles) before reception noises are heard. This means that in areas with tall buildings or hills it is necessary to select the strongest possible station.

Experience will dictate which FM stations offer the best reception.

Tone Control

Turn the single tone control on AM radios clockwise to decrease bass (low frequencies) and turn counterclockwise to decrease the treble (high frequencies).

Refer to Audio System Operating Guide for AM/FM radio tone control adjustment procedure.

FM Flutter

Flutter can best be described as repeated pops and hissing bursts heard in the radio speaker (18808) during an otherwise good broadcast. Usually this condition exists while traveling in the fringe area of the station. Flutter will become more severe beyond approximately 40 km (25 miles) of the station. The signal loss becomes greater away from the station, until finally noise takes over and reception becomes impossible. Flutter can also be noticed near the station because of the line-of-sight characteristics of FM radio waves. This can happen when a building or large structure is between the radio chassis and the station being received. Some of the FM signal bends around the building, but certain spots have almost no signal. Some signal losses are only a few inches wide and if the vehicle is parked in one of the dead spots, you will only hear noise from the radio speaker. After moving out of the shadow of the structure, the station will return to normal. Flutter will not occur on AM because the AM radio waves are much longer than FM waves.

FM Multi-Path Cancellation

Another effect caused by the line-of-sight characteristic is called cancellation. This condition exists when the radio waves are reflected from objects or structures. The noise produced by cancellation is similar to flutter, with the addition of distortion in the program. A more familiar description of cancellation is its similarity to the multiple ghosts and picture jumping that occurs on television when a low flying plane passes. The same condition exists in the vehicle, except that the vehicle is moving and the reflecting structure is stationary. The reflected signal cancels the normal signal, causing the antenna to pick up noise and distortion. Cancellation effects are most prominent in metropolitan areas, but can also become quite severe in hilly terrain and low-lying roadways.

FM Strong Signal Capture and AM Overloading

FM capture is an unusual condition that occurs when traveling in the vicinity of a broadcast tower. If listening to a weak FM station when passing the broadcast tower, a stronger station can interfere. When passing the tower, the station might switch back and forth a few times before returning to the station originally tuned. When several broadcast towers are present (common in metropolitan areas) several stations can overload the receiver resulting in considerable station changing, mixing and distortion. Fortunately, this condition is localized and it will not harm the receiver. Some overloading can also be noticed on AM, but usually to a lesser degree.

Receiving FM Stereo

Because more data is carried in the FM stereo waves than in the monaural FM broadcasts, flutter, cancellation and capture are even more noticeable. The FM stereo noise-free broadcast range is approximately 8 km (5 miles) less than that received with the monaural FM radio. The AM/FM, FM stereo radio might never encounter any of these troublesome conditions, as they are more prominent in metropolitan areas, hilly terrain and low-lying roadways. However, when diagnosing FM stereo, it is recommended to accurately tune to the strongest FM stereo station.

Stereo Indicator Inoperative or Flickering (AM and FM Reception Are OK)

Verify that customer is listening to stereo stations.

A weak or distant signal may cause the stereo indicator to flicker. Tune radio to a nearby FM stereo station. If reception is good, but stereo indicator is still intermittent, remove radio chassis for service.

Radio Tests

Internal diagnostic examination of the radio chassis should be left to the authorized radio service center. However, the automotive technician should be able to analyze and isolate radio chassis reception conditions to the proper area or component causing the condition. All radio chassis conditions can be isolated to one of five general areas:

- antenna system
- radio chassis

Official Licensed Ford Motor Company

DESCRIPTION AND OPERATION (Continued)

- radio speaker system
- radio noise suppression equipment
- radio amplifier

Interfering Noises

The vehicle ignition system is a source of radio interference. This high-voltage switching system produces a radio frequency electromagnetic field that radiates at AM, FM and CB frequencies. Although components have been designed into the vehicle to minimize this concern, the noise is more noticeable if the radio is tuned slightly off channel for FM programs. Vehicle electrical accessories and owner add-on accessories can also contribute to radio interference. Furthermore, there are many noise sources that are external to the vehicle. These include power lines, communication systems, ignition systems of other vehicles, neon signs, etc.

Favoring the rear radio speaker in noisy areas will help to reduce noise.

Ignition Noise

The most effective method of evaluating ignition noise is to compare the radio performance with the engine on, versus engine off. If ignition noise is present with engine running:

- Check to see that the spark plug wires are the suppressor type and that the spark plugs are the correct resistor type.
- Check to see that the carbon center insert in distributor cap (12106) is secure, if so equipped.

NOTE: Silicone grease must not be removed from vehicles equipped with electronic engine controls (EEC-IV).

- Check distributor cap and rotor electrodes (if so equipped) for silicone grease, as this can cause ignition noise on FM. This noise is characterized by a "motor boat" type sound on weak to moderate strength stations. The noise can only be eliminated by replacing the distributor cap and distributor rotor (12200) with a cap and rotor that do not have grease.

Missing or Poor Grounds

Check bond strap grounding effectiveness by wedging a large file between metal parts to ensure proper ground, such as between the tail pipe and body, or between the fender and frame, while the radio chassis is playing and the engine is running. Listen for a decrease in the objectionable radio noise. If a reduction in radio noise is noted, first try tightening body and exhaust system clamps and brackets. Then, if necessary, install a new bond strap between the two metal parts to ensure proper ground.

Missing or Damaged Noise Suppression Components

Noise suppression components might be malfunctioning or missing. Service or replace any missing or damaged components.

Sound Distortion, Premium Sound

Sound distortion can be attributed to any of three components: the radio amplifier (18B849), the radio chassis, or the radio amplifier wiring (19B113) that connects the radio amplifier to the radio chassis. If any of these components is damaged, sound quality will be distorted. The speakers will also cause distortion if any of them are grounded (CDR only). Refer to the symptom chart in this section for diagnosis and testing procedures.

DIAGNOSIS AND TESTING

Electrical Schematic Reference(s)

Refer to Electrical and Vacuum Troubleshooting Manual, Cell 130, Radio for schematic and connector information.

Audio Systems

Inspection and Verification

Internal diagnostic examination of the radio should be left to the authorized radio service center. However, the automotive technician should be able to analyze and isolate radio reception conditions to the proper area or component causing the condition. All radio conditions can be isolated to one of the following five general areas:

- antenna system
- radio chassis (18806)
- radio speaker system
- radio noise suppression equipment
- premium sound system

The diagnosis charts and tests should be used with the Electrical and Vacuum Troubleshooting Manual and an appropriate radio tester to accurately diagnose and quickly service most radio system concerns.

1. Verify the vehicle owner's original concern by operating the electronic audio system to duplicate the condition.
2. Inspect to determine if one of the following mechanical or electrical concerns apply.

Official Licensed Product Ford Motor Company

DIAGNOSIS AND TESTING (Continued)

VISUAL INSPECTION CHART

Mechanical	Electrical
• Radio chassis with or without tape player physically damaged, misaligned, any controls inoperative • Antenna and two-piece radio antenna lead in cable physically damaged, misaligned connections • Radio speakers mounting / speaker cones physically damaged, misaligned • Radio ignition interference capacitor, radio frequency interference suppression bond and radio receiver hood bonding strap misaligned, cleanliness and metal-to-metal contact	• Open fuses • Open connectors • Corroded connectors • Ignition switch

3. If the concern(s) remains after the inspection, determine the symptom(s) and proceed to the following symptom chart.

Symptom Charts

Refer to the Electrical and Vacuum Troubleshooting Manual for the connector numbers in the pinpoint tests.

NOTE: Use Rotunda 73 Digital Multimeter 105-R0051 or equivalent to perform electrical pinpoint tests.

SOUND SYSTEM FUNCTION

Condition	Possible Source	Action
• Radio Chassis Inoperative / Does Not Operate Properly	• Open fuse. • Circuitry. • Ignition switch. • Radio chassis.	• GO to Pinpoint Test A.
• Radio Chassis Display Blank — Radio Chassis Operates	• Open fuse. • Circuitry. • Ignition switch. • Radio chassis.	• GO to Pinpoint Test B.
• Radio Chassis / Tape Player Inoperative / Does Not Operate Properly	• Open fuse. • Circuitry. • Ignition switch. • Radio chassis. • Tape player.	• GO to Pinpoint Test C.
• Radio Chassis / Tape Player Display Blank — Radio Chassis / Tape Player Operates	• Open fuse. • Circuitry. • Ignition switch. • Radio chassis. • Tape player.	• GO to Pinpoint Test D.
• Compact Disc Radio Inoperative / Does Not Operate Properly	• Open fuse. • Circuitry. • Ignition switch. • Radio chassis. • Digital audio compact disc radio.	• GO to Pinpoint Test E.
• Compact Disc Radio Display Blank / Radio Chassis / Digital Audio Compact Disc Player Operates	• Open fuse. • Circuitry. • Ignition switch. • Radio chassis. • Digital audio compact disc radio.	• GO to Pinpoint Test F.
• Tape Player Only Inoperative / Does Not Operate Properly	• Open fuse. • Circuitry. • Ignition switch. • Radio chassis. • Tape player.	• GO to Pinpoint Test G.

Official Published Product
Ford Motor Company

DIAGNOSIS AND TESTING (Continued)

SOUND SYSTEM QUALITY

Condition	Possible Source	Action
• Noisy Reception, AM and FM	• Suppression equipment. • Circuitry. • Antenna. • Radio chassis.	• GO to Pinpoint Test H.
• Noisy Reception, AM Only	• Suppression equipment. • Circuitry. • Antenna. • Radio chassis.	• GO to Pinpoint Test J.
• Noisy Reception, FM Only	• Suppression equipment. • Circuitry. • Antenna. • Radio chassis.	• GO to Pinpoint Test K.
• One or More Radio Speakers Distorted, Not All Radio Speakers	• Circuitry. • Radio speakers. • Radio chassis. • Radio amplifier.	• GO to Pinpoint Test L.
• All Radio Speakers Distorted	• Circuitry. • Radio chassis. • Radio amplifier.	• GO to Pinpoint Test M.
• No Sound from One or More Radio Speakers, Not All Radio Speakers	• Circuitry. • Radio speakers. • Radio chassis. • Radio amplifier.	• GO to Pinpoint Test N.
• No Sound from All Radio Speakers	• Circuitry. • Radio speakers. • Radio chassis. • Radio amplifier.	• GO to Pinpoint Test P.
• Poor Sound Quality from One or More Radio Speakers, Not All Speakers	• Circuitry. • Radio chassis. • Radio amplifier. • Radio speakers.	• GO to Pinpoint Test Q.
• Poor Sound Quality from All Radio Speakers	• Circuitry. • Radio chassis. • Radio amplifier. • Radio speakers.	• GO to Pinpoint Test R.

Official Licensed Product Ford Motor Company

Pinpoint Tests

Sound System Function

PINPOINT TEST A: RADIO CHASSIS INOPERATIVE/DOES NOT OPERATE PROPERLY

Test Step		Result ▶	Action to Take
A1	CHECK OPERATION OF RADIO CHASSIS		
	• Key to RUN or ACCESSORY. • Press radio POWER on. • **Is radio chassis display lit?**	Yes ▶ No ▶	GO to **A3**. GO to **A2**.
A2	CHECK QUALITY SOUND FROM RADIO SPEAKERS		
	• Verify that quality sound is coming from radio speakers. • **Is quality sound coming from radio speakers?**	Yes ▶ No ▶	GO to Pinpoint Test B. GO to **A16**.
A3	DISPLAY TEST — AM BAND INDICATOR		
	• Press AM/FM button for AM band. • Press TUNE button to station 1000 AM. • **Is display correct and is AM indicator lit?**	Yes ▶ No ▶	GO to **A4**. REMOVE radio chassis for service.

DIAGNOSIS AND TESTING (Continued)

PINPOINT TEST A: RADIO CHASSIS INOPERATIVE/DOES NOT OPERATE PROPERLY (Continued)

	Test Step	Result ▶	Action to Take
A4	DISPLAY TEST — FM1/FM2 BAND INDICATORS		
	• Press AM/FM button FM1 band. • Press TUNE button to station 88.9 FM. • Verify for FM2 band. • **Is display correct and are FM1 and FM2 indicators lighting respectively?**	Yes ▶ No ▶	GO to **A5**. REMOVE radio chassis for service.
A5	DISPLAY TEST — ST STEREO INDICATOR		
	• Press SEEK or TUNE buttons to a local FM stereo station. • **Is display correct and is ST indicator lit?**	Yes ▶ No ▶	GO to **A6**. REMOVE radio chassis for service.
A6	SEEK — HIGHER FREQUENCY STATION		
	• Press SEEK (>) and verify that number on display increases. NOTE: If display reads 1610 AM or 107.9 FM, display will not increase. The SEEK (>) button should be pressed until display reads less than 1610 AM or 107.9 FM. • **Is SEEK (>) operating properly?**	Yes ▶ No ▶	GO to **A7**. REMOVE radio chassis for service.
A7	SEEK — LOWER FREQUENCY STATION		
	• Press SEEK (<) and verify that number on display decreases. NOTE: If display reads 530 AM or 88.1 FM, display will not decrease. The SEEK (<) button should be pressed until display reads greater than 530 AM or 88.1 FM. • **Is SEEK (<) operating properly?**	Yes ▶ No ▶	GO to **A8**. REMOVE radio chassis for service.
A8	STATION RECALL MEMORY TEST		
	• Press SEEK or TUNE buttons to a desired station. • Press and hold one of the (1 through 5) memory buttons for two seconds until station sound is returned (repeat for all five buttons). • Do for AM, FM1 and FM2 bands using 15 stations. • Turn radio chassis off, then on. • Press each station recall button and verify memory storage. • **Is memory test successful?**	Yes ▶ No ▶	GO to **A9**. REMOVE radio chassis for service.
A9	VOLUME CONTROL TEST		
	• Press VOLUME (+) and (-) to verify an increase and decrease in volume sound from radio chassis. • **Does volume change properly?**	Yes ▶ No ▶	GO to **A10**. CHECK radio speakers and connections. REFER to symptom chart if diagnosis finds radio speakers inoperative. REPEAT volume test. If volume still inoperative, REMOVE radio chassis for service.
A10	TUNE CONTROL TEST (ESR)		
	• Press TUNE button (>) or (<) to change the frequency station up or down one increment at a time. Change frequencies quickly by holding the (>) or (<) side of button. Verify for all bands. • **Does TUNE operate properly?**	Yes ▶ No ▶	GO to **A11**. REMOVE radio chassis for service.
A11	TUNE ANTENNA TEST (OPTIONAL)		
	• Tune radio on AM band outside of building. • Press SEEK to observe all listenable stations on band. Count number that can be tuned. • Compare to a vehicle with known good radio chassis. • **Are normal number of stations received?**	Yes ▶ No ▶	GO to **A12**. If an absolute number of stations cannot be tuned, PERFORM radio antenna component test. REFER to Component Tests in this section. If antenna operative, REMOVE radio chassis for service.

Ford Motor Company Confidential Product

DIAGNOSIS AND TESTING (Continued)

PINPOINT TEST A: RADIO CHASSIS INOPERATIVE/DOES NOT OPERATE PROPERLY (Continued)

Test Step		Result ▶	Action to Take
A12	CLOCK — CONTROL TEST		
	• Press CLOCK button and simultaneously press SEEK (>) to advance hours or SEEK (<) to advance minutes. Release CLOCK button. • **Does CLOCK operate properly?**	Yes ▶ No ▶	GO to **A13**. REMOVE radio chassis for service.
A13	TONE CONTROL TEST		
	• BASS: Press AUDIO button repeatedly until BASS is displayed. Press VOLUME (+) to increase low frequency sounds and VOLUME (-) to decrease low frequency sounds. • TREBLE: Press AUDIO button repeatedly until TREB is displayed. Press VOLUME (+) to increase high frequency sounds and VOLUME (-) to decrease high frequency sounds. • Verify proper display and sounds for each tone control. • **Do BASS and TREBLE operate properly?**	Yes ▶ No ▶	GO to **A14**. CHECK radio speakers and connections. REFER to symptom chart if diagnosis finds radio speakers inoperative. If BASS and/or TREBLE still inoperative, REMOVE radio chassis for service.
A14	BALANCE CONTROL TEST		
	• BALANCE: Press AUDIO button repeatedly until BAL is displayed. Press VOLUME (+) to shift sound to right radio speakers and VOLUME (-) to shift sound to left radio speakers . • Verify proper display and sound in proper radio speakers. • **Does BALANCE operate properly?**	Yes ▶ No ▶	GO to **A15**. CHECK radio speakers and connections. REFER to symptom chart if diagnosis finds radio speakers inoperative. If BALANCE still inoperative, REMOVE radio chassis for service.
A15	FADER CONTROL TEST		
	• FADER: Press AUDIO button repeatedly until FADE is displayed. Press VOLUME (+) to shift sound to rear radio speakers and VOLUME (-) to shift sound to front radio speakers. • **Does FADER operate properly?**	Yes ▶ No ▶	REFER to symptom chart to determine if an inoperative condition exists. CHECK radio speakers and connections. REFER to symptom chart if diagnosis finds radio speakers inoperative. If FADER still inoperative, REMOVE radio chassis for service.
A16	CHECK INOPERATIVE OR INTERMITTENT		
	• Verify if condition is intermittent or inoperative. • **Is condition intermittent?**	Yes ▶ No ▶	GO to **A19**. GO to **A17**.
A17	CHECK FUSE		
	• Key off. • Check Fuse 11 (15A) in instrument panel fuse panel. • Check Fuse 17 (50A) in power distribution box. • **Are fuses open?**	Yes ▶ No ▶	REMOVE open fuse and GO to **A18**. GO to **A19**.
A18	CHECK FOR GROUNDED POWER FEED		
	• Key off, check Circuit 137 (Y/BK) at radio chassis connector C257 or C211 for a short to ground. • **Is power feed grounded?**	Yes ▶ No ▶	LOCATE short to ground and REPLACE or SERVICE. REPLACE fuse(s). RETEST system. REPLACE fuse and RETEST system. If fuse still opens, REMOVE radio chassis for service.
A19	CHECK POWER FEED		
	• Connect digital volt-ohmmeter between radio chassis connector C257 or C211, Circuit 137 (Y/BK) and known good ground. • Key to RUN or ACCESSORY. • **Does digital volt-ohmmeter indicate 10 volts or more?**	Yes ▶ No ▶	GO to **A23**. GO to **A20**.

Official Licensed Product

DIAGNOSIS AND TESTING (Continued)

PINPOINT TEST A: RADIO CHASSIS INOPERATIVE/DOES NOT OPERATE PROPERLY (Continued)

Test Step		Result	Action to Take
A20	CHECK WIRING CONTINUITY — FUSE TO RADIO		
	• Remove Fuse 17 (50A) temporarily. • Check continuity between Fuse 17 output cavity and radio chassis connector C257 or C211, Circuit 137 (Y/BK). • **Is continuity present?**	Yes ▶ No ▶	GO to **A21**. SERVICE wiring as required. RETEST system.
A21	CHECK WIRING CONTINUITY — FUSE TO IGNITION SWITCH		
	• Check continuity between Fuse 11 (15A) input cavity and ignition switch connector C269 Circuit 297 (BK/LG). • **Is continuity present?**	Yes ▶ No ▶	RECONNECT fuse and GO to **A22**. SERVICE wiring as required. RETEST system.
A22	CHECK IGNITION SWITCH POWER		
	• Connect digital volt-ohmmeter between ignition switch connector C269 Circuit 297 (BK/LG). • Key to RUN or ACCESSORY. • **Does digital volt-ohmmeter indicate 10 volts or more?**	Yes ▶ No ▶	REMOVE radio chassis for service. SERVICE ignition switch, Fuse 17 (50A), or Circuit 37 (Y) for open. REFER to Section 14-00.
A23	CHECK RADIO SPEAKERS		
	• With radio chassis operating, check if condition is on all radio speakers. • **Is condition present on all radio speakers?**	Yes ▶ No ▶	GO to **A24**. GO to **A25**.
A24	CHECK RADIO ANTENNA		
	• Check radio antenna, cable connections and wiring. • **Is antenna system operating properly?**	Yes ▶ No ▶	GO to **A25**. CONNECT, SERVICE or REPLACE antenna components as required. RETEST system.
A25	CHECK RADIO CHASSIS		
	• Substitute known good radio speakers to radio chassis. • Verify if condition is in radio speaker or radio chassis operation. • **Is radio chassis operating?**	Yes ▶ No ▶	CONNECT, SERVICE or REPLACE radio speakers and wiring as required. RETEST system. REMOVE radio chassis for service.

PINPOINT TEST B: RADIO CHASSIS DISPLAY BLANK — RADIO CHASSIS OPERATES

Test Step		Result	Action to Take
B1	CHECK OPERATION OF RADIO CHASSIS		
	• Key to RUN or ACCESSORY. • Press radio POWER on. • **Is radio chassis display lit?**	Yes ▶ No ▶	GO to **A1**. GO to **B2**.
B2	CHECK QUALITY SOUND FROM RADIO SPEAKERS		
	• Verify that quality sound is coming from radio speakers. • **Is quality sound coming from radio speakers?**	Yes ▶ No ▶	DISCONNECT Fuse 11 (15A) and GO to **B3**. GO to **A1**.
B3	CHECK WIRING CONNECTIONS		
	• Check wiring connectors and wires for damage, corrosion or open wire at radio chassis connector C257 or C211, Pin 6, Circuit 137 (Y/BK). • **Are wires and connections OK?**	Yes ▶ No ▶	RECONNECT fuse and GO to **B4**. SERVICE harness, connector and wiring as required. RETEST system.
B4	CHECK LCD SUPPLY		
	• Connect digital volt-ohmmeter between radio chassis connector C257, Circuit 484 (O/BK) and known good ground. • Key to RUN or ACCESSORY. • Measure voltage at Circuit 484 (O/BK). • **Does digital volt-ohmmeter indicate 10 volts or more?**	Yes ▶ No ▶	REMOVE radio chassis for service. LCD display is internally inoperative. GO to **B5**.

Official Licensed Product
Ford Motor Company

DIAGNOSIS AND TESTING (Continued)

PINPOINT TEST B: RADIO CHASSIS DISPLAY BLANK — RADIO CHASSIS OPERATES (Continued)

Test Step		Result ▶	Action to Take
B5	CHECK FUSE		
	• Key off. • Check Fuse 10 (4A) in instrument panel fuse panel. • **Is fuse open?**	Yes ▶ No ▶	GO to **B6**. GO to **B7**.
B6	CHECK FOR GROUNDED ILLUMINATION FEED		
	• Turn radio chassis off. • Disconnect radio chassis connector C257 or C211. • Check Circuit 19 (LB/R) for continuity to known good ground. • Check Circuit 294 (W/LB) for continuity to known good ground. • **Is continuity present?**	Yes ▶ No ▶	LOCATE short to ground and SERVICE. REPLACE fuse. RETEST system. REPLACE fuse. OPERATE. If fuse still opens, REMOVE radio chassis for service.
B7	CHECK WIRING — FUSE 4 (15A)		
	• Check continuity between Fuse 4 (15A) output cavity and IP Fuse 10 (4A) input cavity Circuit 294 (W/LB). • Check Circuit 19 (LB/R) for continuity from Fuse 10 (4A) output cavity to Pin 5 of radio chassis connector C257 or C211. • **Is continuity present?**	Yes ▶ No ▶	REFER to Section 14-00 for ignition switch or battery operation and circuit diagnosis. REPLACE or SERVICE wiring as required. RETEST system.

PINPOINT TEST C: RADIO CHASSIS/TAPE PLAYER INOPERATIVE/DOES NOT OPERATE PROPERLY

Test Step		Result ▶	Action to Take
C1	CHECK OPERATION OF RADIO CHASSIS		
	• Key to RUN or ACCESSORY. • Press radio POWER on. • **Is radio chassis display lit?**	Yes ▶ No ▶	GO to **C3**. GO to **C2**.
C2	CHECK QUALITY SOUND FROM RADIO SPEAKERS		
	• Verify that quality sound is coming from radio speakers. • **Is quality sound coming from radio speakers?**	Yes ▶ No ▶	GO to **D1**. GO to **C28**.
C3	DISPLAY TEST — AM BAND INDICATOR		
	• Press AM/FM button for AM band. • Press TUNE, SCAN or SCAN/TUNE button to station 1000 AM. • **Is display correct and is AM indicator lit?**	Yes ▶ No ▶	GO to **C4**. REMOVE radio chassis for service.
C4	DISPLAY TEST — FM1/FM2 BAND INDICATORS		
	• Press AM/FM button FM1 band. • Press SCAN or SCAN/TUNE button to station 88.9 FM. • Verify for FM2 band. • **Is display correct and are FM1 and FM2 indicators lighting respectively?**	Yes ▶ No ▶	GO to **C5**. REMOVE radio chassis for service.
C5	DISPLAY TEST — ST STEREO INDICATOR		
	• Press SCAN, SEEK or SCAN/TUNE buttons to a local FM stereo station. • **Is display correct and is ST indicator lit?**	Yes ▶ No ▶	GO to **C6**. REMOVE radio chassis for service.
C6	SEEK — HIGHER FREQUENCY STATION		
	• Press SEEK (>) and verify that number on display increases. NOTE: If display reads 1710 AM or 107.9 FM, display will not increase. The SEEK (>) button should be pressed until display reads less than 1710 AM or 107.9 FM. • **Is SEEK (>) operating properly?**	Yes ▶ No ▶	GO to **C7**. REMOVE radio chassis for service.

Ford Motor Company Licensed Product

DIAGNOSIS AND TESTING (Continued)

PINPOINT TEST C: RADIO CHASSIS/TAPE PLAYER INOPERATIVE/DOES NOT OPERATE PROPERLY (Continued)

Test Step		Result	Action to Take
C7	SEEK — LOWER FREQUENCY STATION		
	• Press SEEK (<) and verify that number on display decreases. NOTE: If display reads 530 AM or 87.7 FM, display will not decrease. The SEEK (<) button should be pressed until display reads greater than 530 AM or 87.7 FM. • **Is SEEK (<) operating properly?**	Yes ▶ No ▶	GO to **C8**. REMOVE radio chassis for service.
C8	STATION RECALL MEMORY TEST		
	• Press SCAN, SEEK or SCAN/TUNE buttons to a desired station. • Press and hold one of the memory buttons for two seconds until station sound is returned (repeat for all memory buttons). • Do for AM, FM1 and FM2 bands. • Turn radio chassis off, then on. • Press each station recall button and verify memory storage. • **Is memory test successful?**	Yes ▶ No ▶	GO to **C9**. REMOVE radio chassis for service.
C9	VOLUME CONTROL TEST		
	• Press VOLUME (+) and (-) to verify an increase and decrease in volume sound from radio chassis. • **Does volume change properly?**	Yes ▶ No ▶	GO to **C10**. CHECK radio speakers and connections. REFER to symptom chart if diagnosis finds radio speakers inoperative. REPEAT volume test. If volume still inoperative, REMOVE radio chassis for service.
C10	SCAN MODE TEST (ESC OR CDR)		
	• Press SCAN. (Go to CDR or ESC equipped). • (CDR) Display will blink SCN. • Press (>) side of SEEK button to begin forward scan mode up to next radio station for a five-second sampling. Verify several stations. • Press (<) side of SEEK button to begin reverse scan mode. Verify several stations. • Stop scan mode by pressing SCAN, or press the side of SEEK button presently matching direction of scanning. • Press SCAN button twice to change radio stations up or down one increment of frequency at a time. (Display will read TUNE), then, within five seconds, press (>) or (<) side of SEEK button. NOTE: Change stations quickly by pressing and holding SEEK (>) or (<). • (ESC) Scan mode will begin to scan up to next radio selection for a five-second sampling. • Stop scan mode by pressing SCAN button. • **Does (ESC/CDR) scan mode operate properly?**	Yes ▶ No ▶	GO to **C11**. REMOVE radio chassis for service.
C11	TUNE ANTENNA TEST (OPTIONAL)		
	• Tune radio on AM band outside of building. • Press SEEK to observe all listenable stations on band. Count number that can be tuned. • Compare to a vehicle with known good radio chassis. • **Are normal number of stations received?**	Yes ▶ No ▶	GO to **C12**. If an absolute number of stations cannot be tuned, PERFORM an antenna system check. If antenna operative, REMOVE radio chassis for service.

Official Licensed Product
Ford Motor Company

DIAGNOSIS AND TESTING (Continued)

PINPOINT TEST C: RADIO CHASSIS / TAPE PLAYER INOPERATIVE / DOES NOT OPERATE PROPERLY (Continued)

Test Step		Result	Action to Take
C12	SEEK — AUTOMATIC MUSIC SEARCH TEST		
	• Press SEEK button to change frequency up or down one increment at a time. Press SEEK (>) or (<) and release to go in the direction desired. To change frequencies quickly, press SEEK (>) or (<) and hold. • **Does SEEK function operate properly?**	Yes ▶ No ▶	GO to **C13**. REMOVE radio chassis for service.
C13	CLOCK — CONTROL TEST		
	• Press CLOCK button and simultaneously press SEEK (<) to advance hours or SEEK (>) to advance minutes. Release CLOCK button. • **Does CLOCK operate properly?**	Yes ▶ No ▶	GO to **C14** if AUTO PRESET button equipped, otherwise GO to **C15**. REMOVE radio chassis for service.
C14	AUTO PRESET — AUTOMATIC MEMORY STORE (CDR)		
	• Press AUTO PRESET button for three seconds. • Verify that radio chassis automatically presets strong stations sequentially on all memory recall buttons. • Turn off radio chassis, then turn back on. • Verify the same stations are in memory for all buttons. • **Does AUTO PRESET operate properly?**	Yes ▶ No ▶	GO to **C15**. REMOVE radio chassis for service.
C15	TONE CONTROL TEST		
	• BASS: Press AUDIO button repeatedly until BASS is displayed. Press VOLUME (+) to increase low frequency sounds and VOLUME (-) to decrease low frequency sounds. • TREBLE: Press AUDIO button repeatedly until TREB is displayed. Press VOLUME (+) to increase high frequency sounds and VOLUME (-) to decrease high frequency sounds. • Verify proper display and sounds for each tone control. • **Do BASS and TREBLE operate properly?**	Yes ▶ No ▶	GO to **C16**. CHECK radio speakers and connections. REFER to symptom chart if diagnosis finds radio speakers inoperative. If BASS and / or TREBLE still inoperative, REMOVE radio chassis for service.
C16	BALANCE CONTROL TEST		
	• BALANCE: Press AUDIO button repeatedly until BAL is displayed. Press VOLUME (+) to shift sound to right radio speakers and VOLUME (-) to shift sound to left radio speakers. • Verify proper display and sound in proper radio speakers. • **Does BALANCE operate properly?**	Yes ▶ No ▶	GO to **C17**. CHECK radio speakers and connections. REFER to symptom chart if diagnosis finds radio speakers inoperative. If BALANCE still inoperative, REMOVE radio chassis for service.
C17	FADER CONTROL TEST		
	• FADER: Press AUDIO button repeatedly until FADE is displayed. Press VOLUME (+) to shift sound to rear radio speakers and VOLUME (-) to shift sound to front radio speakers. • Verify proper display and sound in proper radio speakers. • **Does FADER operate properly?**	Yes ▶ No ▶	GO to **C18**. CHECK radio speakers and connections. REFER to symptom chart if diagnosis finds radio speakers inoperative. If FADER still inoperative, REMOVE radio chassis for service.
C18	TAPE PLAYER — LOADING TEST		
	• With radio chassis POWER on and key to RUN or ACCESSORY, insert known good cassette into tape player opening (with open edge of tape to the right). NOTE: If tape is at the end, playing will start on reverse side of tape. • Display will indicate arrows for ESC. • **Do loading of tape and display operate properly?**	Yes ▶ No ▶	GO to **C19**. REMOVE radio chassis with tape player for service.

DIAGNOSIS AND TESTING (Continued)

PINPOINT TEST C: RADIO CHASSIS/TAPE PLAYER INOPERATIVE/DOES NOT OPERATE PROPERLY (Continued)

Test Step		Result	Action to Take
C19	TAPE PLAYER — REV/FF TEST (ESC) • Press the left side of REV/FF button to rewind tape playing forward. Return to tape play by pressing right side of button. • Press the right side of REV/FF button to fast-forward tape playing forward. Return to play by pressing left side of button. • Pressing both sides of REV/FF button simultaneously will reverse tape to opposite side (track) of tape. • **Do REV/FF operate properly?**	Yes ▶ No ▶	GO to **C20**. REMOVE radio chassis with tape player for service.
C20	TAPE PLAYER — DOLBY TEST • (ESC) Press memory button (3) to select Dolby® Noise Reduction. Verify quality of sound. • Eject tape and verify Dolby® for Dynamic Noise Reduction on an FM stereo station. Verify sound. • **Does DOLBY operate properly?**	Yes ▶ No ▶	GO to **C21**. REMOVE radio chassis with tape player for service.
C21	TAPE PLAYER — EJECT TEST (ESC) • Press EJECT or EJCT button to eject tape from opening. Radio chassis will resume playing if power on. NOTE: Tapes can be ejected with or without power on or ignition switch power. • **Does EJECT operate properly?**	Yes ▶ No ▶	GO to **C22**. REMOVE radio chassis with tape player for service.
C22	TAPE PLAYER — RADIO SPEAKER CONTROL TEST • Adjust AUDIO button for BASS, TREBLE, BALANCE and FADER respectively, operating the VOLUME (+) and (-) for all conditions. • Adjust VOLUME in both conditions to verify loudness. • **Do all radio speaker controls operate properly?**	Yes ▶ No ▶	REFER to symptom chart to determine if an inoperative condition exists. CHECK radio speakers and connections. REFER to symptom chart if diagnosis finds radio speakers inoperative. If radio speaker controls inoperative in radio chassis, GO to **C23**.
C23	CHECK INOPERATIVE OR INTERMITTENT • Verify if condition is intermittent or inoperative. • **Is condition intermittent?**	Yes ▶ No ▶	GO to **C26**. GO to **C24**.
C24	CHECK FUSE • Key off. • Check Fuse 11 (15A) in instrument panel fuse panel. • Check Fuse 17 (50A) in power distribution box. • **Is either fuse open?**	Yes ▶ No ▶	REMOVE open fuse(s) and GO to **C25**. GO to **C27**.
C25	CHECK FOR GROUNDED POWER FEED • With key off, check Fuse 11 (15A), Circuit 137(Y/BK) at radio chassis connector C257 or C211 for a short to ground. • Check Fuse 17 (50A), Circuit 37 (Y). • **Is power feed grounded?**	Yes ▶ No ▶	LOCATE short to ground and REPLACE or SERVICE. REPLACE fuse(s). RETEST system. REPLACE fuse and RETEST system. If fuse still opens, REMOVE radio chassis for service.
C26	CHECK POWER FEED • Connect digital volt-ohmmeter between radio chassis connector C257 or C211, Pin 6 Circuit 137 (Y/BK) and a known good ground. • Key to RUN or ACCESSORY. • **Does digital volt-ohmmeter indicate 10 volts or more?**	Yes ▶ No ▶	GO to **C30**. GO to **C27**.

Official Licensed Product Ford Motor Company

DIAGNOSIS AND TESTING (Continued)

PINPOINT TEST C: RADIO CHASSIS/TAPE PLAYER INOPERATIVE/DOES NOT OPERATE PROPERLY (Continued)

Test Step		Result ▶	Action to Take
C27	CHECK WIRING CONTINUITY — FUSE 17 (50A)		
	• Remove Fuse 17 (50A) temporarily. • Check continuity between Fuse 17 (50A) and radio chassis connector C257 or C211, Pin 6 Circuit 137 (Y/BK). • **Is continuity present?**	Yes ▶ No ▶	GO to **C28**. SERVICE wiring or ignition switch for open. RETEST system.
C28	CHECK RADIO SPEAKERS		
	• With radio chassis operating, check if condition is on all radio speakers. • **Is condition present on all radio speakers?**	Yes ▶ No ▶	GO to **C27**. GO to **C29**.
C29	CHECK RADIO ANTENNA		
	• Check antenna, radio antenna lead in cable and wiring. • **Is antenna system operating properly?**	Yes ▶ No ▶	GO to **C30**. CONNECT, SERVICE or REPLACE antenna components as required. RETEST system.
C30	CHECK RADIO CHASSIS		
	• Substitute known good radio speaker to radio chassis. • Verify if condition is in radio speakers or radio chassis operation. • **Is radio chassis operating?**	Yes ▶ No ▶	CONNECT, SERVICE or REPLACE radio speakers and wiring as required. RETEST system. REMOVE radio chassis for service.

PINPOINT TEST D: RADIO CHASSIS/TAPE PLAYER DISPLAY BLANK — RADIO CHASSIS/TAPE PLAYER OPERATES

Test Step		Result ▶	Action to Take
D1	CHECK OPERATION OF RADIO CHASSIS		
	• Key to RUN or ACCESSORY. • Press radio POWER on. • **Is radio chassis display lit?**	Yes ▶ No ▶	GO to **C1**. GO to **D2**.
D2	CHECK QUALITY SOUND FROM RADIO SPEAKERS		
	• Verify that quality sound is coming from radio speakers. • **Is quality sound coming from radio speakers?**	Yes ▶ No ▶	DISCONNECT Fuse 11 (15A) and GO to **D3**. GO to **C1**.
D3	CHECK WIRING CONNECTIONS		
	• Check wiring connectors and wires for damage, corrosion or open wire at radio chassis connector C257 or C211, Circuit 137 (Y/BK) or Circuit 484 (O/BK) and Circuit 19 (LB/R). • **Are wires and connections OK?**	Yes ▶ No ▶	RECONNECT Fuse 11 (15A) and GO to **D4**. SERVICE harness, connector and wiring as required. RETEST system.
D4	CHECK LCD SUPPLY		
	• Connect digital volt-ohmmeter between radio chassis connector C257, Circuit 484 (O/BK), Pin 4 and known good ground. • Key to RUN or ACCESSORY. • Measure voltage from Circuit 484 (O/BK) and ground. • **Does digital volt-ohmmeter indicate 10 volts or more?**	Yes ▶ No ▶	REMOVE radio chassis for service. LCD display is internally inoperative. GO to **D5**.
D5	CHECK FUSE		
	• Key off. • Check Fuse 11 (15A) in instrument panel fuse panel. Check Fuse 17 (50A) in power distribution box. • **Is either fuse open?**	Yes ▶ No ▶	GO to **D6**. GO to **D7**.

Ford Motor Company

DIAGNOSIS AND TESTING (Continued)

PINPOINT TEST D: RADIO CHASSIS/TAPE PLAYER DISPLAY BLANK — RADIO CHASSIS/TAPE PLAYER OPERATES (Continued)

Test Step		Result ▶	Action to Take
D6	CHECK FOR GROUNDED LCD FEED		
	• Turn radio chassis off. • Check Fuse 11 (15A) Circuit 137 (Y/BK) for continuity to known good ground. • Check Circuit 484 (O/BK) for continuity to known good ground. • Check Circuit 297 (BK/LG) at ignition switch for continuity to known good ground. • Check Circuit 37 (Y) between IP fuse panel and power distribution box for continuity to known good ground. • **Is continuity present?**	Yes ▶ No ▶	SERVICE Circuit 137 (Y/BK), Circuit 484 (O/BK), Circuit 297 (BK/LG), Circuit 37 (Y), headlamp switch, or ignition switch for short to ground. REPLACE fuse. RETEST system. REPLACE fuse. OPERATE. If fuse still opens, REMOVE radio chassis for service.
D7	CHECK WIRING — FUSE 17 (50A)		
	• Check continuity between Fuse 17 (50A) and radio chassis connector C257, Circuit 484 (O/BK). • **Is continuity present?**	Yes ▶ No ▶	REFER to Section 14-00 for ignition switch or battery operation and circuit diagnosis. REPLACE or SERVICE wiring, headlamp switch or ignition switch as required. RETEST system.

PINPOINT TEST E: COMPACT DISC RADIO INOPERATIVE/DOES NOT OPERATE PROPERLY

Test Step		Result ▶	Action to Take
E1	CHECK OPERATION OF COMPACT DISC RADIO		
	• Key to RUN or ACCESSORY. • Press radio POWER on. • Verify radio chassis operates properly. (Refer to Pinpoint Test C.) • Handling test disc by its edge (label-side up), insert into compact disc radio. Verify powerloading. • **Is compact disc radio display lit?**	Yes ▶ No ▶	GO to **E3**. GO to **E2**.
E2	CHECK QUALITY SOUND FROM RADIO SPEAKERS		
	• Verify that quality sound is coming from radio speakers. • **Is quality sound coming from radio speakers?**	Yes ▶ No ▶	GO to Pinpoint Test F. GO to **E9**.
E3	COMPACT DISC RADIO — PLAY/STOP TEST		
	• STOP: Press PLAY/STOP button and verify disc stops playing, stop indicator illuminates and operation returns to radio or tape mode. • PLAY: Press PLAY/STOP button and verify disc resumes playing at point of stop, play indicator illuminates, track number illuminates and elapsed time illuminates. • **Do PLAY and STOP operate properly?**	Yes ▶ No ▶	GO to **E4**. REMOVE compact disc radio for service.
E4	COMPACT DISC RADIO — REVERSE/FAST — FORWARD TEST		
	• Press FF to fast-forward disc to a particular point. • Press FF to reverse disc to a particular point. NOTE: Observe elapsed time to indicate where to stop. • **Do REVERSE and FAST FORWARD operate properly?**	Yes ▶ No ▶	GO to **E5**. REMOVE compact disc radio for service.
E5	COMPACT DISC RADIO — SCAN MODE TEST		
	• Press SCAN button to activate scan mode. • Verify that disc scans to next selection and plays a five second sample then advances to next until SCAN button is pressed again. • Verify display indicates track number and elapsed time. • **Does SCAN operate properly?**	Yes ▶ No ▶	GO to **E6**. REMOVE compact disc radio for service.

Official Licensed Product Ford Motor Company

DIAGNOSIS AND TESTING (Continued)

PINPOINT TEST E: COMPACT DISC RADIO INOPERATIVE/DOES NOT OPERATE PROPERLY (Continued)

Test Step		Result	Action to Take
E6	COMPACT DISC RADIO — CDR SEEK CONTROL TEST		
	• Press SEEK (>>) to search for a later selection. • Press SEEK (<<) to search for a previous selection. • Verify during play and stop modes. • **Does SEEK control operate properly?**	Yes ▶ No ▶	GO to **E7**. REMOVE compact disc radio for service.
E7	COMPACT DISC RADIO — COMPRESS TEST		
	• Press COMPRESS to bring the softer and louder passages together. • Verify display indicates COMP. • **Does COMPRESS operate properly?**	Yes ▶ No ▶	GO to **E8**. REMOVE compact disc radio for service.
E8	COMPACT DISC RADIO — EJECT TEST		
	• Press EJECT button to eject disc and stop unit. • Verify display turns off and radio program or tape resumes playing. • **Does EJECT operate properly?**	Yes ▶ No ▶	GO to **E9**. REMOVE compact disc radio for service.
E9	COMPACT DISC RADIO — RADIO SPEAKER CONTROL TEST		
	• With disc inserted, press AUDIO button on radio chassis for BASS, TREBLE, BALANCE, and FADER operating the VOLUME (+) and (-) for all conditions. • Perform just VOLUME in both conditions to verify sound loudness. • **Do all radio speaker controls operate properly?**	Yes ▶ No ▶	REFER to symptom chart to determine if an inoperative condition exists. PERFORM tests as directed. REMOVE compact disc radio for service.

PINPOINT TEST F: COMPACT DISC RADIO DISPLAY BLANK/RADIO CHASSIS/DIGITAL AUDIO COMPACT DISC PLAYER OPERATES

Test Step		Result	Action to Take
F1	CHECK OPERATION OF COMPACT DISC RADIO		
	• Key to RUN or ACCESSORY. • Press radio chassis POWER on. • Verify radio chassis operates properly. (Refer to Pinpoint Test C.) • Handling test disc by its edge (label-side up), insert into compact disc radio. Verify powerloading. • **Is compact disc radio display lit?**	Yes ▶ No ▶	GO to **E1**. GO to **F2**.
F2	CHECK QUALITY SOUND FROM RADIO SPEAKERS		
	• Verify that quality sound is coming from radio speakers. • **Is quality sound coming from radio speakers?**	Yes ▶ No ▶	GO to **F3**. GO to Pinpoint Test E.
F3	CHECK WIRING CONNECTIONS		
	• Check wiring connectors and wires for damage, corrosion or open wire at compact disc radio connectors. • **Are wires and connections OK?**	Yes ▶ No ▶	GO to **F4**. SERVICE harness, connector and wiring as required. RETEST system.
F4	CHECK MEMORY SUPPLY		
	• Connect digital volt-ohmmeter between compact disc radio connector C257 or C211, Circuit 797 (LG/P) and known good ground. • **Does digital volt-ohmmeter indicate 10 volts or more?**	Yes ▶ No ▶	REMOVE compact disc radio for service. LCD display is internally inoperative. GO to **F5**.
F5	CHECK RADIO CHASSIS DISPLAY		
	• Verify that radio chassis display is lit with power on. • **Is radio chassis display lit?**	Yes ▶ No ▶	GO to **F6**. GO to **D1**.
F6	CHECK WIRING — MEMORY FUSE 1 (20A)		
	• Check continuity between memory Fuse 1 (20A) in power distribution box and compact disc radio chassis connector C257 or C211, Pin 8, Circuit 797 (LG/P). • **Is continuity present?**	Yes ▶ No ▶	REMOVE compact disc radio for service. SERVICE wiring as required. RETEST system.

Official Licensed Product Ford Motor Company®

DIAGNOSIS AND TESTING (Continued)

PINPOINT TEST G: TAPE PLAYER ONLY INOPERATIVE / DOES NOT OPERATE PROPERLY

Test Step		Result ▶	Action to Take
G1	TAPE PLAYER LOADING TEST (ESC)		
	• With radio chassis POWER on and key to RUN or ACCESSORY, insert known good cassette into tape player opening (with open edge of tape to the right). Verify automatic powerloading (tape player draws tape in and begins playing tape). NOTE: If tape is at the end, playing will start on reverse side of tape. • Display will indicate arrows. • **Does loading of tape and display operate properly?**	Yes ▶ No ▶	GO to **G2**. REMOVE radio chassis with tape player for service.
G2	TAPE PLAYER SEEK TEST (ESC)		
	• Press AMS button. AMS will be displayed. • Press SEEK (>) button to change tape to next selection. Then press SEEK (<) button to return to beginning of selection currently being heard. • **Does SEEK operate properly?**	Yes ▶ No ▶	GO to **G3**. REMOVE radio chassis with tape player for service.
G3	TAPE PLAYER REV / FF TEST (ESC)		
	• Press the left side of REV / FF button to rewind tape playing forward. Return to tape play by pressing right side of button. • Press the right side of REV / FF button to fast-forward tape playing forward. Return to play by pressing left side of button. • Pressing both sides of REV / FF button simultaneously will reverse tape to opposite side (track) of tape. • **Does REV / FF operate properly?**	Yes ▶ No ▶	GO to **G4**. REMOVE radio chassis with tape player for service.
G4	TAPE PLAYER DOLBY TEST (ESC)		
	• Press memory button (3) to select Dolby® Noise Reduction. Verify quality of sound. • Eject tape and verify Dolby® for Dynamic Noise Reduction on an FM stereo station. Verify sound. • **Does DOLBY operate properly?**	Yes ▶ No ▶	GO to **G5**. REMOVE radio chassis with tape player for service.
G5	TAPE PLAYER EJECT TEST (ESC)		
	• Press EJECT or EJCT button to eject tape from opening. Radio chassis will resume playing if power is on. NOTE: Tapes can be ejected with or without key on or ignition switch power. • **Does EJECTING operate properly?**	Yes ▶ No ▶	GO to **G6**. REMOVE radio chassis with tape player for service.
G6	TAPE PLAYER RADIO SPEAKER CONTROL TEST		
	• Press AUDIO button for BASS, TREBLE, BALANCE and FADER respectively, operating the VOLUME (+) and (-) for all conditions. • Press just VOLUME in both conditions to verify loudness. • **Do all speaker controls operate properly?**	Yes ▶ No ▶	REFER to symptom chart to determine if an inoperative condition exists. CHECK radio speakers and connections. REFER to symptom chart if diagnosis finds radio speakers inoperative. If speaker controls inoperative in radio chassis, REMOVE radio chassis with tape player for service.

Official Licensed Product

DIAGNOSIS AND TESTING (Continued)

Sound System Quality

PINPOINT TEST H: NOISY RECEPTION, AM AND FM

Test Step		Result	Action to Take
H1	CHECK ANTENNA CABLE CONNECTIONS		
	• Verify condition by operating radio chassis while engine is running, with vehicle in, or not in, motion. • Check antenna connections including extension cable (if so equipped). • **Are connections clean and secure?**	Yes ▶ No ▶	GO to **H2**. CLEAN and / or SECURE antenna cable connections as required.
H2	CHECK ANTENNA MOUNTING		
	• Check to make sure antenna is securely mounted to body at ground points. • **Are contacts clean and do they have metal-to-metal contact?**	Yes ▶ No ▶	GO to **H3**. CLEAN and SECURE connections as required.
H3	CHECK SUPPRESSION EQUIPMENT		
	• Check for presence of all required suppression equipment, radio frequency interference suppression bond and radio receiver hood bonding strap (if so equipped) for security, cleanliness and metal-to-metal connection. • **Are connections OK?**	Yes ▶ No ▶	GO to **H4**. REPLACE missing radio frequency interference suppression bonds, related equipment and CLEAN connections as required.
H4	CHECK MOUNTING AND CONNECTING WIRES OF THE FOLLOWING COMPONENTS		
	NOTE: The capacitor mounting points are used to complete the electrical circuit and must be mounted securely to clean surfaces. • Check the mounting and connecting wires of the generator's radio voltage regulator capacitor (if so equipped) and radio ignition interference capacitor for secureness, cleanliness and metal-to-metal contact. Refer to Group 14. • **Are connections OK?**	Yes ▶ No ▶	GO to **H5**. CLEAN and SECURE connections as required.
H5	CHECK OPERATION OF THE FOLLOWING COMPONENTS		
	• Check the operation of the generator's radio voltage regulator capacitor and radio ignition interference capacitor by replacing with known good components. • Check generator by disconnecting wiring harness from voltage regulator. Refer to Section 14-02A or Section 14-02B. • Verify radio reception. • **Is noise eliminated?**	Yes ▶ No ▶	SERVICE or REPLACE damaged components as required. GO to **H6**.
H6	CHECK IGNITION WIRES		
	• Check ignition wires for proper routing, grounding and secureness of connections. • **Are wires OK?**	Yes ▶ No ▶	GO to **H7**. REROUTE or REPLACE ignition wires or SECURE connections as required.
H7	CHECK IGNITION SYSTEM		
	• Check ignition system for proper operation. (Use Rotunda Distributorless Ignition System Tester 007-00075 or equivalent or check for open circuit ignition wires using ohmmeter.) Also, check spark plugs for cracked insulators. • **Is ignition system OK?**	Yes ▶ No ▶	GO to **H8**. SERVICE or REPLACE components as required.
H8	CHECK CHASSIS MOUNTING POINTS		
	• Check all radio chassis mounting points for secureness, cleanliness and metal-to-metal contact. • **Are mounting points OK?**	Yes ▶ No ▶	GO to **H9**. CLEAN and / or SECURE as required.

DIAGNOSIS AND TESTING (Continued)

PINPOINT TEST H: NOISY RECEPTION, AM AND FM (Continued)

Test Step		Result ▶	Action to Take
H9	SUBSTITUTE ANTENNA		
	• Substitute a known good radio speaker and antenna, making sure to ground antenna base to an unpainted metal surface. • Verify operation of radio chassis. • **Is noise eliminated?**	Yes ▶ No ▶	REPLACE or SERVICE radio speaker or antenna. GO to **H10**.
H10	SUBSTITUTE ANTENNA EXTENSION CABLE		
	• Substitute a known good radio antenna lead in cable. • Verify operation of radio chassis. • **Is noise eliminated?**	Yes ▶ No ▶	REPLACE radio antenna lead in cable. GO to **H11**.
H11	SUBSTITUTE RADIO		
	• Substitute known good radio chassis. • Verify operation of radio chassis. • **Is noise eliminated?**	Yes ▶ No ▶	Have radio chassis serviced at an authorized service center. GO to **H12**.
H12	CHECK AMPLIFIER		
	• Substitute a known good radio amplifier (premium system only). • Verify operation of radio chassis. • **Is noise eliminated?**	Yes ▶ No ▶	Have radio amplifier serviced at an authorized service center. GO to **H13**.
H13	REPOSITION THE FOLLOWING COMPONENTS		
	• Check if noise can be eliminated by repositioning antenna, radio speaker or radio power feed wires away from other wires or brackets. • Verify operation of radio chassis. • **Is noise eliminated?**	Yes ▶ No ▶	REPOSITION and TAPE in place. GROUND various parts of the vehicle to the frame using a jumper cable. For example: engine, fenders, quarter panels, stone deflectors, engine air cleaner, body sheet metal. When noise is eliminated, PROVIDE a permanent ground where required.

Ford Motor Company

PINPOINT TEST J: NOISY RECEPTION, AM ONLY

Test Step		Result ▶	Action to Take
J1	CHECK ANTENNA CABLE CONNECTIONS		
	• Verify condition by operating radio chassis while engine is running, with vehicle in, or not in, motion. • Check antenna cable connections including extension cable (if so equipped). • **Are connections clean and secure?**	Yes ▶ No ▶	GO to **J2**. CLEAN and SECURE antenna cable connections as required.
J2	CHECK ANTENNA MOUNTING		
	• Check to make sure antenna is securely mounted to body at ground points. • **Are contacts clean and do they have metal-to-metal contact?**	Yes ▶ No ▶	GO to **J3**. CLEAN and SECURE connections as required.
J3	CHECK SUPPRESSION EQUIPMENT		
	• Check for presence of all required suppression equipment, radio frequency interference suppression bond and radio receiver hood bonding strap (if so equipped) for security, cleanliness and metal-to-metal connection. • **Are connections OK?**	Yes ▶ No ▶	GO to **J4**. REPLACE missing equipment and CLEAN connections as required.

DIAGNOSIS AND TESTING (Continued)

PINPOINT TEST J: NOISY RECEPTION, AM ONLY (Continued)

Test Step		Result ▶	Action to Take
J4	CHECK MOUNTING AND CONNECTING WIRES OF FOLLOWING COMPONENTS		
	• Check the mounting and connecting wires of the radio voltage regulator capacitor (if so equipped), radio ignition interference capacitor and radio interference capacitor for secureness, cleanliness and metal-to-metal contact. Refer to Group 14. NOTE: The capacitor mounting points are used to complete the electrical circuit and must be mounted securely to clean surfaces. • **Are connections OK?**	Yes ▶ No ▶	GO to **J5**. CLEAN and SECURE connections as required.
J5	CHECK OPERATION OF THE FOLLOWING COMPONENTS		
	• Check the operation of the radio voltage regulator capacitor, radio ignition interference capacitor and radio interference capacitor by replacing with known good components. • Check generator by disconnecting wiring harness from voltage regulator. • Verify radio chassis reception. • **Is noise eliminated?**	Yes ▶ No ▶	SERVICE or REPLACE damaged components as required. GO to **J6**.
J6	CHECK IGNITION WIRES		
	• Check ignition wires for proper routing, grounding and secureness of connections. • **Are wires OK?**	Yes ▶ No ▶	GO to **J7**. REROUTE or REPLACE ignition wires or SECURE connections as required.
J7	CHECK IGNITION SYSTEM		
	• Check ignition system for proper operation. (Use Rotunda Distributorless Ignition System Tester 007-00075 or equivalent or check for open circuit ignition wires using ohmmeter.) Also check spark plugs for cracked insulators. • **Is ignition system OK?**	Yes ▶ No ▶	GO to **J8**. SERVICE or REPLACE components as required.
J8	CHECK CHASSIS MOUNTING POINTS		
	• Check all radio chassis mounting points for secureness, cleanliness and metal-to-metal contact. • **Are mounting points OK?**	Yes ▶ No ▶	GO to **J9**. CLEAN and SECURE as required.
J9	SUBSTITUTE ANTENNA		
	• Substitute a known good radio speaker and antenna, making sure to ground antenna base to an unpainted metal surface. • Verify radio chassis operation. • **Is noise eliminated?**	Yes ▶ No ▶	REPLACE or SERVICE radio speaker or antenna. GO to **J10**.
J10	SUBSTITUTE ANTENNA CABLE		
	• Substitute a known good radio antenna lead in cable. • Verify radio chassis operation. • **Is noise eliminated?**	Yes ▶ No ▶	REPLACE radio antenna lead in cable. GO to **J11**.
J11	SUBSTITUTE RADIO		
	• Substitute known good radio chassis. • Verify radio chassis operation. • **Is noise eliminated?**	Yes ▶ No ▶	Have radio chassis serviced at an authorized service center. GO to **J12**.
J12	CHECK AMPLIFIER		
	• Substitute a known good radio amplifier (premium system only). • Verify radio chassis operation. • **Is noise eliminated?**	Yes ▶ No ▶	Have radio amplifier serviced at an authorized service center. GO to **J13**.

Licensed Product Ford Motor Company

DIAGNOSIS AND TESTING (Continued)

PINPOINT TEST J: NOISY RECEPTION, AM ONLY (Continued)

Test Step		Result ▶	Action to Take
J13	REPOSITION THE FOLLOWING COMPONENTS		
	• Check if noise can be eliminated by repositioning antenna, radio speaker or radio power feed wires away from other wires or brackets. • Verify operation of radio chassis. • **Is noise eliminated?**	Yes ▶	REPOSITION permanently by taping.
		No ▶	GROUND various parts of the vehicle to the frame using a jumper cable. For example: engine, fenders, quarter panels, stone deflectors, air cleaner, body sheet metal. When noise is eliminated, PROVIDE a permanent ground where required.

PINPOINT TEST K: NOISY RECEPTION, FM ONLY

Test Step		Result ▶	Action to Take
K1	DETERMINE IF CONCERN IS WITH FM RECEPTION LIMITATION		
	• Verify condition by operating radio chassis with engine running and vehicle not in motion. • If noise is on FM stereo, determine if customer concern is due to FM stereo reception limitation. • **Is reception normal?**	Yes ▶	EXPLAIN and DEMONSTRATE to customer. INFORM customer of methods for obtaining best reception.
		No ▶	GO to **K2**.
K2	CHECK ANTENNA CABLE CONNECTIONS		
	• Check antenna cable connections. • **Are connections clean and tight?**	Yes ▶	GO to **K3**.
		No ▶	CLEAN and / or SECURE as required.
K3	CHECK ANTENNA MOUNTING		
	• Check to make sure antenna is securely mounted to body and base screws are tight. • **Are mounting points tight?**	Yes ▶	GO to **K4**.
		No ▶	SECURE as required.
K4	CHECK IGNITION WIRES ROUTING		
	• Check ignition wires for proper routing and secureness of connections. • **Are wires OK?**	Yes ▶	GO to **K5**.
		No ▶	REROUTE and SECURE connections as required.
K5	CHECK TYPE OF IGNITION WIRES		
	• Check if ignition wires are suppressor-type and if spark plugs are the correct type. • **Are ignition wires and spark plugs correct?**	Yes ▶	GO to **K6**.
		No ▶	REPLACE spark plug or ignition wires with the correct type.
K6	CHECK IGNITION SYSTEM		
	• Check ignition system for proper operation. (Use Rotunda Distributorless Ignition System Tester 007-00075 or equivalent or check for open circuit ignition wires using ohmmeter.) Also check spark plugs for cracked insulators. • **Is ignition system OK?**	Yes ▶	GO to **K7**.
		No ▶	SERVICE or REPLACE components as required.
K7	CHECK RADIO CHASSIS MOUNTING		
	• Check all radio chassis mounting points for secureness, cleanliness and metal-to-metal contact. • **Are radio mounting points OK?**	Yes ▶	GO to **K8**.
		No ▶	CLEAN and / or SECURE as required.
K8	SUBSTITUTE ANTENNA		
	• Substitute a known good antenna, making sure to ground antenna base to an unpainted metal surface. NOTE: All surfaces used for grounding must be clean to ensure good electrical contact. Remove any dirt, rust, grease, paint, or other contaminants. • Verify radio chassis operation. • **Is noise eliminated?**	Yes ▶	REPLACE antenna.
		No ▶	GO to **K9**.

Licensed Product Ford Motor Company

DIAGNOSIS AND TESTING (Continued)

PINPOINT TEST K: NOISY RECEPTION, FM ONLY (Continued)

Test Step		Result ▶	Action to Take
K9	SUBSTITUTE ANTENNA CABLE		
	• Substitute a known good radio antenna lead in cable. • Verify radio chassis operation. • **Is noise eliminated?**	Yes ▶ No ▶	REPLACE antenna. GO to **K10**.
K10	CHECK GENERATOR		
	• Check generator by disconnecting wiring from voltage regulator. • Verify radio chassis operation. • **Is noise eliminated?**	Yes ▶ No ▶	CHECK generator. REFER to Section 14-00. SERVICE or REPLACE as required. GO to **K11**.
K11	SUBSTITUTE RADIO CHASSIS		
	• Substitute a known good radio chassis. • Verify radio chassis operation. • **Is noise eliminated?**	Yes ▶ No ▶	Have radio chassis serviced by an authorized service center. GO to **K12**.
K12	CHECK AMPLIFIER		
	• Substitute a known good radio amplifier (Premium system only). • Verify radio chassis operation. • **Is noise eliminated?**	Yes ▶ No ▶	Have radio amplifier serviced at an authorized service center. GO to **K13**.
K13	REPOSITION THE FOLLOWING COMPONENTS		
	• Check if noise can be eliminated by repositioning antenna, radio speaker or radio power feed wires away from other wires or brackets. NOTE: All surfaces used for grounding must be clean to ensure good electrical contact. Remove any dirt, rust, grease, paint, or other contaminants. • Verify radio chassis operation. • **Is noise eliminated?**	Yes ▶ No ▶	REPOSITION permanently by taping. GROUND various parts of the vehicle to the frame using a jumper cable. For example: engine, fenders, quarter panels, stone deflectors, air cleaner, body sheet metal. When noise is eliminated, PROVIDE permanent ground where required.

PINPOINT TEST L: ONE OR MORE SPEAKERS DISTORTED — NOT ALL SPEAKERS

Test Step		Result ▶	Action to Take
L1	CHECK FOR DISTORTION		
	• Check all radio speakers for distortion. • **Are all radio speakers distorted?**	Yes ▶ No ▶	GO to **M1**. GO to **L2**.
L2	CHECK FOR RADIO SPEAKER PROBLEMS		
	• Check for loose trim panels, grilles or attachments which might cause rattles in the area of the radio speaker that is considered distorted. • Check for pinched or broken wires at or near the radio chassis or radio speakers considered distorted. • Check for foreign material in radio speaker(s) cone. • **Are there any visible radio speaker concerns?**	Yes ▶ No ▶	SERVICE as required. If still distorted, GO to **L3**. GO to **L3**.
L3	CONNECT TEST SPEAKER		
	• Connect a test radio speaker to the wiring for each distorted radio speaker. • **Does the test radio speaker get distorted?**	Yes ▶ No ▶	GO to **L4**. REPLACE radio speaker as required.
L4	CHECK CONNECTIONS AND WIRING		
	• Check for shorts between radio speaker connector. • Check radio chassis and (if so equipped) radio amplifier, wiring harness for damage and shorts. • **Are any shorts or damage found?**	Yes ▶ No ▶	SERVICE as required. GO to **L5** if equipped with radio amplifier. Otherwise, REMOVE radio chassis for service.

DIAGNOSIS AND TESTING (Continued)

PINPOINT TEST L: ONE OR MORE SPEAKERS DISTORTED — NOT ALL SPEAKERS (Continued)

Test Step		Result ▶	Action to Take
L5	CONNECT TEST AMPLIFIER		
	• Connect a test radio amplifier in place of system radio amplifier. • Verify radio amplifier and radio chassis performance. • **Does test radio amplifier cause distortion in radio speakers?**	Yes ▶ No ▶	REMOVE radio chassis for service. REMOVE radio amplifier for service.

PINPOINT TEST M: ALL SPEAKERS DISTORTED

Test Step		Result ▶	Action to Take
M1	CHECK FOR DISTORTION		
	• Check all radio speakers for distortion. • **Are all radio speakers distorted?**	Yes ▶ No ▶	GO to **M2**. GO to **L1**.
M2	CHECK VOLUME RANGE FOR DISTORTION		
	• Check volume range for distortion. • **Is distortion only at high volume?**	Yes ▶ No ▶	System OK. STOP test. GO to **M3**.
M3	CONNECT TEST RADIO CHASSIS		
	• Connect a test radio chassis in place of system radio chassis. • **Is distortion still present?**	Yes ▶ No ▶	REMOVE radio amplifier for service. REMOVE radio chassis for service.

PINPOINT TEST N: NO SOUND FROM ONE OR MORE SPEAKERS — NOT ALL SPEAKERS

Test Step		Result ▶	Action to Take
N1	CHECK FOR SOUND AT EACH RADIO SPEAKER		
	• Check for sound at each radio speaker. • **Are all radio speakers without sound?**	Yes ▶ No ▶	GO to **P1**. GO to **N2**.
N2	CHECK CONNECTORS TO RADIO SPEAKERS		
	• Check wiring to inoperative radio speakers from radio chassis and radio amplifier for opens or shorts. • **Are all connections and wiring OK?**	Yes ▶ No ▶	GO to **N3**. CONNECT, REPLACE or SERVICE as required.
N3	CHECK WITH TEST RADIO SPEAKER		
	• Check system with test radio speaker substituted for system inoperative radio speaker. • **Does test radio speaker operate?**	Yes ▶ No ▶	REPLACE inoperative radio speaker. GO to **N4**.
N4	CHECK RADIO CHASSIS AND RADIO AMPLIFIER WIRING		
	• Check wiring between radio chassis and radio amplifier (if so equipped) for damage, broken pins in connectors, solder bridges or stray wires that could cause shorts. • **Are connections and wiring OK?**	Yes ▶ No ▶	GO to **N5**. CONNECT, REPLACE or SERVICE as required.
N5	CHECK WITH TEST RADIO		
	• Substitute a test radio chassis for the system radio chassis. • **Does test radio chassis provide sound to all radio speakers?**	Yes ▶ No ▶	REMOVE radio chassis for service. REMOVE radio amplifier for service.

PINPOINT TEST P: NO SOUND FROM ALL SPEAKERS

Test Step		Result ▶	Action to Take
P1	CHECK FOR SOUND AT EACH RADIO SPEAKER		
	• Key to RUN or ACCESSORY. • Check for sound at each radio speaker. • **Are all radio speakers without sound?**	Yes ▶ No ▶	GO to **P2**. GO to **N1**.

Official Licensed Product

DIAGNOSIS AND TESTING (Continued)

PINPOINT TEST P: NO SOUND FROM ALL SPEAKERS (Continued)

Test Step		Result ▶	Action to Take
P2	CHECK POWER OF SYSTEM		
	• Verify power ON and all radio speaker, radio chassis and radio amplifier connections and wiring are not damaged, loose, open or shorting. • With digital volt-ohmmeter, verify power from radio chassis connector C257 or C211, Circuit 137 (Y/BK) to ground with key to RUN or ACCESSORY. • **Does digital volt-ohmmeter indicate 10 or more volts?**	Yes ▶ No ▶	GO to **P4**. GO to **P3**.
P3	CHECK CONTINUITY OF POWER CIRCUITS		
	• Key off. • Using proper schematic for system inoperative, verify continuity of power circuits to source. • Verify voltage at ignition switch with key to RUN (engine off) or ACCESSORY. • **Are the power circuits operating?**	Yes ▶ No ▶	GO to **P4**. SERVICE or REPLACE as required. REFER to Section 14-00.
P4	CHECK FOR SHORT TO GROUND AT SPEAKER(S)		
	• Check for short to ground at one or more radio speakers that can cause radio amplifier shut-down. • **Are any shorts found?**	Yes ▶ No ▶	SERVICE as required. REMOVE radio amplifier for service if so equipped. Otherwise, REMOVE radio chassis for service.

PINPOINT TEST Q: POOR SOUND QUALITY FROM ONE OR MORE SPEAKERS — NOT ALL SPEAKERS

Test Step		Result ▶	Action to Take
Q1	CHECK POOR SOUND QUALITY IN RADIO SPEAKERS		
	• Verify poor sound quality in radio speakers. • **Is poor sound quality in all radio speakers?**	Yes ▶ No ▶	GO to **R1**. GO to **Q2**.
Q2	CHECK RESISTANCE OF RADIO SPEAKER(S)		
	• With power off, check resistance of radio speakers that have poor quality sound from radio amplifier or radio chassis output, back to the return input on radio amplifier or radio chassis. • **Is resistance load in excess of the 7-ohm speaker?**	Yes ▶ No ▶	CHECK for load in radio speakers or wiring. Excess wire may cause loading effect. SERVICE and RETEST for quality sound. GO to **Q3**.
Q3	CHECK RADIO SPEAKER(S)		
	• Check radio speakers for damage to cone or a foreign material causing poor sound. • Verify radio speakers are securely mounted. • **Are radio speakers OK?**	Yes ▶ No ▶	GO to **Q4**. SERVICE or REPLACE radio speakers and RETEST for quality sound.
Q4	CHECK CONNECTIONS AND WIRING		
	• Check connections and wiring at radio speakers, radio amplifier and radio chassis for damage, corrosion or shorts to grounds or loads. • **Are connections and wiring OK?**	Yes ▶ No ▶	GO to **Q5**. SERVICE or REPLACE connections and wiring as required. RETEST for quality sound.
Q5	CHECK WITH TEST RADIO SPEAKER		
	• Substitute a test radio speaker for system radio speakers that have poor quality sound. • **Does test radio speaker have poor quality sound?**	Yes ▶ No ▶	REMOVE radio chassis for service. REPLACE or SERVICE radio speakers as required. RETEST for quality sound.

DIAGNOSIS AND TESTING (Continued)

PINPOINT TEST R: POOR SOUND QUALITY FROM ALL SPEAKERS

Test Step		Result	Action to Take
R1	CHECK POOR SOUND QUALITY IN RADIO SPEAKERS		
	• Verify poor sound quality in radio speakers. • **Is poor sound quality in all radio speakers?**	Yes ▶ No ▶	GO to **R2**. GO to **Q1**.
R2	CHECK CONNECTIONS AND WIRING		
	• Check connection and wiring at radio speakers, radio amplifier and radio chassis for damage, corrosion or shorts to ground or loads. • **Are connections and wiring OK?**	Yes ▶ No ▶	GO to **R3** if equipped with external radio amplifier. Otherwise, REMOVE radio chassis for service. SERVICE or REPLACE connections and wiring as required. RETEST for quality sound.
R3	CHECK WITH TEST RADIO AMPLIFIER		
	• Substitute a test radio amplifier for system radio amplifier. • **Does test radio amplifier perform with poor quality sound?**	Yes ▶ No ▶	REMOVE system radio chassis for service. REMOVE system radio amplifier for service.

Component Tests

Radio Antenna

Refer to the following illustration for radio antenna resistance checks.

Official Licensed Product
Ford Motor Company

Resistance Checks

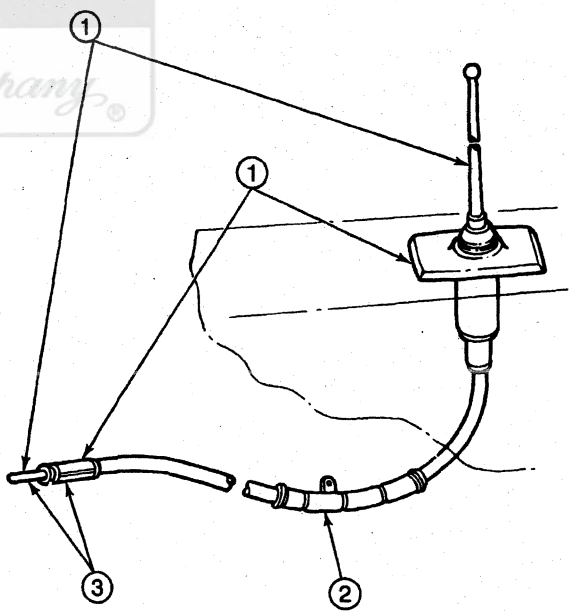

K18878-C

Item	Part Number	Description
1	—	Must Be Less Than 5.0 Ohms on X1 or Low Setting
2	—	In-Line Connector (Located Above Glove Compartment)
3	—	Must Be Infinity on X1000 Setting or Highest Range Available

DIAGNOSIS AND TESTING (Continued)

Resistance Checks, Cable, Detachable Antenna and Mast

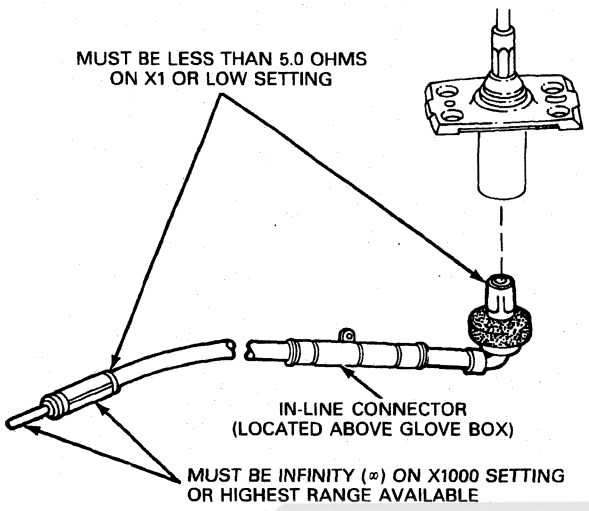

K18879-A

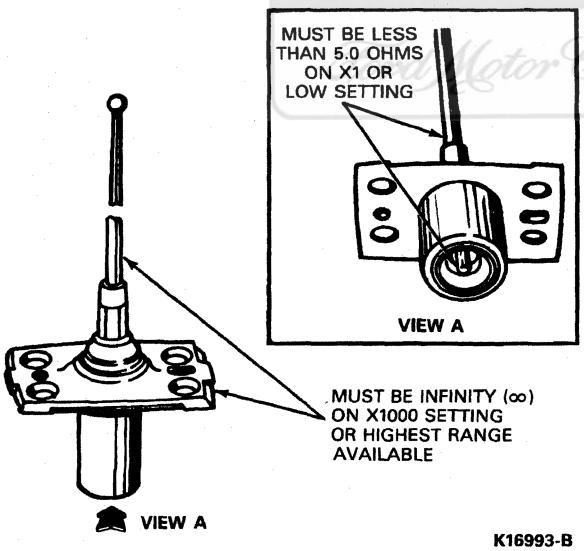

K16993-B

Resistance Check, Antenna with Extension Cable

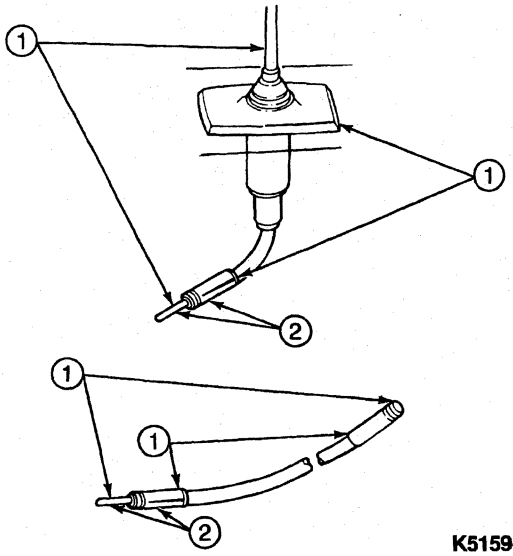

K5159-C

Item	Part Number	Description
1	—	Must Be Less Than 5.0 Ohms on X1 or Low Setting
2	—	Must Be at Infinity on X1000 Setting or Highest Range Available

CLEANING AND INSPECTION

Cassette Tape Player Head

The playback head and capstan in the tape player can accumulate tape coating residue (oxide) as the tape passes over the head. This accumulation will need to be periodically removed as part of normal maintenance if it causes weak or wavering sound. It is recommended, for best performance, that the player be cleaned every 10 to 12 hours of playing time using a Ford Cassette Player Cleaning Cartridge or equivalent.

CAUTION: The use of other cassette cleaners is not recommended. Damage to the cassette player could result.

An alternate method of cleaning is to hold the player door open and clean the playback head with a cotton swab, slightly moistened with alcohol. To clean the capstan, trip the on-off switch at the slot with the eraser end of a pencil and hold the alcohol-moistened swab against the rotating capstan.

Official Licensed Product Ford Motor Company

CLEANING AND INSPECTION (Continued)

CAUTION: Excess alcohol on the swab can run down the capstan and damage the bearings. Do not use carbon tetrachloride.

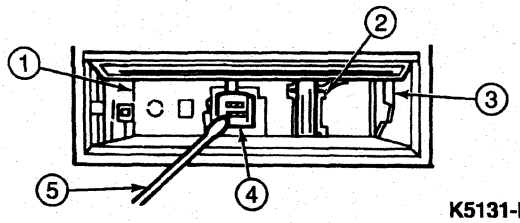

K5131-B

Item	Part Number	Description
1	—	Cartridge Door (Part of 18806)
2	—	Capstan Shaft (Part of 18806)
3	—	Motor On-Off (Part of 18806)
4	—	Playback Head (Part of 18806)
5	—	Cotton Swab

(Continued)

SPECIAL SERVICE TOOLS/EQUIPMENT

ROTUNDA EQUIPMENT

Model	Description
007-00075	Distributorless Ignition System Tester
105-R0051	73 Digital Multimeter

Official Licensed Product
Ford Motor Company

SECTION 15-01 Radio, Tape Chassis and Digital Audio Compact Disc Player

SUBJECT	PAGE
VEHICLE APPLICATION	15-01-1
DESCRIPTION AND OPERATION	
Cassette Tape Player	15-01-1
Compact Disc Player, Digital Audio	15-01-1
Sound Systems	15-01-1
Digital Audio Compact Disc Player	15-01-1
Premium	15-01-1
DIAGNOSIS AND TESTING	
Radio	15-01-1
REMOVAL AND INSTALLATION	
Radio Amplifier	15-01-5
Radio Chassis	15-01-2
Radio Frequency Interference Suppression Equipment	15-01-2
SPECIFICATIONS	15-01-5
SPECIAL SERVICE TOOLS/EQUIPMENT	15-01-6

VEHICLE APPLICATION

F-250 Heavy Duty, F-350 and F-Super Duty

DESCRIPTION AND OPERATION

Official Licensed Product

Sound Systems

The AM radio is standard on all F-Series XL. The AM/FM radio is standard on all F-Series XLT. All radios have an electronic display and an integral clock. An AM/FM cassette and compact disc radio are optional.

Premium

A premium sound system option is available in conjunction with the AM/FM compact disc radio.

Digital Audio Compact Disc Player

The compact disc unit and the electronic stereo radio have been combined with the digital audio compact disc player. Most of the features for this unit work both radio and CD operations, depending on which mode the radio chassis specifies. Refer to the Audio System Operating Guide for further operation instructions.

Cassette Tape Player

CAUTION: Before turning off the radio chassis or ignition switch (11572), always eject any cassette being played. Leaving the tape mechanism stopped while a tape is engaged can result in damage to the tape, pinch roller or capstan.

Compact Disc Player, Digital Audio

Error Messages

If a disc has been inserted and then is ejected and the ERROR message begins scrolling in the display, remove the disc and reinsert it right side up (label side up).

DIAGNOSIS AND TESTING

Radio

Refer to Section 15-00.

REMOVAL AND INSTALLATION

Radio Chassis

NOTE: The following removal and installation procedures also apply to compact disc player, digital audio, non-premium sound and premium sound systems.

SPECIAL SERVICE TOOL(S) REQUIRED

Description	Tool Number
Radio Removing Tool	T87P-19061-A

WARNING: USE ONLY PROPERLY INSTALLED FCC APPROVED RADIO TRANSMITTING EQUIPMENT. USE OF OTHER TRANSMITTING EQUIPMENT CAN CAUSE THE VEHICLE TO MALFUNCTION OR STALL. IF THE ENGINE STALLS, POWER BRAKE AND POWER STEERING ASSIST WILL STOP. CONSULT YOUR AUTHORIZED DEALER BEFORE INSTALLING ANY RADIO TRANSMITTER.

Removal

1. Disconnect the battery to starter relay cable (14300).
2. Insert Radio Removing Tool T87P-19061-A into radio face plate. Press in 25.4 mm (1 inch) to release radio retaining clips. While flexing the radio removal tool outward, away from the center of the radio chassis (18806), pull radio chassis outward from instrument panel (04320) using tool as handles.
3. Disconnect the radio antenna lead in cable (18812) and radio wiring connectors.

Installation

1. NOTE: If radio chassis is being replaced, transfer radio chassis support (18888) to new radio chassis.

   Connect the radio antenna lead in cable and radio wiring connectors.
2. Position the radio chassis in the instrument panel and slide the radio chassis toward the instrument panel and on the mounting bracket until holding brackets engage.
3. NOTE: When the battery (10655) has been disconnected and reconnected, some abnormal drive symptoms may occur while the powertrain control module (PCM)(12A650) relearns its adaptive strategy. The vehicle may need to be driven 16 km (10 miles) or more to relearn the strategy.

   Connect the battery ground cable (14301).
4. Check the operation of the radio chassis and engine.

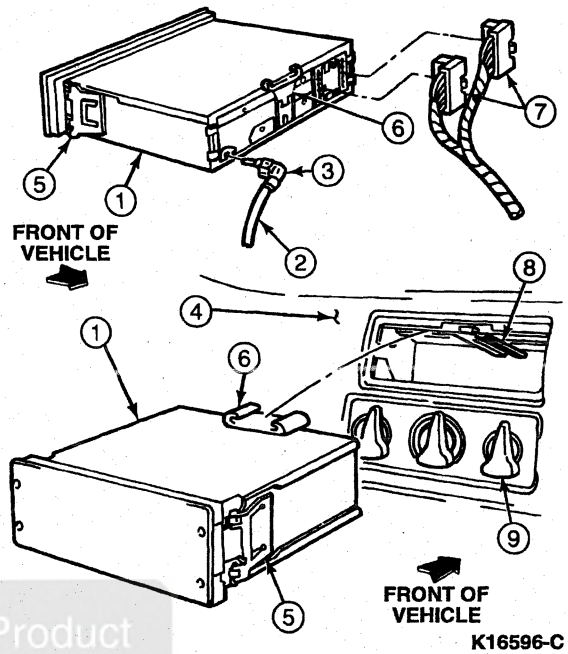

Item	Part Number	Description
1	18806	Radio Chassis
2	18812	Radio Antenna Lead In Cable
3	—	Antenna Cable Jack (Part of Antenna Kit 18813)
4	04320	Instrument Panel
5	—	Spring Clips (Part of 18806)
6	18888	Radio Chassis Support
7	14401	Main Wiring
8	10A860	Mounting Bracket
9	—	Heater/A/C Control (Part of 18D283)

Radio Frequency Interference Suppression Equipment

The radio suppression equipment used on the different vehicles is shown in the following illustrations. When replacing any radio suppression equipment components, be sure that a good contact is made at all attachments. Remove any paint or dirt from between a condenser and its ground. Tighten all nuts and bolts securely.

Ford Motor Company Proprietary Product

REMOVAL AND INSTALLATION (Continued)

NOTE: Use a rubber mallet to install radio frequency interference suppression bond spring clips, or damage to the spring clips may occur.

Capacitor Installation

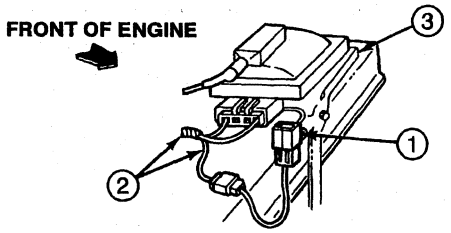

5.8L ENGINE

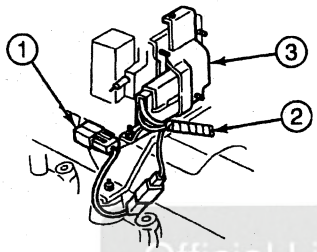

7.5L ENGINE DK0336-A

Item	Part Number	Description
1	18801	Radio Ignition Interference Capacitor
2	9D930	Fuel Charging Wiring
3	12029	Ignition Coil

Radio Frequency Interference Suppression Bond Assembly, Dash Panel

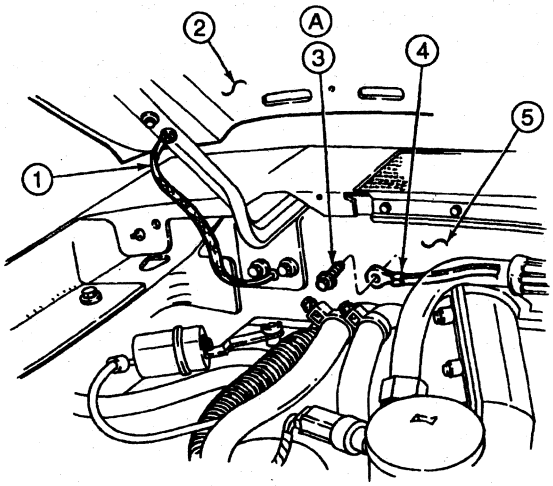

INSTALLATION OF HOOD STRAP K19556-C

Item	Part Number	Description
1	18870	Radio Receiver Hood Bonding Strap
2	16612	Hood
3	N801846-S36MG	Screw
4	19A095	Radio Frequency Interference Suppression Bond
5	01610	Dash Panel
A	—	Tighten to 7-9 N·m (62-80 Lb-In)

Official Licensed Product Ford Motor Company

REMOVAL AND INSTALLATION (Continued)

Radio Frequency Interference Suppression Bond Assembly

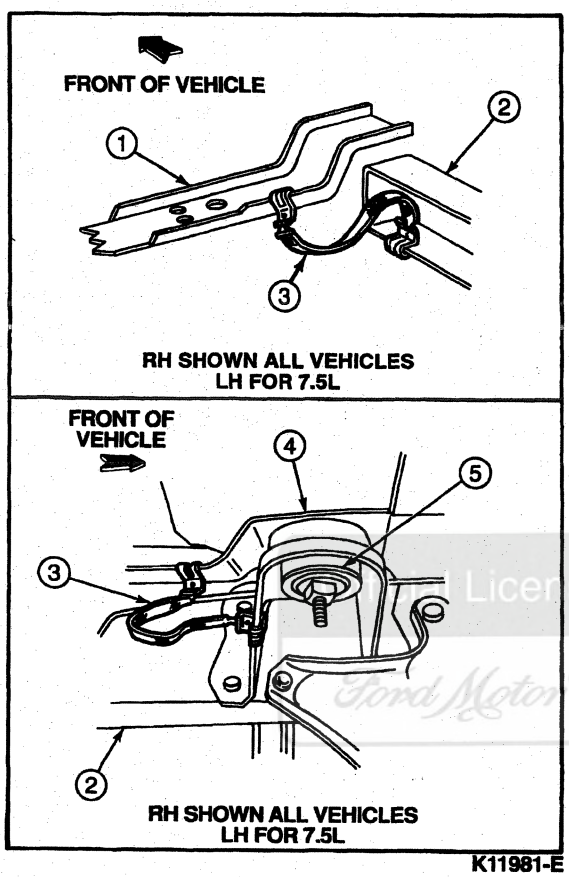

Item	Part Number	Description
1	16138	Radiator Support
2	5005	Frame

(Continued)

Item	Part Number	Description
3	19A095	Radio Frequency Interference Suppression Bond
4	11135	Front Floor Pan
5	00155	Body Bolt Absorber

Ford Licensed Product
Ford Motor Company

REMOVAL AND INSTALLATION (Continued)

Radio Frequency Interference Suppression Equipment, Engine-Mounted

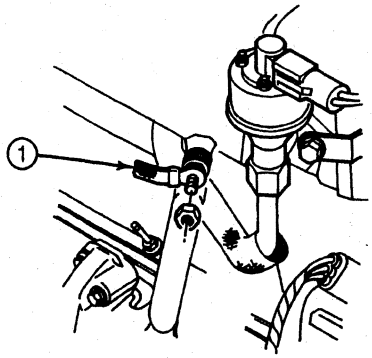

5.8L RH SIDE OF ENGINE

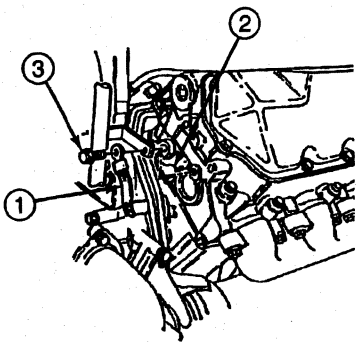

7.3L DIESEL

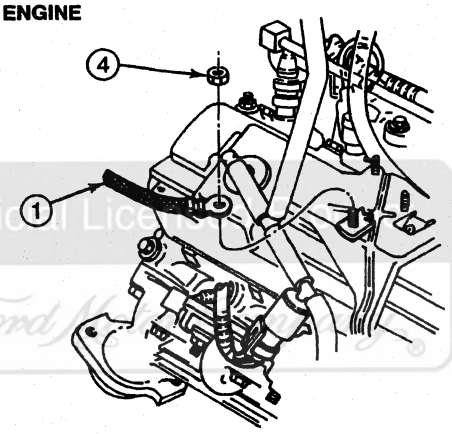

7.5L RH SIDE OF ENGINE

DK0321-A

Item	Part Number	Description
1	19A095	Radio Frequency Interference Suppression Bond
2	6049	Cylinder Head , RH Rear

(Continued)

Item	Part Number	Description
3	N605799-S36	Bolt
4	—	Nut

Radio Amplifier

Location of the amplifier is behind the radio, mounted to a bracket on the instrument panel (04320).

Removal

1. Disconnect radio amplifier wire harness.
2. Remove two radio amplifier retaining screws.
3. Slide amplifier slightly away from instrument panel bracket (to disengage the upper tab to instrument panel bracket) and then down to remove.

Installation

1. Follow removal procedure in reverse order.

SPECIFICATIONS

TORQUE SPECIFICATIONS

Description	N·m	Lb-In
Radio Frequency Interference Suppression Bond-to-Dash Panel Screw	7-9	62-80
Strap Assembly-to-Hood Screw	7-9	62-80

SPECIAL SERVICE TOOLS/EQUIPMENT

SPECIAL SERVICE TOOLS REQUIRED

Tool Number/ Description	Illustration
T87P-19061-A Radio Removing Tool	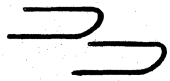 T87P-19061-A

Official Licensed Product
Ford Motor Company

SECTION 15-02 Antenna

SUBJECT	PAGE
VEHICLE APPLICATION	15-02-1
DESCRIPTION AND OPERATION	
Antenna	15-02-1
Poor Reception	15-02-1
DIAGNOSIS AND TESTING	
Antenna	15-02-1
REMOVAL AND INSTALLATION	
Antenna, Fixed, and Radio Antenna Lead-In Cable	15-02-1
SPECIFICATIONS	15-02-3

VEHICLE APPLICATION

F-250 Heavy Duty, F-350 and F-Super Duty

DESCRIPTION AND OPERATION

Antenna

The metallic mast is body-mounted, detachable, and is used for receiving AM and FM radio waves.

Official Licensed Product

Poor Reception

NOTE: Many customers do not understand the limitations of FM reception. Refer the customer to the owner guide for information about the limitations of FM radio performance.

If AM reception is extremely poor and FM reception drifts or appears to have trouble holding stations, make sure the antenna and antenna connectors are properly mated. If the antenna connectors are properly mated but the reception is still poor, refer to Section 15-00 for diagnosis and testing procedures.

If only FM reception is poor, it is unlikely that the antenna is at fault. Remove the radio chassis (18806) for service.

DIAGNOSIS AND TESTING

Antenna

Refer to Section 15-00.

REMOVAL AND INSTALLATION

Antenna, Fixed, and Radio Antenna Lead-In Cable

Removal

1. Remove the radio chassis (18806) from the instrument panel (04320).
2. Disconnect the radio antenna lead in cable (18812) from the radio chassis.
3. Remove the radio antenna lead in cable from the retaining clips along the bottom of the instrument panel.
4. Remove the antenna mast from the antenna base.
5. **CAUTION: Use appropriate fender protection to avoid damaging paint when removing antenna base.**

   Unsnap the radio antenna base cap (18A927) from the antenna base and remove the radio antenna base cap.
6. Remove four antenna base retaining screws and remove the antenna base and radio antenna base gasket (18946).
7. The radio antenna lead in cable can now be disconnected from the antenna base.

REMOVAL AND INSTALLATION (Continued)

Installation

1. Insert the radio antenna lead in cable from the passenger compartment into the antenna hole in the cowl top extension (020A10) and cowl top vent panel (022A68)
2. From outside of the vehicle, pull the cable through the hole in the cowl top extension until the grommet on the cable is properly seated.
3. Attach the radio antenna lead in cable to the base and radio antenna base gasket assembly through the hole on the cowl top extension. Seat the assembly on the hole pattern.
4. Install the four antenna base retaining screws.
5. Place the radio antenna base cap in position over the antenna base and snap the radio antenna base cap onto the base.
6. Install the radio antenna mast (18A886) to the radio antenna base.
7. Route the radio antenna lead in cable to the retainers on the bottom of the instrument panel.
8. Connect the radio antenna lead in cable to the radio chassis and check the operation of the radio chassis.
9. Install the radio chassis in the instrument panel. Refer to Section 15-01.

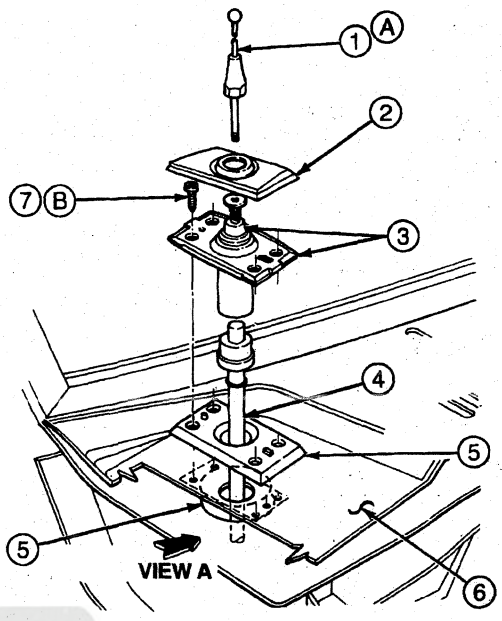

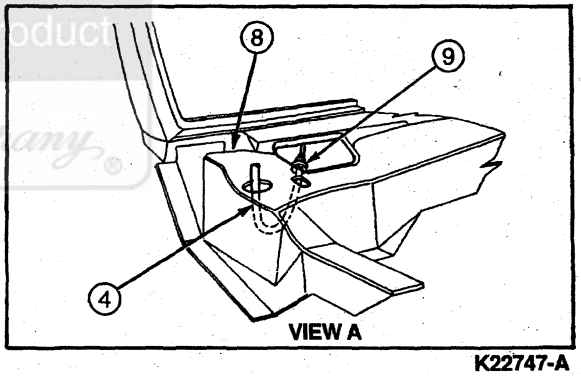

K22747-A

Item	Part Number	Description
1	18A886	Radio Antenna Mast
2	18A927	Radio Antenna Base Cap
3	19A192	Radio Antenna Base
4	18812	Radio Antenna Lead In Cable
5	18946	Radio Antenna Base Gasket
6	022A68	Cowl Top Vent Panel
7	N610019-S36	Screw (4 Req'd)
8	020A10	Cowl Top Extension
9	—	Grommet (Part of 18812 Cable Assy)
A	—	Tighten to 3.4-3.6 N·m (30-32 Lb-In)
B	—	Tighten to 1.8-2.6 N·m (16-23 Lb-In)

Official Licensed Product
Ford Motor Company

SPECIFICATIONS

TORQUE SPECIFICATIONS

Description	N·m	Lb-Ft
Radio Antenna Mast	3.4-3.6	30-32
Screw, Antenna Base	1.8-2.6	16-23

Official Licensed Product
Ford Motor Company

SECTION 15-03 Speakers

SUBJECT	PAGE
VEHICLE APPLICATION	15-03-1
DESCRIPTION AND OPERATION	
Radio Speakers	15-03-1
DIAGNOSIS AND TESTING	
Radio Speakers	15-03-1
REMOVAL AND INSTALLATION	
Radio Speakers, Front Door	15-03-1
Radio Speakers, Rear	15-03-2
SPECIFICATIONS	15-03-3

VEHICLE APPLICATION

F-250 Heavy Duty, F-350 and F-Super Duty

DESCRIPTION AND OPERATION

Radio Speakers

F-Series vehicles are equipped with two door speakers with AM radio and two additional rear speakers with stereo radios. All are premium speakers.

Official Licensed Product
Ford Motor Company

DIAGNOSIS AND TESTING

Radio Speakers

Refer to Section 15-00.

REMOVAL AND INSTALLATION

Radio Speakers, Front Door

Removal

1. Remove door trim panel. Refer to Section 01-05.
2. Remove four speaker screws and disconnect front window regulator wiring (14630) speaker connector.

Installation

1. Connect front window regulator wiring speaker connector and install four speaker screws.
2. Install dool trim panel. Refer to Section 01-05.

REMOVAL AND INSTALLATION (Continued)

Radio Speakers, Front Door

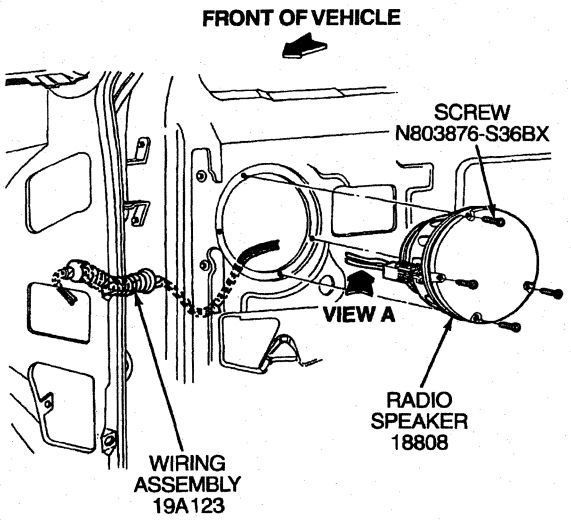

RIGHT HAND SHOWN
LH SYMMETRICALLY OPPOSITE

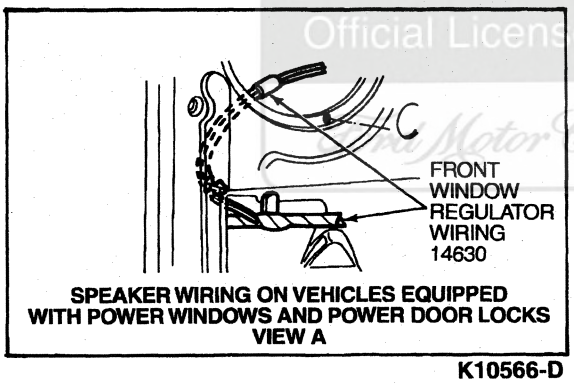

SPEAKER WIRING ON VEHICLES EQUIPPED WITH POWER WINDOWS AND POWER DOOR LOCKS VIEW A

K10566-D

Radio Speakers, Rear

Removal

1. NOTE: For SuperCab vehicles, the speaker trim cover must be removed to gain access to the four speaker screws.

   Remove four speaker screws and body side trim panel grille (Regular Cab and Crew Cab vehicles).
2. Remove the radio speaker (18808) and radio speaker grille (18978), and disconnect the wiring connector at the rear of the radio speaker.

Installation

1. Connect the wiring connector at the rear of the radio speaker. Install the radio speaker and radio speaker grille.
2. Install the four speaker screws and body side trim panel grille (regulator cab and crew cab vehicles).
3. Tighten the speaker screws to 2.0-2.5 N·m (17-22 lb-in).

Rear Radio Speaker, Regular Cab and Crew Cab

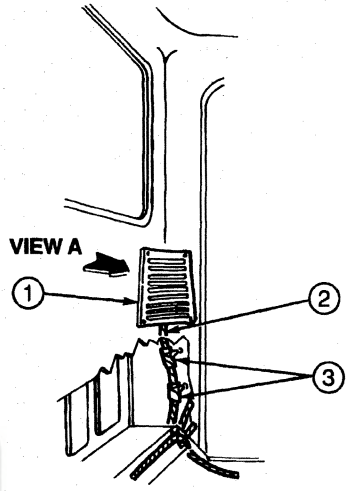

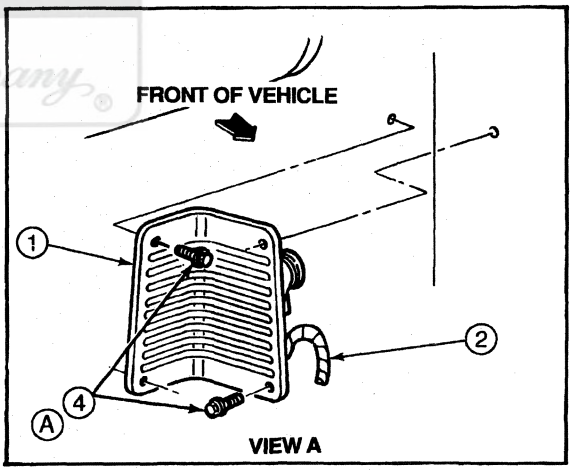

K16772-D

Item	Part Number	Description
1	18978	Radio Speaker Grille
2	14A504	Wiring Assy
3	—	Locator (Part of 14A504)
4	N803247-S58	Screw
A	—	Tighten to 2.0-2.5 N·m (17-22 Lb-In)

Official Licensed Product
Ford Motor Company

REMOVAL AND INSTALLATION (Continued)

Rear Radio Speaker, SuperCab

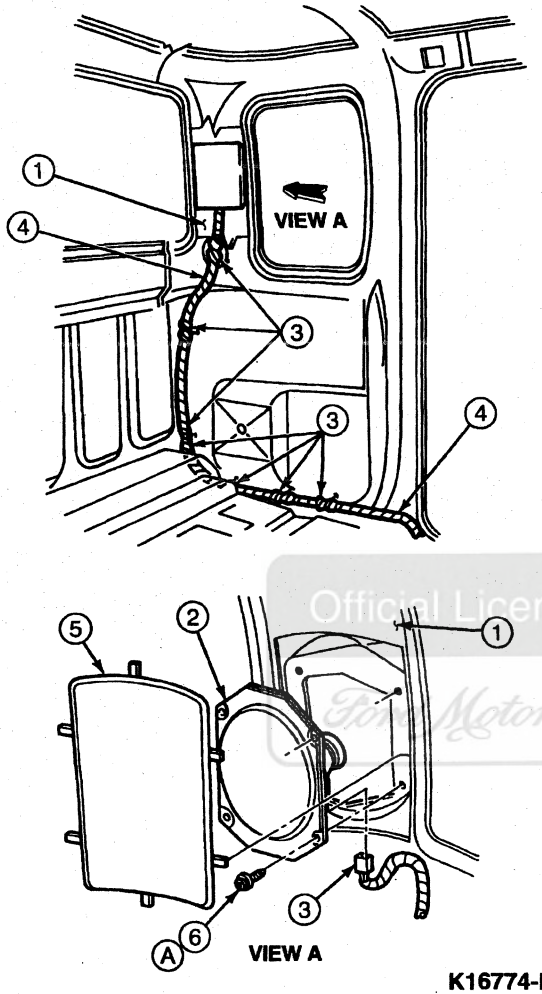

K16774-B

Item	Part Number	Description
1	31011	Trim Panel
2	18808	Radio Speaker

(Continued)

Item	Part Number	Description
3	—	Locator (Part of 14A504)
4	14A504	Wiring Assy
5	18978	Radio Speaker Grille
6	N806222-S36	Screw
A	—	Tighten to 2.0-2.5 N·m (17-22 Lb-In)

SPECIFICATIONS

TORQUE SPECIFICATIONS

Description	N·m	Lb-In
Screw	2.0-2.5	17-22

Official Licensed Product
Ford Motor Company

GROUP

LIGHTING 17

SECTION TITLE	PAGE
LAMPS, DAYTIME RUNNING	17-04-1
LIGHTING, EXTERIOR	17-01-1
LIGHTING, INTERIOR	17-02-1

SECTION 17-01 Lighting, Exterior

SUBJECT	PAGE
VEHICLE APPLICATION	17-01-2
DESCRIPTION AND OPERATION	
Hazard Flasher Switch	17-01-4
Headlamp Switch	17-01-2
Headlamps On Warning Buzzer/Chime	17-01-2
Light Switch Rheostat Resistor	17-01-2
Headlamps	17-01-2
Aerodynamic	17-01-2
Daytime Running Lamps	17-01-2
Indicator Flasher	17-01-4
Lamp and Switch, Fog	17-01-2
Lamp, Cargo	17-01-4
Lamps, Backup	17-01-4
Lamps, License	17-01-4
Lamps, Parking, Tail and Marker	17-01-3
Lamps, Roof Marker	17-01-4
Stoplamp, Hi-Mount	17-01-3
Stoplamps	17-01-3
Stoplight Switch	17-01-3
Trailer Towing Package Wiring	17-01-4
Turn Signal and Hazard Lamps	17-01-4
DIAGNOSIS AND TESTING	
Backup Lamps	17-01-20
Component Tests	17-01-22
Transmission Range (TR) Sensor/Switch	17-01-22
Inspection and Verification	17-01-20
Pinpoint Tests	17-01-21
Symptom Chart	17-01-20
Electrical Schematic Reference(s)	17-01-5
Headlamps	17-01-5
Component Tests	17-01-9
Headlamp Switch	17-01-9
Headlamps ON Warning Chime/Buzzer	17-01-9
Inspection and Verification	17-01-5
Pinpoint Tests	17-01-6
Symptom Chart	17-01-5
Parking Lamps	17-01-17
Inspection and Verification	17-01-17
Pinpoint Tests	17-01-18
Symptom Chart	17-01-17
Stoplamps	17-01-9
Inspection and Verification	17-01-9
Pinpoint Tests	17-01-10
DIAGNOSIS AND TESTING (Cont'd.)	
Symptom Chart	17-01-9
Trailer Towing Package Wiring	17-01-23
Inspection and Verification	17-01-23
Symptom Chart	17-01-23
Pinpoint Test	17-01-23
Turn Signal Lamps/Hazard Flasher Lamps	17-01-12
Component Tests	17-01-16
Hazard Flasher Lamp Switch	17-01-17
Turn Signal/Windshield Wiper Switch	17-01-16
Inspection and Verification	17-01-12
Pinpoint Tests	17-01-12
Symptom Chart	17-01-12
REMOVAL AND INSTALLATION	
Bulb, High Beam Indicator	17-01-37
Headlamp Assembly	17-01-29
Headlamp Bulb	17-01-27
Headlamp Switch	17-01-25
Lamp Assembly, Cargo (Exterior)	17-01-37
Lamp Assembly, Cargo, F-250 Heavy Duty, F-350, F-Super Duty Regular Cab and Crew Cab	17-01-37
Lamp Housing	17-01-33
Lamp Switch, Backup, 5-Speed Manual Overdrive Transmission	17-01-27
Lamp, License Plate, F-250 Heavy Duty, F-350 with Rear Bumper	17-01-34
Lamp Assembly	17-01-34
Lamp, License Plate, F-250 Heavy Duty, F-350 Without Rear Bumper	17-01-35
Bulb, Styleside Only	17-01-35
Lamp, License Plate, Lamp Socket	17-01-34
Lamp, Rear Hi-Mount	17-01-36
Lamp Assembly	17-01-36
Socket	17-01-37
Lamps Parking/Turn Signal/Side Marker	17-01-33
Lamps, Parking, Front Lamp	17-01-30
Lamp Assembly	17-01-30
Lamps, Parking, Rear Lamp, F-250 Heavy Duty, F-350 4x2 and F-Super Duty Chassis Cab	17-01-31

SECTION 17-01 Lighting, Exterior

SUBJECT	PAGE
REMOVAL AND INSTALLATION (Cont'd.)	
Lamps, Parking, Rear Lamp, F-250 Heavy Duty, F-350 Styleside Pickup	17-01-31
Exterior Lamp Bulb Socket	17-01-31
Lamp Assembly	17-01-31
Lamps, Roof Marker	17-01-35
Lamps, Side Marker, Rear Lamp, F-350 Styleside With Dual Rear Wheels	17-01-33
Lamp Assembly	17-01-33
Multi-Function Switch	17-01-27
Stoplight Switch	17-01-26
Trailer Towing Package Wiring	17-01-37
ADJUSTMENTS	
Headlamp	17-01-39
SPECIFICATIONS	17-01-40
SPECIAL SERVICE TOOLS/EQUIPMENT	17-01-40

VEHICLE APPLICATION

F-250 Heavy Duty, F-350 and F-Super Duty

DESCRIPTION AND OPERATION

Headlamps

Aerodynamic

Two aerodynamically styled headlamps (13008) are used. Each lamp uses a halogen headlamp bulb (13007). A burned-out headlamp bulb can be replaced without removing the headlamp. Headlamps are controlled by the headlamp switch (11654) on the instrument panel (04320).

Daytime Running Lamps

The daytime running lamp (DRL) system is designed to turn the high beam headlamps on, with a reduced light output, and without illuminating the high beam indicator lamp in the instrument panel.

Refer to Section 17-04 for further description and operation.

Headlamp Switch

The headlamp switch (11654) is a combination, three-position switch that controls the circuits to the headlamps (13008), exterior lamps (except stoplamps and turn signal/hazard warning lamps), instrument panel lamps and other miniature bulbs (13466). A typical headlamp switch is shown below. Circuits are connected to the headlamp switch by a molded connector.

Headlamps On Warning Buzzer/Chime

The headlamps on warning buzzer/chime module produces a repetitive chime or steady buzzing sound when the headlamp switch knob and shaft (11661) is left in the PARK or HEAD position and the driver door is opened.

Refer to Section 13-09 for further description and operation.

Light Switch Rheostat Resistor

The light switch rheostat resistor (11691) is part of the headlamp switch. Rotate the headlamp switch knob and shaft clockwise to dim the instrument panel illumination.

To turn on the dome lamp, rotate the headlamp switch knob and shaft fully counterclockwise.

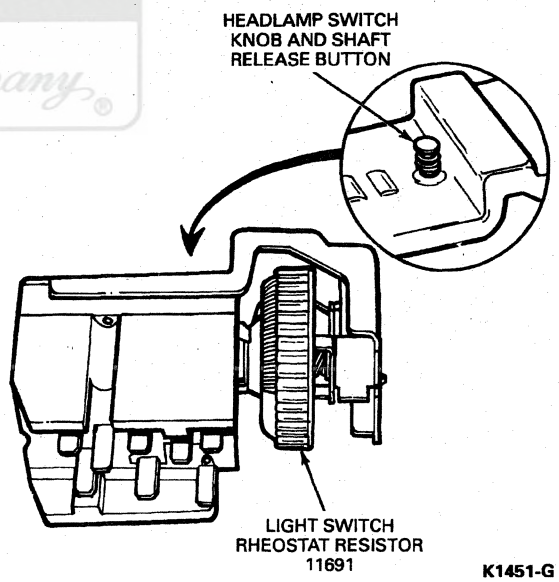

Lamp and Switch, Fog

The fog lamp assembly is mounted in the front valance panel. The lamp circuit is controlled by a push-button fog lamp switch (15A214) on the instrument panel (04320). The fog lamps can only be operated with the headlamp switch (11654) in the low beam position.

DESCRIPTION AND OPERATION (Continued)

Stoplight Switch

The electromechanical stoplight switch, installed on the pin of the brake pedal arm, straddles the push rod of the power brake booster (2005) but is not attached directly to the push rod. The F-Series motorhome uses a pushpin style stoplight switch. The stoplight switch is located near the brake pedal arm. The stoplight switch moves with the pedal arm when the brake pedal (2455) is depressed.

The stoplight switch actuating pin is held by spring pressure against the rear end of the power brake booster. Because of the slight clearance between the eye of the push rod of the power brake booster and the brake pedal arm pin, the pin and the stoplight switch move forward slightly before the push rod moves when the brake pedal is depressed. This relative movement between the stoplight switch and the end of the push rod moves the actuating pin rearward in the stoplight switch, closing contacts on the stoplight switch completing the circuit to the rear lamps (13405).

When the brake pedal is released, the stoplight switch moves rearward in relation to the push rod. The spring in the stoplight switch returns the actuating pin to its normal position, opening contacts on stoplight switch and interrupting the circuit to the rear lamps.

Stoplight Switch

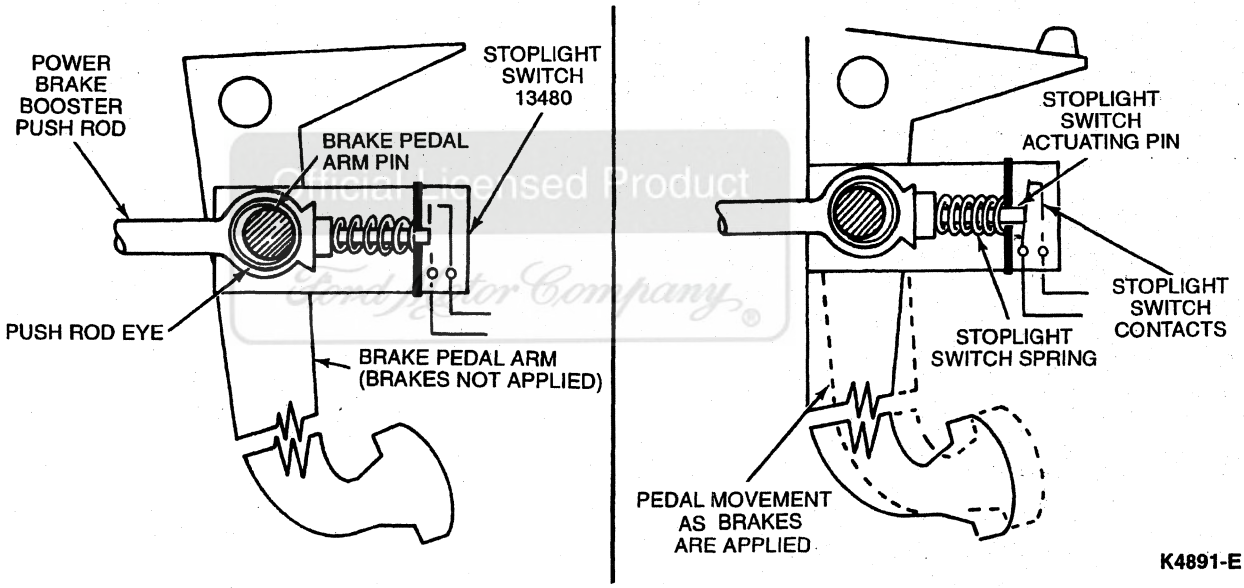

Lamps, Parking, Tail and Marker

The headlamp switch (11654) controls the circuits for the:

- parking lamps.
- tail lamps.
- marker lamps.
- headlamps.

When the headlamp switch is pulled to the first detent, it activates the:

- parking lamps.
- side marker lamps.
- rear lamps.
- instrument panel illumination lamps.

When the headlamp switch is pulled out to the second detent, the lamps activated by pulling the headlamp switch out to the first detent remain on and the headlamps (13008) are activated.

Stoplamps

Stoplamps are mounted in the same housing as the rear parking lamps.

- The stoplamps respond to indicate brake activation.

Stoplamp, Hi-Mount

The hi-mount stoplamp is mounted in the top center of the exterior rear cab area.

DESCRIPTION AND OPERATION (Continued)

Lamp, Cargo

The cargo lamp is located within the hi-mount stoplamp outside at the rear of the cab. It provides illumination to the storage compartment.

Lamps, License

F-Series pickup vehicles contain one license lamp with the standard bumper and two license lamps on vehicles equipped with the rear step bumper.

F-Series Chassis Cab vehicles contain an integral left rear tail lamp / license lamp. The license lamp projects the light to the license plate through a clear plastic housing.

Lamps, Backup

The backup lamps are mounted within the taillight housings and are intended to provide illumination behind the vehicle during reverse gear operations.

NOTE: The lamps have clear white lenses and should contain only clear white bulbs.

Lamps, Roof Marker

Five clearance / identification roof marker lamps are available on F-Series pickup and F-Series chassis cab vehicles.

Turn Signal and Hazard Lamps

Turn signal and hazard lamps are located outboard of the headlamps. The lenses for these are clear white on the front and clear red on the rear of the vehicle.

- Turn signal bulbs for the front of the vehicle are clear yellow.
- Turn signal bulbs for the rear of the vehicle are clear white.

Hazard Flasher Switch

The turn indicator / hazard flasher switch is located in the upper steering column hub. The turn signal is operated by the multi-function switch (13K359) on the left side of the hub. The hazard warning flasher switch (13A350) is located on the right side of the hub. Two flasher units are used, one for the turn indicator circuit and the other for the hazard flasher circuit.

To operate the turn indicators, the ignition switch lock cylinder (11582) must be in the RUN position on the F-250 Heavy Duty, F-350 and F-Super Duty Chassis Cab. The hazard system is operated independently of the ignition switch lock cylinder by actuating the hazard warning switch.

On F-Series Motorhome Chassis, an electronic flasher is used to control both the turn indicator and hazard warning. The electronic flasher is located on the left side of steering column support.

Indicator Flasher

This vehicle uses a thermo-electric indicator flasher (13350).

- The indicator flasher is located in the instrument panel fuse panel, behind the instrument panel trim plate located to the left of the steering wheel.

F-250 Heavy Duty, F-350 and F-Super Duty

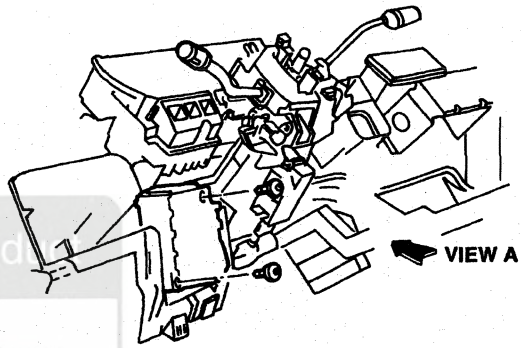

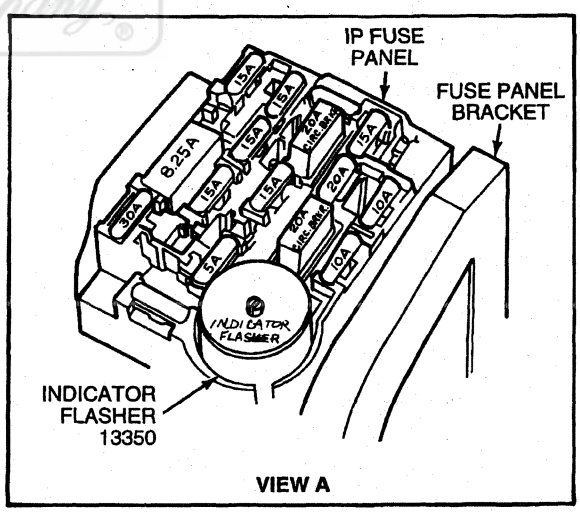

K17688-D

Trailer Towing Package Wiring

Vehicles equipped with the trailer towing package have the following additions to support the trailer wiring:

- A set of relays in the engine compartment and connector on the rear lamp wiring (14405), located in the rear bumper area.
- Trailer feed wiring (13A576) is supplied with the vehicle and installed at the time of pre-delivery.

Official Licensed Product Ford Motor Company

DESCRIPTION AND OPERATION (Continued)

- Vehicles are equipped with a wiring feed, located under the instrument panel (04320), for a trailer brake control unit.

DIAGNOSIS AND TESTING

Electrical Schematic Reference(s)

Refer to Electrical and Vacuum Troubleshooting Manual, Cell 85, Headlamps for schematic and connector information.

Refer to Electrical and Vacuum Troubleshooting Manual, Cell 90, Turn / Stop / Hazard Lamps for schematic and connector information.

Refer to Electrical and Vacuum Troubleshooting Manual, Cell 92, Exterior Lamps for schematic and connector information.

Refer to Electrical and Vacuum Troubleshooting Manual, Cell 93, Backup Lamps for schematic and connector information.

Refer to Electrical and Vacuum Troubleshooting Manual, Cell 95, Trailer / Camper Adapter for schematic and connector information.

Headlamps

Inspection and Verification

1. Verify the vehicle owner's original concern by operating the headlamps to duplicate the condition.
2. Inspect to determine if one of the following electrical concerns apply:

VISUAL INSPECTION CHART

Electrical
• Circuitry open / shorted • Connectors damaged • Bulb burned out • Damaged headlamp switch • Blown fuse

3. If the concern(s) remains after the inspection, determine the symptom(s) and proceed to the following symptom chart.

Symptom Chart

Refer to the Electrical and Vacuum Troubleshooting Manual for the connector numbers in the pinpoint tests.

NOTE: Use Rotunda 73 Digital Multimeter 105-R0051 or equivalent when performing electrical pinpoint tests.

HEADLAMPS

Condition	Possible Source	Action
• Headlamps Inoperative	• Circuitry open / shorted. • Damaged headlamp switch. • Blown fuse.	• GO to Pinpoint Test A.
• Headlamps On Continuously	• Circuitry open / shorted. • Damaged headlamp switch.	• GO to Pinpoint Test B.
• High Beams or Low Beams Inoperative	• Circuitry open / shorted. • Damaged multi-function switch.	• GO to Pinpoint Test C.
• One High Beam or One Low Beam Headlamp Inoperative	• Circuitry open / shorted. • Damaged connector. • Headlamp bulb damaged.	• GO to Pinpoint Test D.
• Flash-to-Pass Inoperative	• Blown fuse. • Circuitry open / shorted. • Damaged multi-function switch.	• GO to Pinpoint Test E.

Official Licensed Product Ford Motor Company

DIAGNOSIS AND TESTING (Continued)

Pinpoint Tests

PINPOINT TEST A: HEADLAMPS INOPERATIVE

	Test Step	Result ▶	Action to Take
A1	CHECK SUPPLY VOLTAGE AT HEADLAMP SWITCH • Gain access to the headlamp switch connector C273. • Using a voltmeter connected to a known good ground, check for battery voltage at Pin B1 of headlamp switch. • **Is battery voltage present?**	Yes ▶ No ▶	GO to **A4**. GO to **A2**.
A2	CHECK HEADLAMP FUSE • Using a Rotunda 73 Digital Multimeter, check output voltage at power distribution box Fuse 19 (40A). • **Is battery voltage present?**	Yes ▶ No ▶	GO to **A3**. SERVICE Fuse 19 (40A) feed wiring or REPLACE Fuse 19 (40A). RESTORE vehicle. RETEST system.
A3	CHECK CIRCUIT 38 (BK/O) • Using a voltmeter, check for battery voltage on Circuit 38 (BK/O) at Fuse 19 (40A) and at headlamp switch. • **Is battery voltage present?**	Yes ▶ No ▶	GO to **A4**. REPLACE damaged power distribution box Fuse 19 (40A). RESTORE vehicle. RETEST system.
A4	CHECK HEADLAMP SWITCH OUTPUT • Actuate the headlamp switch to the HEAD position. • Using Rotunda 73 Digital Multimeter 105-R0051 or equivalent connected to a known good ground, check Pin H, Circuit 15 (R/Y) at headlamp switch for voltage. • **Is battery voltage present?**	Yes ▶ No ▶	GO to **A5**. REPLACE damaged headlamp switch. RESTORE vehicle. RETEST system.
A5	CHECK HEADLAMP INPUT TO MULTI-FUNCTION SWITCH • Headlamp switch still in the HEAD position. • Gain access to the multi-function switch connector C230. • Using Rotunda 73 Digital Multimeter connected to a known good ground, check Pin 2, Circuit 15 (R/Y) at multi-function switch. • **Is battery voltage present?**	Yes ▶ No ▶	GO to **A6**. SERVICE Circuit 15 (R/Y) for an open circuit. RESTORE vehicle. RETEST system.
A6	CHECK MULTI-FUNCTION SWITCH LOW BEAM • Headlamps in LO beam position. • With Rotunda 73 Digital Multimeter still connected to a known good ground, check Pin 3, Circuit 13 (R/BK) at multi-function switch connector C230 for battery voltage. • **Is battery voltage present?**	Yes ▶ No ▶	GO to **A7**. REPLACE damaged multi-function switch. RESTORE vehicle. RETEST system.
A7	CHECK MULTI-FUNCTION SWITCH HIGH BEAM • Headlamps in HI beam position. • Rotunda 73 Digital Multimeter 105-R0051 or equivalent still connected to a known good ground, check Pin 5, Circuit 12 (LG/BK) at multi-function switch connector C230 for battery voltage. • **Is battery voltage present?**	Yes ▶ No ▶	GO to **A8**. REPLACE damaged multi-function switch. RESTORE vehicle. RETEST system.

Ford Motor Company Proprietary Product

DIAGNOSIS AND TESTING (Continued)

PINPOINT TEST A: HEADLAMPS INOPERATIVE (Continued)

Test Step		Result ▶	Action to Take
A8	CHECK SUPPLY TO SUSPECT HEADLAMP		
	• Gain access to the suspect headlamp connector C1033 or C1034. Disconnect the suspect headlamp connector C1033 or C1034. • Actuate headlamp switch to the HEAD position. • Using Rotunda 73 Digital Multimeter connected to a known good ground, connect other end to Circuit 13 (R/BK) for low beam test and Circuit 12 (LB/BK) for high beam test. Check for voltage with multi-function switch in LO beam or HI beam position. • **Is battery voltage present?**	Yes ▶ No ▶	GO to **A9**. SERVICE Circuit 13 (R/BK) or Circuit 12 (LG/BK) for open circuit. RESTORE vehicle. RETEST system.
A9	CHECK SUSPECT HEADLAMP GROUND		
	• Using Rotunda 73 Digital Multimeter 105-R0051 or equivalent connected to a known good ground, connect second lead to Circuit 57 (BK) at headlamp connector C1033 or C1034. • Measure resistance. • **Is resistance 5 ohms or less?**	Yes ▶ No ▶	REPLACE damaged headlamp bulb. RESTORE vehicle. RETEST system. SERVICE Circuit 57 (BK) for open circuit. RESTORE vehicle. RETEST system.

PINPOINT TEST B: HEADLAMPS ON CONTINUOUSLY

Test Step		Result ▶	Action to Take
B1	CHECK HEADLAMP SWITCH		
	• With headlamp switch in the OFF position, use Rotunda 73 Digital Multimeter 105-R0051 or equivalent to check for voltage at Pin H of the headlamp switch. • **Is battery voltage present at Pin H?**	Yes ▶ No ▶	REPLACE headlamp switch. RESTORE vehicle. RETEST system. GO to **B2**.
B2	CHECK MULTI-FUNCTION SWITCH		
	• With headlamp switch in the OFF position, check for voltage at Circuit 12 (LG/BK) and Circuit 13 (R/BK) on the multi-function switch. • **Is battery voltage present?**	Yes ▶ No ▶	REPLACE multi-function switch. RESTORE vehicle. RETEST system. GO to **B1**.

PINPOINT TEST C: HIGH BEAMS OR LOW BEAMS INOPERATIVE

Test Step		Result ▶	Action to Take
C1	CHECK HEADLAMP SWITCH		
	• Perform the headlamp switch component test. Refer to Component Tests, Headlamp Switch in this section. • **Did the headlamp switch test OK?**	Yes ▶ No ▶	GO to **C2** for high beam failure. GO to **C4** for low beam failure. REPLACE headlamp switch. RETEST system.
C2	HIGH BEAMS INOPERATIVE		
	• With headlamp switch in the OFF position, use Rotunda 73 Digital Multimeter 105-R0051 or equivalent to check Circuit 12 (LG/BK) at the left and the right headlamp connectors C1033 and C1034 to Circuit 12 (LG/BK) at the multi-function switch. • **Is continuity present in Circuit 12 (LG/BK)?**	Yes ▶ No ▶	GO to **C3**. SERVICE open in Circuit 12 (LG/BK). RESTORE vehicle. RETEST system.
C3	CHECK CIRCUIT 57 (BK)		
	• With headlamp switch in the OFF position, use Rotunda 73 Digital Multimeter 105-R0051 or equivalent to check Circuit 57 (BK) from ground to the headlamp connectors C1033 and C1034. • **Is continuity present in Circuit 57 (BK)?**	Yes ▶ No ▶	REPLACE headlamp bulb. RESTORE vehicle. RETEST system. SERVICE ground circuit. RESTORE vehicle. RETEST system.

Ford Motor Company Authorized Licensed Product

DIAGNOSIS AND TESTING (Continued)

PINPOINT TEST C: HIGH BEAMS OR LOW BEAMS INOPERATIVE (Continued)

Test Step		Result ▶	Action to Take
C4	LOW BEAMS INOPERATIVE		
	• With headlamp switch in the OFF position, use Rotunda 73 Digital Multimeter 105-R0051 or equivalent to check Circuit 13 (R/BK) at the left and the right headlamp connectors C1033 and C1034 to Circuit 13 (R/BK) at the multi-function switch. • **Is continuity present?**	Yes ▶ No ▶	GO to **C5**. SERVICE open in Circuit 13 (R/BK). RESTORE vehicle. RETEST system.
C5	CHECK GROUND CIRCUIT 57 (BK)		
	• With headlamp switch in OFF position, use Rotunda 73 Digital Multimeter 105-R0051 or equivalent to check Circuit 57 (BK) from the ground to the headlamp connectors C1033 and C1034. • **Is continuity present?**	Yes ▶ No ▶	REPLACE headlamp bulb. RESTORE vehicle. RETEST system. SERVICE ground circuit. RESTORE vehicle. RETEST system.

PINPOINT TEST D: ONE HIGH BEAM OR ONE LOW BEAM HEADLAMP INOPERATIVE

Test Step		Result ▶	Action to Take
D1	CHECK FOR POWER TO INOPERATIVE HEADLAMP		
	• Disconnect connector to inoperative headlamp. • Headlamp switch in the HEAD position. • For high beams inoperative: — High beams on. — Measure the voltage on Circuit 12 (LG/BK) at the headlamp connector C1033 or C1034. • For low beams inoperative: — Low beams on. — Measure the voltage on Circuit 13 (R/BK) at the headlamp connector C1033 or C1034. • **Is the voltage greater than 10 volts?**	Yes ▶ No ▶	GO to **D2**. SERVICE Circuit 12 (LG/BK) or Circuit 13 (R/BK) for open in the high beams or low beams. RESTORE vehicle. RETEST system.
D2	CHECK SUSPECT HEADLAMP GROUND		
	• Using Rotunda 73 Digital Multimeter 105-R0051 or equivalent connected to a known good ground, connect second lead to Circuit 57 (BK) at headlamp connector C1033 or C1034. • Measure resistance. • **Is resistance 5 ohms or less?**	Yes ▶ No ▶	REPLACE damaged headlamp bulb. RESTORE vehicle. RETEST system. SERVICE Circuit 57 (BK) for open circuit. RESTORE vehicle. RETEST system.

PINPOINT TEST E: FLASH-TO-PASS INOPERATIVE

Test Step		Result ▶	Action to Take
E1	CHECK FUSE		
	• Check power distribution box Fuse 3 (30A). • **Is the fuse blown?**	Yes ▶ No ▶	REPLACE Fuse 3 (30A). GO to **E2**. GO to **E2**.
E2	CHECK CIRCUIT 38 (BK/O)		
	• Remove Fuse 3 (30A). • Using Rotunda 73 Digital Multimeter 105-R0051 or equivalent, check continuity on Circuit 38 (BK/O) from power distribution box to multi-function switch connector C230 at Circuit 196 (DB/O). • **Is continuity present?**	Yes ▶ No ▶	GO to **E3**. SERVICE open circuit between power distribution box and multi-function switch. REPLACE fuse. RESTORE vehicle. RETEST system.
E3	CHECK FLASH-TO-PASS SWITCH		
	• Remove Fuse 3 (30A). • With the flash-to-pass switch held in the ON position, use Rotunda 73 Digital Multimeter 105-R0051 or equivalent to measure continuity from Circuit 196 (DB/O) at the multi-function switch to Circuit 12 (LG/BK) of the multi-function switch. • **Is continuity present through the multi-function switch?**	Yes ▶ No ▶	Switch OK. GO to **C2**. REPLACE multi-function switch. RESTORE vehicle. RETEST system.

Special Licensed Product Motorcraft Company

DIAGNOSIS AND TESTING (Continued)

Component Tests

NOTE: Use Rotunda 73 Digital Multimeter 105-R0051 or equivalent when performing the following component test.

Headlamp Switch

The component connector must be removed before testing. To test a single circuit within the component, select that circuit under the column TO TEST. To test the complete component, perform all tests.

Connect the tester to the terminals shown in the second column and operate the component as shown in the third column.

To Test	Connect Self-Powered Test Lamp or Ohmmeter to Terminals	Move Switch to These Positions	A Good Switch Will Indicate
Headlamp Circuit	Pin B1, Circuit 38 (BK/O) and Pin H, Circuit 15 (R/Y)	**Off** **Park** **Head**	Open Circuit Open Circuit Closed Circuit
Park Lamp Circuit	Pin B2, Circuit 195 (T/W) and Pin R, Circuit 14 (BR)	**Off** **Park** **Head**	Open Circuit Closed Circuit Closed Circuit
Dome Light Circuit	Pin D1, Circuit 54 (LG/Y) and Pin D2, Circuit 55 (BK/PK) Pin D2, Circuit 706 (GY)	Knob rotated fully counterclockwise (In detent) Knob rotated fully clockwise (Out of detent)	Closed Circuit Open Circuit
Panel Light Dimmer Circuit	Pin R, Circuit 14 (BR) and Pin I, Circuit 294 (W/LB)	Knob rotated left from full clockwise position	Ohmmeter Will Show Smoothly Increasing Resistance to approx. 11 ohm max.
Ignition On, Lamps Off Circuit	Pin IGN, Circuit 137 (Y/BK) and Pin DN, Circuit 484 (O/BK)	**Off** **Park** **Head**	Closed Circuit Open Circuit Open Circuit
Cluster Dimmer Circuit	Pin I, Circuit 294 (W/LB) and Pin DN, Circuit 484 (O/BK)	**Off** **Park** **Head**	Open Circuit Closed Circuit Closed Circuit

Official Licensed Product

Headlamps ON Warning Chime/Buzzer

Refer to Section 13-09.

Stoplamps

Inspection and Verification

1. Verify the vehicle owner's original concern by operating the stoplamps to duplicate the condition.
2. Inspect to determine if one of the following electrical concerns apply.

VISUAL INSPECTION CHART

Electrical
• Circuitry open/shorted • Blown fuse • Damaged multi-function switch • Damaged stoplight switch • Damaged connectors

3. If the concern(s) remains after the inspection, determine the symptom(s) and proceed to the following symptom chart.

Symptom Chart

Refer to the Electrical and Vacuum Troubleshooting Manual for the connector numbers in the pinpoint tests.

DIAGNOSIS AND TESTING (Continued)

NOTE: Use Rotunda 73 Digital Multimeter 105-R0051 or equivalent when performing electrical pinpoint tests.

STOPLAMPS

Condition	Possible Source	Action
• Stoplamps/Hi-Mount Stoplamps Inoperative	• Circuitry open. • Blown fuse. • Damaged stoplight switch. • Damaged multi-function switch.	• GO to Pinpoint Test F.
• One or More Stoplamps Inoperative	• Open circuitry. • Burned out miniature bulb.	• GO to Pinpoint Test G.
• Stoplamps/Hi-Mount Stoplamps on Continuously	• Damaged switches.	• GO to Pinpoint Test H.

Pinpoint Tests

PINPOINT TEST F: STOPLAMPS/HI-MOUNT STOPLAMPS INOPERATIVE

Test Step		Result	Action to Take
F1	CHECK SUPPLY TO STOPLAMPS		
	• With Rotunda 73 Digital Multimeter 105-R0051 or equivalent connected to a known good ground, check for voltage on Circuit 10 (LG/R) at stoplight switch connector C279. • **Is battery voltage present?**	Yes ▶ No ▶	GO to **F4.** GO to **F2.**
F2	CHECK SUPPLY CIRCUIT TO STOPLIGHT SWITCH		
	• Using Rotunda 73 Digital Multimeter 105-R0051 or equivalent connected to a known good ground, check Circuit 383 (R/W)/10 (LG/R) at output side of I/P fuse panel Fuse 13 (15A). • **Is battery voltage present?**	Yes ▶ No ▶	REPLACE fuse or SERVICE Circuit 383 (R/W)/10 (LG/R) for open circuit. RESTORE vehicle. RETEST system. GO to **F3.**
F3	CHECK CIRCUIT 383 (R/W)/10 (LG/R) FOR SHORT		
	• Remove IP fuse panel Fuse 13 (15A). • Using Rotunda 73 Digital Multimeter 105-R0051 or equivalent connected to a known good ground, connect second lead to output side of IP fuse panel Fuse 13 (15A). • Measure resistance. • **Is resistance 5 ohms or less?**	Yes ▶ No ▶	SERVICE Circuit 383 (R/W)/10 (LG/R) for short to ground. RESTORE vehicle. RETEST system. REPLACE damaged fuse. RESTORE vehicle. RETEST system.
F4	CHECK STOPLIGHT SWITCH OUTPUT		
	• Depress stoplight switch and hold. • Using a voltmeter connected to a known good ground, check Circuit 511 (LG) at stoplight switch connector C279. • **Is battery voltage present?**	Yes ▶ No ▶	GO to **F5.** REPLACE damaged stoplight switch. RESTORE vehicle. RETEST system.
F5	CHECK STOPLIGHT SWITCH INPUT TO MULTI-FUNCTION SWITCH		
	• Gain access to the multi-function switch. With Rotunda 73 Digital Multimeter 105-R0051 or equivalent connected to a known good ground, connect other end to Pin 9, Circuit 511 (LG) at the multi-function switch connector C231. • Apply brake pedal, and hold. • **Is battery voltage present?**	Yes ▶ No ▶	GO to **F6.** SERVICE Circuit 511 (LG) for an open. RESTORE vehicle. RETEST system.

Official Licensed Product

DIAGNOSIS AND TESTING (Continued)

PINPOINT TEST F: STOPLAMPS/HI-MOUNT STOPLAMPS INOPERATIVE (Continued)

Test Step		Result ▶	Action to Take
F6	CHECK MULTI-FUNCTION SWITCH OUTPUT TO STOPLAMPS		
	• Using Rotunda 73 Digital Multimeter 105-R0051 or equivalent connected to a known good ground, and brake pedal still applied, check Circuit 9 (LG/O) at Pin 10 of multi-function switch connector C231, or Circuit 5 (O/LB) at Pin 2 of multi-function switch connector C231. • **Is battery voltage present?**	Yes ▶ No ▶	LEAVE brake pedal applied. GO to **F7**. REPLACE damaged multi-function switch. RESTORE vehicle. RETEST system.
F7	CHECK STOPLAMP SUPPLY AT BULB		
	• Gain access to either stoplamp connector C431 or C432. Disconnect stoplamp connector C431 or C432. • Using Rotunda 73 Digital Multimeter 105-R0051 or equivalent connected to a known good ground, check Circuit 9 (LG/O) and Circuit 5 (O/LB) for voltage. • **Is battery voltage present?**	Yes ▶ No ▶	GO to **F8**. SERVICE Circuit 9 (LG/O) or Circuit 5 (O/LB) for open circuit. RESTORE vehicle. RETEST system.
F8	CHECK STOPLAMPS GROUND		
	• Unapply brake pedal. • Using Rotunda 73 Digital Multimeter 105-R0051 or equivalent connected to a known good ground, connect second lead to Circuit 57 (BK) at either stoplamp bulb connector C431 or C432. • Measure resistance. • **Is resistance 5 ohms or less?**	Yes ▶ No ▶	REPLACE damaged miniature bulb. RESTORE vehicle. RETEST system. GO to **F9**. SERVICE Circuit 57 (BK) for open circuit. RESTORE vehicle. RETEST system.
F9	CHECK SUPPLY TO REAR HI-MOUNT LAMP		
	• Remove rear hi-mount lamp as outlined. • Connect one lead of a voltmeter to a known good ground, connect other end to Circuit 511 (LG) at hi-mount stoplamp connector C910. • Apply brake pedal. • **Did test lamp illuminate?**	Yes ▶ No ▶	RELEASE brake pedal. GO to **F10**. SERVICE Circuit 511 (LB) for open circuit. RESTORE vehicle. RETEST system.
F10	CHECK REAR HIGH-MOUNT LAMP GROUND		
	• Connect Rotunda 73 Digital Multimeter 105-R0051 or equivalent to a known good ground. Connect second lead to Circuit 57 (BK) at hi-mount stoplamp connector C910. • Measure resistance. • **Is resistance 5 ohms or less?**	Yes ▶ No ▶	REPLACE damaged stoplamp miniature bulb. RESTORE vehicle. RETEST system. SERVICE Circuit 57 (BK) for open circuit. RESTORE vehicle. RETEST system.

PINPOINT TEST G: ONE OR MORE STOPLAMPS INOPERATIVE

Test Step		Result ▶	Action to Take
G1	CHECK STOPLAMP SUPPLY AT BULB		
	• Gain access to either stoplamp connector C431 or C432. Disconnect stoplamp connector C431 or C432. • Using Rotunda 73 Digital Multimeter 105-R0051 or equivalent connected to a known good ground, check either Circuit 9 (LG/O) or Circuit 5 (O/LB) for voltage. • Apply brake pedal. • **Is battery voltage present?**	Yes ▶ No ▶	GO to **G2**. SERVICE Circuit 9 (LG/O) or Circuit 5 (O/LB) for open circuit. RESTORE vehicle. RETEST system.
G2	CHECK STOPLAMPS GROUND		
	• Using Rotunda 73 Digital Multimeter 105-R0051 or equivalent connected to a known good ground, connect second lead to Circuit 57 (BK) at either stoplamp bulb connector C431 or C432. • Measure resistance. • **Is resistance 5 ohms or less?**	Yes ▶ No ▶	REPLACE damaged miniature bulb. RESTORE vehicle. RETEST system. SERVICE Circuit 57 (BK) for open circuit. RESTORE vehicle. RETEST system.

Official Licensed Product

DIAGNOSIS AND TESTING (Continued)

PINPOINT TEST H: STOPLAMPS/HI-MOUNT STOPLAMPS ON CONTINUOUSLY

Test Step		Result ▶	Action to Take
H1	STOPLIGHT SWITCH CIRCUIT TEST		
	• With stoplight switch in the OFF position, use Rotunda 73 Digital Multimeter 105-R0051 or equivalent to measure voltage at the output side of the stoplight switch, with Circuit 511 (LG) disconnected at splice. • **Is battery voltage present?**	Yes ▶	REPLACE the stoplight switch. RESTORE vehicle. RETEST system.
		No ▶	SERVICE short to power at individual suspect lamp. RESTORE vehicle. RETEST system.

Turn Signal Lamps/Hazard Flasher Lamps

Inspection and Verification

1. Verify the vehicle owner's original concern by operating the turn signal/hazard flasher lamps to duplicate the condition.
2. Inspect to determine if one of the following electrical concerns apply:

VISUAL INSPECTION CHART

Electrical
• Circuitry open/shorted • Blown fuse • Damaged multi-function switch • Bulb burned out • Damaged indicator flasher

3. If the concern(s) remains after the inspection, determine the symptom(s) and proceed to the following symptom chart.

Symptom Chart

NOTE: Use Rotunda 73 Digital Multimeter 105-R0051 or equivalent when performing electrical pinpoint tests.

Official Licensed Product
Ford Motor Company

TURN SIGNAL LAMPS/HAZARD FLASHER LAMPS

Condition	Possible Source	Action
• All Turn Signal/Hazard Flasher Lamps Inoperative	• Open circuitry. • Damaged multi-function switch. • Damaged indicator flasher. • Blown fuse.	• GO to Pinpoint Test J.
• Individual Turn Signal/Flasher Lamp Inoperative	• Open circuitry. • Damaged multi-function switch. • Damaged indicator flasher.	• GO to Pinpoint Test K.
• Turn Signal Lamps On Continuously	• Short to power. • Damaged multi-function switch.	• GO to Pinpoint Test L.
• One Turn Signal Lamp Inoperative	• Damaged miniature bulb. • Damaged indicator flasher. • Open circuitry.	• GO to Pinpoint Test M.
• Hazard Flasher Inoperative	• Open circuitry. • Damaged indicator flasher.	• GO to Pinpoint Test N.
• Hazard Flashers On Continuously	• Short to power. • Damaged multi-function switch.	• GO to Pinpoint Test P.

Pinpoint Tests

PINPOINT TEST J: ALL TURN SIGNAL LAMPS/HAZARD FLASHER LAMPS INOPERATIVE

Test Step		Result ▶	Action to Take
J1	CHECK FUSES		
	• Check turn/hazard flasher Fuse 7 (15A) and Fuse 13 (15A) for continuity. • **Are fuses good?**	Yes ▶	GO to **J2**.
		No ▶	REPLACE bad fuse(s). RESTORE vehicle. RETEST system.

DIAGNOSIS AND TESTING (Continued)

PINPOINT TEST J: ALL TURN SIGNAL LAMPS/HAZARD FLASHER LAMPS INOPERATIVE (Continued)

Test Step		Result ▶	Action to Take
J2	CHECK VOLTAGE FEED SIDE FUSE 7 (15A)		
	• Key in RUN. • Check for voltage at turn flasher Fuse 7 (15A), Circuit 687 (GY/Y), feed side. • **Is battery voltage present?**	Yes ▶ No ▶	GO to **J3**. CHECK Circuit 687 (GY/Y) for continuity between ignition switch and IP fuse panel. REFER to Section 11-05 for testing of ignition switch.
J3	CHECK VOLTAGE FEED SIDE FUSE 13 (15A)		
	• Key off. • Check for voltage at hazard flasher Fuse 13 (15A), Circuit 38 (BK/O), feed side. • **Is battery voltage present?**	Yes ▶ No ▶	GO to **J5**. GO to **J4**.
J4	CHECK CONTINUITY OF CIRCUIT 38 (BK/O)		
	• Disconnect battery ground cable. • Check for continuity on Circuit 38 (BK/O) between IP fuse panel Fuse 13 (15A) and power distribution box Fuse 13. • **Is continuity present?**	Yes ▶ No ▶	CHECK Fuse 13 and feed wiring in power distribution box. RESTORE vehicle. RETEST system. SERVICE open in Circuit 38 (BK/O). RESTORE vehicle. RETEST system.
J5	CHECK TURN/HAZARD FLASHER FEEDS		
	• Disconnect battery ground cable. • Check continuity of Circuit 8 (O/Y) between IP fuse panel Fuse 7 (15A) and turn flasher, Circuit 383 (R/W) between IP fuse panel Fuse 13 (15A) and hazard flasher. • **Is continuity present?**	Yes ▶ No ▶	GO to **J6**. SERVICE open in noncontinuous circuit(s). RESTORE vehicle. RETEST system.
J6	CHECK INDICATOR FLASHER		
	• Reconnect battery ground cable. • Restore vehicle. • Substitute a known good indicator flasher. • **Do turn/hazard lamps perform correctly?**	Yes ▶ No ▶	RESTORE vehicle. Problem corrected. GO to **J7**.
J7	CHECK MULTI-FUNCTION SWITCH FEEDS		
	• Disconnect battery ground cable. • Check continuity of Circuit 44 (LB) between turn flasher and multi-function switch connector C231 Pin 1, Circuit 385 (R/W) between hazard flasher and multi-function switch connector C231 Pin 4. • **Is continuity present?**	Yes ▶ No ▶	GO to **J8**. SERVICE open in noncontinuous circuit(s). RESTORE vehicle. RETEST system.
J8	CHECK MULTI-FUNCTION SWITCH TURN CONTINUITY		
	• Disconnect battery ground cable. • Remove multi-function switch. Refer to Section 11-05 for removal procedure. • Actuate multi-function switch to the left and right turn positions and check continuity between Pin 1, Circuit 44 (LB) and: LEFT Pin 8, Circuit 3 (LG/W) Pin 10, Circuit 9 (LG/O) RIGHT Pin 5, Circuit 2 (W/LB) Pin 2, Circuit 5 (O/LB) • **Is continuity present in all cases?**	Yes ▶ No ▶	GO to **J9**. REPLACE damaged multi-function switch. REFER to Section 11-05. RESTORE vehicle. RETEST system.

Ford Motor Company Proprietary Product

DIAGNOSIS AND TESTING (Continued)

PINPOINT TEST J: ALL TURN SIGNAL LAMPS/HAZARD FLASHER LAMPS INOPERATIVE (Continued)

Test Step		Result ▶	Action to Take
J9	CHECK MULTI-FUNCTION SWITCH HAZARD CONTINUITY		
	• Disconnect battery ground cable. • Remove multi-function switch. Refer to Section 11-05 for removal procedure. • Actuate multi-function switch to the hazard position and check continuity between Pin 4, Circuit 385 (R/W) and: Pin 2, Circuit 5 (O/LB) Pin 10, Circuit 9 (LG/O) Pin 5, Circuit 2 (W/LB) Pin 8, Circuit 3 (LG/W) • **Is continuity present in all cases?**	Yes ▶ No ▶	GO to **J10**. REPLACE damaged multi-function switch. REFER to Section 11-05. RESTORE vehicle. RETEST system.
J10	CHECK LAMP FEED WIRING		
	• Disconnect battery ground cable. • Install multi-function switch. Refer to Section 11-05. • Check continuity between multi-function switch circuit feed specified and the corresponding exterior lamp: Circuit 3 (LG/W) Left Front Turn Lamp Circuit 2 (W/LB) Right Front Turn Lamp Circuit 9 (LG/O) Left Rear Stop/Turn Lamp Circuit 5 (O/LB) Right Rear Stop/Turn Lamp • **Is continuity present in all cases?**	Yes ▶ No ▶	GO to **J11**. SERVICE open in noncontinuous circuit. RESTORE vehicle. RETEST system.
J11	CHECK MINIATURE BULBS		
	• Remove miniature bulbs. • Check continuity of front turn lamps and rear stop/turn lamps. • **Is continuity present?**	Yes ▶ No ▶	GO to **J12**. REPLACE damaged miniature bulb. RESTORE vehicle. RETEST system.
J12	CHECK LAMP GROUNDS		
	• Disconnect battery ground cable. • Check continuity of Circuit 57 (BK) at each front turn lamp and each rear stop/turn lamp with a known good ground. • **Is continuity present?**	Yes ▶ No ▶	System OK. SERVICE open in noncontinuous circuit. RESTORE vehicle. RETEST system.

PINPOINT TEST K: INDIVIDUAL TURN SIGNAL/FLASHER LAMP INOPERATIVE

Test Step		Result ▶	Action to Take
K1	CHECK MULTI-FUNCTION SWITCH		
	• Connect Rotunda 73 Digital Multimeter 105-R0051 or equivalent to a known good ground and with the turn signal switch on, check for voltage at the multi-function switch on the following circuits. LH Front 3 (LG/W) Pin 8 RH Front 2 (W/LB) Pin 5 LH Rear 9 (LG/O) Pin 10 RH Rear 5 (O/LB) Pin 2 • **Is battery voltage present?**	Yes ▶ No ▶	GO to **K2**. REPLACE multi-function switch. RESTORE vehicle. RETEST system.
K2	CHECK FOR POWER TO SOCKETS		
	• Use Rotunda 73 Digital Multimeter 105-R0051 or equivalent to check for battery voltage to turn indicator bulb sockets with turn signal switch on. LH Front 3 (LG/W) RH Front 2 (W/LB) LH Rear 9 (LG/O) RH Rear 5 (O/LB) • **Is battery voltage present at each of these circuits?**	Yes ▶ No ▶	GO to **K3**. SERVICE noncontinuous circuit between multi-function switch and miniature bulbs. RESTORE vehicle. RETEST system.

Official Licensed Product Ford Motor Company

DIAGNOSIS AND TESTING (Continued)

PINPOINT TEST K: INDIVIDUAL TURN SIGNAL/FLASHER LAMP INOPERATIVE (Continued)

Test Step		Result ▶	Action to Take
K3	CHECK GROUND CIRCUIT		
	• Disconnect battery ground cable. • Use Rotunda 73 Digital Multimeter 105-R0051 or equivalent to check the continuity of ground Circuit 57 (BK) at the suspect lamp. • **Is the resistance 5 ohms or less?**	Yes ▶ No ▶	REPLACE bulb. RESTORE vehicle. RETEST system. SERVICE open in ground circuit. RESTORE vehicle. RETEST system.

PINPOINT TEST L: TURN SIGNAL LAMPS ON CONTINUOUSLY

Test Step		Result ▶	Action to Take
L1	CIRCUIT INSPECTION		
	• Check all circuits involving the indicator system for short circuits to power. Refer to Section 13-01. • **Do any such shorts exist?**	Yes ▶ No ▶	SERVICE damaged circuit as outlined in Section 13-01. RESTORE vehicle. RETEST system. GO to **L2**.
L2	CHECK MULTI-FUNCTION SWITCH		
	• Key off. • Actuate turn signal to the OFF position. Using a Rotunda 73 Digital Multimeter, check Circuits 9 (LG/O) Pin 10 and 5 (O/LB) Pin 2 at the multi-function switch. • **Is battery voltage present on either of these circuits?**	Yes ▶ No ▶	REPLACE multi-function switch. RESTORE vehicle. RETEST system. System OK.

Official Licensed Product Ford Motor Company

PINPOINT TEST M: ONE TURN SIGNAL LAMP INOPERATIVE

Test Step		Result ▶	Action to Take
M1	CHECK MINIATURE BULB		
	• Check miniature bulb of inoperative turn signal lamp. • **Does miniature bulb check OK?**	Yes ▶ No ▶	GO to **M2**. REPLACE damaged miniature bulb. RESTORE vehicle. RETEST system.
M2	CHECK FOR POWER		
	• With turn indicator in operating position, use Rotunda 73 Digital Multimeter 105-R0051 or equivalent to check voltage on affected circuit. • **Is battery voltage present on the circuit?**	Yes ▶ No ▶	GO to **M3**. SERVICE open circuit. RESTORE vehicle. RETEST system.
M3	CHECK GROUND CIRCUIT		
	• Using Rotunda 73 Digital Multimeter 105-R0051 or equivalent, check Circuit 57 (BK) at affected light. • **Is the resistance 5 ohms?**	Yes ▶ No ▶	Ground OK. SERVICE ground circuit. RESTORE vehicle. RETEST system.

PINPOINT TEST N: HAZARD FLASHER INOPERATIVE

Test Step		Result ▶	Action to Take
N1	CHECK POWER TO HAZARD FLASHER		
	• Using Rotunda 73 Digital Multimeter 105-R0051 or equivalent, check Fuse 13 (15A), Circuit 383 (R/W) for voltage to the hazard flasher. • **Is voltage present at hazard flasher?**	Yes ▶ No ▶	GO to **N2**. SERVICE open in Circuit 383 (R/W). RESTORE vehicle. RETEST system.
N2	CHECK FOR VOLTAGE AT HAZARD FLASHER		
	• Actuate hazard flasher to the ON position. • Check Circuit 385 (R/W) for voltage using Rotunda 73 Digital Multimeter 105-R0051 or equivalent at the multi-function switch. • **Is voltage present on Circuit 385 (R/W) at the multi-function switch?**	Yes ▶ No ▶	GO to **N3**. SERVICE open in Circuit 385 (R/W). RESTORE vehicle. RETEST system.

DIAGNOSIS AND TESTING (Continued)

PINPOINT TEST N: HAZARD FLASHER INOPERATIVE (Continued)

Test Step		Result ▶	Action to Take
N3	CHECK FOR VOLTAGE		
	• Using Rotunda 73 Digital Multimeter 105-R0051 or equivalent with hazard flasher on, check for voltage at the multi-function switch. LH Front Circuit 3 (LG/W) Pin 8 LH Rear Circuit 9 (LG/O) Pin 10 RH Front Circuit 2 (W/LB) Pin 5 RH Rear Circuit 5 (O/LB) Pin 2 • **Is battery voltage present in all cases?**	Yes ▶ No ▶	GO to **N4**. REPLACE multi-function switch. RESTORE vehicle. RETEST system.
N4	CHECK HAZARD FLASHER GROUND		
	• Use Rotunda 73 Digital Multimeter 105-R0051 or equivalent to check ground circuits at the lamps. • **Is resistance 5 ohms or less?**	Yes ▶ No ▶	REPLACE damaged miniature bulbs. RESTORE vehicle. RETEST system. SERVICE ground circuit. RESTORE vehicle. RETEST system.

PINPOINT TEST P: HAZARD FLASHERS ON CONTINUOUSLY

Test Step		Result ▶	Action to Take
P1	HAZARD FLASHERS CIRCUIT INSPECTION		
	• Check all circuits around the hazard flasher system for short circuits to power. • **Do such shorts exist?**	Yes ▶ No ▶	SERVICE damaged circuit. RESTORE vehicle. RETEST system. GO to **P2**.
P2	CHECK HAZARD SWITCH OPERATION		
	• Key on. • Hazard switch in the OFF position. With a Rotunda 73 Digital Multimeter 105-R0051 or equivalent, check Circuit 9 (LG/O) Pin 10 and Circuit 5 (O/LB) Pin 2 at the multi-function switch. • **Is voltage present on either of these circuits?**	Yes ▶ No ▶	REPLACE multi-function switch. RESTORE vehicle. RETEST system. System OK.

Official Licensed Product Ford Motor Company

Component Tests

NOTE: Use Rotunda 73 Digital Multimeter 105-R0051 or equivalent when performing the following component tests.

Turn Signal/Windshield Wiper Switch

1. Disconnect multi-function switch wiring harness connector.
2. Attach ohmmeter to switch terminals.
3. Cycle switch as required to test all functions of terminals under test.

NOTE: Closed circuit is 5 ohms or less resistance between terminals.

Component testing procedures are provided to determine whether a component is good or bad.

The component connector MUST BE REMOVED before testing. To test a single circuit within the component, select that circuit under the column TO TEST. If you wish to test the complete component, perform all tests.

Connect the tester to the terminals shown in the second column and operate the component as shown in the third column.

COMPONENT TESTING PROCEDURE

To Test	Connect Self-Powered Test Lamp or Ohmmeter to Terminals	Move Switch to These Positions	A Good Switch Will Indicate
Washer Switch Circuit	590 (DB/W) and 993 (BR/W)	With Wiper Switch OFF: Push Washer Switch in. Release Washer Switch.	Closed Circuit 103.3 k ohm
Wiper Switch Circuit	589 (O) and 993 (BR/W)	**Off** **Interval** **Low** **High**	47.6 k ohm 11.33 k ohm 4.08 k ohm Closed Circuit

(Continued)

DIAGNOSIS AND TESTING (Continued)

COMPONENT TESTING PROCEDURE (Cont'd)

To Test	Connect Self-Powered Test Lamp or Ohmmeter to Terminals	Move Switch to These Positions	A Good Switch Will Indicate
Interval Time Adjust	590 (DB/W) and 993 (BR/W)	Interval and Off	Rotate Control Toward OFF; Ohmmeter Will Show Smoothly Increasing Resistance from 3.3 k ohm Minimum to 103.3 k ohm Maximum.
		Low and High	3.3 k ohm
Flash-to-Pass	196 (DB/O) and 12 (LG/BK) 15 (R/Y) and 13 (R/BK)	Lever Stalk Pull and Hold Toward Steering Wheel.	Closed Circuit
Dimmer HI Beam	15 (R/Y) and 12 (LG/BK)	Lever Stalk Away from Steering Wheel.	Closed Circuit
Dimmer LO Beam	15 (R/Y) and 13 (R/BK)	Lever Stalk in Detent Closest to Steering Wheel.	Closed Circuit
Turn Switch Circuit	44 (LB) and 9 (LG/O), 44 (LB) and 3 (LG/W)	Turn Switch to TURN LEFT and Hazard Switch to OFF.	Closed Circuit
	44 (LB) and 5 (O/LB), 44 (LB) and 2 (W/LB)	Turn Switch to TURN RIGHT and Hazard Switch to OFF.	Closed Circuit
Stoplamp Feed-Through Circuit	511 (LG) and 9 (LG/O) 511 (LG) and 5 (O/LB)	Turn Switch to Center (No Turn) and Hazard Switch to OFF.	Closed Circuit

Hazard Flasher Lamp Switch

1. Disconnect multi-function switch wiring harness connector.
2. Attach ohmmeter to switch terminals.
3. Cycle switch as required to test all functions of terminals under test.

NOTE: Closed circuit resistance between terminals is 5 ohms or less.

Official Licensed Product
Ford Motor Company

COMPONENT TESTING PROCEDURE

To Test	Connect Self-Powered Test Lamp or Ohmmeter to Terminals	Move Switch to These Positions	A Good Switch Will Indicate
Hazard Switch	385 (W/R) and 2 (W/LB), 5 (O/LB), 3 (LG/W), 9 (LG/O)	Hazard Switch ON (Button Depressed then Released to FULL OUT Position).	Closed Circuit

Parking Lamps

Inspection and Verification

1. Verify the vehicle owner's original concern by operating the parking lamps to duplicate the original condition.
2. Inspect to determine if one of the following electrical concerns apply.

VISUAL INSPECTION CHART

Electrical
• Circuitry open/shorted • Damaged connector • Miniature bulb burned out • Damaged headlamp switch

3. If the concern(s) remains after the inspection, determine the symptom(s) and proceed to the following symptom chart.

Symptom Chart

NOTE: Use Rotunda 73 Digital Multimeter 105-R0051 or equivalent when performing electrical pinpoint tests.

PARKING LAMPS

Condition	Possible Source	Action
• Parking Lamps Inoperative	• Damaged circuitry. • Damaged headlamp switch.	• GO to Pinpoint Test Q.
• One or More Parking Lamps Inoperative	• Open circuitry. • Burned out miniature bulb.	• GO to Pinpoint Test R.

DIAGNOSIS AND TESTING (Continued)

PARKING LAMPS (Continued)

Condition	Possible Source	Action
• Parking Lamps On Continuously	• Damaged circuitry. • Damaged headlamp switch.	• GO to Pinpoint Test S.
• One or More Side Marker Lamps Inoperative	• Damaged circuit. • Burned out miniature bulb.	• GO to Pinpoint Test T.
• One or More Tail Lamps Inoperative	• Damaged circuitry. • Damaged miniature bulb.	• GO to Pinpoint Test U.
• One or More License Lamps Inoperative	• Damaged circuitry. • Damaged miniature bulb.	• GO to Pinpoint Test V.

Pinpoint Tests

PINPOINT TEST Q: PARKING LAMPS INOPERATIVE

Test Step		Result ▶	Action to Take
Q1	CHECK CIRCUIT 14 (BR) AT HEADLAMP SWITCH		
	• Actuate headlamp switch to the PARK position. • Using Rotunda 73 Digital Multimeter 105-R0051 or equivalent connected to a known good ground, check Circuit 14 (BR) at headlamp switch Pin R for voltage. • **Is battery voltage present?**	Yes ▶ No ▶	SERVICE Circuit 14 (BR) for an open circuit. RESTORE vehicle. RETEST system. GO to **Q2.**
Q2	CHECK SUPPLY TO PARKING LAMPS		
	• With Rotunda 73 Digital Multimeter 105-R0051 or equivalent, check for voltage on Circuit 195 (T/W) at headlamp switch. • **Is battery voltage present?**	Yes ▶ No ▶	REPLACE damaged headlamp switch. RESTORE vehicle. RETEST system. GO to **Q3.**
Q3	CHECK SUPPLY CIRCUIT TO HEADLAMP SWITCH		
	• Using Rotunda 73 Digital Multimeter 105-R0051 or equivalent connected to a known good ground, check Circuit 195 (T/W) at output side of IP Fuse 4 (15A). • **Is battery voltage present?**	Yes ▶ No ▶	SERVICE Circuit 195 (T/W) for an open circuit. RESTORE vehicle. RETEST system. GO to **Q4.**
Q4	CHECK IP FUSE 4 (15A)		
	• Remove and inspect IP fuse panel Fuse 4 (15A) for an open circuit. • **Is Fuse 4 (15A) good?**	Yes ▶ No ▶	GO to **Q5.** REPLACE Fuse 4 (15A). REPEAT step **Q4.**
Q5	CHECK SUPPLY TO FUSE 4 (15A)		
	• Using Rotunda 73 Digital Multimeter 105-R0051 or equivalent, check for voltage at feed side of IP Fuse 4 (15A), Circuit 38 (BK/O) and load side of power distribution box Fuse 20 (15A), Circuit 38 (BK/O). • **Is battery voltage present?**	Yes ▶ No ▶	GO to **Q6.** SERVICE open in Circuit 38 (BK/O). RESTORE vehicle. RETEST system.
Q6	CHECK POWER DISTRIBUTION BOX FUSE 20 (50A)		
	• Remove and inspect power distribution box Fuse 20 (50A) for an open circuit. • **Is Fuse 20 (50A) good?**	Yes ▶ No ▶	SERVICE power distribution box power feed, Circuit 37 (Y). RESTORE vehicle. RETEST system. REPLACE Fuse 20 (50A). RESTORE vehicle. RETEST system.

Licensed Product Ford Motor Company

DIAGNOSIS AND TESTING (Continued)

PINPOINT TEST R: ONE OR MORE PARKING LAMPS INOPERATIVE

Test Step		Result ▶	Action to Take
R1	CHECK SUPPLY TO SUSPECT PARKING LAMP		
	• Turn headlamp switch to the parking lamp position. • Gain access to suspect parking lamp connector. Disconnect the suspect parking lamp. • Using Rotunda 73 Digital Multimeter 105-R0051 or equivalent connected to a known good ground, connect the other end to Circuit 14 (BR) at parking lamp connector. • **Is battery voltage present?**	Yes ▶ No ▶	GO to **R2.** SERVICE Circuit 14 (BR) for an open circuit. RESTORE vehicle. RETEST system.
R2	CHECK SUSPECT PARKING LAMP		
	• Using Rotunda 73 Digital Multimeter 105-R0051 or equivalent connected to a known good ground, connect second lead to Circuit 57 (BK) at suspect park lamp connector. • Measure resistance. • **Is resistance 5 ohms or less?**	Yes ▶ No ▶	REPLACE damaged park lamp miniature bulb. RESTORE vehicle. RETEST system. SERVICE Circuit 57 (BK) for open circuit. RESTORE vehicle. RETEST system.

PINPOINT TEST S: PARKING LAMPS ON CONTINUOUSLY

Test Step		Result ▶	Action to Take
S1	CHECK HEADLAMP SWITCH HARNESS		
	• Disconnect battery ground cable. • Remove headlamp switch harness from the headlamp switch. • Reattach the battery ground cable. • **Do the parking lights go on?**	Yes ▶ No ▶	SERVICE short to power. RESTORE vehicle. RETEST system. GO to **S2.**
S2	HEADLAMP SWITCH TEST		
	• Disconnect the battery ground cable. • Reconnect the headlamp switch harness to the headlamp switch. Headlamp switch in OFF position. • Reattach the battery ground cable. • **Do the parking lights go on?**	Yes ▶ No ▶	REPLACE damaged headlamp switch. RESTORE vehicle. RETEST system. System OK.

Official Licensed Product Motorcraft Company

PINPOINT TEST T: ONE OR MORE SIDE MARKER LAMPS INOPERATIVE

Test Step		Result ▶	Action to Take
T1	CHECK VOLTAGE TO MARKER LAMPS		
	• Turn headlamp switch to the ON position. • Gain access to the suspect marker lamp connector. • Disconnect the marker lamp bulb. • Using a Rotunda 73 Digital Multimeter 105-R0051 or equivalent, probe Circuit 667 (W/R) for voltage. • **Is battery voltage present?**	Yes ▶ No ▶	GO to **T2.** SERVICE Circuit 667 (W/R) for an open circuit. RESTORE vehicle. RETEST system.
T2	CHECK SIDE MARKER LAMP GROUND		
	• Using Rotunda 73 Digital Multimeter 105-R0051 or equivalent connected to a known good ground, connect the second lead to Circuit 206 (W) at the marker connector. • Measure the resistance. • **Is the resistance 5 ohms or less?**	Yes ▶ No ▶	REPLACE damaged marker lamp miniature bulb. RESTORE vehicle. RETEST system. SERVICE Circuit 206 (W) for open circuit. RESTORE vehicle. RETEST system.

PINPOINT TEST U: ONE OR MORE TAIL LAMPS INOPERATIVE

Test Step		Result ▶	Action to Take
U1	CHECK VOLTAGE TO TAIL LAMPS		
	• Turn headlamp switch to the ON position. • Gain access to the suspect tail lamp connector. • Disconnect the suspect tail lamp. • Using Rotunda 73 Digital Multimeter 105-R0051 or equivalent, probe for voltage on Circuit 14 (BR) at the tail lamp. • **Is battery voltage present?**	Yes ▶ No ▶	GO to **U2.** SERVICE Circuit 14 (BR) for an open circuit. RESTORE vehicle. RETEST system.

DIAGNOSIS AND TESTING (Continued)

PINPOINT TEST U: ONE OR MORE TAIL LAMPS INOPERATIVE (Continued)

Test Step		Result ▶	Action to Take
U2	CHECK TAIL LAMP GROUND		
	• Using Rotunda 73 Digital Multimeter 105-R0051 or equivalent connected to a known good ground, connect the second lead to Circuit 57 (BK) at the tail lamp connector. • Measure the resistance. • **Is the resistance 5 ohms or less?**	Yes ▶	REPLACE damaged tail lamp miniature bulb. RESTORE vehicle. RETEST system.
		No ▶	SERVICE Circuit 57 (BK) for open circuit. RESTORE vehicle. RETEST system.

PINPOINT TEST V: ONE OR MORE LICENSE LAMPS INOPERATIVE

Test Step		Result ▶	Action to Take
V1	CHECK VOLTAGE TO TAIL LAMPS		
	• Turn headlamp switch to the ON position. • Gain access to the suspect license lamp connector. • Disconnect the license lamp bulb. • Using Rotunda 73 Digital Multimeter 105-R0051 or equivalent, probe for voltage on Circuit 14 (BR) at the license lamp. • **Is battery voltage present?**	Yes ▶	GO to **V2**.
		No ▶	SERVICE Circuit 14 (BR) for an open circuit. RESTORE vehicle. RETEST system.
V2	CHECK LICENSE LAMP GROUND		
	• Using Rotunda 73 Digital Multimeter 105-R0051 or equivalent connected to a known good ground, connect the second lead to Circuit 57 (BK) at the license lamp connector. • Measure the resistance. • **Is the resistance 5 ohms or less?**	Yes ▶	REPLACE damaged license lamp miniature bulb. RESTORE vehicle. RETEST system.
		No ▶	SERVICE Circuit 57 (BK) for open circuit. RESTORE vehicle. RETEST system.

Official Licensed Product
Ford Motor Company

Backup Lamps

Inspection and Verification

1. Verify the vehicle owner's original concern by operating the backup lamps to duplicate the condition.
2. Inspect to determine if one of the following electrical concerns apply.

VISUAL INSPECTION CHART

Electrical
• Circuitry open / shorted • Blown fuse • Bulb burned out • Damaged backup lamp switch, park / neutral position switch or transmission range (TR) sensor

3. If the concern(s) remains after the inspection, determine the symptom(s) and proceed to the following symptom chart.

Symptom Chart

Refer to the Electrical and Vacuum Troubleshooting Manual for the connector numbers in the pinpoint tests.

NOTE: Use Rotunda 73 Digital Multimeter 105-R0051 or equivalent when performing electrical pinpoint tests.

BACKUP LAMPS

Condition	Possible Source	Action
• Backup Lamps Inoperative	• Circuitry open / shorted. • Damaged backup lamp switch or transmission range (TR) sensor. • Blown fuse.	• GO to Pinpoint Test W.
• Individual Backup Lamps Inoperative	• Open circuitry. • Burned-out bulb. • Damaged connector.	• GO to Pinpoint Test X.
• Backup Lamps On Continuously	• Damaged backup lamp switch or transmission range (TR) sensor. • Short circuit.	• GO to Pinpoint Test Y.

DIAGNOSIS AND TESTING (Continued)

Pinpoint Tests

PINPOINT TEST W: BACKUP LAMPS INOPERATIVE

Test Step		Result ▶	Action to Take
W1	CHECK SUPPLY AT BACKUP LAMP SWITCH		
	• Key in RUN. NOTE: Make sure engine is not running. • Gain access to backup lamp switch (manual transmission) or transmission range (TR) sensor (automatic transmission). • Using Rotunda 73 Digital Multimeter 105-R0051 or equivalent, connected to a known good ground, check Circuit 298 (P/O) for voltage. • **Is battery voltage present?**	Yes ▶ No ▶	GO to **W4**. GO to **W2**.
W2	CHECK SUPPLY AT FUSE 5 (15A)		
	• Using Rotunda 73 Digital Multimeter 105-R0051 or equivalent, check output side of power distribution box Fuse 5 (15A) for voltage. • **Is battery voltage present?**	Yes ▶ No ▶	SERVICE Circuit 298 (P/O) for open circuit. RESTORE vehicle. RETEST system. GO to **W3**.
W3	CHECK SUPPLY TO FUSE 5 (15A)		
	• Using Rotunda 73 Digital Multimeter 105-R0051 or equivalent, check input side of Fuse 5 (15A). • **Is battery voltage present?**	Yes ▶ No ▶	REPLACE damaged power distribution box Fuse 5 (15A). RESTORE vehicle. RETEST system. SERVICE Circuit 687 (GY/Y) for open circuit. RESTORE vehicle. RETEST system.
W4	CHECK BACKUP LAMP SWITCH OR TRANSMISSION RANGE (TR) SENSOR		
	• Shift transmission shift control selector lever and housing to the REVERSE position. • Using Rotunda 73 Digital Multimeter 105-R0051 or equivalent connected to ground, check Circuit 140 (BK/PK) for voltage. • **Is battery voltage present?**	Yes ▶ No ▶	GO to **W5**. REPLACE damaged backup lamp switch (manual transmission) or transmission range (TR) sensor (automatic transmission). RESTORE vehicle. RETEST system.
W5	CHECK SUPPLY TO BACKUP LAMPS		
	• Gain access to backup lamps. • Disconnect backup lamp miniature bulb. • Using Rotunda 73 Digital Multimeter 105-R0051 or equivalent connected to a known good ground, check Circuit 140 (BK/PK) for voltage. • **Is battery voltage present?**	Yes ▶ No ▶	GO to **W6**. SERVICE Circuit 140 (BK/PK) for open circuit. RESTORE vehicle. RETEST system.
W6	CHECK BACKUP LAMP GROUND		
	• Using Rotunda 73 Digital Multimeter 105-R0051 or equivalent connected to a known good ground, connect second lead to Circuit 57 (BK) at backup lamp socket. • Measure resistance. • **Is resistance 5 ohms or less?**	Yes ▶ No ▶	REPLACE damaged backup lamp miniature bulb. RESTORE vehicle. RETEST system. SERVICE Circuit 57 (BK) for open circuit. RESTORE vehicle. RETEST system.

PINPOINT TEST X: INDIVIDUAL BACKUP LAMPS INOPERATIVE

Test Step		Result ▶	Action to Take
X1	INDIVIDUAL BACKUP LAMP CHECK		
	• Gain access to backup lamps. • Disconnect backup lamp miniature bulb. • Using Rotunda 73 Digital Multimeter 105-R0051 or equivalent connected to a good ground, check Circuit 140 (BK/PK) for voltage. • **Is battery voltage present?**	Yes ▶ No ▶	GO to **X2**. SERVICE Circuit 140 (BK/PK) for open circuit. RESTORE vehicle. RETEST system.

Official Licensed Product Ford Motor Company

DIAGNOSIS AND TESTING (Continued)

PINPOINT TEST X: INDIVIDUAL BACKUP LAMPS INOPERATIVE (Continued)

Test Step		Result ▶	Action to Take
X2	INDIVIDUAL BACKUP GROUND CHECK		
	• Using Rotunda 73 Digital Multimeter 105-R0051 or equivalent connected to a good ground. • With the second lead, probe the Circuit 57 (BK) at backup lamp socket. • Measure the resistance. • **Is resistance 5 ohms or less?**	Yes ▶	REPLACE damaged backup lamp miniature bulb. RESTORE vehicle. RETEST system.
		No ▶	SERVICE Circuit 57 (BK) for open circuit. RESTORE vehicle. RETEST system.

PINPOINT TEST Y: BACKUP LAMPS ON CONTINUOUSLY

Test Step		Result ▶	Action to Take
Y1	BACKUP LAMP CIRCUIT CHECK		
	• Gain access to backup lamp switch connector C166. With vehicle in neutral or park, disconnect backup lamp switch connector C166 or transmission range (TR) sensor connector C1012. • **Do the backup lamps go out?**	Yes ▶	REPLACE damaged backup lamp switch or transmission range (TR) sensor. RESTORE vehicle. RETEST system.
		No ▶	SERVICE short to Circuit 140 (BK/PK). RESTORE vehicle. RETEST system.

Component Tests

NOTE: Use Rotunda 73 Digital Multimeter 105-R0051 or equivalent when performing the following component tests.

Transmission Range (TR) Sensor/Switch

1. Disconnect transmission range sensor wiring harness connector.
2. Attach ohmmeter to sensor terminals.
3. Cycle switch as required to test all functions of terminals under test.
4. Check sensor resistance between terminals.

Official Licensed Product Ford Motor Company

COMPONENT TESTING PROCEDURE

To Test	Connect Self-Powered Test Lamp or Ohmmeter to Terminals	Move Switch to These Positions	A Good Switch Will Indicate
Transmission Circuit	359 (GY/R) and 199 (LB/Y)	**Park** **Reverse** **Neutral** **Drive** **Second (2)** **First (1)**	3770-4607 ohms 1304-1593 ohms 660-807 ohms 361-442 ohms 190-232 ohms 78-95 ohms
Backup Lamp Circuit	298 (P/O) and 140 (BK/PK)	**Park** **Reverse** **Neutral** **Drive** **Second (2)** **First (1)**	Greater than 100 k ohms Less than 5.0 ohms Greater than 100 k ohms Greater than 100 k ohms Greater than 100 k ohms Greater than 100 k ohms
Starter Relay Circuit	32 (R/LB) and 33 (W/PK)	**Park** **Reverse** **Neutral** **Drive** **Second (2)** **First (1)**	Less than 5.0 ohms Greater than 100 k ohms Less than 5.0 ohms Greater than 100 k ohms Greater than 100 k ohms Greater than 100 k ohms
4x4 Shift on the Fly Circuit	463 (R/W) and 57 (BK)	**Park** **Reverse** **Neutral** **Drive** **Second (2)** **First (1)**	Open Circuit Open Circuit Closed Circuit Open Circuit Open Circuit Open Circuit

DIAGNOSIS AND TESTING (Continued)

Trailer Towing Package Wiring

Inspection and Verification

1. Check the trailer feed wiring (13A576) and the added trailer connector for obvious signs of damage.
2. Check fuses for damage.
3. If the concern remains after these checks proceed to the following symptom chart.

Symptom Chart

NOTE: Use Rotunda 73 Digital Multimeter 105-R0051 or equivalent when performing electrical pinpoint tests.

TRAILER LAMPS

Condition	Possible Source	Action
• Trailer Lamps Inoperative	• Fuse. • Rear lamp wiring. • Trailer feed wiring. • Trailer wiring or bulbs.	• GO to Pinpoint Test Z.
• Trailer Stop, Turn or Hazard Lamps Inoperative	• Fuse. • Rear lamp wiring. • Trailer feed wiring. • Trailer wiring or bulbs.	• GO to Pinpoint Test Z.
• Trailer Tail Lamp and Running Lamps Inoperative	• Fuse. • Rear lamp wiring. • Trailer feed wiring. • Trailer wiring or bulbs.	• GO to Pinpoint Test Z.
• Trailer Battery Charging Inoperative	• Fuse. • Rear lamp wiring. • Trailer feed wiring.	• GO to Pinpoint Test Z.
• Trailer Electric Brakes Inoperative	• Fuse. • Rear lamp wiring. • Trailer feed wiring. • Trailer wiring or bulbs.	• GO to Pinpoint Test Z.
• Single Trailer Lamp Inoperative	• Trailer wiring or bulbs.	• Have trailer serviced by an authorized camper/trailer service center.

Digital Licensed Product Ford Motor Company

Pinpoint Test

PINPOINT TEST Z: TRAILER TOWING PACKAGE WIRING

Test Step		Result ▶	Action to Take
Z1	CHECK LIGHTING OPERATION		
	• Disconnect trailer from vehicle and disconnect trailer feed wiring from rear lamp wiring. • Check operation of vehicle exterior lighting systems for any concerns. • **Does the exterior lighting system of vehicle operate properly?**	Yes ▶ No ▶	GO to **Z2**. SERVICE any vehicle exterior lighting concerns. REFER to the appropriate procedure in this section.
Z2	CHECK FUSES		
	• Check the following fuses: Fuse Panel Fuse No. 4 Power Distribution Box Fuse No. 4, 5, 6, 7, 18, 21 • **Are fuses OK?**	Yes ▶ No ▶	GO to **Z3**. SERVICE as required. RETEST trailer lighting system. If concern is still present, GO to **Z3**.
Z3	CHECK TRAILER GROUND FEED		
	• Using a volt-ohmmeter, check resistance between Circuit 206 (W) of trailer feed wiring end and known good ground. • **Is resistance less than 5 ohms?**	Yes ▶ No ▶	GO to **Z4**. GO to **Z9**.
Z4	CHECK CIRCUIT 962 (BR/W) FOR BATTERY VOLTAGE		
	• Key in RUN, turn the headlamps on. • Using a volt-ohmmeter, measure voltage of trailer feed wiring end Circuit 962 (BR/W). • **Is voltage greater than 10 V?**	Yes ▶ No ▶	GO to **Z5**. GO to **Z9**.

DIAGNOSIS AND TESTING (Continued)

PINPOINT TEST Z: TRAILER TOWING PACKAGE WIRING (Continued)

Test Step		Result	Action to Take
Z5	CHECK TRAILER RH TURN, STOP AND HAZARD FEED		
	• Key in RUN, turn the hazard lamps on. • Using a volt-ohmmeter, measure voltage of trailer feed wiring end Circuit 64 (DG). • **Does voltage modulate from greater than 10 V to less than 1 V?**	Yes ▶ No ▶	GO to **Z6**. GO to **Z15**.
Z6	CHECK TRAILER LH TURN, STOP AND HAZARD FEED		
	• Key in RUN, turn the hazard lamps on. • Using a volt-ohmmeter, measure voltage of trailer feed wiring end Circuit 52 (Y). • **Does voltage modulate from greater than 10 V to less than 1 V?**	Yes ▶ No ▶	GO to **Z7**. GO to **Z15**.
Z7	CHECK TRAILER BATTERY FEED		
	• Key in RUN. • Using a volt-ohmmeter, measure voltage of trailer feed wiring end Circuit 49 (O). • **Is voltage greater than 10 V?**	Yes ▶ No ▶	GO to **Z8**. GO to **Z9**.
Z8	CHECK TRAILER ELECTRIC BRAKE FEED		
	• Key in RUN. • With the assistance of another person, while pressing the brake pedal, measure voltage of trailer feed wiring end Circuit 43 (DB). • **Is voltage greater than 10 V?**	Yes ▶ No ▶	The vehicle is operating properly. Have trailer serviced by an authorized camper/trailer service center. SERVICE open in Circuit 43 (DB) of trailer feed wiring or electronic brake control system. RETEST system.
Z9	CHECK RELAY GROUND		
	• Locate relay connector for circuit. • Using a volt-ohmmeter, check resistance of Pin 85 of trailer battery charge relay connector and known good ground. • **Is resistance less than 5 ohms?**	Yes ▶ No ▶	GO to **Z10**. SERVICE open in Circuit 57 (BK) of engine control sensor wiring. RETEST system.
Z10	CHECK RELAY POWER		
	• Locate relay connector for circuit. • Using a volt-ohmmeter, check voltage of Pin 86 of trailer battery charge relay connector. • **Is voltage greater than 10 V?**	Yes ▶ No ▶	GO to **Z11**. SERVICE open in Circuit 298 (P/O) of engine control sensor wiring. RETEST system.
Z11	CHECK TRAILER MARKER LAMPS RELAY FEED		
	• Key in RUN, turn the headlamps on. • Using a volt-ohmmeter, measure voltage of Circuit 14 (BR) of the trailer running lamp relay connector. • **Is voltage greater than 10 V?**	Yes ▶ No ▶	GO to **Z12**. SERVICE open in Circuit 14 (BR) of engine control sensor wiring. RETEST system.
Z12	CHECK TRAILER MARKER LAMPS RELAY GROUND		
	• Locate relay connector for circuit. • Using a volt-ohmmeter, check resistance of Circuit 57 (BK) of trailer marker lamps relay connector and known good ground. • **Is resistance less than 5 ohms?**	Yes ▶ No ▶	GO to **Z13**. SERVICE open in Circuit 57 (BK) of engine control sensor wiring. RETEST system.
Z13	CHECK TRAILER BACKUP LAMPS RELAY GROUND		
	• Locate relay connector for circuit. • Using a volt-ohmmeter, check resistance of Pin 85 of trailer backup lamps relay connector and known good ground. • **Is resistance less than 5 ohms?**	Yes ▶ No ▶	GO to **Z14**. SERVICE open in Circuit 57 (BK) of engine control sensor wiring. RETEST system.
Z14	CHECK TRAILER BACKUP LAMP RELAY FEED		
	• Locate relay connector for circuit. • Using a volt-ohmmeter, check voltage of Pin 30 of trailer backup lamps relay connector. • **Is voltage greater than 10 V?**	Yes ▶ No ▶	GO to **Z15**. SERVICE open in Circuit 963 (BK/LG) of engine control sensor wiring. RETEST system.

Official Licensed Product Ford Motor Company

DIAGNOSIS AND TESTING (Continued)

PINPOINT TEST Z: TRAILER TOWING PACKAGE WIRING (Continued)

Test Step		Result	Action to Take
Z15	CHECK TRAILER RH TURN, STOP AND HAZARD FEED		
	• Key in RUN, turn the hazard lamps on. • Using a volt-ohmmeter, measure voltage of Pins 6 and 3 of the trailer adapter connector. • **Does voltage modulate from greater than 10 V to less than 1 V?**	Yes ▶ No ▶	GO to **Z16**. SERVICE open in Circuit 52 or Circuit 9 for left side or Circuit 64 or Circuit 5 for right side. RETEST system.
Z16	CHECK TRAILER WIRING FEED WIRING		
	• Using a volt-ohmmeter, check the following relay pins and circuits for continuity: — Trailer battery charging relay Pin 4 to trailer feed wiring end Circuit 49 (O). — Trailer backup lamps relay Pin 30 to trailer feed wiring end Circuit 963 (BK/LG). — Trailer marker lamps relay Circuit 962 (BR/W) to trailer feed wiring end Circuit 962 (BR/W). • **Do all circuits have continuity?**	Yes ▶ No ▶	REPLACE relay for circuit not functioning properly. RETEST system. SERVICE open in trailer feed wiring for circuit(s) that indicated no continuity. RETEST system.

REMOVAL AND INSTALLATION

Headlamp Switch

Removal

1. Disconnect battery ground cable (14301).
2. On vehicles with tilt column, position steering wheel (3600) in full down position.
3. On vehicles with column shift, set parking brake and position shift lever to the lowest position.
4. Pull headlamp knob to HEAD position.
5. Insert a small screwdriver onto clip and pull clip and knob outward, removing headlamp knob.

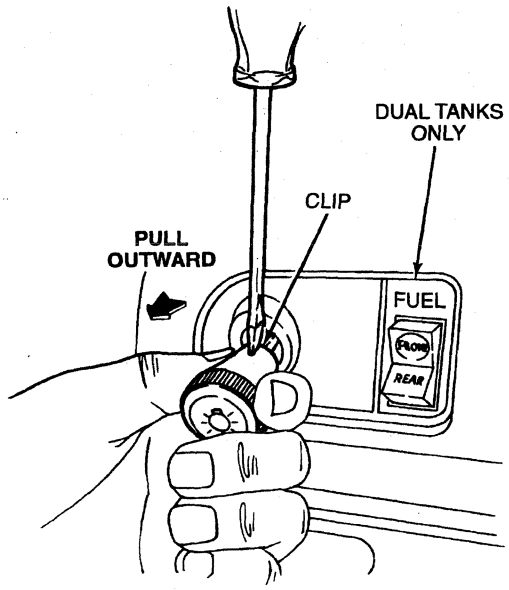

K20581-B

6. Unscrew headlamp bezel.
7. NOTE: Wiring is connected to the instrument panel finish panel (044D70).
   Remove two exposed screws from under right and left lower instrument panel mouldings.
8. Unsnap five retaining clips by pulling the instrument panel finish panel rearward starting with the two at the steering column (one each side) and then the three at top of instrument panel finish panel.
9. Disconnect the wiring from the instrument panel finish panel.
10. Remove the switch push rod by inserting a punch or similar tool into access hole of headlamp switch (11654) while pulling the push rod from headlamp switch.
11. Unscrew the mounting nut. Remove the headlamp switch from instrument panel (04320), then remove the wiring connector from the headlamp switch.

Installation

1. NOTE: When the battery (10655) has been disconnected and reconnected, some abnormal drive symptoms may occur while the powertrain control module (PCM)(12A650) relearns its adaptive strategy. The vehicle may need to be driven 16 km (10 miles) or more to relearn the strategy.
   Follow removal procedure in reverse order.

Official Licensed Product Ford Motor Company

REMOVAL AND INSTALLATION (Continued)

Instrument Panel

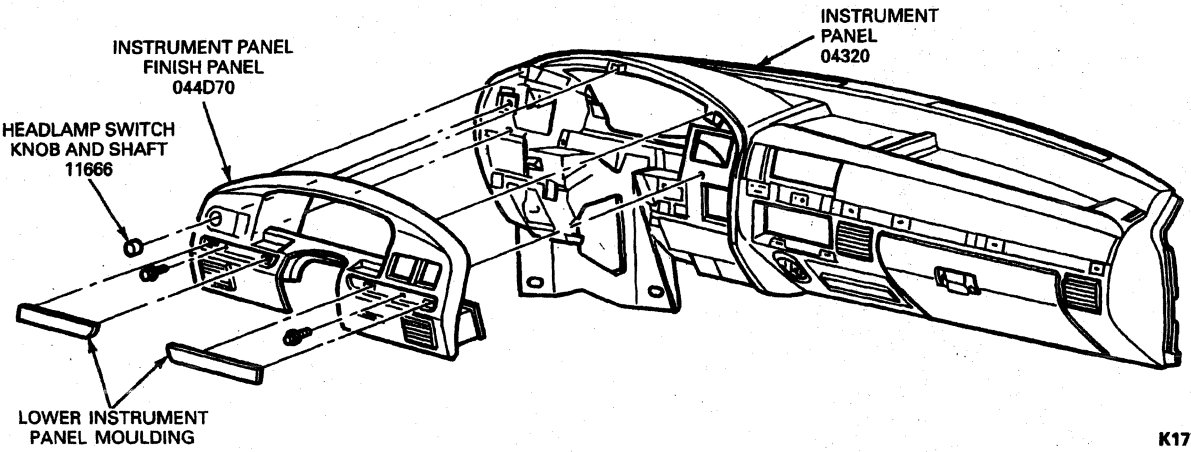

Stoplight Switch

Removal

1. NOTE: Locking tab must be lifted before connector can be removed.

   Disconnect connector to window regulator safety relay switch wiring (14A200) from stoplight switch.
2. NOTE: Since the switch side plate nearest the brake pedal (2455) is slotted, it is not necessary to remove the power brake booster (2005) and black bushing from the brake pedal pin. On vehicles equipped with speed control, the spacer washer is replaced by the dump valve adapter washer assembly.

   Remove the hairpin retainer. Slide stoplight switch, power brake booster, white nylon washer and bushing away from brake pedal.
3. Remove washer and then the stoplight switch by sliding stoplight switch up or down.

Stoplight Switch Installation and Wiring

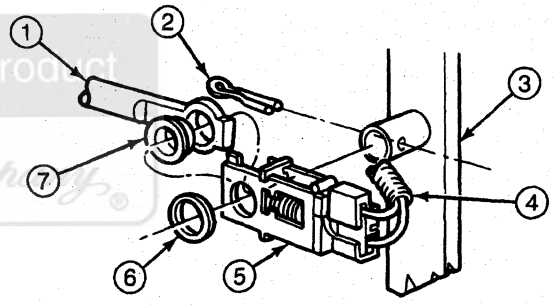

Item	Part Number	Description
1	2005	Power Brake Booster
2	380699	Self-Locking Pin
3	2455	Brake Pedal
4	—	Wiring (Part of 14401)
5	13480	Stoplight Switch
6	2B129	Spacer
7	2A309	Bushing

Installation

1. Position stoplight switch so the U-shaped side is nearest the brake pedal and directly over / under the pin.
2. Slide stoplight switch up / down trapping the power brake booster and black bushing between the switch side plates.

Official Licensed Product Ford Motor Company

REMOVAL AND INSTALLATION (Continued)

3. **CAUTION: Do not substitute other types of pin retainers. Use only factory-supplied hairpin retainer.**

   Push stoplight switch and power brake booster firmly toward brake pedal arm. Assemble outside white plastic washer to hairpin. Install hairpin retainer to hold entire assembly.
4. **CAUTION: Stoplight switch wire harness must have sufficient length to travel with stoplight switch during full stroke of brake pedal. If wire length is too short, reroute or service harness as required.**

   Install connector of stoplight switch wiring harness to stoplight switch.
5. Check stoplight switch for proper operation.

Lamp Switch, Backup, 5-Speed Manual Overdrive Transmission

Removal

1. NOTE: The backup lamp switch is mounted on the driver side of the transmission assembly. It is non-adjustable.

   Place the transmission selector lever in any position other than reverse.
2. Disconnect the backup lamp switch to rear lamp feed wire (15525) from transmission.
3. Remove the switch from the transmission assembly.

Installation

1. Follow removal procedure in reverse order.

Backup Lamp Switch, S5-47 ZF Transmission

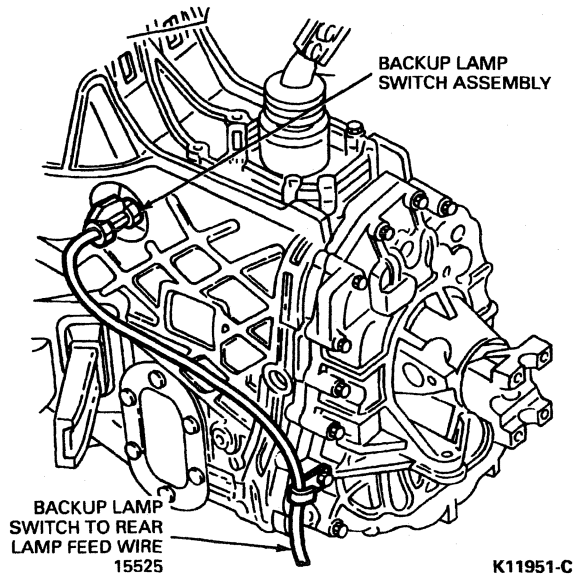

K11951-C

Backup Lamp Switch Installed F-250 Heavy Duty, F-350 LD

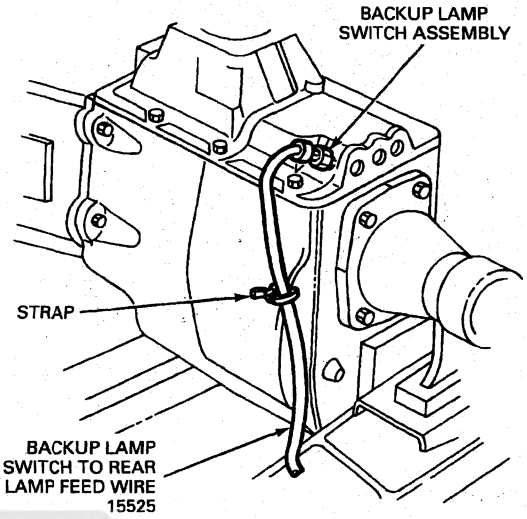

K11950-C

Multi-Function Switch

Refer to Section 11-05.

Headlamp Bulb

Removal

WARNING: THE HALOGEN HEADLAMP BULB (13007) CONTAINS GAS UNDER PRESSURE. THE HEADLAMP BULB MAY SHATTER IF THE GLASS ENVELOPE IS SCRATCHED OR THE HEADLAMP BULB IS DROPPED. HANDLE HEADLAMP BULB CAREFULLY. GRASP HEADLAMP BULB ONLY BY ITS PLASTIC BASE. AVOID TOUCHING THE GLASS ENVELOPE. KEEP HEADLAMP BULB OUT OF REACH OF CHILDREN. ENERGIZE THE HEADLAMP BULB ONLY WHEN INSTALLED IN THE HEADLAMP (13008).

1. Check that headlamp switch (11654) is in OFF position.
2. Lift hood (16612) and locate headlamp bulb installed in rear of headlamp body.
3. Remove electrical connector from headlamp bulb by grasping connector firmly and snapping connector rearward.
4. Remove headlamp bulb retainer (13N019) by rotating counterclockwise (when viewed from rear) about one-eighth turn and sliding headlamp bulb retainer off plastic base. Keep headlamp bulb retainer to be used again to retain new headlamp bulb.

Official Licensed Product Motor Company

REMOVAL AND INSTALLATION (Continued)

5. Carefully remove headlamp bulb from socket in reflector by gently pulling straight backward out of socket. Do not rotate headlamp bulb during removal.

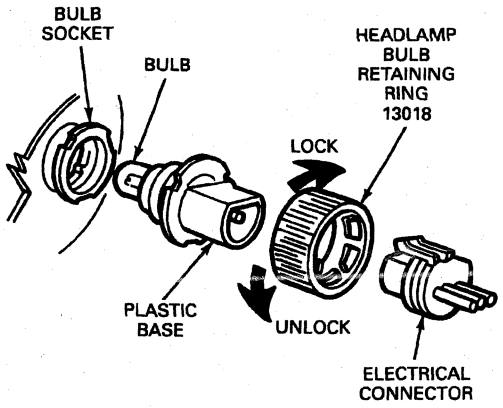

Installation

1. **CAUTION: Bulbs No. 9004 and No. 9007 look similar but are not interchangeable.**

   With flat side of plastic base of headlamp bulb facing upward, insert glass envelope into socket. Turn base slightly to left or right, if necessary, to align grooves in forward part of plastic base with corresponding locating tabs inside socket.
2. When grooves are aligned, push headlamp bulb firmly into socket until mounting flange on base contacts rear face of socket.
3. Slip headlamp bulb retaining ring (13015) over rear of plastic base against mounting flange. Lock headlamp bulb retaining ring into socket by rotating headlamp bulb retaining ring clockwise. A stop will be felt when headlamp bulb retaining ring is fully engaged.
4. Push electrical connector into rear of plastic base until it snaps and locks into position.
5. Check lamp to make sure it is seated securely. If loose, install again and make sure the three adjuster screws are engaged.
6. NOTE: A properly aimed headlamp normally need not be reaimed after installation of this headlamp bulb. A burned-out headlamp bulb should not be removed from the headlamp reflector until just before a replacement headlamp bulb is to be installed. Removal of a bulb for an extended period of time may allow contaminants (dust, moisture, smoke) to enter the headlamp body and affect the performance of the headlamp. When servicing the headlamp bulb, energize the headlamp bulb only while it is contained within the headlamp body.

   Check headlamps for proper operation.

Official Licensed Product Ford Motor Company

REMOVAL AND INSTALLATION (Continued)

Headlamp

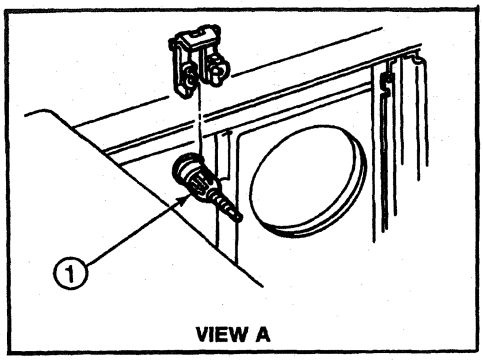

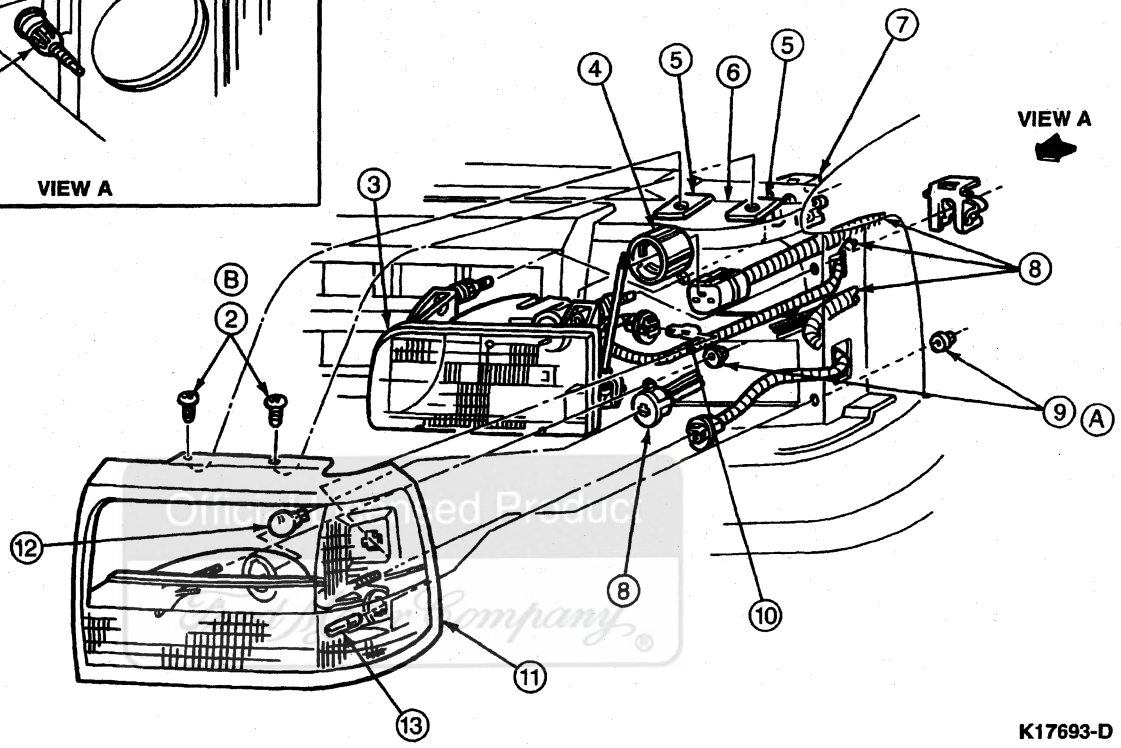

Item	Part Number	Description
1	—	Adjusting Screw Assy (Part of 13005)
2	N801603	Screw (2 Req'd Each Side)
3	13005	Headlamp Assy
4	13N019	Headlamp Bulb Retainer
5	N806851	J-Nuts (2 Req'd)
6	8A184	Radiator Grille Opening Panel Reinforcement
7	13N020	Headlamp Retainer Clip

(Continued)

Item	Part Number	Description
8	12A581	Wiring Assy
9	N621906	Nut and Washer (2 Req'd)
10	13465	Bulb No. 916NA
11	13064	Headlamp Door
12	13465	Bulb No. 3157
13	13465	Bulb No. 916
A	—	Tighten to 4-7 N·m (36-61 Lb-In)
B	—	Tighten to 1.4-2.3 N·m (13-20 Lb-In)

Headlamp Assembly

Removal

1. Remove two screws and two nuts retaining headlamp door (13064).
2. Pull headlamp door from vehicle. Remove three bulbs and sockets.
3. Disconnect engine control sensor wiring (12A581) from headlamp bulb (13007).
4. Remove two retainers attaching upper two attachments of headlamp (13008).
5. Turn horizontal headlamp adjusting screw (13032) completely out of the adjusting nut.
6. Pull headlamp from vehicle.

Installation

1. Follow removal procedure in reverse order.

REMOVAL AND INSTALLATION (Continued)

2. Tighten screws to 1.4-2.3 N·m (13-20 lb-in). Tighten nuts to 4-7 N·m (36-61 lb-in).
3. Check headlamp aim. Refer to Headlamp in the Adjustments portion of this section.

Lamps, Parking, Front Lamp

Lamp Assembly

Removal

1. Remove nuts and screws attaching headlamp door (13064).
2. Pull headlamp door away from headlamp bulb (13007) and disconnect socket from lamp body.

Installation

1. Follow removal procedure in reverse order.

Headlamp

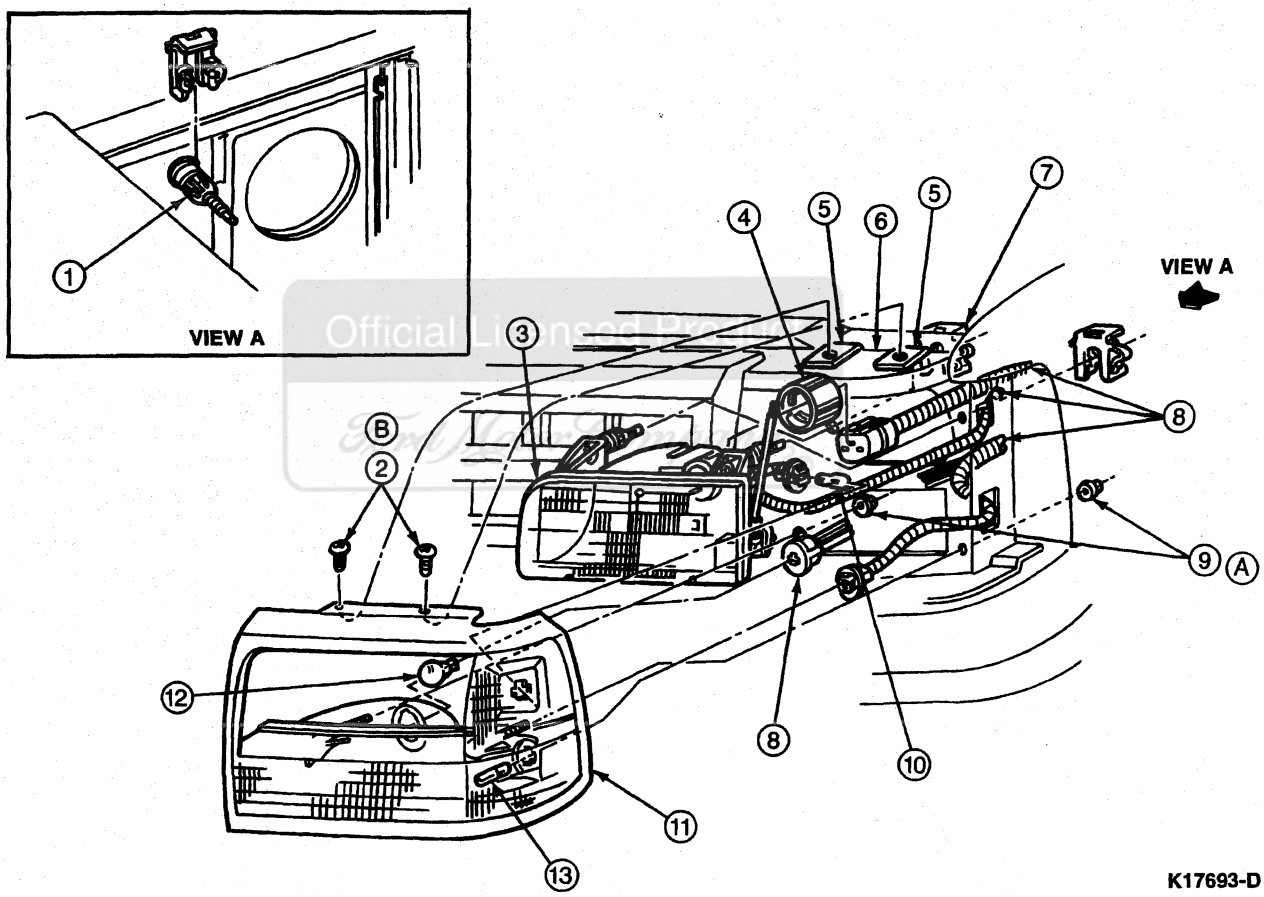

K17693-D

Item	Part Number	Description
1	—	Adjusting Screw Assy (Part of 13005)
2	N801603	Screw (2 Req'd Each Side)
3	13005	Headlamp Assy
4	13N019	Headlamp Bulb Retainer
5	N806851	J-Nuts (2 Req'd)
6	8A184	Radiator Grill Opening Panel Reinforcement
7	13N020	Headlamp Retainer Clip

(Continued)

Item	Part Number	Description
8	12A581	Wiring Assy
9	N621906	Nut and Washer (2 Req'd)
10	13465	Bulb No. 916NA
11	13064	Headlamp Door
12	13465	Bulb No. 3157
13	13465	Bulb No. 916
A	—	Tighten to 4-7 N·m (36-61 Lb-In)
B	—	Tighten to 1.4-2.3 N·m (13-20 Lb-In)

REMOVAL AND INSTALLATION (Continued)

Lamps, Parking, Rear Lamp, F-250 Heavy Duty, F-350 Styleside Pickup

Lamp Assembly

Removal

1. Remove the screws retaining lamp lens assembly to the vehicle. Pull lamp lens away from vehicle.
2. Turn the socket with the burned out or broken miniature bulb (13465) counterclockwise out of housing.
3. Remove miniature bulb from the socket by firmly grasping the miniature bulb and pulling straight out.

Installation

1. Replace miniature bulb by pushing socket until a snap is heard.
2. Install socket into lamp and turn clockwise until it locks.
3. NOTE: If lamp body or lens is damaged, replace entire lamp assembly. Lens and body are not serviced separately.

   Install lamp lens and retaining screws to vehicle.

Lamps, Parking, Rear Lamp, F-250 Heavy Duty, F-350 Styleside

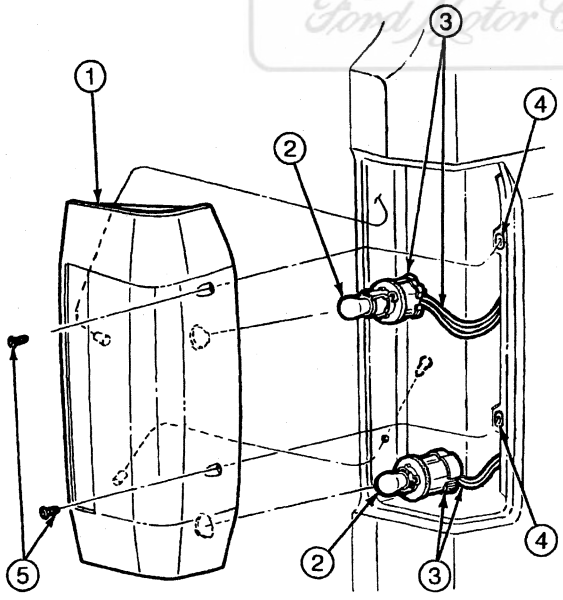

RH REAR LAMP SHOWN
LH REAR LAMP SYMMETRICALLY OPPOSITE

K3961-K

Item	Part Number	Description
1	13404	Rear Lamp (RH)
2	13465	Miniature Bulb (2 Req'd)

(Continued)

Item	Part Number	Description
3	13A409	Wiring Assy
4	383356	Nut (4 Req'd)
5	56000	Screw (4 Req'd)

Exterior Lamp Bulb Socket

Removal

1. To remove rear lamp socket, follow Lamps, Parking, Rear Lamp removal procedure in this section.
2. To remove the socket, turn the socket then pull away from the lamp lens assembly.

Installation

1. Follow removal procedure in reverse order.

Lamps, Parking, Rear Lamp, F-250 Heavy Duty, F-350 4x2 and F-Super Duty Chassis Cab

Lamp Assembly

Removal

1. To replace the rear lamp (13404), remove the two nuts from the mounting studs.
2. Disconnect the two connectors (red-black stripe wire and wire with green insulator) inside the frame side rail.
3. Unhook the wires from the retaining clip and pull the wires out.

Installation

1. Insert the studs of the replacement lamp body into the holes of the lamp mounting bracket.
2. Tighten the stud nuts to 16-27 N·m (12-20 lb-ft).

Official Licensed Product
Ford Motor Company

REMOVAL AND INSTALLATION (Continued)

Lamps, Parking, Rear Lamp, F-250 Heavy Duty, F-350 4x2 and F-Super Duty Chassis Cab

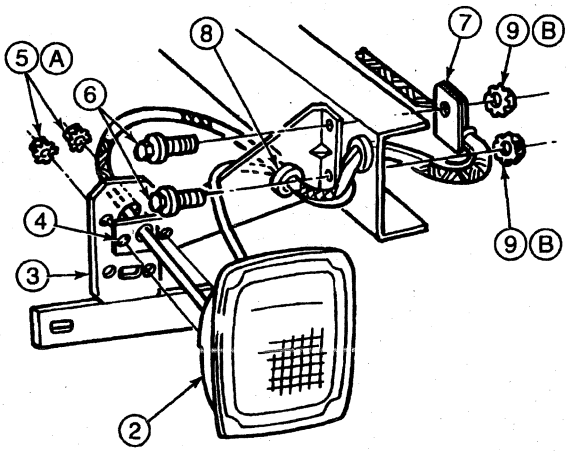

LH REAR LAMP

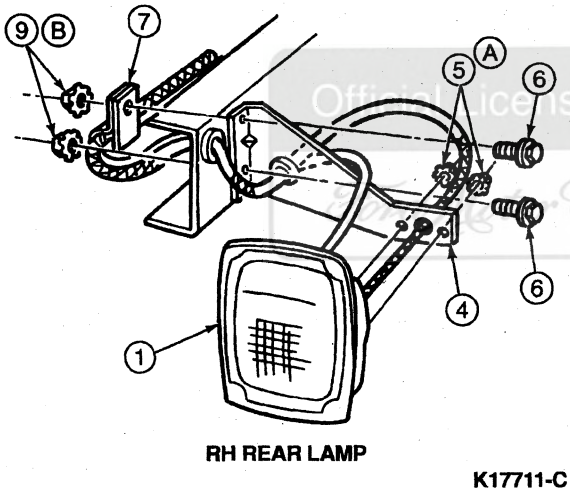

RH REAR LAMP

K17711-C

Item	Part Number	Description
1	13404	Rear Lamp (RH)
2	13405	Rear Lamp (LH)
3	13406	Rear License Plate Bracket
4	13406	Rear License Plate Bracket
5	34659	Nut and Washer (4 Req'd)
6	55633	Bolt (4 Req'd)
7	353473	Clip (2 Req'd)
8	N805391	Grommet (4 Req'd)
9	34661	Nut and Washer (4 Req'd)
A	—	Tighten to 4-9 N·m (36-80 Lb-In)
B	—	Tighten to 16-27 N·m (12-20 Lb-Ft)

Lamps, Parking, Rear Lamp, F-250 4x4 Chassis Cab

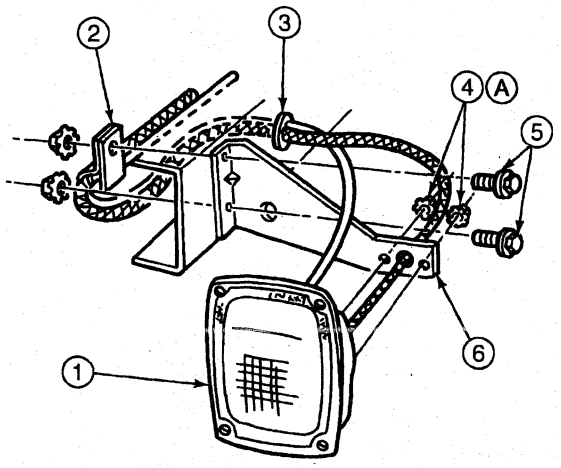

RH REAR LAMP

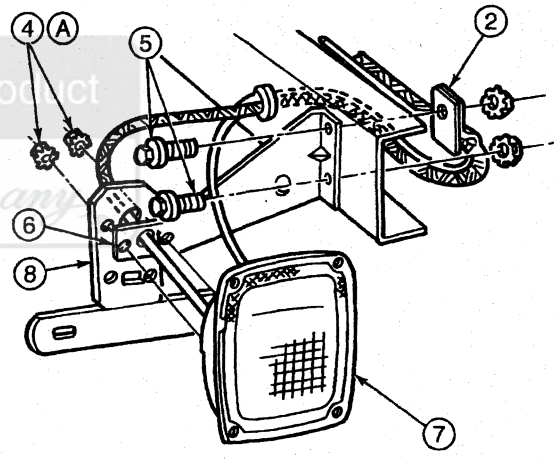

LH REAR LAMP

K17713-C

Item	Part Number	Description
1	13404	Rear Lamp (RH)
2	353473	Clip (2 Req'd)
3	N805391	Grommet (4 Req'd)
4	34659	Nut and Washer (4 Req'd)
5	55653	Bolt (4 Req'd)
6	13406	Rear License Plate Bracket
7	13405	Rear Lamp (LH)
8	13406	Rear License Plate Bracket
A	—	Tighten to 4-9 N·m (36-80 Lb-Ft)

Official Licensed Product

REMOVAL AND INSTALLATION (Continued)

Rear Identification Lamps, F-250 Heavy Duty, F-350 with Dual Rear Wheels

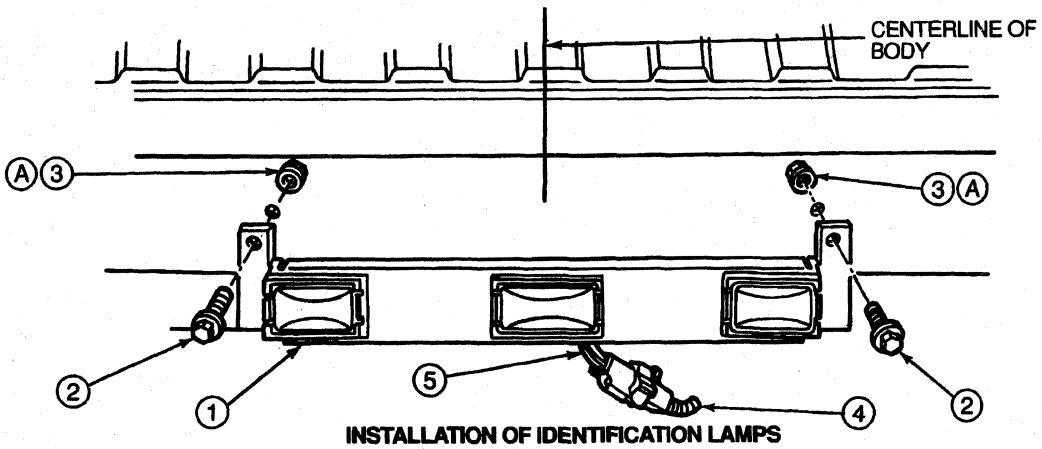

INSTALLATION OF IDENTIFICATION LAMPS K17715-E

Item	Part Number	Description
1	15425	Marker Lamp and Bracket
2	N605892	Bolt (2 Req'd)
3	N621906	Nut (2 Req'd)

(Continued)

Item	Part Number	Description
4	13A409	Wiring Assy
5	15A411	Wiring Assy
A	—	Tighten to 9-14 N·m (80-124 Lb-In)

Ford Licensed Product
Ford Motor Company

Bulb

The miniature bulb (13465) in the rear lamp can be replaced by removing the lens retaining screws and pulling lens away from vehicle.

Lamps Parking/Turn Signal/Side Marker

Refer to Lamps, Parking in the Removal and Installation portion of this section for the procedure for front and rear lamps.

Lamps, Side Marker, Rear Lamp, F-350 Styleside With Dual Rear Wheels

Lamp Assembly

Removal

1. NOTE: The side marker lamp assembly must be replaced if the miniature bulb is damaged.

   Using a small flat blade screwdriver, carefully pry the side marker lamp out of the lamp housing.
2. Disconnect the electrical connector from the side marker lamp.

Installation

1. Follow removal procedure in reverse order.

Lamp Housing

Removal

1. Using a Phillips screwdriver, remove the two lamp housing retaining screws.
2. Pull the lamp housing from the fender.

Installation

1. Follow removal procedure in reverse order.

REMOVAL AND INSTALLATION (Continued)

Rear Marker Lamp, F-350 Styleside and Dual Rear Wheels

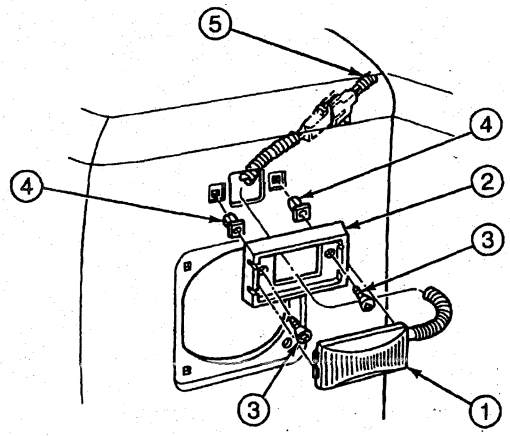

LH REAR MARKER LAMP SHOWN, RH REAR MARKER LAMP SYMMETRICALLY OPPOSITE

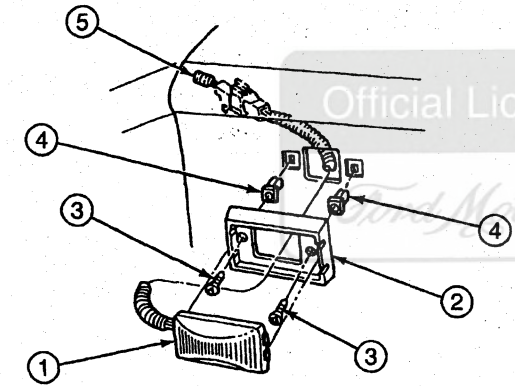

LH FRONT MARKER LAMP SHOWN, RH FRONT MARKER LAMP SYMMETRICALLY OPPOSITE

K17717-C

Item	Part Number	Description
1	15C400	Lamp and Wiring Assy
2	15B436	Bezel Assy (4 Req'd)

(Continued)

Item	Part Number	Description
3	N610128	Screw (8 Req'd)
4	383356	Nut (8 Req'd)
5	15A411	Wiring Assy

Lamp, License Plate, F-250 Heavy Duty, F-350 with Rear Bumper

Lamp Assembly

Removal

1. Remove two screws that retain lamp (13550) to rear license plate bracket (13406).
2. Disconnect wiring connector.

Installation

1. Follow removal procedure in reverse order.

Lamp, License Plate, Lamp Socket

Removal

1. Push lamp socket out from behind or pry out from outside.

Installation

1. Push lamp socket into retainer.

Official Licensed Product Ford Motor Company

REMOVAL AND INSTALLATION (Continued)

License Plate Lamp with Rear Bumper

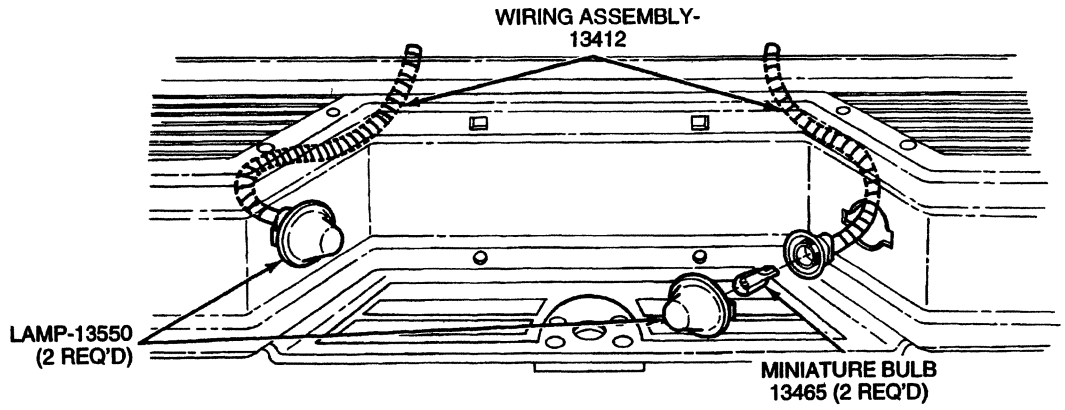

Lamp, License Plate, F-250 Heavy Duty, F-350 Without Rear Bumper

Bulb, Styleside Only

Removal

1. Remove screw retaining rear license lamp cover to assembly.
2. Remove miniature bulb (13465).

Installation

1. Replace with a new miniature bulb.
2. Install retaining screw.

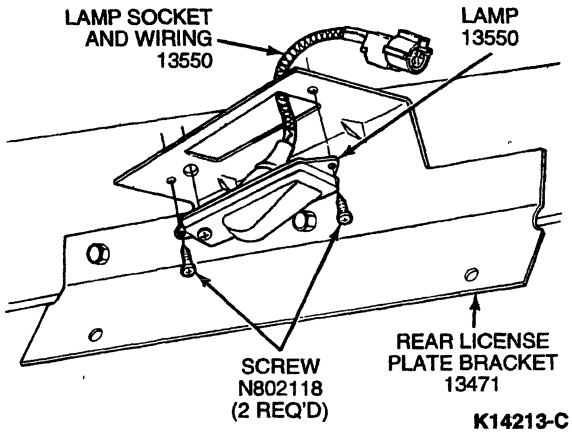

Lamps, Roof Marker

Removal

1. Remove two screws securing marker to roof and lift lamp enough to see electrical connector.
2. Tape wiring assembly to roof of vehicle and disconnect electrical connector.
3. Remove marker lamp from vehicle.

Installation

1. Follow removal procedure in reverse order.

Official Licensed Product
Ford Motor Company

REMOVAL AND INSTALLATION (Continued)

Roof Marker Lamps

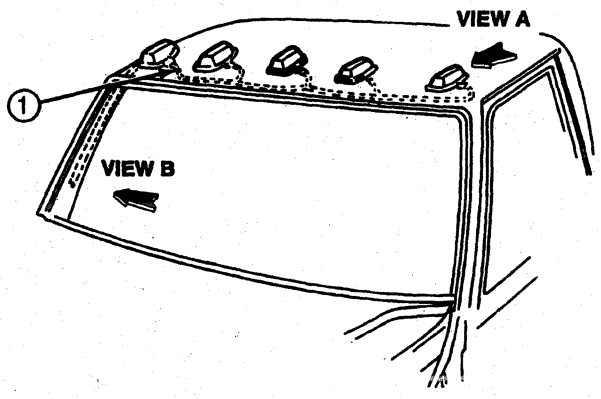

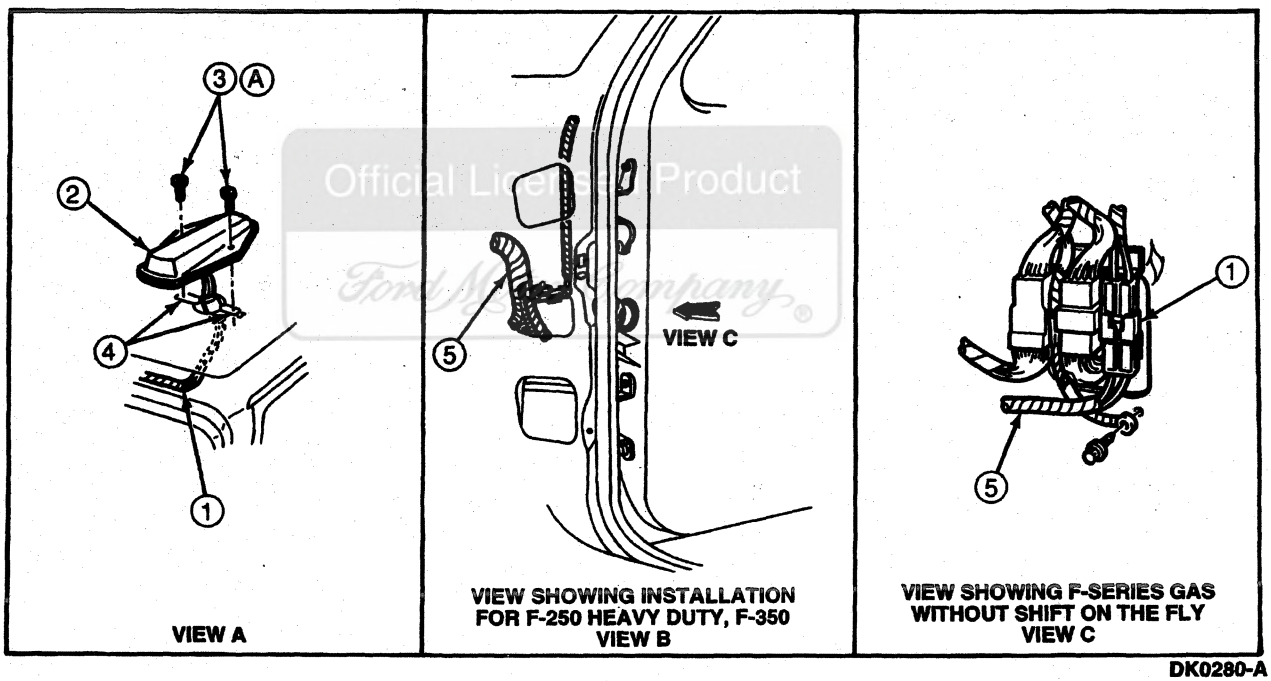

DK0280-A

Item	Part Number	Description
1	15A404	Wiring Assy
2	15442	Roof Marker Lamp Assy
3	55928	Screw

(Continued)

Item	Part Number	Description
4	38814	J-Nut
5	14401	Wiring Assy
A	—	Tighten to 1.6-2.2 N·m (14-19 Lb-In)

Lamp, Rear Hi-Mount

Lamp Assembly

Removal

1. Remove two screws retaining the rear hi-mount lamp (13A613).
2. Pull rear hi-mount lamp away from the top.
3. Disconnect rear hi-mount lamp wiring (13A625) from vehicle wiring.

REMOVAL AND INSTALLATION (Continued)

Installation

1. Follow removal procedure in reverse order.

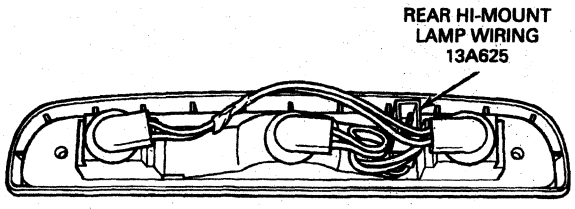

K17725-B

Socket

Removal

1. Remove rear hi-mount lamp as described in Lamp, Rear Hi-Mount in the Removal and Installation portion of this section.
2. NOTE: The lamp sockets are not twisted into rear hi-mount lamp.

   Pull lamp socket and wiring (13410) from rear hi-mount lamp. Note the socket and wiring position in lamp assembly.
3. Replace miniature bulb (13466) by pulling out of lamp socket and wiring.

Installation

1. Follow removal procedure in reverse order.

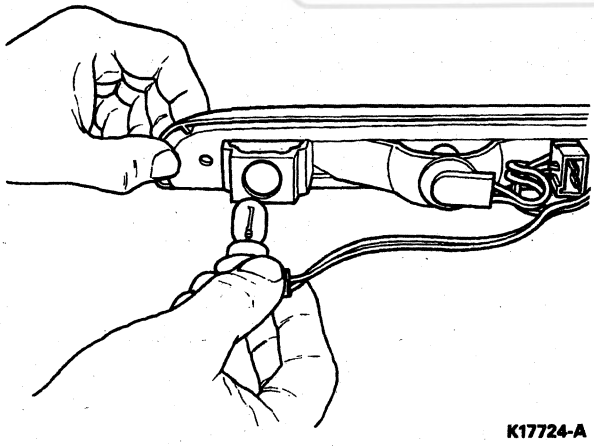

K17724-A

Lamp Assembly, Cargo (Exterior)

The exterior lamp (cargo) is part of the rear hi-mount lamp (13A613). For replacement of miniature bulb (13466) or removal and installation procedures, refer to Lamp, Rear Hi-Mount in the Removal and Installation portion of this section.

Lamp Assembly, Cargo, F-250 Heavy Duty, F-350, F-Super Duty Regular Cab and Crew Cab

To remove the cargo lamp assembly on the F-250 Heavy Duty, F-350 and F-Super Duty vehicles, remove the two screws retaining pillar / dome lamp lens and interior lamp door and remove the lamp assembly. For installation, follow removal procedures in reverse order.

Cargo Lamp

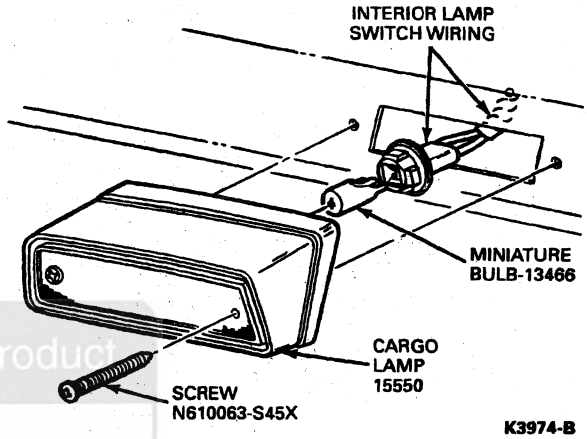

K3974-B

Bulb, High Beam Indicator

Refer to Section 13-01.

Trailer Towing Package Wiring

Vehicles equipped with the trailer towing package have the following additions to support the trailer wiring:

- A set of relays in the engine compartment (F-Series) and connector on the rear lamp wiring (14405), located in the rear bumper area.
- The trailer feed wiring (13A576) is supplied with the vehicle and installed at the time of pre-delivery.
- Vehicles are equipped with a wiring feed, located under the instrument panel, for a trailer brake control unit.

Ford Motor Company Licensed Product

REMOVAL AND INSTALLATION (Continued)

Trailer Tow, F-Series with Bumper

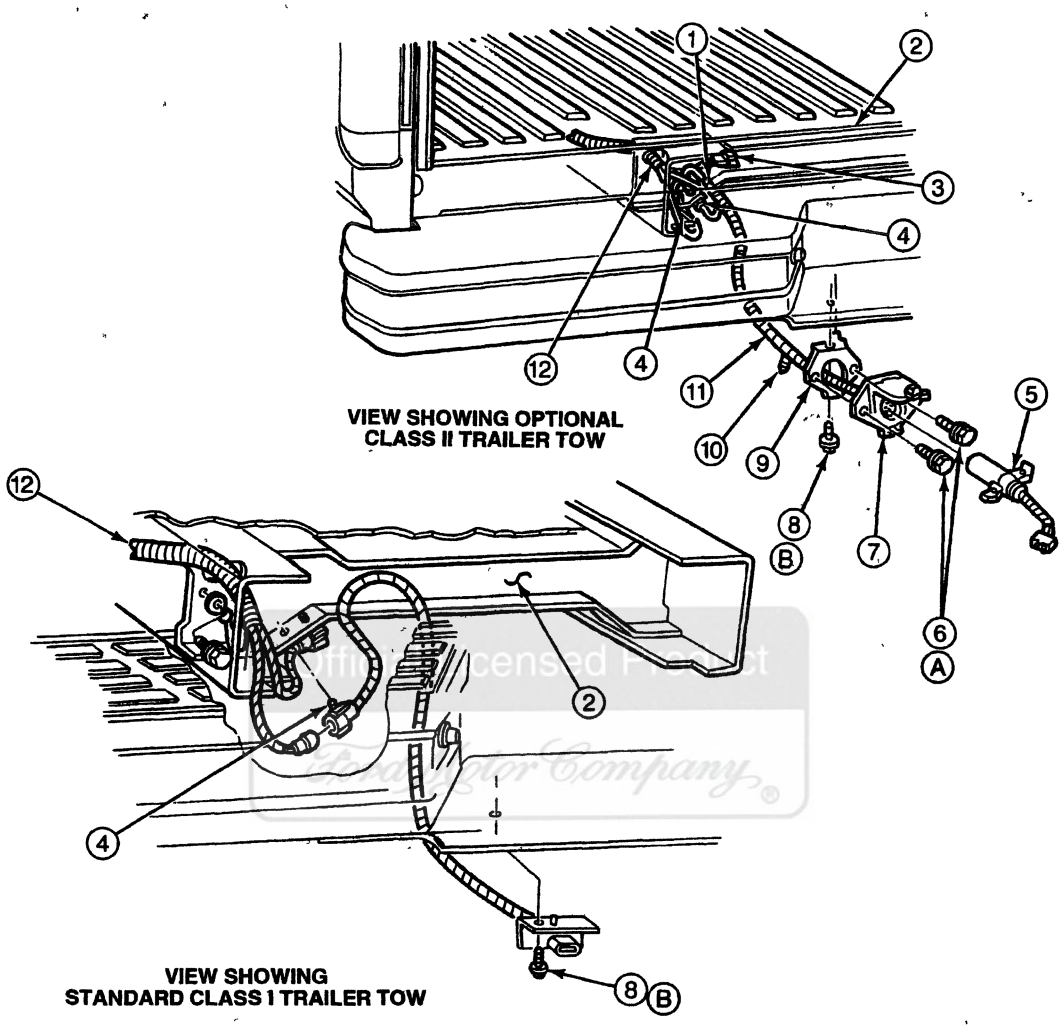

K20785-C

Item	Part Number	Description
1	—	Locator, Place in Hole Provided (Part of 13A576)
2	10610	Rear Crossmember
3	—	To 13A409 Wiring Assy
4	—	Locator, Place in Hole Provided (Part of 14405)
5	—	Hole
6	N60689-S55	Screw (2 Req'd)
7	N801846-S36MG	Screw

(Continued)

Item	Part Number	Description
8	N806820-S55	Tapping Screw
9	14A206-B	Bracket
10	—	Locator
11	13A576-A	Wiring Assy
12	14405	Wiring Assy
A	—	Tighten to 19-20 N·m (14-15 Lb-Ft)
B	—	Tighten to 22-28 N·m (16-21 Lb-Ft)

REMOVAL AND INSTALLATION (Continued)

Trailer Tow, F-Series Without Bumper

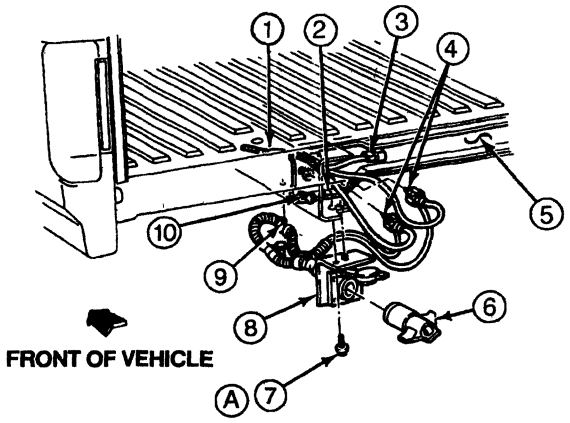

VIEW SHOWING OPTIONAL CLASS II TRAILER TOW

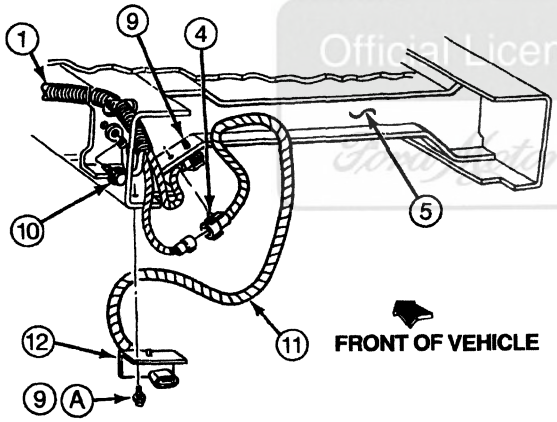

VIEW SHOWING STANDARD CLASS I TRAILER TOW K20784-C

Item	Part Number	Description
1	14405	Wiring Assy
2	—	Hole
3	—	To 13A409 Wiring Assy
4	—	Locator, Place in Hole Provided (Part of 13A576)
5	10610	Rear Crossmember
6	12964-A	Adapter
7	N806820-S55	Tapping Screw
8	13576-B	Wiring Assy
9	—	Locator, Place in Hole Provided (Part of 14405)
10	N801846-S36MG	Screw
11	13A576-A	Wiring Assy
12	14A666-A	End Cap
A	—	Tighten to 22-28 N·m (16-21 Lb-Ft)

ADJUSTMENTS

Headlamp

NOTE: Sagging springs, faulty wheel alignment or improper tracking of the rear axle may affect headlamp aim.

Before making any adjustments on headlamp (13008), perform the following preparatory steps:

1. Remove ice or mud from under fenders.
2. Make sure that all tires are inflated to recommended pressures.

Headlamp Adjustment Shown Without Headlamp Door or Trim Ring, F-250 Heavy Duty and F-350

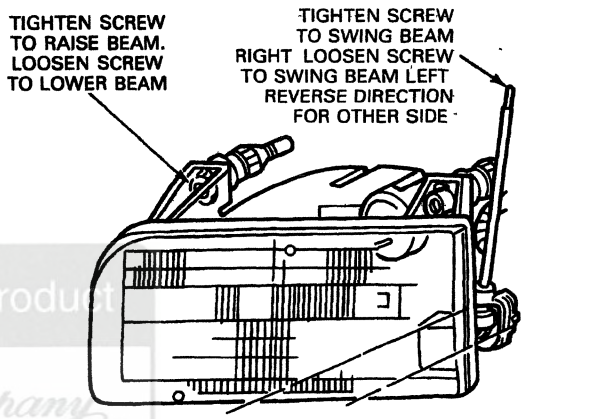

K17692-B

3. Make sure there is no load in the vehicle other than the fuel tank half full.
4. Clean lenses and aiming pads.
5. Check for headlamp bulb (13007) burn-out and proper beam switching.
6. Verify that lamp output is well toward normal new lamp value.
7. Bounce the vehicle and allow to settle.

Perform headlamp aim adjustments with Rotunda Headlamp Aiming Kit 196-00001 or equivalent. To aim the aerodynamically styled headlamps, the adjustable aimer adapters provided in the kit must be used. Adjustment aimer adapter positions are moulded into the bottom edge of the headlamp lens.

Set and lock the adjustable adapters, attach each adapter to its mechanical aimer and aim headlamps per latest instructions in the kit.

The equipment in Rotunda Headlamp Aiming Kit 196-00001 or equivalent can be calibrated to accommodate a slight slope in the floor, making it usable almost anyplace in the garage. However, the area must be reasonably flat.

NOTE: Access holes are provided to allow headlamp adjustment without removing the headlamp door (13064).

Each headlamp is adjusted by means of two screws located under the headlamp door or trim ring.

Official Licensed Product Ford Motor Company

ADJUSTMENTS (Continued)

For sealed-beam lamps, always bring each beam into final position by turning the headlamp adjusting screw (13032) clockwise so that the headlamp will be held against the tension springs when the operation is completed.

SPECIFICATIONS

TORQUE SPECIFICATIONS

Description	N·m	Lb-Ft	Lb-In
Nut and Washer, Headlamp Door	4-7	—	36-61
Screw, Headlamp Door	1.4-2.3	—	13-20
Nut and Washer, Rear Lamp Assembly, F-250 Heavy Duty, F-350 and F-Super Duty Chassis Cab	4-9	—	36-80

(Continued)

TORQUE SPECIFICATIONS (Cont'd)

Description	N·m	Lb-Ft	Lb-In
Stud Nut and Washer, Rear Lamp Bracket	16-27	12-20	—
Nut, Rear Identification Lamp, F-250 Heavy Duty, F-350 with Dual Rear Wheels	9-14	—	80-124
Screw, Marker Lamp	1.6-2.2	—	14-19

SPECIAL SERVICE TOOLS/EQUIPMENT

ROTUNDA EQUIPMENT

Model	Description
105-R0051	73 Digital Multimeter
196-00001	Headlamp Aiming Kit

Official Licensed Product
Ford Motor Company

SECTION 17-02 Lighting, Interior

SUBJECT	PAGE
VEHICLE APPLICATION	17-02-1
DESCRIPTION AND OPERATION	
Instrument Cluster and Panel Lighting	17-02-1
Lamp, Dome	17-02-1
Lamp, Dome/Map Combination	17-02-1
Lamps, Courtesy	17-02-2
Ash Receptacle	17-02-2
Door	17-02-2
Engine Compartment	17-02-2
Glove Compartment	17-02-2
Vanity Mirrors	17-02-2
DIAGNOSIS AND TESTING	
Courtesy Lamps	17-02-2
Component Test	17-02-6
Dome Lamp Switch	17-02-6
Inspection and Verification	17-02-2
Pinpoint Tests	17-02-3
DIAGNOSIS AND TESTING (Cont'd.)	
Symptom Chart	17-02-2
Electrical Schematic Reference(s)	17-02-2
REMOVAL AND INSTALLATION	
Lamp, Ash Receptacle	17-02-9
Lamp, Dome, Housing	17-02-7
Lamp, Dome, Lens	17-02-6
Lamp, Dome/Map Combination, Housing	17-02-7
Lamp, Dome/Map Combination, Lens	17-02-7
Lamp, Engine Compartment	17-02-9
Lamp, Glove Compartment	17-02-8
Lamp, Vanity Mirror	17-02-9
Lamps, Courtesy, Door	17-02-8
Removal	17-02-8
Switch, Courtesy Lamp	17-02-8
SPECIFICATIONS	17-02-9
SPECIAL SERVICE TOOLS/EQUIPMENT	17-02-9

Official Licensed Product
Ford Motor Company

VEHICLE APPLICATION

F-250 Heavy Duty, F-350 and F-Super Duty

DESCRIPTION AND OPERATION

Lamp, Dome

The overhead interior lamp (13776) (dome) is located above the back window glass (42006) on F-250 Heavy Duty, F-350, F-Super Duty Regular Cab and is located on roof trim panel (51968) behind the front seat (60012) on SuperCab vehicles. The Crew Cab is equipped with a front and rear overhead interior lamp. The miniature bulbs (13466) are energized when the headlamp switch knob and shaft (11661) is turned fully counterclockwise.

The dome lamp is also activated by a lamp switch (13713) in the pillar, when the front doors (20124) are opened.

Instrument Cluster and Panel Lighting

Refer to Section 13-00.

Lamp, Dome/Map Combination

Lamp Assembly

The two map lamps are located on each side of the interior lamp door (13788). The map lamps are operated independently of the dome lamp by two switches located at each map lamp housing. The Crew Cab is equipped with a front and rear overhead dome/map lamp.

DESCRIPTION AND OPERATION (Continued)

Lamps, Courtesy

Door

The interior lamps (13776) (courtesy) are located under the door armrests on the right and left sides. These interior lamps are activated by lamp switches (13713) in the pillar when the front doors (20124) are opened, or by turning the headlamp switch knob and shaft (11661) fully counterclockwise.

Engine Compartment

F-250 Heavy Duty and F-350 vehicles can be equipped with an optional compartment lamp (15702). The compartment lamp is mounted to the hood (16612) in the engine compartment. The compartment lamp is activated every time the hood is opened.

Glove Compartment

The glove compartment lamp is activated by opening the glove compartment door (06024).

Vanity Mirrors

The vanity mirrors are located on the sun visors. The miniature lights are activated by lifting the mirror cover.

Ash Receptacle

The ash receptacle lamp is activated by opening the instrument panel ash receptacle (04810).

DIAGNOSIS AND TESTING

Electrical Schematic Reference(s)

Refer to Electrical and Vacuum Troubleshooting Manual, Cell 89, Courtesy Lamps for schematic and connector information.

Official Licensed Product
Ford Motor Company

Courtesy Lamps

Inspection and Verification

1. Verify the vehicle owner's original concern by operating the courtesy lamps to duplicate the condition.
2. Inspect to determine if one of the following mechanical or electrical concerns applies:

VISUAL INSPECTION CHART

Mechanical	Electrical
• Damaged lamps • Damaged switches • Stuck switches	• Open fuses • Damaged bulbs • Circuitry open/shorted • Connectors damaged/corroded

3. If the concern(s) remains after the inspection, determine the symptom(s) and proceed to the following symptom chart.

Symptom Chart

Refer to the Electrical and Vacuum Troubleshooting Manual for the connector numbers in the pinpoint tests.

NOTE: Use Rotunda 73 Digital Multimeter 105-R0051 or equivalent when performing the following pinpoint tests.

COURTESY LAMPS

Condition	Possible Source	Action
Courtesy Lamps Inoperative	• Blown/open fuse. • Damaged switches. • Circuitry open/shorted.	• GO to Pinpoint Test A.
Courtesy Lamps On Continuously	• Damaged switches. • Circuitry shorted.	• GO to Pinpoint Test B.
Dome Lamp Inoperative	• Damaged switch. • Circuitry open/shorted. • Damaged bulb.	• GO to Pinpoint Test C.
One or More Map Lamps Inoperative	• Damaged switch. • Damaged bulb. • Circuitry open.	• GO to Pinpoint Test D.
Engine Compartment Lamp Inoperative	• Circuitry open/shorted. • Damaged bulb. • Damaged switch.	• GO to Pinpoint Test E.
Glove Compartment Lamp Inoperative	• Circuitry open/shorted. • Damaged bulb. • Damaged switch.	• GO to Pinpoint Test F.

DIAGNOSIS AND TESTING (Continued)

COURTESY LAMPS (Continued)

Condition	Possible Source	Action
Glove Compartment Lamp On Continuously	• Circuitry shorted. • Damaged switch.	• GO to Pinpoint Test G.
Vanity Mirror Lamps Inoperative	• Circuitry shorted / open. • Damaged switch. • Damaged fuse.	• GO to Pinpoint Test H.
Vanity Mirror Lamps On Continuously	• Circuitry shorted. • Damaged switch.	• GO to Pinpoint Test J.

Pinpoint Tests

PINPOINT TEST A: COURTESY LAMPS INOPERATIVE

Test Step		Result ▶	Action to Take
A1	CHECK INTERIOR LAMPS FUSE 8 (15A) FOR VOLTAGE		
	• Using Rotunda 73 Digital Multimeter 105-R0051 or equivalent, check voltage at IP Fuse 8 (15A) for voltage. • **Is voltage present?**	Yes ▶	SERVICE open in Circuit 54 (LG / Y) RESTORE vehicle. RETEST system.
		No ▶	GO to **A2**.
A2	CHECK CIRCUIT 54 (LG / Y) FOR SHORT		
	• Remove IP Fuse 8 (15A). • Connect one lead of ohmmeter to a known good ground, connect second lead to output side of IP Fuse 8 (15A). Measure resistance. • **Is resistance 5 ohms or less?**	Yes ▶	SERVICE Circuit 54 (LG / Y) for short to ground. RESTORE vehicle. REPLACE IP Fuse 8 (15A). RETEST system.
		No ▶	REPLACE IP Fuse 8 (15A). RETEST system.

PINPOINT TEST B: COURTESY LAMPS ON CONTINUOUSLY

Test Step		Result ▶	Action to Take
B1	CHECK HEADLAMP SWITCH		
	• With all doors closed, remove the connector C273 from the headlamp switch. • **Do courtesy lamps go out?**	Yes ▶	REPLACE headlamp switch. RESTORE vehicle. RETEST system.
		No ▶	GO to **B2**.
B2	CHECK COURTESY LAMP SWITCHES		
	• Close the doors. • Disconnect courtesy lamp switches one at a time. • **Do courtesy lamps go out when any courtesy lamp switch is disconnected?**	Yes ▶	REPLACE shorted courtesy lamp switch. RESTORE vehicle. RETEST system.
		No ▶	SERVICE battery short in Circuit 53 (BK / LB) or Circuit 55 (BK / PK). RESTORE vehicle. RETEST system.

PINPOINT TEST C: DOME LAMP INOPERATIVE

Test Step		Result ▶	Action to Take
C1	HEADLAMP SWITCH CHECK DOME LIGHT ON		
	• With the headlamp switch in the ON position for the dome light, use a volt-ohmmeter to check for voltage at Pin D2, connector C273, of the headlamp switch. • **Is voltage present at Pin D2?**	Yes ▶	GO to **C2**.
		No ▶	REPLACE headlamp switch. RESTORE vehicle. RETEST system.
C2	CHECK CIRCUIT 53 (BK / LB)		
	• Disconnect dome lamp. • With headlamp switch in the ON position for dome light activation, use a volt-ohmmeter to check Circuit 53 (BK / LB) at the dome light for voltage. • **Is voltage present?**	Yes ▶	GO to **C3**.
		No ▶	SERVICE open in Circuit 53 (BK / LB). RESTORE vehicle. RETEST system.

Ford Motor Company Licensed Product

DIAGNOSIS AND TESTING (Continued)

PINPOINT TEST C: DOME LAMP INOPERATIVE (Continued)

Test Step		Result ▶	Action to Take
C3	CHECK DOME LAMP GROUND		
	• With a volt-ohmmeter, check the dome lamp ground side. • **Is there resistance?**	Yes ▶ No ▶	REPLACE dome lamp. REPLACE dome lamp fixture. RESTORE vehicle. RETEST system.

PINPOINT TEST D: ONE OR MORE MAP LAMPS INOPERATIVE

Test Step		Result ▶	Action to Take
D1	CHECK POWER TO MAP LAMPS		
	• Gain access to Circuit 705 (LG/O) at the map lamp fixture. • Using a volt-ohmmeter, check for battery voltage in Circuit 705 (LG/O) at the map lamps. • **Is battery voltage present?**	Yes ▶ No ▶	GO to **D2**. SERVICE Circuit 54 (LG/Y) or Circuit 705 (LG/O) for open or ground short. RESTORE vehicle. RETEST system.
D2	CHECK MAP LAMP SWITCHES		
	• Remove the miniature bulbs from the map lamp fixture. • Using a volt-ohmmeter, and with the map lamp switch in the ON position, check for battery voltage at each of the map lamps. • **Is voltage present?**	Yes ▶ No ▶	GO to **D3**. REPLACE dome/map lamp. RESTORE vehicle. RETEST system.
D3	CHECK MAP LAMP GROUND		
	• With a volt-ohmmeter, check the ground side of the map lamp fixture. • **Is continuity present?**	Yes ▶ No ▶	REPLACE miniature bulb. RESTORE vehicle. RETEST system. SERVICE map lamp ground. RESTORE vehicle. RETEST system.

Official Licensed Product
Ford Motor Company

PINPOINT TEST E: ENGINE COMPARTMENT LAMP INOPERATIVE

Test Step		Result ▶	Action to Take
E1	CHECK ENGINE COMPARTMENT LAMP SUPPLY		
	• Remove compartment lamp. Refer to Lamp, Engine Compartment, in the Removal and Installation portion of this section. • Using a voltmeter, check Circuit 54 (LG/Y) for voltage. • **Is voltage present?**	Yes ▶ No ▶	GO to **E2**. SERVICE Circuit 54 (LG/Y) or Circuit 705 (LG/O) for open or ground short. RESTORE vehicle. RETEST system.
E2	CHECK ENGINE COMPARTMENT LAMP GROUND		
	• Using an ohmmeter connected to a known good ground, check continuity between Circuit 57 (BK) at compartment lamp and known good ground. • **Is continuity present?**	Yes ▶ No ▶	GO to **E3**. SERVICE Circuit 57 (BK) for open circuit. RESTORE vehicle. RETEST system.
E3	CHECK ENGINE COMPARTMENT LAMP BULB		
	• Remove engine compartment lamp bulb. • Using an ohmmeter, check continuity of bulb. • **Does bulb test OK?**	Yes ▶ No ▶	REPLACE compartment lamp. RESTORE vehicle. RETEST system. REPLACE engine compartment lamp miniature bulb. RESTORE vehicle. RETEST system.

DIAGNOSIS AND TESTING (Continued)

PINPOINT TEST F: GLOVE COMPARTMENT LAMP INOPERATIVE

Test Step		Result ▶	Action to Take
F1	CHECK GLOVE COMPARTMENT LAMP POWER SUPPLY		
	• Disconnect glove compartment lamp connector. • Using a volt-ohmmeter, check Circuit 54 (LG/Y), without remote keyless entry or Circuit 705 (LG/O) with remote keyless entry, for battery voltage. • **Is voltage present?**	Yes ▶ No ▶	GO to **F2**. SERVICE Circuit 54 (LG/Y) or Circuit 705 (LG/O) for open or ground short. RESTORE vehicle. RETEST system.
F2	SWITCH CHECK		
	• With glove compartment open (switch in ON position), remove the miniature bulb. • Check the power side of the lamp fixture for voltage. • **Is voltage present?**	Yes ▶ No ▶	GO to **F3**. REPLACE the glove compartment lamp fixture. RESTORE vehicle. RETEST system.
F3	GROUND SIDE TEST		
	• Using a volt-ohmmeter, check the ground side of the glove compartment lamp assembly. • **Is continuity present?**	Yes ▶ No ▶	REPLACE miniature bulb. RESTORE vehicle. RETEST system. SERVICE glove compartment lamp fixture ground. RESTORE vehicle. RETEST system.

PINPOINT TEST G: GLOVE COMPARTMENT LAMP ON CONTINUOUSLY

Test Step		Result ▶	Action to Take
G1	GLOVE COMPARTMENT SWITCH CHECK		
	• Remove the miniature bulb. • Place the glove compartment switch in the OFF position. • Using a volt-ohmmeter, check to see if there is voltage on the power side of the glove compartment lamp fixture for voltage. • **Is voltage present?**	Yes ▶ No ▶	REPLACE the glove compartment lamp fixture. RESTORE vehicle. RETEST system. System OK.

Official Licensed Product Ford Motor Company

PINPOINT TEST H: VANITY MIRROR LAMPS INOPERATIVE

Test Step		Result ▶	Action to Take
H1	CHECK VANITY MIRROR LAMPS SUPPLY		
	• Remove vanity mirror lamp assembly. • Disconnect vanity mirror. • Using a voltmeter, check Circuit 54 (LG/Y), without remote keyless entry or Circuit 54 (LG/Y) and Circuit 705 (LG/O) with remote keyless entry, for voltage. • **Is voltage present?**	Yes ▶ No ▶	GO to **H2**. SERVICE Circuit 54 (LG/Y) or Circuit 705 (LG/O) for open or ground short. RESTORE vehicle. RETEST system.
H2	CHECK VANITY MIRROR LAMPS GROUND		
	• Remove vanity mirror lamp bulb. • Using an ohmmeter connected to a known good ground, check ground side of bulb socket for continuity. • **Is continuity present?**	Yes ▶ No ▶	GO to **H3**. SERVICE open ground circuit. RESTORE vehicle. RETEST system.
H3	CHECK VANITY MIRROR LAMP BULB		
	• Using an ohmmeter, check continuity of bulb. • **Is continuity present?**	Yes ▶ No ▶	REPLACE vanity mirror assembly. RESTORE vehicle. RETEST system. REPLACE vanity mirror lamp bulb. RESTORE vehicle. RETEST system.

DIAGNOSIS AND TESTING (Continued)

PINPOINT TEST J: VANITY MIRROR LAMPS ON CONTINUOUSLY

Test Step		Result	Action to Take
J1	VANITY MIRROR LAMPS ON CONTINUOUSLY		
	• Disconnect Circuit 54 (LG/Y) to affect vanity mirror. • With the switch in the OFF position and using a volt-ohmmeter, check continuity from Circuit 54 (LG/Y) to the output side of the switch. • **Is continuity present?**	Yes ▶ No ▶	SERVICE the vanity mirror switch. RESTORE vehicle. RETEST system. System OK.

Component Test

Dome Lamp Switch

WARNING: REMOVE ALL POWER FROM THE WIRING BEFORE PERFORMING THE FOLLOWING TESTS.

NOTE: Use Rotunda 73 Digital Multimeter 105-R0051 or equivalent when performing the following tests.

- The dome lamp switch is part of the headlamp switch. Component testing procedures determine whether or not a component is operating properly.
- The component wiring connector must be removed before testing. To test a single circuit, select the proper test in the component test procedure.
- To test the complete component, perform each of the tests.

Licensed Product Ford Motor Company

COMPONENT TESTING PROCEDURE

To Test	Connect Self-Powered Test Lamp or Ohmmeter to Terminals	Move Switch to These Positions	A Good Switch Will Indicate
Headlamp Circuit	38 (BK/O) B1 and 15 (R/Y) H	Off Park Head	Open Circuit Open Circuit Closed Circuit
Park Lamp Circuit	195 (T/W) B2 and 14 (BR) R	Off Park Head	Open Circuit Closed Circuit Closed Circuit
Dome Light Circuit	54 (LG/Y) D1 and 55 (BK/PK) D2 706 (GY) D2	Knob Rotated Fully Counterclockwise (in Detent) Knob Rotated Fully Clockwise (out of Detent)	Closed Circuit Open Circuit
Panel Light Dimmer Circuit	137 (Y/BK) IGN and 294 (W/LB) I	Knob Rotated Counterclockwise from Full Clockwise Position	Ohmmeter Will Show Smoothly Decreasing Resistance to Approx. 11 ohms Max.
Ignition On, Lamps Off Circuit	137 (Y/BK) IGN and 484 (O/BK) DN	Off Park Head	Closed Circuit Open Circuit Open Circuit
Cluster Dimmer Circuit	294 (W/LB) I and 484 (O/BK) DN	Off Park Head	Open Circuit Closed Circuit Closed Circuit

REMOVAL AND INSTALLATION

Lamp, Dome, Lens

Removal

1. Carefully pry the pillar / dome lamp lens (13783) at the corners from the housing.

Installation

1. Align pillar / dome lamp lens with housing and carefully push pillar / dome lamp lens into housing.

REMOVAL AND INSTALLATION (Continued)

Lamp, Dome, Housing

Removal

1. Carefully pry the pillar / dome lamp lens (13783) at the corners from the housing.
2. Remove miniature bulbs (13466) from retainer.
3. Remove three screws retaining interior lamp body (13786).
4. Disconnect courtesy or interior lamp switch wiring (13A709).
5. Remove interior lamp body.

Installation

1. Follow removal procedure in reverse order.
2. Tighten screws to 1.8-2.6 N·m (16-23 lb-in).

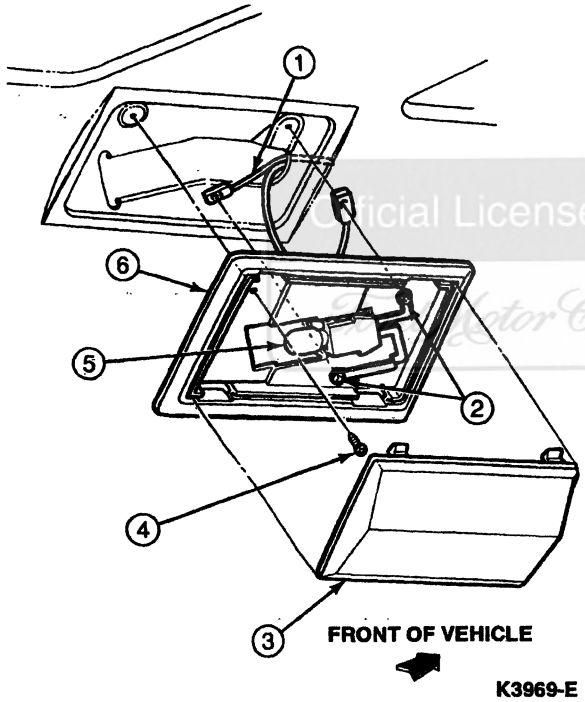

K3969-E

Item	Part Number	Description
1	14334	Wiring Assy
2	13376	Screw
3	13783	Pillar / Dome Lamp Lens
4	52814	Screw
5	13466	Miniature Bulb
6	13786	Interior Lamp Body

Lamp, Dome / Map Combination, Lens

Removal

1. Carefully pry pillar / dome lamp lens (13783) from interior lamp body (13786).

Installation

1. Align pillar / dome lamp lens with interior lamp body and carefully push pillar / dome lamp lens into interior lamp body.

Lamp, Dome / Map Combination, Housing

Removal

1. Carefully pry pillar / dome lamp lens (13783) from interior lamp body (13786).
2. Remove screws retaining interior lamp (13776) (dome / map) to roof trim panel (51968).
3. Disconnect courtesy or interior lamp switch wiring (13A709) from lamp socket.
4. Remove interior lamp (dome / map) from roof trim panel.

Installation

1. Follow removal procedure in reverse order.

Dome / Map Lamp

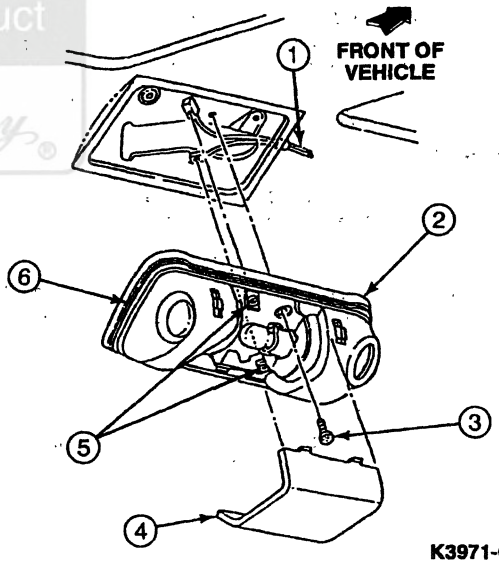

K3971-G

Item	Part Number	Description
1	14334	Wiring Assy
2	13376	Gasket
3	52814	Screw
4	13783	Pillar / Dome Lamp Lens
5	13376	Screw
6	13776	Interior Lamp (Dome)

Official Licensed Product

REMOVAL AND INSTALLATION (Continued)

Lamps, Courtesy, Door

Removal

1. Use a thin, flat-bladed screwdriver placed into a notch at the front edge of the courtesy lamp lens, then gently pry rearward and up to remove the courtesy lamp lens.
2. Remove the miniature bulb (13466).

Installation

1. Replace bulb and position rear edge of the courtesy lamp lens into the housing and snap into place.

Switch, Courtesy Lamp

Removal

1. Unscrew the hex sleeve nut from the pillar.
2. Extract the lamp switch (13713) and pull the main wiring (14401) off the lamp switch.

   Retention of lamp switch to the main wiring is by one of three tabs positioned 120 degrees apart on the lamp switch. If, when the lamp switch is disconnected from the main wiring, the engaged locking tab breaks off, the lamp switch must be rotated 120 degrees to engage a new tab. If all three tabs have been broken, the lamp switch must be replaced.

Installation

1. To install the lamp switch in the pillar, pull the main wiring through the mounting hole in the pillar.
2. Install lamp switch to the main wiring.
3. Twist the main wiring and lamp switch 4-1/2 turns counterclockwise and push the main wiring back through the mounting hole.
4. Screw the main wiring clockwise into the pillar until seated.
5. Close and open the door to make sure interior lamp (13776) is operating properly.

Courtesy Lamp Switch

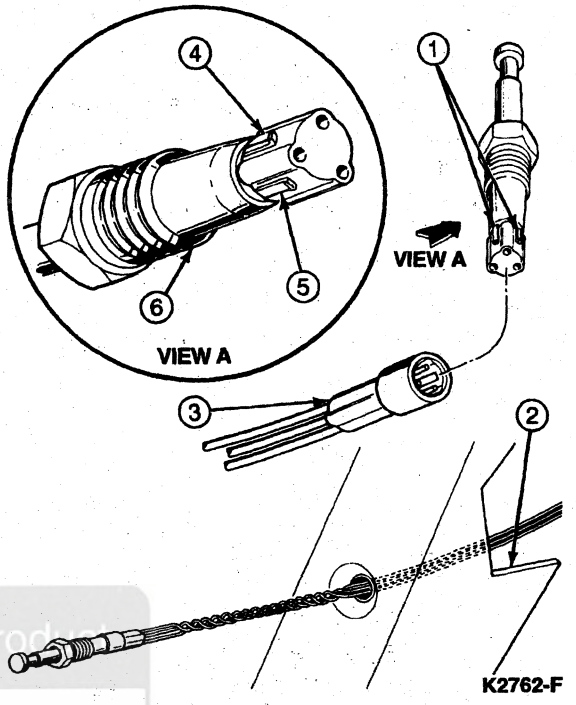

Item	Part Number	Description
1	—	Tabs Exposed Show Locking Portion Damaged
2	02500	Door Pillar
3	—	Connector Wiring (Part of 14401)
4	—	Locking Tab (Undamaged) (Part of 13713)
5	—	Locking Tab (Damaged) (Part of 13713)
6	—	Self-Threaded Nut (Part of 13713)

Lamp, Glove Compartment

Removal

1. Open glove compartment door (06024).
2. Remove the one screw retaining the lamp/striker assembly to the instrument panel (04320).
3. Pull the lamp/striker assembly down and disconnect the wiring connector.

Installation

1. Connect the wiring connector to the lamp/striker assembly.
2. Position the lamp/striker assembly to the instrument panel and install retaining screw. Do not tighten the screw.

Licensed Product Ford Motor Company

REMOVAL AND INSTALLATION (Continued)

3. Adjust the glove compartment door closed position with the lamp / striker assembly. Tighten lamp / striker assembly retaining screw.

Lamp, Vanity Mirror

Removal

1. Disconnect the battery ground cable (14301).
2. Remove the vanity mirror lamp lens.

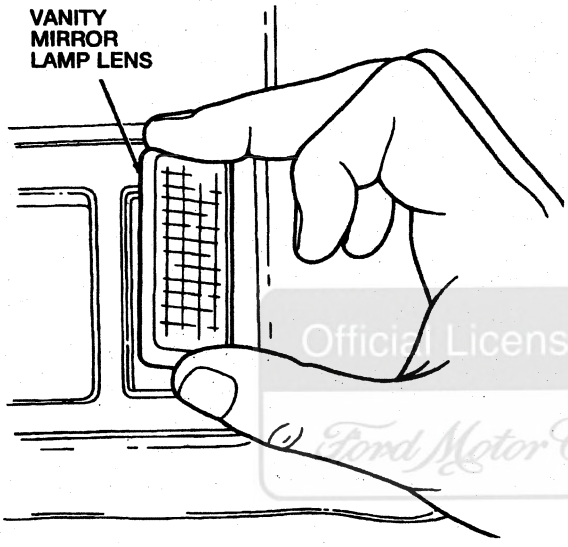

K18976-B

3. Carefully pull the vanity mirror lamp miniature bulb straight out from the socket.

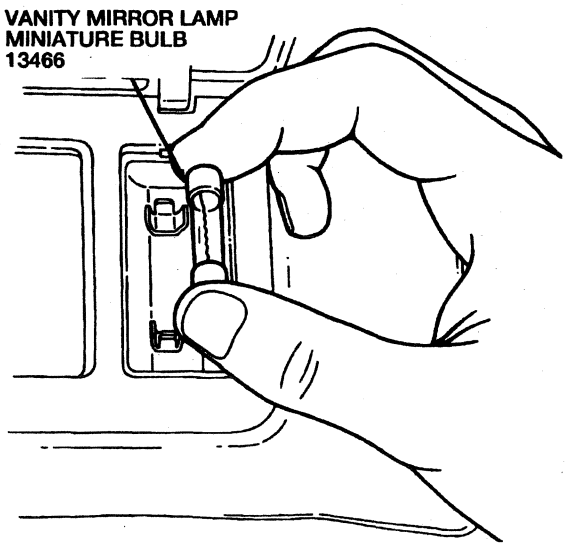

K18489-D

Installation

1. Follow removal procedure in reverse order.

Lamp, Engine Compartment

Removal

1. Disconnect the battery ground cable (14301).
2. Disconnect lead to compartment lamp (15702).
3. Remove screw securing engine lamp housing.

Installation

1. Follow removal procedure in reverse order.

Lamp, Ash Receptacle

Removal

1. Remove instrument panel ash receptacle (04810).
2. Squeeze the lamp housing to disengage from the ash receptacle track.
3. Pull lamp housing from wiring connector / bulb socket.
4. Pull bulb out of the wiring connector / bulb socket.

Installation

1. Follow removal procedure in reverse order.

Official Licensed Product
Ford Motor Company

SPECIFICATIONS

TORQUE SPECIFICATIONS

Description	N·m	Lb-In
Screw, Lamp Body	1.8-2.6	16-23

SPECIAL SERVICE TOOLS / EQUIPMENT

ROTUNDA EQUIPMENT

Model	Description
105-R0051	73 Digital Multimeter

SECTION 17-04 Lamps, Daytime Running

SUBJECT	PAGE
VEHICLE APPLICATION	17-04-1
DESCRIPTION AND OPERATION	
Daytime Running Lamp (DRL) System	17-04-1
DIAGNOSIS AND TESTING	
Daytime Running Lamps	17-04-1
Inspection and Verification	17-04-1
Pinpoint Tests	17-04-2
Symptom Chart	17-04-2
DIAGNOSIS AND TESTING (Cont'd.)	
Electrical Schematic Reference(s)	17-04-1
REMOVAL AND INSTALLATION	
Daytime Running Lamps (DRL) Control Module	17-04-4
Parking Brake Signal Switch	17-04-4
SPECIFICATIONS	17-04-4
SPECIAL SERVICE TOOLS/EQUIPMENT	17-04-4

VEHICLE APPLICATION

F-250 Heavy Duty, F-350 and F-Super Duty (Canadian Vehicles Only)

DESCRIPTION AND OPERATION

Daytime Running Lamp (DRL) System

The daytime running lamp system is designed to turn the high beam headlamps on, with a reduced light output, and without illuminating the high beam indicator lamp in the instrument panel (04320) when the following conditions exist:

- The ignition switch lock cylinder (11582) is in the RUN position.
- The parking brake is fully released.
- The headlamp switch (11654) is in the OFF or PARK position.

Before performing any lighting systems test, check that the battery is fully charged, that battery connections are clean and tight, and that burned out fuses and bulbs have been replaced. The low beam headlamps should operate correctly. If not, refer to Section 17-01. The daytime running lamp module is grounded through the low beam circuit while operating the high beam.

Ford Motor Company Licensed Reproduction

DIAGNOSIS AND TESTING

Electrical Schematic Reference(s)

Refer to Electrical and Vacuum Troubleshooting Manual, Cell 97, Daytime Running Lamps (DRL) for schematic and connector information.

Daytime Running Lamps

Inspection and Verification

1. Verify the vehicle owner's original concern by operating the daytime running lamps to duplicate the vehicle owner's concern.
2. Inspect to determine if one of the following mechanical or electrical concerns apply.

VISUAL INSPECTION CHART

Mechanical	Electrical
• Damaged headlamps • Damaged connectors • Damaged ignition switch • Damaged daytime running lamp control module • Damaged parking brake switch • Damaged headlamp switch • Damaged multi-function switch	• Open instrument panel fuse (10A) • Open power distribution box fuses (15A, 30A) • Circuitry open/shorted

3. If the concern(s) remains after the inspection, determine the symptom(s) and proceed to the following symptom chart.

DIAGNOSIS AND TESTING (Continued)

Symptom Chart

NOTE: Use Rotunda 73 Digital Multimeter 105-R0051 or equivalent to perform electrical pinpoint tests.

Refer to the Electrical and Vacuum Troubleshooting Manual for the connector numbers in the pinpoint tests.

DAYTIME RUNNING LAMPS

Condition	Possible Source	Action
• Daytime Running Lamps Inoperative	• Daytime running lamps control module not installed. • Open or shorted circuitry. • Damaged daytime running lamps control module.	• GO to Pinpoint Test A.
• High Beam Indicator Inoperative	• Damaged miniature bulb. • Open or shorted circuitry.	• GO to Pinpoint Test A.

Pinpoint Tests

PINPOINT TEST A: DRL MALFUNCTION OR DRL INOPERATIVE

Test Step		Result ▶	Action to Take
A1	CHECK HIGH BEAM OPERATION • Key in RUN. • Parking brake fully released. • Headlamp switch off or in the PARK position. • **Are the high beams off?**	Yes ▶ No ▶	GO to **A3**. GO to **A2**.
A2	CHECK HIGH BEAM INTENSITY • Key in RUN. • Parking brake fully released. • Headlamp switch off or in the PARK position. • **Are the high beams on at reduced intensity?**	Yes ▶ No ▶	System is functioning properly. No service required. REPLACE daytime running lamps control module. RESTORE vehicle. RETEST system.
A3	CHECK DAYTIME RUNNING LAMPS CONTROL MODULE INSTALLATION • Key off. • Headlamp switch off. • Check installation of daytime running lamps control module and harness connector C177. • **Is daytime running lamps control module installed and is connector C177 fully seated?**	Yes ▶ No ▶	GO to **A4**. REINSTALL daytime running lamps control module. RESTORE vehicle. RETEST system.
A4	CHECK DAYTIME RUNNING LAMPS CONTROL MODULE POWER • Key off. • Remove daytime running lamps control module. • Check IP fuse panel Fuse 17 (10A) and power distribution box Fuses 3 (30A) and 5 (15A) for an open. • Replace fuse(s) if opened. • Key in RUN. • Parking brake fully released. • Headlamp switch off or in the PARK position. • Multi-function switch in LO beam position. • **Is battery voltage present at Pins 3 and 7 of daytime running lamps control module connector C177 and at Pin 13 of instrument cluster connectors C250 and C251?**	Yes ▶ No ▶	GO to **A5**. SERVICE Circuit 298 (P/O), Circuit 38 (BK/O), or Circuit 640 (R/Y) for open circuit. RESTORE vehicle. RETEST system.

Official Licensed Product Ford Motor Company

DIAGNOSIS AND TESTING (Continued)

PINPOINT TEST A: DRL MALFUNCTION OR DRL INOPERATIVE (Continued)

Test Step		Result ▶	Action to Take
A5	CHECK DAYTIME RUNNING LAMPS CONTROL MODULE PIN 8		
	• With daytime running lamps control module removed, actuate key to RUN. • Headlamp switch in the HEAD position. • Multi-function switch in the HI beam position. • Check for battery voltage at Pin 8 of the daytime running lamps control module connector C177. • **Is battery voltage present?**	Yes ▶ No ▶	GO to **A6**. SERVICE open in Circuit 12 (LG/BK) between headlamps and daytime running lamps control module connector C177. RESTORE vehicle. RETEST system.
A6	CHECK MODULE GROUND		
	• With daytime running lamps control module removed, actuate key to RUN. • Headlamp switch in the HEAD position. • Multi-function switch in the HI beam position. • Check resistance between Pin 6 of the daytime running lamps control module connector C177 and a known good ground. • **Is resistance 1.5 ohms or less?**	Yes ▶ No ▶	GO to **A7**. SERVICE open in Circuit 13 (R/BK) between headlamps and daytime running lamps control module connector C177. RESTORE vehicle. RETEST system.
A7	CHECK DAYTIME RUNNING LAMPS CONTROL MODULE PIN 6		
	• With daytime running lamps control module removed, actuate key to RUN. • Headlamp switch in the HEAD position. • Multi-function switch in the LO beam position. • Check for battery voltage at Pin 6 of the daytime running lamps control module connector C177. • **Is battery voltage present?**	Yes ▶ No ▶	GO to **A8**. SERVICE open in Circuit 13 (R/BK) between headlamps and daytime running lamps control module connector C177. RESTORE vehicle. RETEST system.
A8	CHECK HIGH BEAM INDICATOR		
	• With daytime running lamps control module removed, actuate key to RUN. • Headlamp switch in the HEAD position. • Multi-function switch in the HI beam position. • Jumper Pin 8 to Pin 1 of the daytime running lamps control module connector C177. • **Did high beam indicator illuminate?**	Yes ▶ No ▶	GO to **A9**. REPLACE illumination bulb or SERVICE Circuits 932 (GY/W) or 57 (BK) for an open. RESTORE vehicle. RETEST system.
A9	CHECK PARKING BRAKE SWITCH		
	• With daytime running lamps control module removed, actuate all accessories to the OFF position. • Check continuity of the parking brake switch between Pin 4 of the daytime running lamps control module connector C177 and a known good ground. • Apply and release parking brake. • **Is resistance less than 1.5 ohms with parking brake applied and is resistance infinite with the parking brake released?**	Yes ▶ No ▶	GO to **A10**. SERVICE ground connection at parking brake switch, or SERVICE Circuit 162 (LG/R) for an open or a short, or REPLACE parking brake switch. RESTORE vehicle. RETEST system.
A10	RECHECK DAYTIME RUNNING LAMPS CONTROL MODULE		
	• Reinstall daytime running lamps control module. • Key in RUN. • Parking brake fully released. • Headlamp switch off or in the PARK position. • Multi-function switch in the LO beam position. • **Are the high beams on at reduced intensity?**	Yes ▶ No ▶	System is functioning properly. No service required. REPLACE daytime running lamps control module. RESTORE vehicle. RETEST system.

Licensed Product Ford Motor Company

REMOVAL AND INSTALLATION

Daytime Running Lamps (DRL) Control Module

Removal

1. Remove screw retaining daytime running lamps control (15A272) to radiator support (16138).
2. Disconnect daytime running lamps control electrical connector.
3. Remove daytime running lamps control.

Installation

1. Follow removal procedure in reverse order.
2. Tighten retaining screw to 2.6-3.2 N·m (23-28 lb-in).

Daytime Running Lamps Control

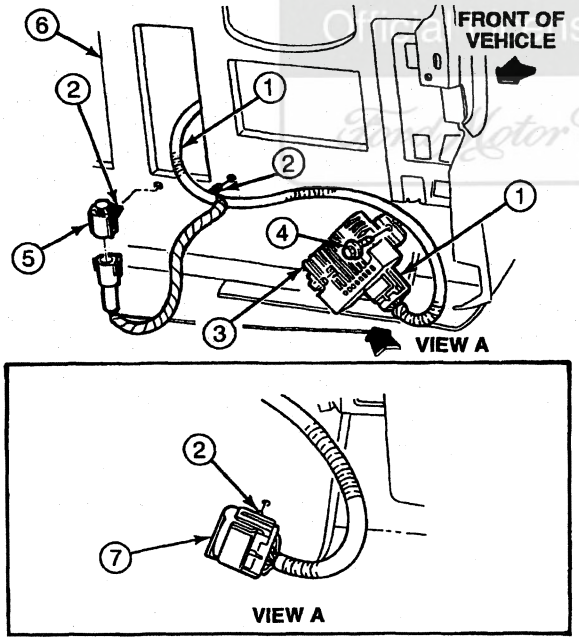

Item	Part Number	Description
1	12A581	Wiring Assembly
2	—	Locator (Part of 12A581)

(Continued)

Item	Part Number	Description
3	15A272	Daytime Running Lamps Control
4	N610957	Screw
5	14666	Ambient Temperature Sensor Delete Cap
6	15422	Front End Air Seal
7	14A624	Daytime Running Lamps Control Delete Cap

Parking Brake Signal Switch

Removal

1. Disconnect electrical hardshell connector from parking brake signal switch (located on parking brake foot-operated assembly).
2. Remove one screw retaining parking brake signal switch to parking brake foot-operated assembly and remove parking brake signal switch.

Installation

1. Position parking brake signal switch on parking brake foot-operated assembly.
2. Install retaining screw.
3. Connect electrical hardshell connector.
4. Check system for proper operation.

SPECIFICATIONS

TORQUE SPECIFICATIONS

Description	N·m	Lb-in
Screw, Retaining (Daytime Running Lamp Control)	2.6-3.2	23-28

SPECIAL SERVICE TOOLS/EQUIPMENT

ROTUNDA EQUIPMENT

Model	Description
105-R0051	73 Digital Multimeter

METRICS

BOLT STRENGTH IDENTIFICATION

ENGLISH SYSTEM

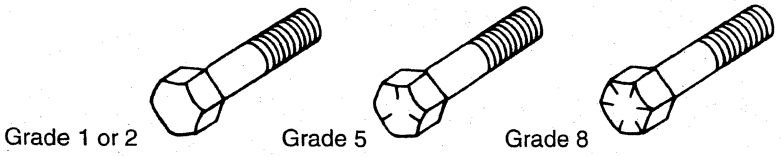

Grade 1 or 2 Grade 5 Grade 8

English bolts: Identification marks on the bolt head represent Rockwell hardness. Generally, the bolt's grade is equal to the number of marks plus two. The higher the grade, the stronger the bolt.

METRIC SYSTEM

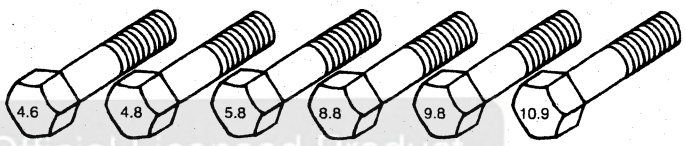

Official Licensed Product
Ford Motor Company

Metric bolts: Identification class numbers on bolt heads represent tensile strength. Higher numbers indicate stronger bolts. Common metric fastener bolt strength properties are 9.8 and 10.9.

HEX NUT STRENGTH IDENTIFICATION

ENGLISH SYSTEM

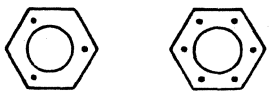

Grade 5 Grade 8

Identification dots represent Rockwell hardness. The nut's grade is equal to the number of dots plus two. The higher the grade, the stronger the nut.

METRIC SYSTEM

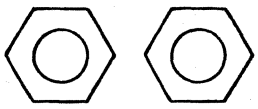

Identification class numbers on nuts represent tensile strength. Higher numbers indicate stronger nuts. Nuts may also have blue finish or paint daub on hex flat.

OTHER TYPES OF PARTS

Metric identification schemes vary by type of part, most often a variation of that used for bolts and nuts. Note that many types of English and Metric fasteners carry no special identification if they are otherwise unique.

–Stamped U-Nuts

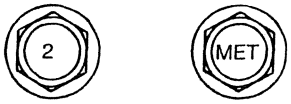

–Tapping, thread forming and certain other case hardened screws.

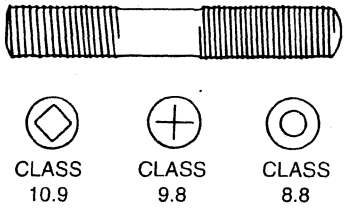

–Studs, Large studs may carry the property class number. Smaller studs use a geometric code on the end.

METRICS

ENGLISH/METRIC CONVERSION

DESCRIPTION	MULTIPLY	BY	FOR METRIC EQUIVALENT
Acceleration	ft/s^2	0.3048	m/s^2
	in/s^2	0.0254	m/s^2
Torque	lb-in	0.11298	N·m
	lb-ft	1.3558	N·m
Power	horsepower	0.746	kW
Pressure or Stress	inches of water	0.2491	kPa
	psi	6.895	kPa
	psi	0.069	bar
Energy or Work	BTU	1055.0	Joules(J)
	lb-ft	1.3558	Joules(J)
	kiloWatt-hour	3,600,000 or 3.6×10^6	Joules(J)
Light	foot candle	10.764	lumens/square meter (lm/m^2)
Fuel Performance	miles/gal	0.4251	kilometers/liter (km/L)
	gal/mile	2.3527	liters/kilometer (L/km)
Velocity	mph	1.6093	kilometers/hour (km/h)
Length	inch	25.4	mm
	foot	0.3048	m
	yard	0.9144	m
	mile	1.609	km
Area	square inch (in^2)	645.2	mm^2
		6.45	cm^2
	square ft (ft^2)	0.0929	m^2
	square yard	0.8361	m^2
Volume	cubic inch (in^3)	16387.0	mm^3
		16.387	cm^3
		0.0164	liters (L)
	quart	0.9464	liters (L)
	gallon	3.7854	liters(L)
	cubic yard	0.7646	m^3
Mass	pound	0.4536	kg
	ton	907.18	kg
	ton	0.9078	tonne (t)
Force	kilogram	9.807	N
	ounce	0.2780	N
	pound	4.448	N
Temperature	degree Farenheit (°F)	(°F-32) 0.556	degree Celsius (°C)

Official Licensed Product
Ford Motor Company

TORQUE SPECIFICATIONS

A. The following torque ranges are to be used for fitting and fastener diameters as indicated.

NOTE: 1) All finishes are S-2.
2) Bolt and nut specifications apply to both fine and coarse threads.

Diameter	Grade	N·m	Lb-Ft	Lb-In
1/4 Inch	5	10-13	—	89-115
5/16 Inch	5	17-23	12-17	—
3/8 Inch	8	43-56	32-41	—
7/16 Inch	8	68-95	50-70	—
1/2 Inch	8	102-142	75-105	—
9/16 Inch	8	149-203	110-150	—
5/8 Inch	8	204-277	150-205	—
3/4 Inch	8	299-406	220-300	—
7/8 Inch	8	489-650	360-480	—
1-0 Inch	8	733-989	540-730	—

B. Hydraulic brake system tube nuts

Thread Size	N·m	Lb-Ft
7/16-24	17-23	12-17
1/2-20	17-23	12-17

C. Power steering system hydraulic hose fittings and tube nuts

Thread Size	N·m	Lb-Ft
9/16-18	27-39	20-29
3/4-16	43-56	32-41
7/8-14	43-56	32-41

D. Hose clamps — worm gear type (with liner)

Hose OD	Installation Torque Range		Uniform Quality Audit Torque Minimum	
Inches	N·m	Lb-In	N·m	Lb-In
0.31-0.87	1.0-1.5	9-13	0.45	4
0.88-1.75	3.5-4.5	30-40	1.0	10
1.76-4.50	3.5-4.5	30-40	1.70	15
5.50-7.50	2.25-3.5	20-30	1.0	10

E. Oil filter system hose fitting and tube nuts

Thread Size	N·m	Lb-Ft
5/8–18	17–23	12–17

F. Fuel line system

1. Thermo plastic hose tube nuts

Thread Size	N·m	Lb-Ft	Lb-In
7/16-24	10-13	—	89-115
17/32-24	17-23	12-17	—
11/16-20	34-45	25-33	—
1-18	52-68	38-50	—

2. Steel tubing tube nuts for inverted flare fittings

Thread Size	N·m	Lb-Ft
1/2-20	17-23	12-17
5/8-18	27-39	20-29
3/4-18	27-39	20-29
1-1/16-16	43-56	32-41

3. SAE 37-degree and 45-degree flare fittings and hose couplings

Thread Size	N·m	Lb-Ft
9/16-18	17-23	12-17
5/8-18	17-23	12-17
3/4-16	27-39	20-29
7/8-14	43-56	32-41
1-1/16-14	43-56	32-41

Licensed Product

TORQUE SPECIFICATIONS

G. Air brake system fittings

1. SAE 45-degree swivel nut flex hose connectors (for jounce hose, wire braid hose and Teflon®/stainless steel hose)

Thread Size	N·m	Lb-Ft	Lb-In
7/16-20	10-13	—	89-115
5/8-18	17-23	12-17	—
3/4-16	27-39	20-29	—
7/8-14	43-56	32-41	—
1 1/16-14	43-76	32-56	—
1 5/16-14	129-142	95-105	—
1 5/8-14	172-190	127-140	—

2. Copper tubing tube nuts

Thread Size	N·m	Lb-Ft	Lb-In
7/16-24	10-13	—	89-115
17/32-24	17-23	12-17	—
11/16-20	27-39	20-29	—
13/16-18	43-56	32-41	—

3. For 5/8-inch Teflon® hose assemblies

Assembly Type	N·m	Lb-In
45-Degree Swivel End	70-76	620-680
Copper Compression Tube	34-45	300-400

Official Licensed Product

4. Thermo-plastic (nylon) tube assembly compression fitting tube nuts

Tube Size	Thread Size	Assembly Torque			Minimum Audit Torque		
Inch		N·m	Lb-Ft	Lb-In	N·m	Lb-Ft	Lb-In
1/4	7/16-24	5.4-11	—	48-96	4.75	—	42
3/8	11/17-24	11-17	8-13	—	10	—	89
1/2	11/16-20	16-27	12-20	—	15	11	—
5/8	13/16-18	34-47	25-35	—	26	19	—
3/4	1-8	43-56	32-41	—	30	22	—

H. The following torque ranges are to be used for fastener diameters as indicated (metric coarse thread).

NOTE: 1) All finishes are S-2.
2) Torque specifications for critical applications should be developed using actual hardware and a statistically valid sample size.
3) All pipe thread fittings are to be tightened minimum two turns past hand-tight. Directional fittings to be oriented by positive tightening only.

Bolt or Nut Diameter	Class	N·m	Lb-Ft	Lb-In
M4	9.8	2.6-3.8	—	23-34
M5	9.8	5.0-8.0	—	44-71
M6	9.8	9-13	—	80-115
M8	9.8	21-32	15-24	—
M10	9.8	40-64	30-46	—
M12	9.8	60-95	44-70	—
M14	9.8	100-150	74-110	—
M16	9.8	155-230	114-170	—

Bolt or Nut Diameter	Class	N·m	Lb-Ft
M6	10.9	11-17	8-12
M8	10.9	28-42	21-31
M10	10.9	54-82	40-60
M12	10.9	80-120	59-88
M14	10.9	130-190	96-140
M16	10.9	200-295	147-217
M20	10.9	395-570	291-420
M24	10.9	685-985	505-726

Alphabetical Index

A

Air Conditioning System, Manual A/C-Heater 12-03A-1
A/C Air Temperature Control 12-03A-45
A/C Compressor 12-03A-23, 12-03A-59
A/C Compressor Drive Belt Tension 12-03A-65
A/C Compressor Pressure Relief Valve 12-03A-23
A/C Compressor Relief Valve 12-03A-65
A/C Condenser Core 12-03A-21, 12-03A-50
A/C Cycling Switch 12-03A-21, 12-03A-48
A/C Evaporator Core 12-03A-20, 12-03A-38
A/C Evaporator Core Housing 12-03A-9, 12-03A-36
A/C Evaporator Core Orifice 12-03A-20, 12-03A-48
A/C Evaporator Housing 12-03A-11
A/C Evaporator/Blower Motor Housing 12-03A-11
A/C Manifold and Tube 12-03A-64
A/C Pressure Cut-Off Switch 12-03A-23, 12-03A-49
A/C Switch 12-03A-9
A/C System Filtering 12-03A-63
A/C Temperature Control Cable 12-03A-65
A/C Vacuum Reservoir Tank and Bracket 12-03A-65
A/C-Heater System, Manual 12-03A-3
Adjustments 12-03A-65
Air Conditioning System, Manual A/C-Heater 12-03A-24
Airflow Control 12-03A-8
Blower Motor Control 12-03A-9
Blower Motor Switch Resistor 12-03A-40
Blower Motor Thermal Limiter 12-03A-9
Cables 12-03A-34, 12-03A-65
Climate Control Assembly 12-03A-7, 12-03A-31
Defroster and Register Ducts 12-03A-11
Demister Nozzle and Duct 12-03A-44
Description and Operation 12-03A-2
Diagnosis and Testing 12-03A-24
Discharge Lines 12-03A-53
Doors 12-03A-45
Ducts 12-03A-43

Air Conditioning System, Manual A/C-Heater (Continued)
Electrical Schematic Reference(s) 12-03A-24
Electrical System 12-03A-13
Function Selector Switch 12-03A-33
Heater Air Plenum Chamber 12-03A-40
Heater and A/C Inlet Duct 12-03A-45
Heater and A/C Inlet Duct Door 12-03A-47
Heater Blower Motor and Blower Motor Wheel Assembly 12-03A-39
Heater Blower Motor Switch 12-03A-33
Heater Blower Motor Switch Resistor 12-03A-9
Heater Core 12-03A-38
Heater Outlet Floor Duct 12-03A-44
Heater Water Hoses 12-03A-54
Heating System 12-03A-6
Illumination Bulbs 12-03A-32
Inspection and Verification 12-03A-24
Instrument Panel 12-03A-36
Instrument Panel Register Assemblies 12-03A-40
Instrument Panel Registers 12-03A-9
Liquid Lines 12-03A-53
Louvers 12-03A-40
Mini-Tube Vacuum Hoses 12-03A-65
Pinpoint Test 12-03A-25
R-134a Refrigerant System 12-03A-2
Refrigerant Lines 12-03A-52
Refrigerant Oil Addition 12-03A-29
Refrigerant System 12-03A-18
Register 12-03A-44
Removal and Installation 12-03A-29
Service Access Gauge Port Valves 12-03A-20
Special Service Tools/Equipment 12-03A-66
Specifications 12-03A-65
Spring Lock Coupling 12-03A-23, 12-03A-30
Suction Accumulator/Drier 12-03A-20, 12-03A-48
Suction Lines 12-03A-52
Switch Knobs 12-03A-33
Symptom Chart 12-03A-24
System Airflow Description 12-03A-13
Temperature Control 12-03A-8
Temperature Control Cable 12-03A-34
Vacuum Control Motors 12-03A-12, 12-03A-47
Vacuum Hoses 12-03A-13
Ventilation System 12-03A-6
Windshield Defroster Door 12-03A-47

Official Licensed Reproduction Ford Motor Company

Alphabetical Index

Antenna.....15-02-1
Antenna 15-02-1
Antenna, Fixed, and Radio Antenna Lead-In Cable 15-02-1
Description and Operation 15-02-1
Diagnosis and Testing 15-02-1
Poor Reception 15-02-1
Removal and Installation 15-02-1
Specifications 15-02-3

Audio Systems, Service.....15-00-1
Antenna Position.....15-00-1
Antennas and Mobility 15-00-2
Audio Systems.....15-00-3
Cassette Tape Player Head..... 15-00-25
Cleaning and Inspection..... 15-00-25
Component Tests 15-00-24
Description and Operation 15-00-1
Diagnosis and Testing 15-00-3
Electrical Schematic Reference(s).....15-00-3
FM Flutter 15-00-2
FM Multi-Path Cancellation 15-00-2
FM Strong Signal Capture and AM Overloading 15-00-2
Ignition Noise 15-00-3
Inspection and Verification 15-00-3
Interfering Noises.....15-00-3
Missing or Damaged Noise Suppression Components 15-00-3
Missing or Poor Grounds 15-00-3
Pinpoint Tests.....15-00-5
Radio Reception.....15-00-1
Radio Tests 15-00-2
Receiving FM Stereo 15-00-2
Sound Distortion, Premium Sound.....15-00-3
Special Service Tools/Equipment 15-00-26
Stereo Indicator Inoperative or Flickering (AM and FM Reception Are OK) 15-00-2
Symptom Charts 15-00-4
Tone Control 15-00-2
Tuning 15-00-2

B

Battery.....14-01-1
Battery 14-01-1
14-01-2

Battery (Continued)
Battery Charging.....14-01-5
Battery Tray.....14-01-5
Description and Operation 14-01-1
Diagnosis and Testing 14-01-1
Environmental Protection.....14-01-1
Removal and Installation 14-01-1
Specifications 14-01-5

Battery and Charging System, Service.....14-00-1
Adjustments..... 14-00-17
Charging System 14-00-1
14-00-2
Component Tests 14-00-14
Description and Operation 14-00-1
Diagnosis and Testing 14-00-2
Drive Belt, Accessory 14-00-17
Electrical Schematic Reference(s).....14-00-2
Generator with Integral Rear Mount Voltage Regulator, Internal Fan Type 14-00-2
Inspection and Verification 14-00-2
Pinpoint Tests.....14-00-5
Special Service Tools/Equipment 14-00-17
Specifications 14-00-17
Symptom Chart 14-00-3

Body Mounting.....02-02-1
Body Insulators 02-02-1
02-02-3
Disassembly and Assembly.....02-02-3
Removal and Installation 02-02-1
Specifications 02-02-3

Body Panels, Front End.....01-02-1
Fender and Apron, Front.....01-02-5
Hood Latch.....01-02-2
Hood Latch Control Handle and Cable.....01-02-3
Installation 01-02-3
Radiator Grille 01-02-1
Radiator Grille Opening Panel Reinforcement.....01-02-9
Removal and Installation 01-02-1
Specifications 01-02-10

Body Service.....01-00-1
Body.....01-00-2
Body Sealant Locations.....01-00-3
Body Sealer Types and Application.....01-00-1
Caulking Cord.....01-00-2

Ford Motor Company Official Licensed Reproduction

Alphabetical Index

Body Service (Continued)
Chemical or Organic Damage Repair 01-00-4
Cleaning and Inspection 01-00-6
Description 01-00-1
Diagnosis and Testing 01-00-2
Drain Holes 01-00-6
Drying Paint Repair Work 01-00-5
Dust and Water Leaks 01-00-3
Floorpan Plugs and Grommets 01-00-6
Inspection and Verification 01-00-2
Liquid Butyl Sealer 01-00-2
Paint Damage from Airborne Materials 01-00-4
Rattle Elimination 01-00-3
01-00-6
Repainting 01-00-5
Respray Sequence, Methodical 01-00-5
Service Procedures 01-00-3
Silicone Lubricant 01-00-2
Special Service Tools/Equipment 01-00-7
Specifications 01-00-6
Symptom Chart 01-00-3
Trim 01-00-6
Weatherstrip Adhesive 01-00-2
Wind Noise 01-00-3

Brake System, Anti-Lock, Rear 06-09-1
Adjustments 06-09-43
Anti-Lock, Rear 06-09-8
Brake Booster, Power 06-09-2
06-09-41
Brake Master Cylinder 06-09-2
06-09-41
Brake Master Cylinder and Brake Fluid Level Switch 06-09-2
Brake Master Cylinder Reservoir Checking and Filling 06-09-43
Brake Master Cylinder With Fluid Level Switch Reservoir 06-09-41
Brake Sensor, Anti-Lock, Rear 06-09-3
Brake System Bleeding 06-09-43
Brake System, Anti-Lock 06-09-2
Brakes, Anti-Lock 06-09-3
Component Location 06-09-4
Control Module, Anti-Lock Electronic 06-09-3
06-09-41
Control Valve, Brake Pressure 06-09-2
Description and Operation 06-09-2
Diagnosis and Testing 06-09-8
Electrical Schematic Reference(s) 06-09-8

Brake System, Anti-Lock, Rear (Continued)
Inspection and Verification 06-09-8
Pinpoint Tests 06-09-15
RABS Sensor 06-09-42
RABS Valve 06-09-3
06-09-42
Removal and Installation 06-09-41
Sensor Indicator, Anti-Lock Brake, Rear 06-09-43
Special Service Tools/Equipment 06-09-44
Specifications 06-09-43
Stoplight Switch 06-09-3
06-09-43
Symptom Chart 06-09-9
System Diode 06-09-7
System Operation Flow Chart 06-09-7

Brake System, Hydraulic 06-06-1
Adjustments 06-06-25
Anti-Lock Brake System Bleeding 06-06-23
Brake Booster to Master Cylinder Push Rod 06-06-26
Brake Fluid Leakage 06-06-24
Brake Hose, Front 06-06-19
Brake Line Replacement 06-06-19
Brake Lines and Hose 06-06-24
Brake Load Sensor Proportioning Valve 06-06-9
06-06-26
Brake Load Sensor Proportioning Valve, F-Super Duty Chassis Cab 06-06-17
Brake Master Cylinder 06-06-5
06-06-19
06-06-24
Brake Master Cylinder Bleeding, Bench 06-06-20
Brake Master Cylinder Bleeding, On-Vehicle 06-06-21
Brake Master Cylinder Fluid Level Sensor 06-06-17
Brake Master Cylinder Reservoir 06-06-16
Brake Master Cylinder Reservoir with Brake Master Cylinder Fluid Level Sensor 06-06-8
Brake Master Cylinder, F-250 Heavy Duty and F-350 06-06-15
Brake Pedal and Bracket, All Except F-Super Duty Motorhome 06-06-11
Brake Pedal and Bracket, F-Super Duty Motorhome 06-06-13
Brake Pedal Linkage, F-Super Duty Motorhome Chassis 06-06-25

Alphabetical Index

Brake System, Hydraulic (Continued)
Brake System 06-06-1
06-06-11
Brake System, Anti-Lock, Rear 06-06-11
Brakes, Front 06-06-8
Brakes, Rear 06-06-7
Cleaning and Inspection 06-06-24
Description and Operation 06-06-1
Diagnosis and Testing 06-06-11
Disassembly and Assembly 06-06-19
Dual Hydraulic Brake System 06-06-8
Fluid Control Valve, Brake Master Cylinder 06-06-8
06-06-19
Hydraulic System Bleeding 06-06-20
Manual Bleeding 06-06-22
Pressure Bleeding 06-06-23
Removal and Installation 06-06-11
Service Procedures 06-06-20
Special Service Tools/Equipment 06-06-29
Specifications 06-06-28
Stoplight Switch 06-06-8
06-06-19

Brake System, Parking 06-05-1
Adjustments 06-05-17
Brake Shoe and Lining, Rear 06-05-15
Brake Warning System 06-05-7
Brake, Parking, Transmission-Mounted, F-Super Duty 06-05-15
Brakes, Rear 06-05-17
Cable and Conduit, Front 06-05-11
Cable and Conduit, Intermediate 06-05-11
Cable and Conduit, Rear 06-05-14
Cable Tension, Release 06-05-17
Cleaning and Inspection 06-05-16
Control Assemblies 06-05-1
Control, Parking Brake, F-250 Heavy Duty and F-350 06-05-9
Control, Parking Brake, F-Super Duty 06-05-9
Description and Operation 06-05-1
Diagnosis and Testing 06-05-7
Field Adjustment, Foot-Actuated Lever 06-05-17
Indicator Bulb, Brake System Warning 06-05-16
Inspection and Verification 06-05-7
Parking Brake 06-05-7
Parking Brake, Cable-Actuated Rear Wheel 06-05-1
Parking Brake, Cable-Actuated Rear Wheel, F-250 Heavy Duty and F-350 06-05-17

Brake System, Parking (Continued)
Parking Brake, Cable-Actuated, Transmission-Mounted 06-05-4
Parking Brake, Cable-Actuated, Transmission-Mounted, F-Super Duty 06-05-17
Parking Brakes 06-05-16
Pinpoint Tests 06-05-8
Removal and Installation 06-05-9
Signal Switch and Bracket, Parking Brake 06-05-16
Special Service Tools/Equipment 06-05-18
Specifications 06-05-18
Symptom Chart 06-05-7

Brake System, Service 06-00-1
Adjustments 06-00-28
Air Trapped In Brake System 06-00-25
Booster, Hydro-Boost 06-00-4
Booster, Power Brake 06-00-4
Brake Booster 06-00-27
Brake Drum 06-00-33
Brake Fluid Level Check 06-00-31
Brake Hose 06-00-26
Brake Load Sensor Proportioning Valve 06-00-3
Brake Load Sensor Proportioning Valve, F-Super Duty Vehicles (Except Motorhome Chassis) 06-00-28
Brake Master Cylinder 06-00-27
Brake Master Cylinder Fluid Control Valve 06-00-3
Brake Master Cylinder, Dual 06-00-2
Brake Pedal 06-00-28
Brake Pedal Reserve Check 06-00-25
Brake Pump and Reservoir 06-00-4
Brake Rotor, Disc 06-00-31
Brake System 06-00-5
Brake System Pressure Test 06-00-24
Brake System Service 06-00-31
Brake System Test Procedure 06-00-25
Brake System, Anti-Lock 06-00-5
Brake System, Hydraulic 06-00-3
Brake System, Parking 06-00-4
Brake Thickness 06-00-27
Brake Tubing 06-00-27
Brake, Power — Function Test 06-00-24
Brakes, Disc 06-00-26
Brakes, Drum 06-00-26
Brakes, Front — Disc 06-00-31
Brakes, Front Disc 06-00-4
Brakes, Rear — Disc 06-00-31
Brakes, Rear Disc 06-00-4

Alphabetical Index

Brake System, Service (Continued)
Brakes, Rear — Drum 06-00-31
Brakes, Rear Drum 06-00-4
Cleaning and Inspection 06-00-26
Component Tests 06-00-22
Description and Operation 06-00-2
Diagnosis and Testing 06-00-5
Electrical Schematic Reference(s) 06-00-5
Hydraulic Brake Fluid Color 06-00-31
Hydraulic Leak Test 06-00-24
Hydraulic Pressure/Flow Test Procedure 06-00-25
Hydraulic System 06-00-27
Inspection and Verification 06-00-5
Parking Brake 06-00-28
Pinpoint Tests 06-00-16
Preparation for Hydraulic Pressure/Flow Tests 06-00-24
Refinishing 06-00-32
06-00-33
Runout 06-00-32
Service Limits 06-00-33
06-00-34
Service Precautions 06-00-26
Service Procedures 06-00-24
Special Service Tools/Equipment 06-00-34
Specifications 06-00-34
Symptom Chart 06-00-8

Brake, Power, Hydro-Boost Booster 06-07C-1
Adjustments 06-07C-12
Brake Pedal Rod, Motorhome 06-07C-12
Brake, Power, Hydro-Boost Booster 06-07C-1
06-07C-6
Description and Operation 06-07C-1
Diagnosis and Testing 06-07C-6
Hydro-Boost Booster 06-07C-7
Hydro-Boost Unit, Bleeding 06-07C-12
Removal and Installation 06-07C-7
Reserve System 06-07C-4
Specifications 06-07C-13
Steering and Hydro-Boost Plumbing 06-07C-10

Brake, Power, Vacuum Pump, 7.3L Diesel Engine 06-07B-1
Adjustments 06-07B-4
Belt Adjustment 06-07B-4
Brake, Power, Vacuum Pump, 7.3L Diesel 06-07B-1
Description and Operation 06-07B-1
Diagnosis and Testing 06-07B-1

Brake, Power, Vacuum Pump, 7.3L Diesel Engine (Continued)
Removal and Installation 06-07B-1
Special Service Tools/Equipment 06-07B-4
Specifications 06-07B-4
Switch, Low Vacuum Indicator 06-07B-1
Vacuum Pump 06-07B-3

Brake, Power, Vacuum, Single and Tandem Diaphragm 06-07A-1
Adjustments 06-07A-6
Brake Booster Check Valve, Power 06-07A-6
Brake Booster, Power 06-07A-1
06-07A-4
06-07A-6
Brake System, Power 06-07A-4
Cleaning and Inspection 06-07A-6
Description and Operation 06-07A-1
Diagnosis and Testing 06-07A-4
Disassembly and Assembly 06-07A-6
Power Brake Booster-to-Brake Master Cylinder Push Rod 06-07A-6
Removal and Installation 06-07A-4
Specifications 06-07A-7
Vacuum/Brake Booster Hose and Power Brake Booster Check Valve 06-07A-6

Brakes, Front Disc 06-03-1
Adjustments 06-03-9
Brake Shoe and Lining, Dual Piston 06-03-6
Brake Shoe and Linings 06-03-4
Brake Shoes and Linings 06-03-9
Brake System, Disc 06-03-1
Brakes, Front Disc 06-03-4
Caliper 06-03-8
Caliper, Dual Piston 06-03-7
Caliper, Heavy-Duty Pin Slider, F-250 Heavy Duty and F-350 06-03-4
Cleaning and Inspection 06-03-8
Description and Operation 06-03-1
Diagnosis and Testing 06-03-4
Disassembly and Assembly 06-03-7
Front Disc Brake Caliper 06-03-5
Front Disc Brake Hub and Rotor 06-03-6
Hydraulic System Bleeding 06-03-9
Removal and Installation 06-03-4
Rotor 06-03-4
06-03-9
Rotor Refinishing 06-03-8

Official Licensed Ford Motor Company

Alphabetical Index

Brakes, Front Disc (Continued)
Rotor Shield 06-03-4
06-03-7
Service Precautions 06-03-4
Service Procedures 06-03-8
Special Service Tools/Equipment 06-03-10
Specifications 06-03-9
Wheel Hubs and Bearings 06-03-4

Brakes, Rear Disc 06-04-1
Anti-Rattle Clip 06-04-2
Brake Shoe and Lining 06-04-2
06-04-3
06-04-8
Brakes, Rear Disc 06-04-1
06-04-2
Caliper 06-04-1
06-04-2
06-04-7
06-04-8
Cleaning and Inspection 06-04-8
Description and Operation 06-04-1
Diagnosis and Testing 06-04-2
Disassembly and Assembly 06-04-7
Hubs and Bearings 06-04-2
Removal and Installation 06-04-2
Rotor 06-04-1
06-04-4
06-04-8
Rotor Refinishing 06-04-8
Service Precautions 06-04-2
Service Procedures 06-04-8
Shield 06-04-6
Special Service Tools/Equipment 06-04-9
Specifications 06-04-8
Support Bracket 06-04-2
06-04-6

Brakes, Rear Drum 06-02-1
Adjuster 06-02-9
Adjustments 06-02-10
Bleeding Brakes 06-02-11
Brake Backing Plate 06-02-7
06-02-9
Brake Drum 06-02-2
Brake Drums 06-02-9
Brake Lining 06-02-9
Brake Shoe and Lining 06-02-10
Brake Shoe Automatic Adjustment 06-02-1

Brakes, Rear Drum (Continued)
Brake Shoe, Initial Setting 06-02-11
Brake Shoe, Periodic 06-02-11
Brake Shoes and Linings 06-02-3
Brake System, Drum 06-02-1
Brakes, Rear Drum 06-02-2
Cleaning and Inspection 06-02-9
Description and Operation 06-02-1
Diagnosis and Testing 06-02-2
Disassembly and Assembly 06-02-7
Drum Refinishing 06-02-8
Drums Installed 06-02-11
Drums Removed 06-02-10
Hubs and Bearing 06-02-1
Rear Wheel Cylinders 06-02-9
Removal and Installation 06-02-2
Self Adjuster 06-02-7
Service Procedures 06-02-8
Special Service Tools/Equipment 06-02-12
Specifications 06-02-11
Springs 06-02-9
Wheel Cylinder 06-02-7
Wheel Hub Bolt 06-02-2

Bumpers 01-19-1
Air Deflector, Vehicles with 7.3L Diesel Engine 01-19-4
Bumper, Front 01-19-1
Bumper, Rear 01-19-3
Removal and Installation 01-19-1
Specifications 01-19-5

C

Climate Control System, Service 12-00-1
A/C Compressor 12-00-31
A/C Compressor and A/C Clutch Assemblies 12-00-6
A/C Compressor Pressure Relief Valve 12-00-6
A/C Condenser Core 12-00-7
A/C Cycling Switch 12-00-9
A/C Evaporator Core 12-00-8
A/C Evaporator Core Orifice 12-00-7
A/C Evaporator Core Orifice Replacement Kit Installation 12-00-39
A/C Evaporator Core/A/C Condenser Core 12-00-29

Official Licensed Product
Ford Motor Company

Alphabetical Index

Climate Control System, Service (Continued)

A/C Manifold and Tube Leak Test 12-00-31
A/C Manifold Gauge Set Connection 12-00-34
A/C Pressure Cut-Off Switch 12-00-6
A/C Pressure Cutoff Switch 12-00-8
A/C Refrigerant System Operation 12-00-4
Basic Principles 12-00-2
Charging with a Charging Cylinder 12-00-37
Checking for A/C Leaks 12-00-28
Climate Control System 12-00-10
Component Tests 12-00-21
Description and Operation 12-00-2
Diagnosis and Testing 12-00-10
Effect of Pressure on Boiling or Condensation 12-00-2
Electrical Schematic Reference(s) 12-00-10
External Leak Test 12-00-31
Heat Transfer 12-00-2
Inspection and Assembly Requirements 12-00-40
Inspection and Verification 12-00-10
Latent Heat of Vaporization 12-00-2
Leak Detector, Electronic 12-00-28
Leak Tracer Dye 12-00-29
Mini-Tube Vacuum Hose Service 12-00-40
On-Vehicle Leak Test 12-00-29
Pinpoint Tests 12-00-12
R-134a Refrigerant Oil 12-00-40
Recovery of Contaminated A/C Systems 12-00-33
Refrigerant Flow 12-00-4
Refrigerant Identification and Analysis 12-00-33
Refrigerant Oil Addition 12-00-39
Refrigerant Recovery 12-00-34
Refrigerant System 12-00-33
Refrigerant System Filtering After A/C Compressor Replacement 12-00-39
Refrigerant System Protection 12-00-6
Refrigerant System Tests 12-00-24
Refrigerant Systems 12-00-5
Rotating Torque Check 12-00-32
Safety Precautions 12-00-2
Service Access Gauge Port Valves 12-00-28
Service Gauge Port Valves 12-00-10
Service Precautions 12-00-3
Service Procedures 12-00-24
Special Service Equipment 12-00-9, 12-00-33
Special Service Tools/Equipment 12-00-41

Climate Control System, Service (Continued)

Specifications 12-00-41
Spring Lock Coupling 12-00-7, 12-00-37
Suction Accumulator/Drier 12-00-8
Suction Accumulator/Drier Replacement Guidelines 12-00-39
Symptom Chart 12-00-10
System Charging 12-00-37
System Charging Setup 12-00-36
System Discharging and Recovery 12-00-35
System Evacuating 12-00-35
System Flushing 12-00-35

Compressor and Clutch, FS-10 ..... 12-03B-1
A/C Clutch Air Gap 12-03B-7
A/C Clutch and A/C Clutch Pulley 12-03B-2
A/C Clutch Field Coil 12-03B-4
A/C Compressor 12-03B-1, 12-03B-2
A/C Manifold and Tube Assembly 12-03B-2
Adjustments 12-03B-7
Compressor and Clutch 12-03B-1
Description and Operation 12-03B-1
Diagnosis and Testing 12-03B-1
Refrigerant System Filtering After A/C Compressor Replacement 12-03B-2
Removal and Installation 12-03B-2
Shaft Seal 12-03B-5
Special Service Tools/Equipment 12-03B-9
Specifications 12-03B-9

Compressor and Clutch, SD-7H15 ..... 12-03C-1
A/C Clutch Air Gap 12-03C-6
A/C Clutch and A/C Clutch Pulley 12-03C-2
A/C Clutch Field Coil 12-03C-5
A/C Compressor 12-03C-1, 12-03C-2
Adjustments 12-03C-6
Compressor and Clutch 12-03C-2
Description and Operation 12-03C-1
Diagnosis and Testing 12-03C-2
Removal and Installation 12-03C-2
Special Service Tools/Equipment 12-03C-7
Specifications 12-03C-7
Thermal Protection Switch 12-03C-5

Official Licensed Product

Alphabetical Index

D

Door Lock Control System, Electronic 01-14B-1
Antenna 01-14B-12
Battery Saver 01-14B-2
Description and Operation 01-14B-1
Diagnosis and Testing 01-14B-3
Door Lock Control System, Electronic 01-14B-1
Electrical Schematic Reference(s) 01-14B-3
Electronic Door Lock System 01-14B-3
Inputs and Outputs 01-14B-2
Inspection and Verification 01-14B-3
Pinpoint Tests 01-14B-4
Programming, Electronic Door Lock Control System 01-14B-2
Remote Entry Receiver Module 01-14B-11
Removal and Installation 01-14B-11
Special Service Tools/Equipment 01-14B-12
Specifications 01-14B-12
Symptom Chart 01-14B-3
Transmitter Battery 01-14B-12
Transmitter, Keyless Entry Remote 01-14B-2

Doors, Tailgate 01-03-1
Door Latch Striker 01-03-2
Doors, Front and Rear 01-03-1
Removal and Installation 01-03-1
Specifications 01-03-4
Tailgate 01-03-2

F

Frame 02-01-1
Diagonal or X-Frame Checking Method 02-01-4
Drilling Precautions 02-01-4
Frame and Crossmembers 02-01-1
Frame Extension 02-01-5
Frame Inspection 02-01-4
Frame Member Replacement 02-01-5
Frame Reinforcing 02-01-4
Frame Service 02-01-4
Frame Side Rail to Rear Shock Bracket 02-01-5
Frame Straightening 02-01-4
Frame Strength Identification 02-01-4
Removal and Installation 02-01-1

Frame (Continued)
Rivet Removal and Replacement 02-01-6
Service Procedures 02-01-4
Special Service Tools/Equipment 02-01-8
Specifications 02-01-8
Steering Gear Frame Liner Service, F-350 02-01-6
Weld Attachment 02-01-5
Welding Precautions 02-01-4

G

Gauges/Warning Devices, Chime/Buzzer System 13-09-1
Buzzer Module 13-09-7
Description and Operation 13-09-1
Diagnosis and Testing 13-09-2
Electrical Schematic Reference(s) 13-09-2
Gauges/Warning Devices, Chime/Buzzer System 13-09-2
Headlamp Switch On Warning (Available on Some Models) 13-09-2
Inspection and Verification 13-09-2
Key-in-Ignition Warning 13-09-1
Pinpoint Tests 13-09-3
Removal and Installation 13-09-6
Safety Belt Warning 13-09-1
Special Service Tools/Equipment 13-09-7
Symptom Chart 13-09-2
Warning Chime Module 13-09-6
Warning Chime/Buzzer System 13-09-1

Generator and Regulator, External Fan Type, 215 Ampere 14-02B-1
Adjustments 14-02B-5
Charging System 14-02B-1
Cleaning and Inspection 14-02B-5
Description and Operation 14-02B-1
Diagnosis and Testing 14-02B-1
Disassembly and Assembly 14-02B-3
Generator 14-02B-2
14-02B-3
14-02B-5
Generator and Regulator 14-02B-1
Generator Drive Belt 14-02B-5
Removal and Installation 14-02B-2
Specifications 14-02B-5

Alphabetical Index

Generator and Regulator, External Fan Type, 215 Ampere (Continued)
Voltage Regulator 14-02B-1
14-02B-2

Generator, Integral Rear Mounted Regulator, Internal Fan Type, 95 Ampere and 130 Ampere 14-02A-1
A Circuit 14-02A-2
Adjustments 14-02A-5
Battery Positive Voltage (B+) Output 14-02A-2
Brush and Terminal Holder Replacement 14-02A-5
Charging System 14-02A-1
Description and Operation 14-02A-1
Diagnosis and Testing 14-02A-2
Disassembly and Assembly 14-02A-5
Generator 14-02A-1
14-02A-5
Generator and Regulator 14-02A-2
Generator Circuit 14-02A-2
Generator Drive Belt 14-02A-5
Generator, 5.8L and 7.3L Engines 14-02A-3
Generator, 7.5L Engine 14-02A-2
I Circuit 14-02A-2
Removal and Installation 14-02A-2
S Circuit 14-02A-2
Specifications 14-02A-5
Voltage Regulator 14-02A-4
14-02A-5

Glass, Frames and Mechanisms 01-11-1
Adjustments 01-11-26
Back Window Glass, Fixed 01-11-17
Back Window Glass, Opening 01-11-18
Component Tests 01-11-6
Diagnosis and Testing 01-11-1
Division Bar 01-11-23
Door Glass Run Retainer, Front 01-11-22
Door Glass Run Retainer, Rear 01-11-23
Door Glass Top Run, Front 01-11-23
Door Glass Top Run, Rear 01-11-24
Door Window Glass, Front 01-11-6
Door Window Glass, Rear 01-11-9
Electrical Schematic Reference(s) 01-11-1
Glass Friction Areas 01-11-26
Inspection and Verification 01-11-1
Latch, Opening Back Window Glass 01-11-26
Lubrication 01-11-26
Pinpoint Tests 01-11-2

Glass, Frames and Mechanisms (Continued)
Power Windows 01-11-1
Removal and Installation 01-11-6
Special Service Tools/Equipment 01-11-27
Specifications 01-11-26
Symptom Chart 01-11-1
Weatherstrip, Door Glass Belt 01-11-19
Weatherstrip, Opening Back Window Glass 01-11-20
Window Glass, Rear Quarter 01-11-25
Window Glass, Vent 01-11-24
Window Mechanism, Front Door 01-11-26
Window Mechanism, Rear Door 01-11-26
Window Regulator Control Switch 01-11-20
Window Regulator Electric Drive, Front Door 01-11-21
Window Regulator, Manual and Power Front and Rear Doors 01-11-12
Window Regulators 01-11-26
Window, Vent Weatherstrip 01-11-24
Windshield Glass 01-11-14
Windshield Outside Moulding 01-11-17

H

Handles, Locks, Latches and Mechanisms 01-14A-1
Actuator, Power Door Lock 01-14A-11
Adjustments 01-14A-14
Component Tests 01-14A-5
Control Switch, Door Lock 01-14A-12
Diagnosis and Testing 01-14A-1
Door Handle/Latch Assembly 01-14A-6
Electrical Schematic Reference(s) 01-14A-1
Handle, Inside Door, Front and Rear 01-14A-12
Handle, Outside Door, Front 01-14A-12
Handles, Locks, Latches and Mechanisms 01-14A-1
Inspection and Verification 01-14A-1
Latch, Door, Front 01-14A-6
Latch, Door, Rear, Crew Cab 01-14A-8
Lock Cylinder, Door 01-14A-10
Pinpoint Tests 01-14A-2
Release Control Assembly, Tailgate 01-14A-12
Remote Control Assembly, Door Latch, Rear, Crew Cab 01-14A-10
Remote Control Link, Door Latch, Front 01-14A-10

Official Licensed Product

Alphabetical Index

Handles, Locks, Latches and Mechanisms (Continued)
Removal and Installation 01-14A-6
Special Service Tools/Equipment 01-14A-14
Specifications 01-14A-14
Striker, Door Latch 01-14A-14
Symptom Chart 01-14A-1

Heating and Defrosting 12-02-1
Adjustments 12-02-24
Air Damper Door 12-02-16
12-02-18
Air Inlet Duct Door 12-02-16
Air Plenum Chamber and Duct 12-02-13
Airflow Control 12-02-2
Blower Motor 12-02-2
Blower Motor and Blower Motor Wheel Assembly 12-02-16
Blower Motor Control 12-02-2
Blower Motor Switch 12-02-9
Blower Motor Switch Resistor Assembly 12-02-16
Blower Motor Thermal Limiter 12-02-2
12-02-16
Climate Control Assembly 12-02-1
12-02-7
Climate Control Assembly Illumination Bulbs 12-02-8
Climate Control Assembly Switch 12-02-9
Climate Control Assembly Switch Knob(s) 12-02-9
Climate Control Cables 12-02-10
Defroster Ducts 12-02-15
Description and Operation 12-02-1
Diagnosis and Testing 12-02-7
Floor Duct Door 12-02-18
Heater Blower Motor Switch Resistor 12-02-2
Heater Case 12-02-12
Heater Core 12-02-3
12-02-12
Heater Water Hoses 12-02-18
Heating and Defrosting 12-02-7
Instrument Panel 12-02-7
Instrument Panel Registers 12-02-2
12-02-12
Mini-Tube Vacuum Hose Service 12-02-24
Mini-Tube Vacuum Hoses 12-02-5
Outlet Floor Duct 12-02-15
Recirculation/Fresh Air Control 12-02-2
Register Louver Assembly 12-02-12
Removal and Installation 12-02-7

Heating and Defrosting (Continued)
Safety Precautions 12-02-5
Side Window Demister and Hose 12-02-18
Special Service Tools/Equipment 12-02-25
Specifications 12-02-24
System Airflow 12-02-3
Temperature Control 12-02-2
Temperature Control Cable 12-02-10
12-02-24
Vacuum Control Motors 12-02-16

Horn 13-06-1
Description and Operation 13-06-1
Diagnosis and Testing 13-06-1
Electrical Schematic Reference(s) 13-06-1
Horn 13-06-1
Horn Assembly 13-06-3
Horn Mounting Location 13-06-1
Horn Relay 13-06-4
Horn Switch 13-06-4
Horn Switch, Steering Wheel Mounted 13-06-1
Horn System 13-06-1
Inspection and Verification 13-06-1
Pinpoint Tests 13-06-2
Removal and Installation 13-06-3
Special Service Tools/Equipment 13-06-5
Specifications 13-06-4
Symptom Chart 13-06-2

I

Identification Codes 00-01-1
Assembly Plant Codes 00-01-7
Axle Ratio Codes 00-01-13
Brake System and GVWR Class 00-01-5
Brake Type Codes 00-01-10
Certification Label 00-01-2
Check Digit for All Vehicles 00-01-7
Description and Operation 00-01-1
Engine Type, Displacement, Cylinders, Fuel and Manufacturer 00-01-6
Exterior Paint Color Codes 00-01-8
Interior Trim Type Codes 00-01-9
Model or Line, Series, Chassis, Cab or Body Type 00-01-6
Production Sequence Number 00-01-7
Radio Codes 00-01-12

Licensed Product

Alphabetical Index

Identification Codes (Continued)
Region, Special Order and Wheelbase Codes 00-01-16
Suspension Spring Codes 00-01-15
Tape Stripe Codes 00-01-11
Transmission Codes 00-01-14
Vehicle Certification Label (VC Label) Codes 00-01-7
Vehicle Identification Number 00-01-5
Vehicle Identification Number (VIN) 00-01-1
Vehicle Model Year 00-01-7
Vehicle Type Codes 00-01-7
World Manufacturer Identifier 00-01-5

Instrument Cluster and Panel Lighting 13-00-1
Audio System Lamps 13-00-4
Bulbs, Miniature 13-00-4
Climate Control Lamps 13-00-4
Description and Operation 13-00-1
Diagnosis and Testing 13-00-2
Electrical Schematic 13-00-2
Inspection and Verification 13-00-2
Instrument Cluster and Panel Lighting 13-00-1
Instrument Cluster Lamps 13-00-4
Pinpoint Tests 13-00-2
Removal and Installation 13-00-4
Special Service Tools/Equipment 13-00-4
Symptom Chart 13-00-2

Instrument Cluster, Conventional 13-01-1
4x4 High Range 13-01-9
4x4 Low Range 13-01-9
Automatic Transmission Selector Indicator 13-01-32
Battery Voltage Gauge 13-01-7
13-01-32
Brake System 13-01-9
Charge Indication System 13-01-7
Charging System 13-01-9
Charging System Warning 13-01-7
Check Engine (MIL) 13-01-9
Cleaning and Inspection 13-01-34
Component Tests 13-01-28
Coolant Temperature Indication System 13-01-6
Description and Operation 13-01-1
Diagnosis and Testing 13-01-10
Disassembly and Assembly 13-01-34
Electrical Schematic Reference(s) 13-01-10
Fuel Filter, 7.3L Diesel 13-01-10

Instrument Cluster, Conventional (Continued)
Fuel Gauge 13-01-4
13-01-31
Fuel Level Indication System 13-01-4
Fuel Reset 13-01-10
Fuel Sending Unit 13-01-4
Fuel Tank Selector Switch 13-01-6
High Beam 13-01-9
High Coolant Temperature Warning 13-01-6
Indicator/Warning Bulbs 13-01-33
Inspection and Verification 13-01-10
Instrument Cluster 13-01-1
13-01-10
13-01-29
13-01-34
Instrument Cluster Display Proveout 13-01-3
Instrument Cluster Lenses 13-01-34
Instrument Cluster Temperature Gauge 13-01-6
13-01-31
LH/RH Turn 13-01-9
Odometer Replacement 13-01-8
Oil Pressure Gauge 13-01-7
13-01-31
Oil Pressure Indication System 13-01-7
Oil Pressure Switch 13-01-7
Overdrive/Overdrive Off 13-01-9
Pinpoint Tests 13-01-12
Printed Circuit 13-01-3
Programmable Speedometer/Odometer Module (PSOM) 13-01-8
Removal and Installation 13-01-29
Safety Belt 13-01-9
Special Service Tools/Equipment 13-01-36
Specifications 13-01-35
Speedometer 13-01-7
Symptom Chart 13-01-10
Tachometer 13-01-32
Tachometer (if So Equipped) 13-01-9
Transmission Control Selector Indicator 13-01-9
Trip Odometer 13-01-8
Wait to Start, 7.3L Diesel 13-01-10
Warning Indicators 13-01-9
Water in Fuel, 7.3L Diesel 13-01-10
Water Temperature Indicator Sender Unit 13-01-7

Instrument Panel and Console 01-12-1
Diagnosis and Testing 01-12-1
Electrical Schematic Reference(s) 01-12-1

Official Licensed Product
Ford Motor Company

Alphabetical Index

Instrument Panel and Console (Continued)
Finish Panel, Instrument Panel 01-12-8
Instrument Cluster 01-12-8
Instrument Panel 01-12-2
Instrument Panel Pad 01-12-2
Parts Replacement 01-12-1
Power Point 01-12-1
Removal and Installation 01-12-1
Special Service Tools/Equipment 01-12-9
Specifications 01-12-9
Steering Column 01-12-1

L

Lamps, Daytime Running 17-04-1
Daytime Running Lamp (DRL) System 17-04-1
Daytime Running Lamps 17-04-1
Daytime Running Lamps (DRL) Control Module 17-04-4
Description and Operation 17-04-1
Diagnosis and Testing 17-04-1
Electrical Schematic Reference(s) 17-04-1
Inspection and Verification 17-04-1
Parking Brake Signal Switch 17-04-4
Pinpoint Tests 17-04-2
Removal and Installation 17-04-4
Special Service Tools/Equipment 17-04-4
Specifications 17-04-4
Symptom Chart 17-04-2

Lifting and Jacking 00-02-1
Hoist, Drive-On 00-02-1
Hoist, Frame Contact 00-02-1
Hoist, Single-Post 00-02-1
Hoist, Twin-Post 00-02-1
Hoisting and Jacking 00-02-1
Jack, Floor 00-02-2
Lifting Instructions 00-02-1

Lighting, Exterior 17-01-1
Adjustments 17-01-39
Aerodynamic 17-01-2
Backup Lamps 17-01-20
Bulb, High Beam Indicator 17-01-37
Bulb, Styleside Only 17-01-35

Lighting, Exterior (Continued)
Component Tests 17-01-9, 17-01-16, 17-01-22
Daytime Running Lamps 17-01-2
Description and Operation 17-01-2
Diagnosis and Testing 17-01-5
Electrical Schematic Reference(s) 17-01-5
Exterior Lamp Bulb Socket 17-01-31
Hazard Flasher Switch 17-01-4
Headlamp 17-01-39
Headlamp Assembly 17-01-29
Headlamp Bulb 17-01-27
Headlamp Switch 17-01-2, 17-01-9, 17-01-25
Headlamps 17-01-2, 17-01-5
Headlamps On Warning Buzzer/Chime 17-01-2
Indicator Flasher 17-01-4
Inspection and Verification 17-01-5, 17-01-9, 17-01-12, 17-01-17, 17-01-20, 17-01-23
Lamp and Switch, Fog 17-01-2
Lamp Assembly 17-01-30, 17-01-31, 17-01-33, 17-01-34, 17-01-36
Lamp Assembly, Cargo (Exterior) 17-01-37
Lamp Assembly, Cargo, F-250 Heavy Duty, F-350, F-Super Duty Regular Cab and Crew Cab 17-01-37
Lamp Housing 17-01-33
Lamp Switch, Backup, 5-Speed Manual Overdrive Transmission 17-01-27
Lamp, Cargo 17-01-4
Lamp, License Plate, F-250 Heavy Duty, F-350 with Rear Bumper 17-01-34
Lamp, License Plate, F-250 Heavy Duty, F-350 Without Rear Bumper 17-01-35
Lamp, License Plate, Lamp Socket 17-01-34
Lamp, Rear Hi-Mount 17-01-36
Lamps Parking/Turn Signal/Side Marker 17-01-33
Lamps, Backup 17-01-4
Lamps, License 17-01-4

Official Licensed Product

Alphabetical Index

Lighting, Exterior (Continued)
Lamps, Parking, Front Lamp 17-01-30
Lamps, Parking, Rear Lamp, F-250 Heavy Duty, F-350 4x2 and F-Super Duty Chassis Cab 17-01-31
Lamps, Parking, Rear Lamp, F-250 Heavy Duty, F-350 Styleside Pickup 17-01-31
Lamps, Parking, Tail and Marker 17-01-3
Lamps, Roof Marker 17-01-4
17-01-35
Lamps, Side Marker, Rear Lamp, F-350 Styleside With Dual Rear Wheels 17-01-33
Light Switch Rheostat Resistor 17-01-2
Multi-Function Switch 17-01-27
Parking Lamps 17-01-17
Pinpoint Tests 17-01-6
17-01-10
17-01-12
17-01-18
17-01-21
17-01-23
Removal and Installation 17-01-25
Socket 17-01-37
Special Service Tools/Equipment 17-01-40
Specifications 17-01-40
Stoplamp, Hi-Mount 17-01-3
Stoplamps 17-01-3
17-01-9
Stoplight Switch 17-01-3
17-01-26
Symptom Chart 17-01-5
17-01-9
17-01-12
17-01-17
17-01-20
Trailer Towing Package Wiring 17-01-4
17-01-23
17-01-37
Turn Signal and Hazard Lamps 17-01-4
Turn Signal Lamps/Hazard Flasher Lamps 17-01-12

Lighting, Interior 17-02-1
Ash Receptacle 17-02-2
Component Test 17-02-6
Courtesy Lamps 17-02-2
Description and Operation 17-02-1
Diagnosis and Testing 17-02-2
Door 17-02-2
Electrical Schematic Reference(s) 17-02-2

Lighting, Interior (Continued)
Engine Compartment 17-02-2
Glove Compartment 17-02-2
Inspection and Verification 17-02-2
Instrument Cluster and Panel Lighting 17-02-1
Lamp, Ash Receptacle 17-02-9
Lamp, Dome 17-02-1
Lamp, Dome, Housing 17-02-7
Lamp, Dome, Lens 17-02-6
Lamp, Dome/Map Combination 17-02-1
Lamp, Dome/Map Combination, Housing 17-02-7
Lamp, Dome/Map Combination, Lens 17-02-7
Lamp, Engine Compartment 17-02-9
Lamp, Glove Compartment 17-02-8
Lamp, Vanity Mirror 17-02-9
Lamps, Courtesy 17-02-2
Lamps, Courtesy, Door 17-02-8
Pinpoint Tests 17-02-3
Removal 17-02-8
Removal and Installation 17-02-6
Special Service Tools/Equipment 17-02-9
Specifications 17-02-9
Switch, Courtesy Lamp 17-02-8
Symptom Chart 17-02-2
Vanity Mirrors 17-02-2

M

Mirrors, Rearview 01-09-1
Diagnosis and Testing 01-09-1
Electrical Schematic Reference(s) 01-09-1
Inspection and Verification 01-09-1
Mirror Control 01-09-5
Mirror Motor 01-09-5
Mirror Mounting Bracket 01-09-7
Mirror, Inside Rearview, Manual 01-09-6
Mirror, Manual, Outside Rearview, Western Type, Swing-Away 01-09-3
Mirror, Power, Outside Rearview 01-09-5
Mirror, Recreation Swing-Out, Dual Position 01-09-4
Mirrors, Power, Outside Rearview 01-09-1
Pinpoint Tests 01-09-2
Removal and Installation 01-09-3
Special Service Tools/Equipment 01-09-8
Specifications 01-09-8
Symptom Chart 01-09-1

Official Licensed Ford Motor Company

Alphabetical Index

N

Noise, Vibration and Harshness 00-04-1
Adjustments 00-04-30
Balancing, Brake Drum 00-04-30
Balancing, Driveshaft 00-04-31
Components Tests 00-04-25
Description and Operation 00-04-1
Diagnosis and Testing 00-04-2
Diagnosis Charts 00-04-2
Diagnostic Theory 00-04-2
Engine/Transmission Mounts, Neutralizing 00-04-32
Exhaust System, Neutralizing 00-04-32
Glossary of Terms 00-04-28
Inspection and Verification 00-04-2
Match Mounting Tires 00-04-31
Noise, Vibration and Harshness 00-04-2
Noise, Vibration and Harshness (NVH) 00-04-1
Pinpoint Tests 00-04-12
Service Procedures 00-04-32
Special Service Tools /Equipment 00-04-32
Symptom Charts 00-04-9
Terms 00-04-28
Wheels, Distorted 00-04-31

P

Pickup Box 01-04-1
Adjustments 01-04-4
Fender, Rear, F-350 with Dual Rear Wheels 01-04-2
Pickup Box Adjustments 01-04-4
Pickup Box Alignment 01-04-4
Pickup Box Lean 01-04-5
Pickup Box, Styleside 01-04-1
Removal and Installation 01-04-1
Shimming, Axle 01-04-6
Shimming, Pickup Box 01-04-6
Specifications 01-04-9

R

Radio, Tape Chassis and Digital Audio Compact Disc Player 15-01-1
Cassette Tape Player 15-01-1
Compact Disc Player, Digital Audio 15-01-1
Description and Operation 15-01-1
Diagnosis and Testing 15-01-1
Digital Audio Compact Disc Player 15-01-1
Radio 15-01-1
Radio Amplifier 15-01-5
Radio Chassis 15-01-2
Radio Frequency Interference Suppression Equipment 15-01-2
Removal and Installation 15-01-2
Sound Systems 15-01-1
Special Service Tools/Equipment 15-01-6
Specifications 15-01-5

Restraints, Active 01-20-1
Cleaning and Inspection 01-20-10
Description and Operation 01-20-1
Diagnosis and Testing 01-20-2
General Cleaning Method B 01-20-10
General Cleaning Method C 01-20-11
Inspection and Verification 01-20-2
Occupant Restraint System 01-20-1
Removal and Installation 01-20-3
Restraints, Active 01-20-2
Retractor and Tongue with Shoulder Belt Height Adjuster 01-20-3
Retractor and Tongue Without Shoulder Belt Height Adjuster 01-20-3
Safety Belt Lockup Functional Test Procedure 01-20-10
Safety Belt Procedure After a Collision 01-20-8
Safety Belt Retractor Unjamming Procedure 01-20-9
Safety Belt Tongue Rotated on Belt 01-20-9
Safety Belt Twisted at the Safety Belt Guide 01-20-9
Safety Belt Webbing 01-20-10
Safety Belt with Anchor Plate Thread Damage 01-20-7
Safety Belt with No Anchor Plate Thread Damage 01-20-7
Safety Belts, Front Seats 01-20-3

Alphabetical Index

Restraints, Active (Continued)
Safety Belts, Rear Seats, SuperCab and Crew Cab 01-20-7
Service Procedures 01-20-7
Shoulder Strap Adjuster with Stripped Weld Nuts, Front Seat 01-20-8
Special Service Tools/Equipment 01-20-12
Specifications 01-20-11
Spot Cleaning Method A 01-20-10
Symptom Chart 01-20-3

S

Seats and Tracks 01-10-1
Captain Chairs, Front 01-10-6
Diagnosis and Testing 01-10-1
Electrical Schematic Reference(s) 01-10-1
Inspection and Verification 01-10-1
Latch Striker, Front Seat Back 01-10-15
Latch, Bench Seat 01-10-12
Latch, Front 01-10-13
Latch, Rear Seat 01-10-14
Latch, Split Back Bench Seat 01-10-13
Pinpoint Tests 01-10-3
Power Seat 01-10-1
Pump, Front Seat Back Pad Adjusting 01-10-15
Removal and Installation 01-10-3
Seat Assembly, 40/20/40 Bench 01-10-4
Seat Track, Manual Bench 01-10-9
Seat Track, Rear, Crew Cab 01-10-10
Seat, Driver or Passenger, Bench 01-10-3
Seat, Rear, Bench, Crew Cab 01-10-6
Seat, Rear, Forward Facing, SuperCab 01-10-7
Seat, Rear, Side-Mounted Folding, SuperCab 01-10-6
Special Service Tools/Equipment 01-10-16
Specifications 01-10-16
Switch, Seat Control, Seat Back 01-10-11
Switch, Seat Control, Seat Regulator 01-10-12
Symptom Chart 01-10-2

Speakers 15-03-1
Description and Operation 15-03-1
Diagnosis and Testing 15-03-1
Radio Speakers 15-03-1
Radio Speakers, Front Door 15-03-1
Radio Speakers, Rear 15-03-2

Speakers (Continued)
Removal and Installation 15-03-1
Specifications 15-03-3

Steering Column 11-04-1
Adjustments 11-04-21
Description and Operation 11-04-1
Diagnosis and Testing 11-04-4
Disassembly and Assembly 11-04-13
Ignition Switch 11-04-13
Ignition Switch Lock Cylinder, Lock Cylinder Functional 11-04-12
Ignition Switch Lock Cylinder, Lock Cylinder Non-Functional 11-04-12
Removal and Installation 11-04-4
Special Service Tools/Equipment 11-04-22
Specifications 11-04-22
Steering Column 11-04-1, 11-04-4, 11-04-13
Steering Column Alignment 11-04-21
Steering Column Tube Bearing, Lower 11-04-11
Steering Column Tube Bearing, Upper 11-04-10
Steering Column, F-250 Heavy Duty, F-350, and F-Super Duty Chassis Cab 11-04-4
Steering Column, F-Super Duty Motorhome 11-04-6
Steering Shaft, Intermediate, F-250 Heavy Duty and F-350 11-04-9
Steering Shaft, Intermediate, F-Super Duty Chassis Cab and Motorhome 11-04-10
Steering Wheel 11-04-4
Tilt Wheel Handle and Shank 11-04-12
Transmission Range Indicator 11-04-21

Steering Column Switches 11-05-1
Adjustments 11-05-13
Brake-Shift Interlock Switch 11-05-3, 11-05-12
Description and Operation 11-05-1
Diagnosis and Testing 11-05-6
Electrical Schematic Reference(s) 11-05-6
Flasher, Indicator 11-05-3
Hazard Flasher Switch 11-05-3
High Beam/Flash-to-Pass Switch 11-05-2
Ignition Switch 11-05-12, 11-05-13
Ignition Switch Continuity Test 11-05-10
Ignition Switch Mechanical Test 11-05-10
Ignition Switch, Blade-Type 11-05-2

Official Licensed Reseller Ford Motor Company

Alphabetical Index

Steering Column Switches (Continued)
Inspection and Verification 11-05-6
Lockout Switch 11-05-13
Multi-Function Switch 11-05-1
11-05-10
Pinpoint Tests 11-05-7
Removal and Installation 11-05-10
Special Service Tools/Equipment 11-05-13
Specifications 11-05-13
Steering Column Switches 11-05-6
Symptom Chart 11-05-6
Transmission Control Switch 11-05-5
Turn Signal Switch 11-05-1
Windshield Washer Switch 11-05-2
Wiper Control Switch 11-05-2

Steering Gear, Integral Power, Ross TAS40 ..... 11-02D-1
Adjusting Screw and Retainer 11-02D-25
Adjustments 11-02D-39
Cleaning and Inspection 11-02D-37
Description and Operation 11-02D-1
Diagnosis and Testing 11-02D-4
Disassembly and Assembly 11-02D-11
Drive Belt Tension 11-02D-39
Final Adjustment 11-02D-36
Hoses, Pressure and Return 11-02D-1
Housing Ports, Plugs, Screws and Fittings 11-02D-35
Housing Roller Bearing or Retaining Ring Replacement 11-02D-34
Hydraulic Operation 11-02D-2
In-Vehicle Adjustment 11-02D-41
Input Shaft Seal 11-02D-4
Mechanical Operation 11-02D-1
Poppet Component Replacement 11-02D-26
Poppet Valve Manual Readjustment 11-02D-40
Pressure Relief Valve Operation 11-02D-4
Pump Flushing 11-02D-38
Removal and Installation 11-02D-4
Rotary Valve 11-02D-3
Rotor Shaft Seal 11-02D-8
Sector Shaft Adjustment 11-02D-39
Special Service Tools/Equipment 11-02D-42
Specifications 11-02D-42
Steering Gear 11-02D-8
11-02D-11
11-02D-37
Steering Gear Housing 11-02D-39
Steering Gear Input Shaft and Control 11-02D-39

Steering Gear, Integral Power, Ross TAS40 (Continued)
Steering Gear Sector Shaft 11-02D-39
Steering System, Power 11-02D-1
11-02D-4
System Flushing 11-02D-38
Valve Housing Adjustment 11-02D-41
Valve Housing/Steering Gear Input Worm Gear and Rack 11-02D-28

Steering Gear, Power, Ford 11-02B-1
Adjustments 11-02B-9
Cleaning and Inspection 11-02B-9
Description and Operation 11-02B-1
Diagnosis and Testing 11-02B-2
Disassembly and Assembly 11-02B-3
Identification 11-02B-2
In-Vehicle Adjustment 11-02B-9
Input Shaft and Valve Assembly 11-02B-7
Meshload 11-02B-9
Piston 11-02B-5
Removal and Installation 11-02B-2
Rotary Valve Centering Check 11-02B-10
Special Service Tools/Equipment 11-02B-11
Specifications 11-02B-10
Steering Gear 11-02B-1
11-02B-2
11-02B-3
11-02B-9
Steering Gear Housing 11-02B-6
Steering System, Power 11-02B-2
System Flushing 11-02B-9
Valve Housing 11-02B-7

Steering Linkage 11-03-1
Adjusting Sleeve 11-03-7
Description and Operation 11-03-1
Diagnosis and Testing 11-03-6
Drag Link 11-03-9
Drag Link, Steering Sector Shaft Arm, All Except F-Super Duty Motorhome Chassis 11-03-9
Drag Link, Steering Sector Shaft Arm, F-Super Duty Motorhome Chassis 11-03-9
Removal and Installation 11-03-7
Special Service Tools/Equipment 11-03-11
Specifications 11-03-11
Spindle/Steering Arm 11-03-11
Steering Gear Sector Shaft Arm 11-03-10

Official Licensed Product Ford Motor Company

Alphabetical Index

Steering Linkage (Continued)
Steering Linkage....11-03-1
11-03-6
Steering Linkage, Damper Assembly, F-350 4x4 and F-Super Duty Chassis Cab....11-03-7

Steering Pump, Power, C-II....11-02A-1
Adjustments....11-02A-6
Belt Drive....11-02A-5
Cleaning and Inspection....11-02A-6
Description and Operation....11-02A-1
Diagnosis and Testing....11-02A-2
Drive Belt Tension....11-02A-6
Pulley, Power Steering Pump....11-02A-2
Quick Connect Power Steering Fitting....11-02A-6
Removal and Installation....11-02A-2
Special Service Tools/Equipment....11-02A-6
Specifications....11-02A-6
Steering Pump....11-02A-1
11-02A-6
Steering Pump, Power....11-02A-2
Steering System, Power....11-02A-2

Steering Pump, Power, ZF....11-02C-1
Adjustments....11-02C-7
Cleaning and Inspection....11-02C-7
Description and Operation....11-02C-1
Diagnosis and Testing....11-02C-1
Disassembly and Assembly....11-02C-3
Drive Belt Tension....11-02C-7
Hoses, Pressure and Return....11-02C-2
Pump....11-02C-3
Pump Flushing....11-02C-7
Removal and Installation....11-02C-1
Reservoir, Pump Remote Oil....11-02C-2
Special Service Tools/Equipment....11-02C-7
Specifications....11-02C-7
Steering Pump....11-02C-1
Steering Pump, Power....11-02C-1
Steering System, Power....11-02C-1

Steering System, Service....11-00-1
Air Bleeding....11-00-11
Air Purge With External Vacuum Source Procedure....11-00-15
Cleaning and Inspection....11-00-17
Clear Vision....11-00-15
Description and Operation....11-00-2

Steering System, Service (Continued)
Diagnosis and Testing....11-00-2
External Leakage....11-00-12
Fill Procedure....11-00-16
Fluid Leak....11-00-13
Fluid Level....11-00-11
Fluid Level Top-Off Procedure....11-00-15
Identification....11-00-2
Inspection and Verification....11-00-2
Pinpoint Tests....11-00-5
Preliminary Procedures....11-00-11
Priming, Power Steering Pump....11-00-17
Pump Belt....11-00-11
Pump Flow and Pressure Tests....11-00-12
Purging Power Steering System of Air....11-00-15
Service Procedures....11-00-11
Special Service Tools/Equipment....11-00-20
Specifications....11-00-19
Start-Up Procedure After Power Steering Pump or Gear Service....11-00-16
Steering Column Bearing....11-00-15
Steering Gear....11-00-18
Steering Gear Model....11-00-2
Steering Linkage....11-00-15
Steering Pump, Power....11-00-17
Steering System....11-00-2
Symptom Chart....11-00-2
Turning Effort Check, Power Steering....11-00-12

Suspension, Front, 4-Wheel Drive....04-01B-1
Axle....04-01B-6
Axle Bearing Bracket, F-250 Heavy Duty....04-01B-9
Axle Pivot Bushing....04-01B-8
Axle, Front....04-01B-8
Ball Joint....04-01B-8
Bumper, Front....04-01B-12
Component Replacement....04-01B-5
Components....04-01B-5
Description and Operation....04-01B-1
Diagnosis and Testing....04-01B-6
Fasteners, Suspension....04-01B-6
Hubs, Automatic Locking....04-01B-6
Hubs, Manual Locking....04-01B-6
Removal and Installation....04-01B-6
Shock Absorber....04-01B-7
Shock Absorber, Front....04-01B-6
Specifications....04-01B-12
Spring, Leaf....04-01B-6

Official Licensed Service Manual

Alphabetical Index

Suspension, Front, 4-Wheel Drive (Continued)
Stabilizer Bar Link Assembly, F-250 Heavy Duty 04-01B-9
Stabilizer Bar Link Assembly, F-350 ..... 04-01B-11
Suspension, F-250 Heavy Duty with Dana Model 50 Front Drive Axle 04-01B-1
Suspension, F-350 with Dana Model 60 Monobeam Front Drive Axle 04-01B-3
Suspension, Front 04-01B-6
Wheel Bearing and Wheel Hub 04-01B-6
Wheel Hub Bolt 04-01B-7
Wheel Spindle 04-01B-7

Suspension, Front, 4x2 ..... 04-01A-1
Adjustments 04-01A-37
Axle 04-01A-2
Axle Pivot Bracket, F-250 Heavy Duty and F-350 ..... 04-01A-28
Axle Pivot Bushing 04-01A-29
Axle, Front, F-Super Duty 04-01A-27
Axle, I-Beam, Front 04-01A-28
Ball Joint, F-250 Heavy Duty and F-350 ..... 04-01A-21
Bumper, Front, F-250 Heavy Duty and F-350 ..... 04-01A-35
Bumper, Front, F-Super Duty Chassis Cab 04-01A-36
Bumper, Front, F-Super Duty Motorhome Chassis 04-01A-36
Bushing 04-01A-35
Bushing, Spindle, F-Super Duty 04-01A-22
Camber Adjuster, F-250 Heavy Duty and F-350 with Ball Joints 04-01A-24
Component Replacement 04-01A-2
Components 04-01A-1
Description and Operation 04-01A-1
Diagnosis and Testing 04-01A-4
Fasteners, Suspension 04-01A-2
Grease Seal and Bearing 04-01A-17
Insulators, Radius Arm 04-01A-27
Radius Arm 04-01A-25
Removal and Installation 04-01A-5
Sensor Indicator, Anti-Lock Brake 04-01A-18
Shock Absorber 04-01A-2
Shock Absorber, F-250 Heavy Duty and F-350 ..... 04-01A-19
Shock Absorber, F-Super Duty 04-01A-19
Special Service Tools/Equipment 04-01A-39
Specifications 04-01A-38
Spring, Coil, F-250 Heavy Duty and F-350 ..... 04-01A-5

Suspension, Front, 4x2 (Continued)
Spring, F-Super Duty 04-01A-6
Stabilizer Bar, F-250 Heavy Duty and F-350 ..... 04-01A-31
Stabilizer Bar, F-Super Duty Chassis Cab 04-01A-33
Stabilizer Bar, F-Super Duty Motorhome Chassis 04-01A-34
Suspension 04-01A-1
Suspension and Wheel Hubs, Front 04-01A-4
Track Bar, F-Super Duty Chassis Cab 04-01A-31
Wheel Bearing and Wheel Hub 04-01A-4
Wheel Bearings 04-01A-37
Wheel Hub Bolt 04-01A-20
Wheel Spindle, F-250 Heavy Duty and F-350 ..... 04-01A-12
Wheel Spindle, F-Super Duty 04-01A-14

Suspension, Rear 04-02-1
Adjustments 04-02-9
Alignment 04-02-9
Component Replacement 04-02-1
Components 04-02-1
Description and Operation 04-02-1
Diagnosis and Testing 04-02-2
Inspection 04-02-1
Inspection and Verification 04-02-2
Pinion Angle, Rear Axle 04-02-9
Rear Axle Assembly 04-02-1
Rear Spring 04-02-1
Rear Spring Anti-Squeak Insert 04-02-10
Removal and Installation 04-02-2
Shock Absorber 04-02-1
04-02-7
Special Service Tools/Equipment 04-02-11
Specifications 04-02-10
Spring 04-02-2
Stabilizer Bar 04-02-1
04-02-7
Suspension 04-02-1
Suspension, Rear 04-02-2
Symptom Chart 04-02-2
Vehicle Lean, F-250, F-350 4x2 and 4x4, F-Super Duty Chassis Cab 04-02-10
Vehicle Lean, F-Super Duty Motorhome 04-02-10
Wheel Hub Bolt, Rear 04-02-9

Suspension, Service 04-00-1
Adjustments 04-00-15
Camber 04-00-2

Official Licensed Product

Alphabetical Index

Suspension, Service (Continued)
Caster 04-00-2
Caster and Camber, F-250 Heavy Duty and F-350 4x2 Ball Joint System 04-00-16
Caster and Camber, F-250 Heavy Duty and F-350 4x4 Vehicles 04-00-17
Caster and Camber, F-Super Duty Monobeam Non-Driving Axle 04-00-18
Caster, F-250 Heavy Duty and F-350 04-00-18
Component Test 04-00-15
Description and Operation 04-00-1
Diagnosis and Testing 04-00-3
Dogtracking 04-00-3
Front Lean 04-00-19
Front Wheel Alignment Specifications 04-00-20
Front Wheel Turn Angle Specifications 04-00-20
Inspection and Verification 04-00-3
Pinpoint Tests 04-00-11
Rear Lean 04-00-20
Special Service Tools/Equipment 04-00-21
Specifications 04-00-20
Steering Stop 04-00-20
Suspension 04-00-3
Symptom Chart 04-00-7
Toe 04-00-2
04-00-18
Vehicle Lean Correction 04-00-19
Wheel Alignment, Front 04-00-1
04-00-15
Wheel Bearings, Front 04-00-15

T

Trim, Exterior 01-08-1
Body Side Protection 01-08-4
Door, Headlamp 01-08-1
Mouldings, Exterior 01-08-4
Removal and Installation 01-08-1
Specifications 01-08-6
Step, Cab 01-08-4
Vent Panel, Cowl Top 01-08-2

Trim, Interior 01-05-1
Door Electrical Connections 01-05-9
Map Pocket and Trim 01-05-11
Moulding, Garnish, Tool Usage 01-05-1
Mouldings, Interior 01-05-1

Trim, Interior (Continued)
Removal and Installation 01-05-1
Special Service Tools/Equipment 01-05-11
Specifications 01-05-11
Trim Panel 01-05-4
Trim Panel, Aft Seat 01-05-9
Trim Panel, Door 01-05-7

W

Wheels and Tires 04-04-1
Anti-Theft 04-04-2
Center Attached Wheel Covers 04-04-11
Cleaning 04-04-14
Cleaning and Inspection 04-04-13
Description and Operation 04-04-1
Diagnosis and Testing 04-04-5
During Tire Changes 04-04-15
During Tire Inspection 04-04-15
Flange Area 04-04-14
Hub and Rotor, Four-Wheel Disc Brake 04-04-4
Inspection and Verification 04-04-5
Leaks 04-04-14
Lug Nuts 04-04-2
Maintenance and Protection in Corrosive Environments 04-04-15
Precautions 04-04-10
Precautions When Servicing Truck Tires 04-04-3
Removal and Installation 04-04-9
Replacement 04-04-10
Road Test 04-04-6
Safety 04-04-3
Special Service Tools/Equipment 04-04-18
Specifications 04-04-16
Symptom Chart 04-04-7
Tire 04-04-10
Tire Inflation 04-04-15
Tire Maintenance 04-04-15
Tire Rotation 04-04-16
Tire Service 04-04-10
Tire Sizes 04-04-14
Tires 04-04-1
04-04-14
Tread Wear Indicators 04-04-16
Valves 04-04-14
Vehicle, New, Break-In 04-04-4
Wheel and Tire 04-04-9

Alphabetical Index

Wheels and Tires (Continued)
Wheel and Tire Assemblies 04-04-1
Wheel and Tire Checking Procedure 04-04-5
Wheel and Tire Indexing 04-04-16
Wheel Assembly 04-04-2
Wheel Covers 04-04-10
Wheel Covers, Wheel Ornamentation 04-04-14
Wheel Installation 04-04-10
Wheel Maintenance 04-04-15
Wheel Ornaments 04-04-10
Wheel Replacement, Front 04-04-11
Wheel Replacement, Rear 04-04-12
Wheels 04-04-2
04-04-13

Wiper and Washer Systems 01-16-1
Adjustments 01-16-15
Component Tests 01-16-7
Diagnosis and Testing 01-16-1
Electrical Schematic Reference(s) 01-16-1
Inspection and Verification 01-16-1
Mounting Arm and Pivot Shaft 01-16-9

Wiper and Washer Systems (Continued)
Park Position 01-16-16
Pivot Arm 01-16-11
Removal and Installation 01-16-9
Special Service Tools/Equipment 01-16-16
Specifications 01-16-16
Symptom Chart 01-16-1
Washer Nozzle Jet and Bracket 01-16-13
Washer Pump and Reservoir 01-16-13
Washer System, Windshield, Class A Motorhome Chassis 01-16-15
Windshield Washer Pump, Seal and Impeller Assembly 01-16-15
Windshield Wiper 01-16-9
Windshield Wiper Arm and Blade Assembly, Class A Motorhome Chassis 01-16-15
Windshield Wiper Control Module 01-16-12
Windshield Wiper Pivot Arm and Windshield Wiper Blade 01-16-16
Wiper and Washer Systems 01-16-1
Wiper Motor 01-16-12

Ford Motor Company

WE WANT TO HEAR FROM YOU

Your suggestions will help us to improve future editions of this manual.

Instructions:

- Use only one form for each publication
- Use separate form for each concern
- **Do not** use this form to order publications
- Mail the completed form to the address on the reverse side

OR

- FAX the completed form to (313) 390-8727

Date:_____

Publication:

- ☐ Passenger Car Workshop Manual
- ☐ Owner Guide
- ☐ Wiring Diagram
- ☐ Body Repair Manual
- ☐ Truck Workshop Manual
- ☐ PC/ED Manual
- ☐ EVTM

Vehicle Line:_____ **Model Year:**_____

Please check the area in which the concern is located in the publication:

- ☐ Service Information
- ☐ Body
- ☐ Frame and Mounting
- ☐ Engine
- ☐ Suspension
- ☐ Driveline
- ☐ Brakes
- ☐ Transmission/Transaxle
- ☐ Clutch
- ☐ Exhaust
- ☐ Fuel
- ☐ Climate Control
- ☐ Instrumental Warning
- ☐ Battery/Charging
- ☐ Audio
- ☐ Lighting
- ☐ Electrical
- ☐ Schematics
- ☐ Pinpoint Test

Official Licensed Product
Ford Motor Company

Section and Pages:_____

Explain your concern or suggestion below: ***(Please print)***

_____

_____

_____

_____

What do you think is the main cause of your concern?

- ☐ Missing Information
- ☐ Inaccurate Information
- ☐ Incomplete Information

Please tell us who you are: *(Please print)*

Your Name:_____

Company Name:_____

Street:_____

City:_____ **State:**_____ **Zip/Postal Code:**_____

Phone Number:_____ **FAX Number:**_____

Occupation: *(Please mark box)*

- ☐ Ford Dealership Technician
- ☐ Home Mechanic
- ☐ Technician - Other than Ford Dealership
- ☐ Ford Dealership Service Manager
- ☐ Engineer
- ☐ Other:_____

Are there features of this publication that you would like to see changed or expanded?

- ☐ Organization
- ☐ Technical Detail
- ☐ Format and Style
- ☐ Other:_____

How would you suggest we change the publication?

_____

_____

_____

DO NOT STAPLE — USE TRANSPARENT TAPE

Official Licensed Product
Ford Motor Company

NO POSTAGE
NECESSARY
IF MAILED
IN THE
UNITED STATES

BUSINESS REPLY MAIL

FIRST CLASS PERMIT NO. 400 DEARBORN, MI

POSTAGE WILL BE PAID BY ADDRESSEE

Technical Service Publications
Service Manual
P.O. Box 2592
Dearborn, MI 48123-2592

WE WANT TO HEAR FROM YOU

Your suggestions will help us to improve future editions of this manual.

Instructions:

- Use only one form for each publication
- Use separate form for each concern
- **Do not** use this form to order publications
- Mail the completed form to the address on the reverse side

OR

- FAX the completed form to (313) 390-8727

Date:_____

Publication:

- ☐ Passenger Car Workshop Manual
- ☐ Owner Guide
- ☐ Wiring Diagram
- ☐ Body Repair Manual
- ☐ Truck Workshop Manual
- ☐ PC/ED Manual
- ☐ EVTM

Vehicle Line:_____ **Model Year:**_____

Please check the area in which the concern is located in the publication:

- ☐ Service Information
- ☐ Body
- ☐ Frame and Mounting
- ☐ Engine
- ☐ Suspension
- ☐ Driveline
- ☐ Brakes
- ☐ Transmission/Transaxle
- ☐ Clutch
- ☐ Exhaust
- ☐ Fuel
- ☐ Climate Control
- ☐ Instrumental Warning
- ☐ Battery/Charging
- ☐ Audio
- ☐ Lighting
- ☐ Electrical
- ☐ Schematics
- ☐ Pinpoint Test

Official Licensed Product
Ford Motor Company®

Section and Pages:_____

Explain your concern or suggestion below: ***(Please print)***

_____

_____

_____

_____

What do you think is the main cause of your concern?

- ☐ Missing Information
- ☐ Inaccurate Information
- ☐ Incomplete Information

Please tell us who you are: *(Please print)*

Your Name:_____

Company Name:_____

Street:_____

City:_____ **State:**_____ **Zip/Postal Code:**_____

Phone Number:_____ **FAX Number:**_____

Occupation: *(Please mark box)*

- ☐ Ford Dealership Technician
- ☐ Home Mechanic
- ☐ Technician - Other than Ford Dealership
- ☐ Ford Dealership Service Manager
- ☐ Engineer
- ☐ Other:_____

Are there features of this publication that you would like to see changed or expanded?

- ☐ Organization
- ☐ Technical Detail
- ☐ Format and Style
- ☐ Other:_____

How would you suggest we change the publication?

_____

_____

_____

DO NOT STAPLE — USE TRANSPARENT TAPE

Official Licensed Product
Ford Motor Company

NO POSTAGE
NECESSARY
IF MAILED
IN THE
UNITED STATES

BUSINESS REPLY MAIL

FIRST CLASS PERMIT NO. 400 DEARBORN, MI

POSTAGE WILL BE PAID BY ADDRESSEE

Technical Service Publications
Service Manual
P.O. Box 2592
Dearborn, MI 48123-2592

Navigation Tools: Click on the “Table of Contents” below, or use the Bookmarks to the left.

TABLE OF CONTENTS

INTRODUCTION

GROUP 02 ENGINE/TRANSMISSION MOUNTING

GROUP 03 ENGINE

GROUP 05 DRIVELINE

GROUP 07 TRANSMISSION

GROUP 08 CLUTCH SYSTEM

GROUP 10 FUEL SYSTEM

INDEX

Ford Motor Company

All rights reserved. Reproduction by any means, electronic or mechanical, including photocopying, recording, or by any information storage and retrieval system or translation in whole or part is not permitted without written authorization from Ford Motor Company. Copyright © 1996, Ford Motor Company

INTRODUCTION

NOTE: The descriptions and specifications contained in this manual were in effect at the time this manual was approved for printing. Ford Motor Company reserves the right to discontinue models at any time, or change specifications or design without notice and without incurring any obligation.

IMPORTANT SAFETY NOTICE

Appropriate service methods and procedures are essential for the safe, reliable operation of all motor vehicles as well as the personal safety of the individual doing the work. This manual provides general directions for performing service with tested, effective techniques. Following them will help assure reliability.

There are numerous variations in procedure, techniques, tools and parts for servicing vehicles, as well as in the skill of the individual doing the work. This manual cannot possibly anticipate all such variations and provide advice or cautions as to each. Accordingly, anyone who departs from the instructions provided in this manual must first establish that he comprises neither his personal safety nor the vehicle integrity by his choice of methods, tools or parts.

NOTES, CAUTIONS, AND WARNINGS

As you read through the procedures, you will come across **NOTES**, **CAUTIONS**, and **WARNINGS**. Each one is there for a specific purpose. **NOTES** give you added information that will help you to perform a particular procedure. **CAUTIONS** are given to prevent you from making an error that could damage the vehicle. **WARNINGS** remind you to be especially careful in those areas where carelessness can cause you personal injury. The following list contains some general **WARNINGS** that you should follow when you work on a vehicle.

- **ALWAYS WEAR SAFETY GLASSES FOR EYE PROTECTION.**
- **USE SAFETY STANDS WHENEVER A PROCEDURE REQUIRES YOU TO BE UNDER THE VEHICLE.**
- **MAKE SURE THAT THE IGNITION SWITCH IS ALWAYS IN THE OFF POSITION, UNLESS OTHERWISE REQUIRED BY THE PROCEDURE.**
- **SET THE PARKING BRAKE WHEN WORKING ON THE VEHICLE. IF YOU HAVE AN AUTOMATIC TRANSMISSION, SET IN PARK UNLESS INSTRUCTED OTHERWISE FOR A SPECIFIC OPERATION. IF YOU HAVE A MANUAL TRANSMISSION, IT SHOULD BE IN REVERSE (ENGINE OFF) OR NEUTRAL (ENGINE ON) UNLESS INSTRUCTED OTHERWISE FOR A SPECIFIC OPERATION. PLACE WOOD BLOCKS (4" X 4" OR LARGER) AGAINST THE FRONT AND REAR SURFACES OF THE TIRES TO HELP PREVENT THE VEHICLE FROM MOVING.**
- **OPERATE THE ENGINE ONLY IN A WELL-VENTILATED AREA TO AVOID THE DANGER OF CARBON MONOXIDE POISONING.**
- **KEEP YOURSELF AND YOUR CLOTHING AWAY FROM MOVING PARTS WHEN THE ENGINE IS RUNNING, ESPECIALLY THE DRIVE BELTS.**
- **TO PREVENT SERIOUS BURNS, AVOID CONTACT WITH HOT METAL PARTS SUCH AS THE RADIATOR, EXHAUST MANIFOLD, TAIL PIPE, THREE-WAY CATALYTIC CONVERTER AND MUFFLER.**
- **DO NOT SMOKE WHILE WORKING ON A VEHICLE.**
- **TO AVOID INJURY, ALWAYS REMOVE RINGS, WATCHES, LOOSE HANGING JEWELRY AND LOOSE CLOTHING BEFORE BEGINNING TO WORK ON A VEHICLE.**
- **WHEN IT IS NECESSARY TO WORK UNDER THE HOOD, KEEP HANDS AND OTHER OBJECTS CLEAR OF THE RADIATOR FAN BLADES!**

ENGINE AND TRANSMISSION MOUNTING

GROUP 02

SECTION 02-03 Engine and Transmission Mounting

SUBJECT	PAGE
VEHICLE APPLICATION	02-03-1
REMOVAL	
Support Bracket, Transmission	02-03-2
Support Insulator, Rear Transmission	02-03-2
Support Insulators, Front Engine	02-03-1
REMOVAL (Cont'd.)	
Support Insulators, Front Engine, 7.3L Diesel	02-03-2
SPECIFICATIONS	02-03-11
SPECIAL SERVICE TOOLS/EQUIPMENT	02-03-12

Official Licensed Product Ford Motor Company

VEHICLE APPLICATION

F-250 Heavy Duty, F-350 and F-Super Duty

REMOVAL

Support Insulators, Front Engine

Removal

1. Remove the radiator overflow hose from the radiator coolant recovery reservoir and detach it from the fan shroud (8146) (where appropriate).
2. Remove the fan shroud retaining screws and lift the fan shroud back and drape it onto the fan blade (8600).
3. Support the engine (6007) using a wood block and a jack placed under the oil pan (6675).
4. Remove the nuts and washers attaching the insulators to the crossmember brackets. Lift the engine sufficiently to disengage the insulator stud from the engine crossmember bracket(s).
5. Remove bolt attaching fuel pump shield to left engine bracket, if required.
6. Remove insulator-to-engine or engine bracket retaining nut and washer assembly. Remove engine mount.

Installation

1. Follow removal procedure in reverse order.
2. Refer to the appropriate illustration for tightening specifications.

REMOVAL (Continued)

Support Insulators, Front Engine, 7.3L Diesel

SPECIAL SERVICE TOOL(S) REQUIRED

Description	Tool Number
Fan Clutch Pulley Holder	T83T-6312-A
Fan Clutch Nut Wrench	T83T-6312-B

Removal

1. Disconnect the ground cables from both batteries.
2. Remove the fan shroud retaining screws and lift the fan shroud (8146) back and drape it onto the fan blade (8600).
3. Remove the fan and clutch assembly using Fan Clutch Pulley Holder T83T-6312-A and Fan Clutch Nut Wrench T83T-6312-B.
4. Raise vehicle.
5. For the right mount, disconnect the wiring to the starter and remove the starter motor.
6. Remove the nuts retaining the engine mount insulators to the front engine support brackets (6029).
7. Raise the engine and support it using a wood block and a jack placed under the oil pan.
8. Remove the engine mount insulator to engine bolts, and the bolts securing the front engine supports to the frame crossmember.
9. Remove the engine front supports and front support bracket together.

Installation

1. Install the engine front supports and front support brackets together.
2. Install the engine mount insulator to engine bolts, and the bolts securing the front engine supports to the frame crossmember. Tighten to specifications.
3. Lower the engine onto the mounts and install the nuts retaining the engine mounts to the front engine support brackets. Tighten to specifications.
4. If the right mount was removed, install the starter motor and connect the starter motor wiring.
5. Lower the vehicle.
6. Install the fan and clutch assembly using Fan Clutch Pulley Holder T83T-6312-A and Fan Clutch Nut Wrench T83T-6312-B. Tighten nut to 54-163 N·m (40-120 lb-ft).
7. Install the fan shroud and tighten the retaining screws to specifications.
8. Connect the ground cables to both batteries.

Support Bracket, Transmission

Removal

1. Support the engine (6007) using a wood block and jack placed under the oil pan (6675).
2. Remove the nuts and washers retaining the insulators to the crossmember bracket(s). Lift the engine sufficiently to disengage the insulator stud from the engine crossmember bracket(s).
3. Remove the bolts and nuts holding the support brackets to the crossmember.
4. Remove the support bracket(s) from the crossmember.

Installation

1. Follow removal procedure in reverse order.
2. Refer to the appropriate illustration for tightening specifications.

Support Insulator, Rear Transmission

Removal

1. Place a block of wood and a jack under the transmission (7003).
2. Remove the two nuts retaining the insulator to the crossmember. Remove the damper assembly from the transmission crossmember. Raise the transmission sufficiently to lift the insulator from the crossmember.
3. On vehicles so equipped, remove the fasteners retaining the exhaust hanger to the rear engine mount.
4. Remove the two bolts retaining the insulator to the transmission and remove the insulator and retainer assembly.

Installation

1. Position the insulator and retainer assembly to the transmission. Install the two retaining bolts and tighten to specification.
2. If so equipped, install the fasteners retaining the exhaust hanger to the insulator. Tighten to 17-23 N·m (13-17 lb-ft).
3. Lower the transmission and install the damper assembly and insulator-to-front crossmember retaining nuts. Tighten to 81-108 N·m (60-80 lb-ft).
4. Remove the jack and wood block from under the transmission.

Licensed Photo Ford Motor Company

REMOVAL (Continued)

Engine Front Supports and Insulator Assembly, F-250 Heavy Duty and F-350 with 5.8L Engine

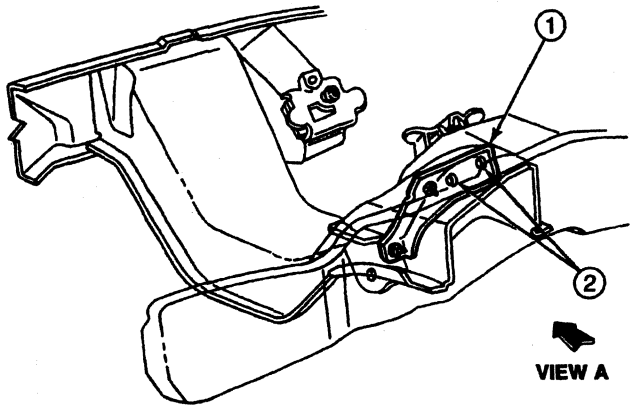

F-250 (4X4) HEAVY DUTY/TWIN I-BEAM FRONT SUSPENSION ONLY

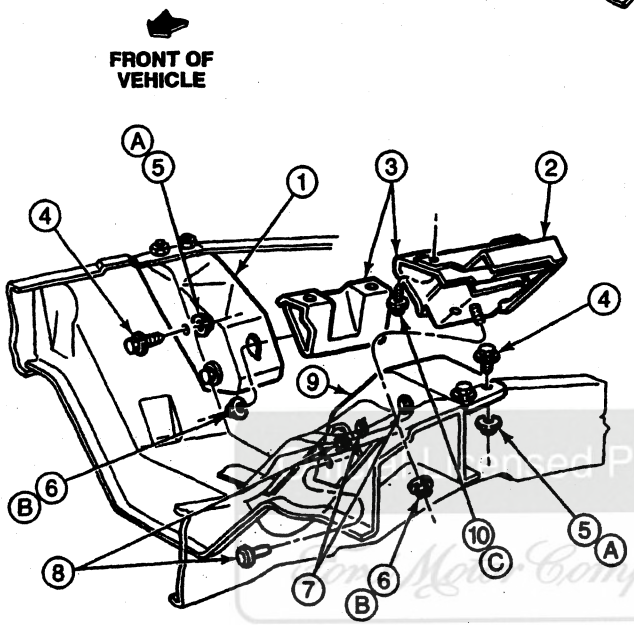

COIL SPRING SUSPENSION SHOWN

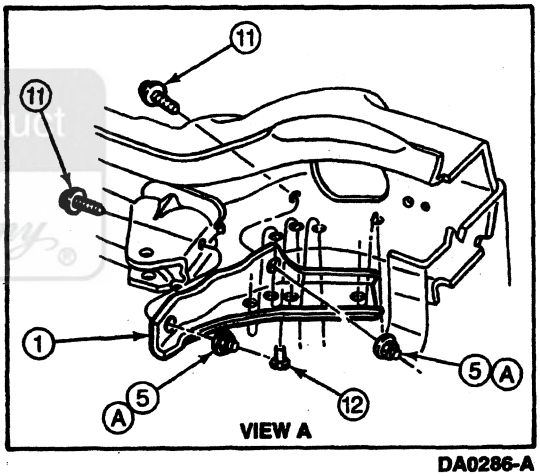

DA0286-A

Item	Part Number	Description
1	6028	Front Engine Support Bracket
2	6D037	Shield
3	6038	Front Engine Support Insulator
4	N802114-S2	Bolt
5	N800937-S7	Nut
6	N807479-S301	Nut and Washer
7	65090-S	Rivet
8	65094-S	Rivet

(Continued)

Item	Part Number	Description
9	6061	Engine Support Bracket
10	387811-S100	Bolt
11	N802114-S2	Bolt
12	65094-S	Rivet
A	—	Tighten to 60-80 N·m (44-59 Lb-Ft)
B	—	Tighten to 96-127 N·m (71-94 Lb-Ft)
C	—	Tighten to 81-108 N·m (60-80 Lb-Ft)

REMOVAL (Continued)

Engine Front Supports and Insulator Assembly, F-250 Heavy Duty, F-350 and F-Super Duty with 7.5L Gasoline Engine and 7.3L Diesel Engine

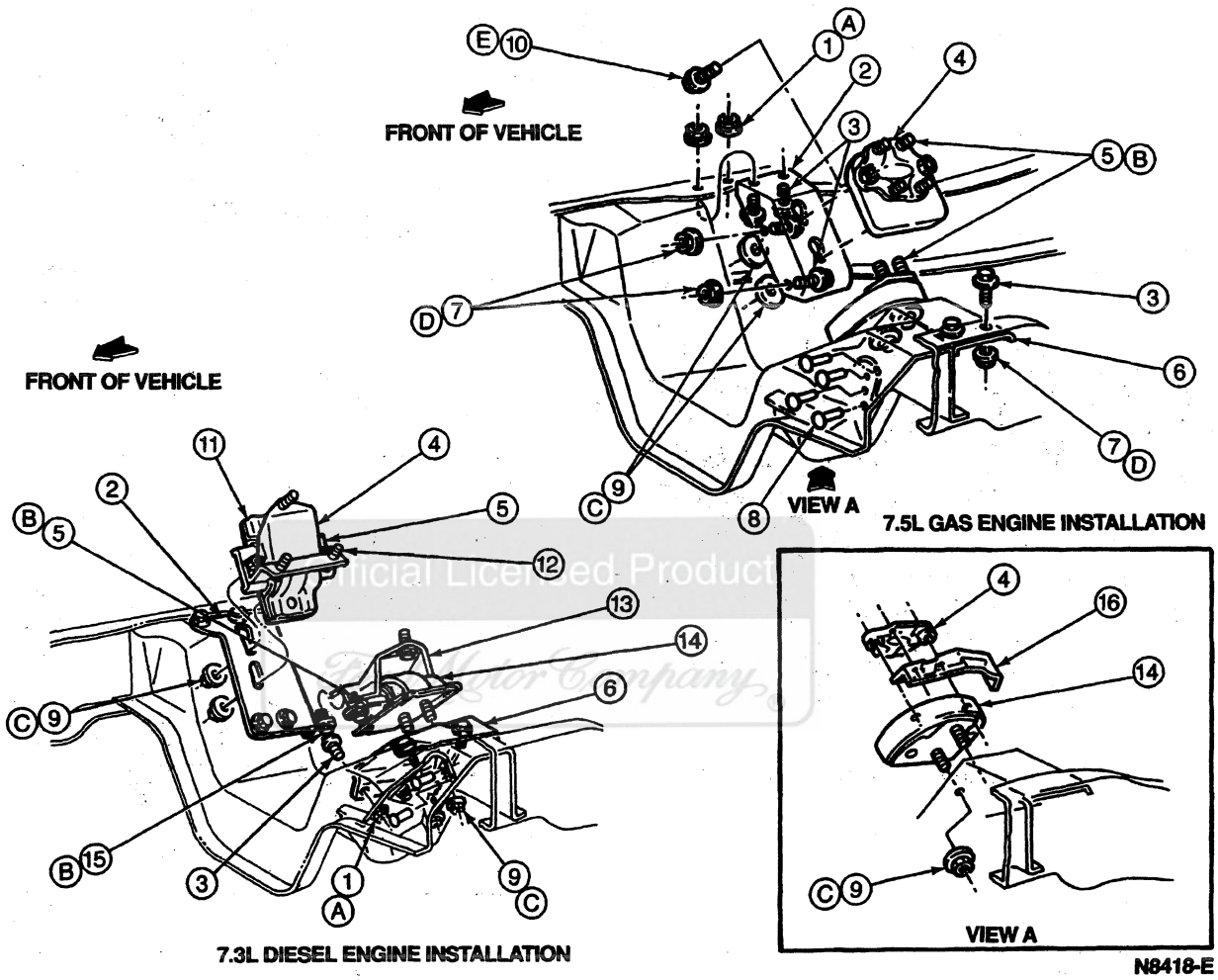

Item	Part Number	Description
1	N800937-S7	Nut
2	6028	Front Engine Support Bracket (RH)
3	N802114	Bolt
4	6046	Engine Support Mounting Bracket
5	387811-S100	Screw and Washer
6	6061	Engine Support Bracket (LH)
7	N800937-S7	Nut
8	65090	Rivet
9	N807479-S301	Nut and Washer
10	N803203-S100	Bolt
11	6046	Engine Support Insulator (RH)

(Continued)

Item	Part Number	Description
12	389696	Bolt, Bracket-to-Engine
13	6B033	Engine Support Mounting Bracket
14	6B032	Engine Support Insulator (LH)
15	387811-S100	Screw and Washer
16	6D037	Engine Mount Heat Shield (LH)
A	—	Tighten to 53-72 N·m (39-53 Lb-Ft)
B	—	Tighten to 81-108 N·m (60-80 Lb-Ft)
C	—	Tighten to 88-118 N·m (65-87 Lb-Ft)

(Continued)

REMOVAL (Continued)

Item	Part Number	Description
D	—	Tighten to 53-72 N·m (39-53 Lb-Ft)

(Continued)

Item	Part Number	Description
E	—	Tighten to 109-149 N·m (80-110 Lb-Ft)

Engine Front Supports and Insulator Assembly, F-Super Duty Motorhome Chassis, 7.5L Engine

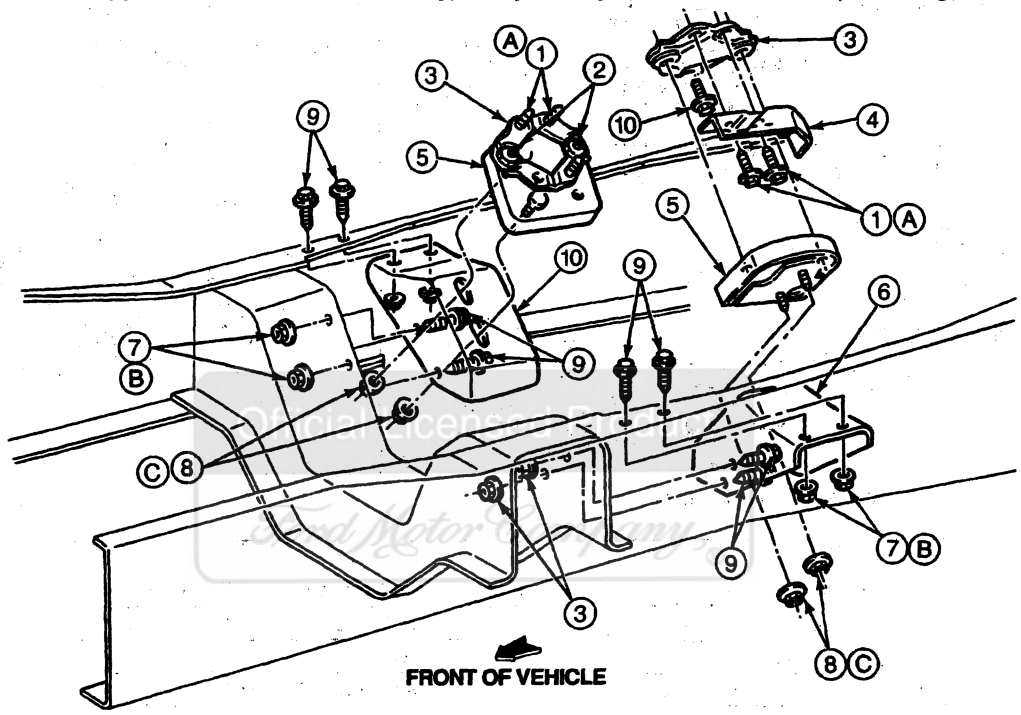

N9724-C

Item	Part Number	Description
1	387811-S100	Screw and Washer
2	N803203-S100	Bolt
3	6046	Engine Support Mounting Bracket
4	6C038	Engine Mount Heat Shield
5	6B032	Engine Support Insulator
6	6061	Engine Support Bracket (LH)
7	N800937-S2	Nut

(Continued)

Item	Part Number	Description
8	N801995-S2	Nut and Washer
9	N802114-S2	Bolt
10	6037	Engine Support Bracket (RH)
A	—	Tighten to 60-80 N·m (44-59 Lb-Ft)
B	—	Tighten to 60-95 N·m (44-70 Lb-Ft)
C	—	Tighten to 88-118 N·m (65-87 Lb-Ft)

REMOVAL (Continued)

Support Bracket, Transmission, F-250 Heavy Duty and F-350 Regular Cab and SuperCab, F-Super Duty 4x2

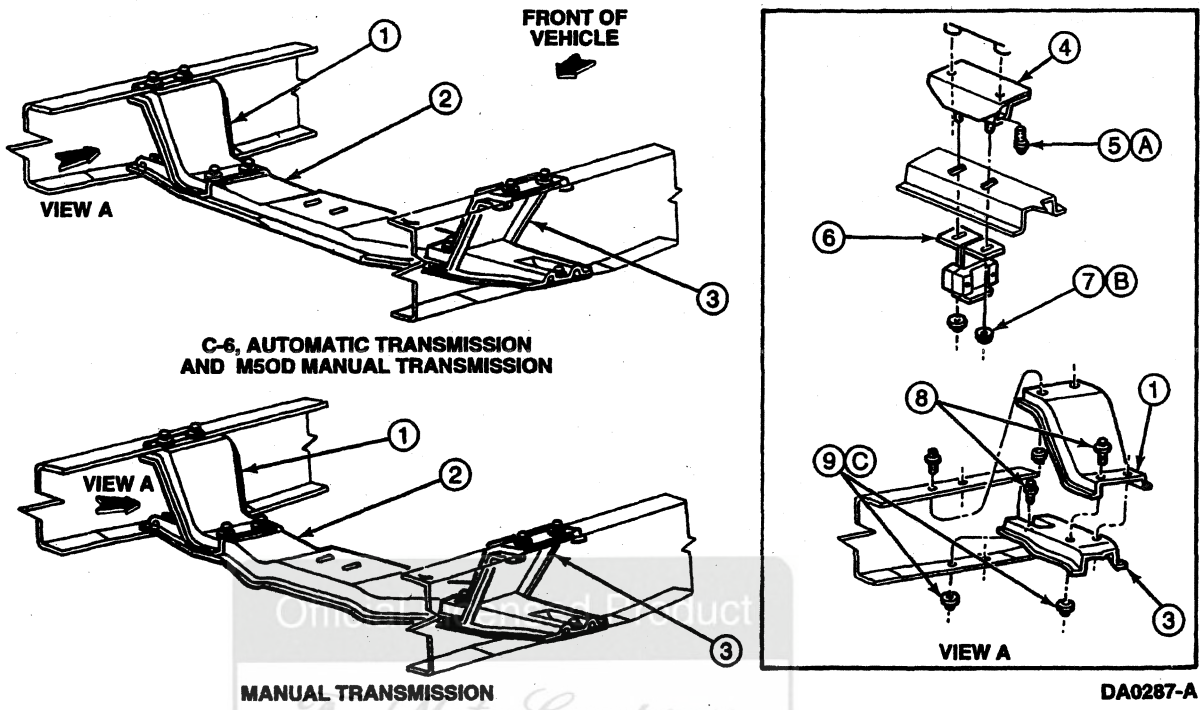

Item	Part Number	Description
1	6096	Engine Support Bracket (RH)
2	6A023	Engine Support
3	6096	Engine Support Bracket (LH)
4	6D091	Engine Support Insulator
5	391558-S2	Screw and Washer
6	4A263	Damper (F-250, 7.3L 4x2 with Manual Transmission and F-350, 7.3L, 133-Inch Wheelbase, 4x2 with Manual Transmission)

(Continued)

Item	Part Number	Description
7	N621945-S2	Nut and Washer
8	N802114	Bolt
9	N800937-S7	Nut
A	—	Tighten to 81-108 N·m (60-80 Lb-Ft)
B	—	Tighten to 81-108 N·m (60-80 Lb-Ft)
C	—	Tighten to 60-95 N·m (44-70 Lb-Ft)

Ford Motor Company

REMOVAL (Continued)

Support Bracket, Transmission, F-350 and F-Super Duty Chassis Cab, All Transmissions Except E4OD

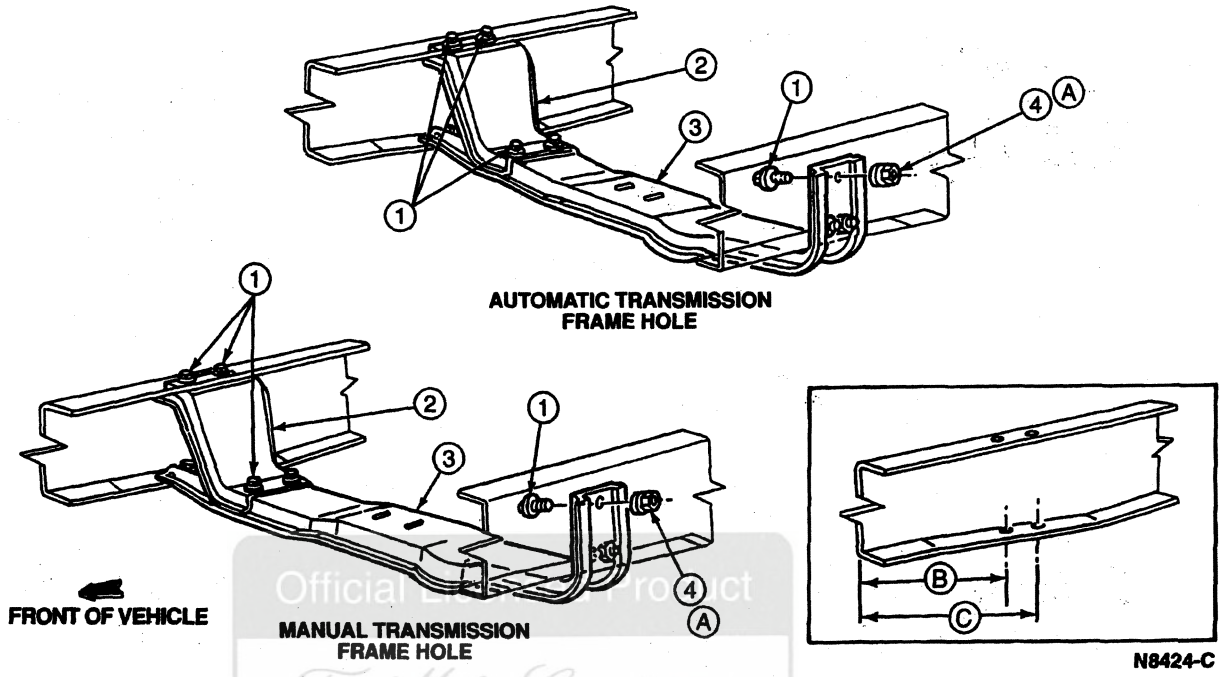

Item	Part Number	Description
1	N802114-S2	Bolt
2	6096	Engine Support Bracket (LH)
3	6A023	Engine Support
4	N800937-S7	Nut

(Continued)

Item	Part Number	Description
A	—	Tighten to 60-95 N·m (44-70 Lb-Ft)
B	—	1820.0 mm (72 Inches)
C	—	1852.3 mm (73 Inches)

Official Ford Product
Ford Motor Company

REMOVAL (Continued)

Support Bracket, Transmission, F-250 Heavy Duty 4x4

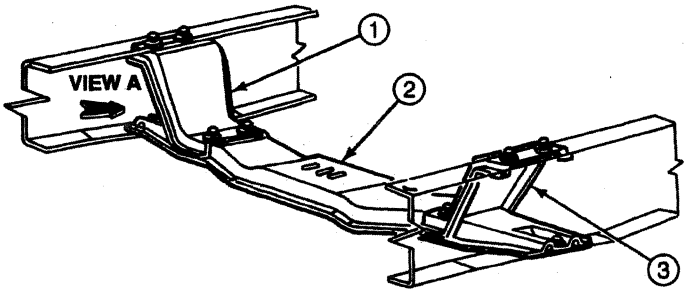

M5OD
MANUAL TRANSMISSION

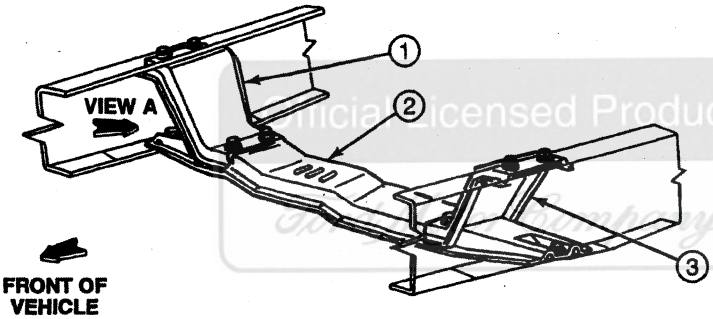

C-6
AUTOMATIC TRANSMISSION

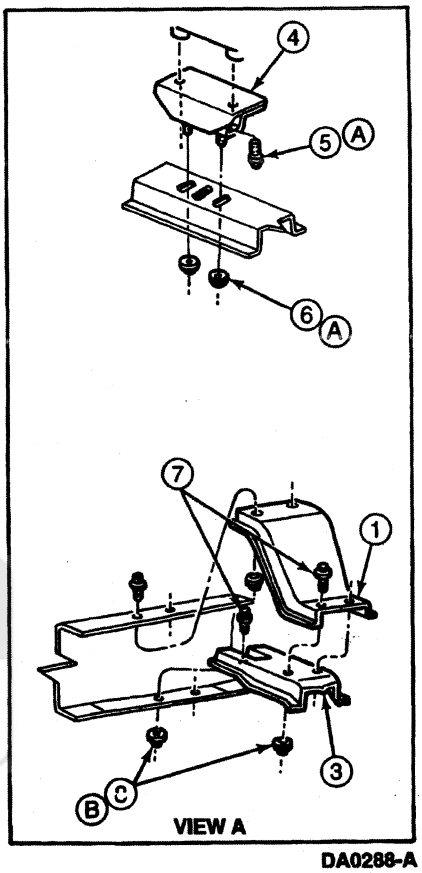

DA0288-A

Item	Part Number	Description
1	6096	Engine Support Bracket (RH)
2	6A023	Engine Support
3	6096	Engine Support Bracket (LH)
4	6D091	Engine Support Insulator
5	391558-S100	Screw and Washer
6	N621945	Nut

(Continued)

Item	Part Number	Description
7	N802114	Bolt
8	N800937	Nut
A	—	Tighten to 81-108 N·m (60-80 Lb-Ft)
B	—	Tighten to 60-95 N·m (44-70 Lb-Ft)

REMOVAL (Continued)

Support Bracket, Transmission, F-350 Chassis Cab 4x4

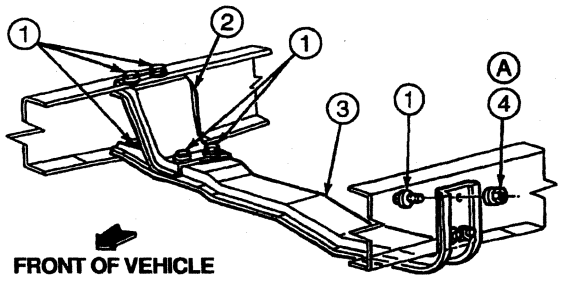

C-6 AUTOMATIC TRANSMISSION

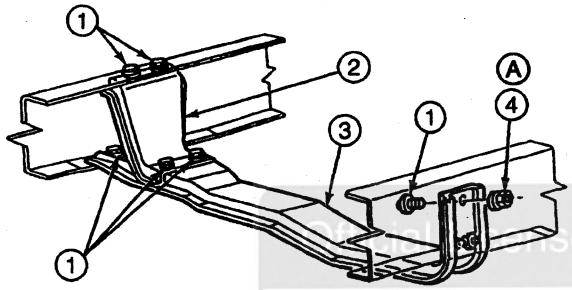

M5OD MANUAL TRANSMISSION

Item	Part Number	Description
1	N802114-S2	Bolt-Hex
2	6096	Engine Support Bracket (RH)

(Continued)

Item	Part Number	Description
3	6A023	Engine Support
4	N800937-S7	Nut
A	—	Tighten to 60-95 N·m (44-70 Lb-Ft)

Ford Motor Company

REMOVAL (Continued)

Support Bracket, Transmission, F-250 Heavy Duty, F-350 and F-Super Duty 4x2 with E4OD Transmission

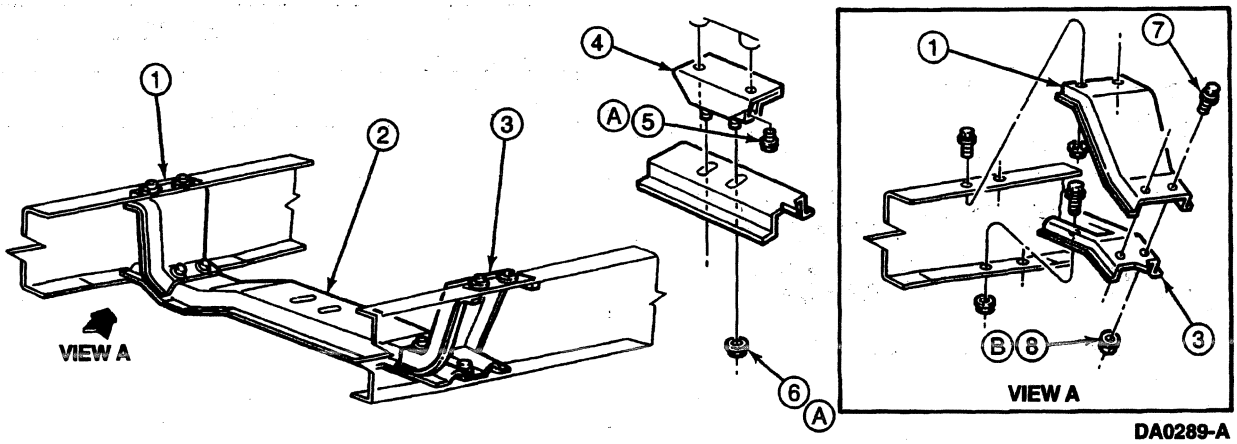

Item	Part Number	Description
1	6096	Engine Support Bracket (RH)
2	6A023	Engine Support
3	6096	Engine Support Bracket (LH)
4	6D091	Engine Support Insulator
5	391558-S100	Screw and Washer
6	N621945-S2	Nut and Washer

(Continued)

Item	Part Number	Description
7	N802114	Bolt
8	N800937-S7	Nut
A	—	Tighten to 81-108 N·m (60-80 Lb-Ft)
B	—	Tighten to 60-95 N·m (44-70 Lb-Ft)

Unlicensed Product Motor Company

Support Bracket, Transmission, F-250 Heavy Duty, F-350 and F-Super Duty 4x4 with E4OD Transmission

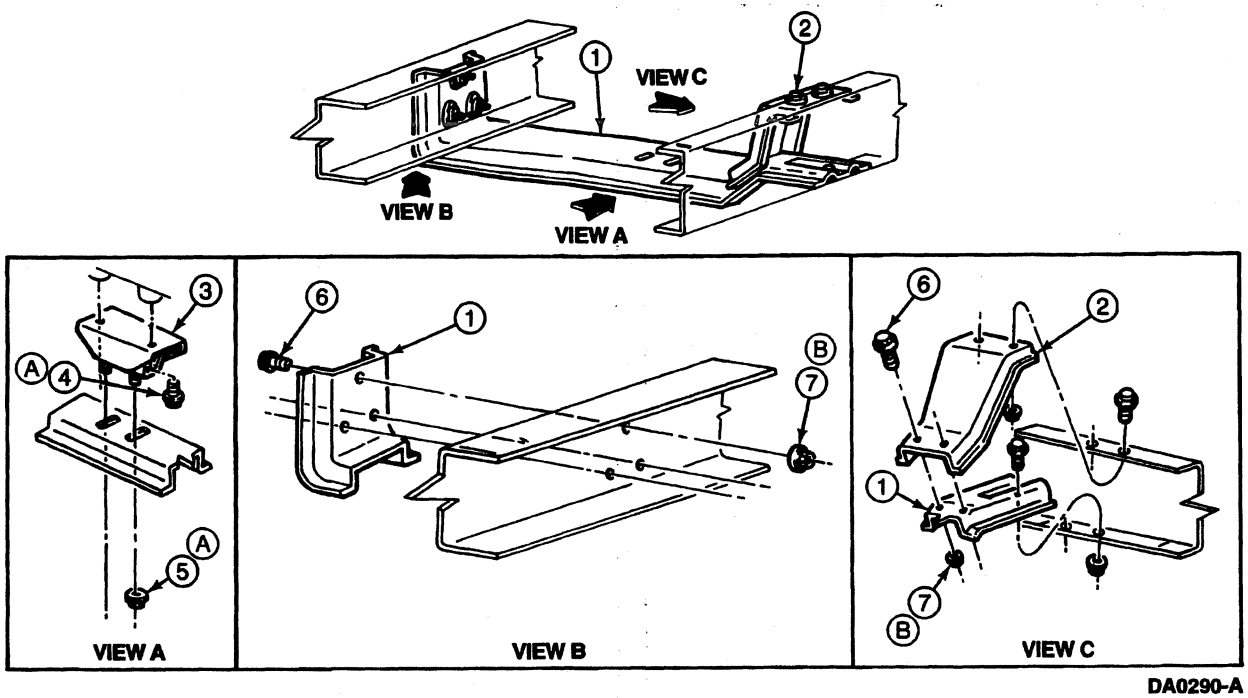

REMOVAL (Continued)

Item	Part Number	Description
1	6A023	Engine Support
2	6096	Engine Support Bracket (LH)
3	6D091	Engine Support Insulator
4	391558-S100	Screw and Washer
5	N621945-S2	Nut and Washer

(Continued)

Item	Part Number	Description
6	N802114	Bolt
7	N800937-S7	Nut
A	—	Tighten to 81-108 N·m (60-80 Lb-Ft)
B	—	Tighten to 60-95 N·m (44-70 Lb-Ft)

Support Bracket, Transmission, F-Super Duty Motorhome Chassis

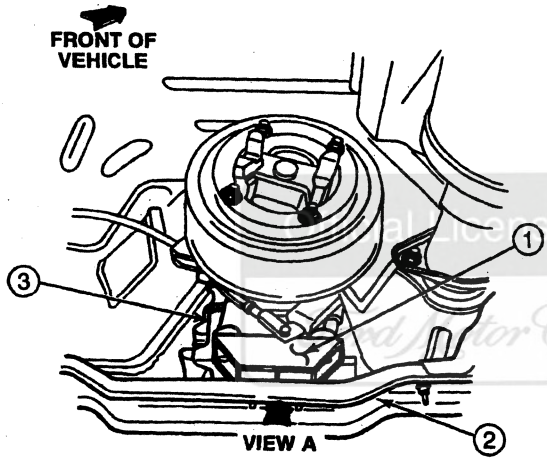

REAR ENGINE MOUNTS MAIN VIEW

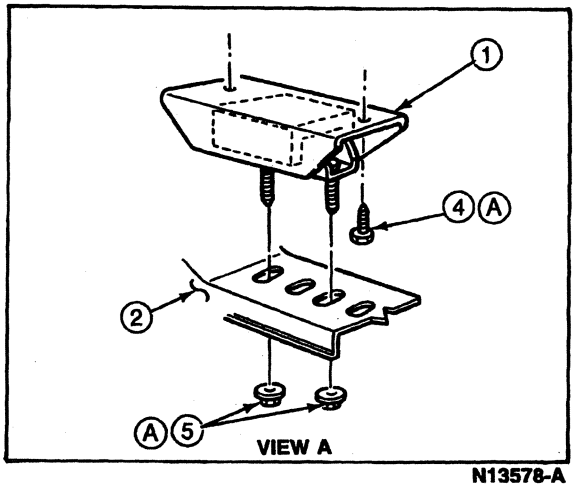

N13578-A

Item	Part Number	Description
1	6068	Transmission Support Insulator
2	5025	Crossmember

(Continued)

Item	Part Number	Description
3	7003	Transmission
4	390066-S2	Screw and Washer
5	N621945-S2	Nut and Washer
A	—	Tighten to 81-149 N·m (60-110 Lb-Ft)

SPECIFICATIONS

TORQUE SPECIFICATIONS

Description	N·m	Lb-Ft	Lb-In
Front Engine Support Insulator-to-Crossmember Bracket Retaining Nuts (7.3L Diesel)	88-118	65-87	—
Fan Shroud Retaining Screws (7.3L Diesel)	6-8	—	53-71
Exhaust Hanger-to-Rear Transmission Support Insulator Fasteners	17-23	13-17	—
Rear Transmission Support Insulator-to-Front Crossmember Nuts	81-108	60-80	—
Rear Engine Support to Crossmember Nut	81-108	60-80	—
Engine Support Bracket Nuts (5.8L Engines)	60-80	44-59	—
Engine Support Bracket (RH) Nuts (7.3L and 7.5L Engines)	39-53	44-70	—
Engine Support Mounting Bracket (7.3L and 7.5L Engines)	53-72	39-53	—
Engine Support Bracket (RH) Nut and Washer (7.3L and 7.5L Engines)	60-95	44-70	—
Engine Support Insulator (LH) Screw and Washer (7.5L Engine)	81-108	60-80	—
Engine Support Bracket (LH) Nut (7.5L Engine)	60-95	44-70	—
Engine Support Insulator Nut and Washer (7.5L Engine)	88-118	65-87	—

(Continued)

SPECIFICATIONS (Continued)

TORQUE SPECIFICATIONS (Cont'd)

Description	N·m	Lb-Ft	Lb-In
Engine Support Mounting Bracket (RH) Screw and Washer (7.3L Engine)	109-149	80-110	—
LH Engine Support Bracket-to-LH Engine Support Insulator Screw and Washer (7.3L Engine)	109-149	80-110	—
Engine Support Bracket (LH) Nut (7.3L Engine)	53-72	39-53	—
RH Engine Support Bracket-to-RH Engine Support Insulator Nut and Washer (7.3L Engine)	88-118	65-87	—
Damper Nut and Washer (4x2)	60-110	81-149	—
Engine Support Bracket (LH) Nuts (4x2)	60-95	44-70	—
Engine Support Nut	96-127	71-94	—
Engine Support Insulator Screw and Washer	88-118	65-87	—
Engine Support Bracket (LH) Nut	39-53	44-70	—

(Continued)

TORQUE SPECIFICATIONS (Cont'd)

Description	N·m	Lb-Ft	Lb-In
Cooling Fan Clutch Nut	54-163	40-120	—
Engine Support Bracket F-Super Duty Motorhome (7.5L Engine)	60-95	44-70	—

SPECIAL SERVICE TOOLS/EQUIPMENT

SPECIAL SERVICE TOOLS REQUIRED

Tool Number/ Description	Illustration
T83T-6312-A Fan Clutch Pulley Holder	T83T-6312-A
T83T-6312-B Fan Clutch Nut Wrench	T83T-6312-B

Official Licensed Product
Ford Motor Company

GROUP

ENGINE 03

SECTION TITLE	PAGE
AIR INTAKE SYSTEM	03-12-1
DRIVE BELTS, ACCESSORY	03-05-1
ENGINE CONTROLS, ELECTRONIC	03-14-1
ENGINE COOLING	03-03-1
ENGINE EMISSION CONTROL	03-08-1
ENGINE, SERVICE	03-00-1
ENGINE, 5.8L MFI	03-01A-1
ENGINE, 7.3L DIESEL	03-01C-1
ENGINE, 7.5L MFI	03-01B-1
EVAPORATIVE EMISSION	03-13-1
FUEL CHARGING AND CONTROLS, 5.8L ENGINE	03-04A-1
FUEL CHARGING AND CONTROLS, 7.3L DIESEL ENGINE	03-04C-1
FUEL CHARGING AND CONTROLS, 7.5L ENGINE	03-04B-1
GLOW PLUG SYSTEM	03-07B-1
IGNITION, DISTRIBUTOR	03-07A-1
STARTING SYSTEM	03-06-1
STARTING SYSTEM, DIESEL ENGINE	03-06B-1
STARTING SYSTEM, GASOLINE ENGINES	03-06A-1
TURBOCHARGER, 7.3L DIESEL ENGINE	03-04D-1

Official Licensed Product
Ford Motor Company

SECTION 03-00 Engine, Service

SUBJECT	PAGE
VEHICLE APPLICATION	03-00-2
DESCRIPTION AND OPERATION	
Engine Identification	03-00-3
Emission Calibration Number Label	03-00-3
Exhaust Emission Control System	03-00-4
Introduction	03-00-3
Safety Certification Decal	03-00-3
DIAGNOSIS AND TESTING	
Engine	03-00-4
Inspection and Verification	03-00-4
Symptom Chart	03-00-5
SERVICE PROCEDURES	
Camshaft End Play	03-00-15
Camshaft Journals	03-00-27
Cam Lobe Lift (Camshaft Removed)	03-00-28
Camshaft Bearings	03-00-28
Camshaft Journal Diameters	03-00-28
Camshaft Journal Oil Clearance	03-00-28
Camshaft Runout	03-00-27
Camshaft Sprocket	03-00-29
Cleaning	03-00-27
Inspection	03-00-27
Camshaft Lobe Lift	03-00-14
Hydraulic Valve Tappet	03-00-15
Compression Test	03-00-8
Compression Gauge Check	03-00-8
Compression Readings Interpreting — Gasoline Engines	03-00-9
Example Readings	03-00-9
Test Results	03-00-8
Connecting Rod Side Clearance	03-00-16
Connecting Rods	03-00-27
Cleaning	03-00-27
Inspection	03-00-27
Crankshaft	03-00-23
SERVICE PROCEDURES (Cont'd.)	
Cleaning	03-00-23
Crankshaft End Play	03-00-24
Crankshaft Runout	03-00-24
Crankshaft Sprocket	03-00-24
Inspection	03-00-23
Journals, Refinishing	03-00-24
Crankshaft End Play	03-00-16
Crankshaft Main and Connecting Rod	
Bearings	03-00-21
Cleaning	03-00-21
Inspection	03-00-22
Crankshaft Main or Connecting Rod Bearings,	
Fitting	03-00-22
Bore Gauge Method	03-00-23
Plastigage® Method	03-00-22
Cylinder Block	03-00-17
Cleaning and Inspection	03-00-17
Cylinder Block Distortion	03-00-17
Cylinder Head Deck Flatness	03-00-17
Flywheel Housing Deck Flatness	03-00-17
Main Bearing Bore Alignment	03-00-17
Sand Holes or Porous Engine Castings — Service	03-00-18
Cylinder Heads	03-00-32
Cleaning	03-00-32
Inspection	03-00-32
Cylinder Head Flatness	03-00-33
Spark Plug Thread Service	03-00-32
Valve Guides, Reaming	03-00-34
Valve Seat Runout	03-00-33
Valve Seats, Refacing	03-00-34
Valve Stem-to-Valve Guide Clearance	03-00-33
Valves	03-00-35

SECTION 03-00 Engine, Service

SUBJECT	PAGE
SERVICE PROCEDURES (Cont'd.)	
Valves, Select Fitting	03-00-34
Valves, Refacing	03-00-36
Valve Spring Squareness	03-00-36
Valve Spring Tension	03-00-36
Cylinder Leakage Detector	03-00-9
Cylinder Walls, Refinishing	03-00-18
Cleaning	03-00-18
Cylinder Bore	03-00-19
Cylinder Bore Diameter	03-00-20
Cylinder Bore Taper	03-00-19
Cylinder Out-of-Round	03-00-19
Cylinder Reboring	03-00-20
Cylinder Wall Honing	03-00-20
Inspection	03-00-18
Engine Block Plugs	03-00-20
Cup-Type	03-00-21
Expansion-Type	03-00-21
Removal and Installation	03-00-20
Engine Oil Consumption, Excessive	03-00-11
Oil Consumption Test	03-00-12
Oil Pressure Test	03-00-13
Engine Oil Leaks	03-00-7
Fluorescent Oil Additive Method	03-00-7
Pressure Method	03-00-7
Testing Procedure	03-00-7
Exhaust Manifold	03-00-37
Cleaning	03-00-37
Inspection	03-00-37
Flywheel Clutch Surface Machining	03-00-38
Flywheel Inspection	03-00-38
Transmission, Automatic	03-00-38
Transmission, Manual	03-00-38
Flywheel Runout, Manual Transmission	03-00-16
Hydraulic Valve Tappets	03-00-29
Cleaning	03-00-29
Inspection	03-00-29
Leak-Down Testing	03-00-29
Intake Manifold	03-00-37
Cleaning	03-00-37
Inspection	03-00-37
Intake Manifold Vacuum Test	03-00-10
Vacuum Gauge Readings, Interpretation	03-00-10
Leakage Points	03-00-7
Under Engine, with Vehicle on Hoist	03-00-8
Underhood	03-00-8
With Transmission and Flywheel Removed	03-00-8
Oil Leak and Valve Guide Seal Test	03-00-10

SUBJECT	PAGE
SERVICE PROCEDURES (Cont'd.)	
Oil Pan	03-00-32
Cleaning	03-00-32
Inspection	03-00-32
Oil Pump, 7.3L Diesel Engine	03-00-31
Hard Start — No Start Dry Reservoir	03-00-31
Oil Pump, Gasoline Engines	03-00-30
Cleaning	03-00-30
Inspection	03-00-30
Outer Rotor-to-Pump Body Clearance	03-00-31
Pressure Regulator Valve Inspection	03-00-31
Pressure Regulator Valve Spring Inspection	03-00-31
Pressure Regulator Valve-to-Housing Clearance	03-00-31
Rotor Clearance	03-00-31
Tooth Tip Clearance	03-00-31
Pistons, Piston Pins and Piston Rings	03-00-24
Cleaning	03-00-24
Inspection	03-00-24
Piston and Piston Pin Fit	03-00-26
Piston Pin-to-Piston Clearance	03-00-27
Piston Ring End Gap	03-00-26
Piston Rings — Fitting	03-00-25
Pistons — Fitting	03-00-24
Positive Crankcase Ventilation (PCV) System, Closed-Type	03-00-7
Push Rods	03-00-37
Cleaning	03-00-37
Inspection	03-00-37
Rocker Arm	03-00-37
Cleaning	03-00-37
Inspection	03-00-37
Service Limit Specifications	03-00-17
Timing Chain Deflection (5.8L and 7.5L)	03-00-15
Valve Train Analysis, Dynamic	03-00-14
Push Rods	03-00-14
Rocker Arm	03-00-14
Valves and Cylinder Head	03-00-14
Valve Train Analysis, Static (Engine Off)	03-00-13
Push Rods	03-00-13
Rocker Arm	03-00-13
Rocker Arm Cover Removed	03-00-13
Valve Spring Retainer and Valve Spring Retainer Keys	03-00-13
Valve Springs	03-00-13
Valves and Cylinder Head	03-00-13
SPECIFICATIONS	
Flywheel Dimensions	03-00-39
SPECIAL SERVICE TOOLS/EQUIPMENT	03-00-39

VEHICLE APPLICATION

F-250 Heavy Duty, F-350 and F-Super Duty

DESCRIPTION AND OPERATION

Introduction

This section covers various engine tests, adjustments, service procedures and cleaning / inspection procedures. Engine assembly and service specifications appear at the end of each engine Section 03-01A (5.8L MFI), Section 03-01B (7.5L MFI) or Section 03-01C (7.3L diesel).

For engine (6007) removal, disassembly, assembly, installation, adjustment procedures and specifications, refer to Section 03-01A (5.8L MFI), Section 03-01B (7.5L MFI) or Section 03-01C (7.3L diesel).

These engines incorporate a closed-type crankcase ventilation system and exhaust emission control system. All engine / emission control systems are covered in the 1996 Powertrain Control / Emissions Diagnosis Manual.[1]

To maintain the required exhaust emission levels, the fuel system, ignition system and engine must be kept in good operating condition and meet recommended adjustment specifications.

When performing tests, adjustment or service to the engine or fuel ignition system, it is essential to follow the procedures and specifications in the appropriate repair group in this manual, and in the 1996 Powertrain Control / Emissions Diagnosis Manual.[1]

Before replacing damaged or worn engine components such as the crankshaft (6303), cylinder heads (6049), valve guides, valves, camshaft (6250) or cylinder blocks (6010), make sure that part(s) is not serviceable.

WARNING: TO AVOID THE POSSIBILITY OF PERSONAL INJURY OR DAMAGE TO THE VEHICLE, DO NOT OPERATE THE ENGINE WITH THE HOOD (16612) OPEN UNTIL THE FAN HAS FIRST BEEN EXAMINED FOR POSSIBLE CRACKS AND SEPARATION.

Engine Identification

For quick engine identification, refer to the Vehicle Emission Control Information (VECI) Decal mounted under the hood (16612). This decal lists engine information required for proper servicing of the engine (6007). An engine identification label is also attached to the engine. The symbol code on the identification tag identifies each engine for determining parts usage, for instance, engine displacement and model year. Engine decal information is located in Section 03-01A (5.8L MFI), Section 03-01B (7.5L MFI) or Section 03-01C (7.3L diesel). The vehicle identification number (VIN) also gives engine information. The tenth digit identifies the engine.

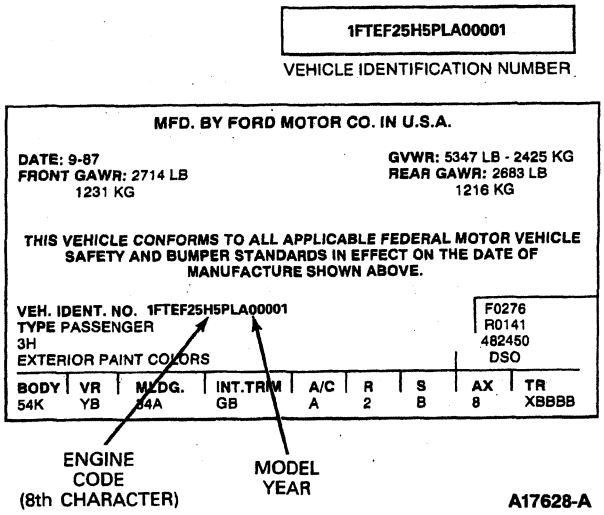

Emission Calibration Number Label

The emission calibration number label is located on the left side door or left door post pillar. It identifies the engine calibration number, the engine code number and revision level.

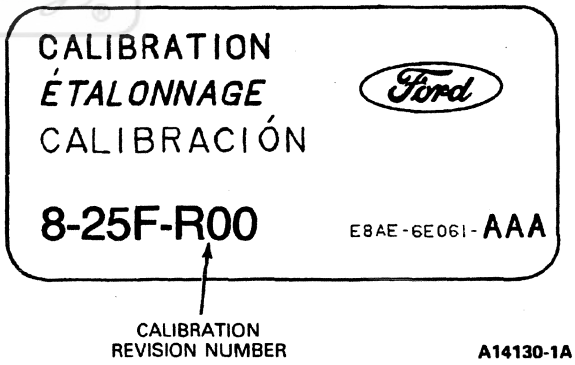

Safety Certification Decal

For quick engine (6007) identification, refer to the Safety Certification Decal. The decal is mounted on the LH front door lock face panel. Find the engine code (letter or number) on the decal, then refer to the engine identification chart to determine the engine type and size. An engine identification label is also attached to the engine. The symbol code on the identification tag identifies each engine for determining parts usage; for instance, engine displacement and model year. Engine decal information is located in Section 03-01A (5.8L MFI), Section 03-01B (7.5L MFI) and Section 03-01C (7.3L diesel).

1 Can be purchased as a separate item.

DESCRIPTION AND OPERATION (Continued)

These numbers are used to determine if parts are unique to specific engines.

Always refer to these labels when replacement parts are required or when checking engine calibrations. Engine parts often differ within a liter (or CID) family. Verification of identification codes will ensure that the proper parts are obtained. The codes contain all pertinent information relating to dates, optional equipment and revisions. The Ford Master Parts Catalog contains a complete listing of the codes and their application.

Exhaust Emission Control System

Operation, troubleshooting and required maintenance of the exhaust emission control devices used on these engines (6007) are covered in the 1996 Powertrain Control/Emissions Diagnosis Manual.[2]

For removal and installation of exhaust emissions components, refer to the following sections in this manual:

- Section 03-08 for engine emission control components
- Section 03-04A, Section 03-04B or Section 03-04C for fuel charging controls components
- Section 03-13 for evaporative emission components
- Section 03-14 for electronic engine controls components

DIAGNOSIS AND TESTING

Engine

Inspection and Verification

1. Verify the vehicle owner's original concern by operating the engine (6007) to duplicate the condition.
2. Inspect to determine if any of the following mechanical concerns apply.

VISUAL INSPECTION CHART

Mechanical
• Engine oil leaks • Damaged and/or severely worn parts • Loose mounting bolts, studs and nuts

3. If the concern(s) remain after the inspection, determine the symptoms and proceed to the following symptom chart.

Ford Motor Company

2 Can be purchased as a separate item.

DIAGNOSIS AND TESTING (Continued)

Symptom Chart

ENGINE DIAGNOSIS

Condition	Possible Source	Action
• Difficult Starting	• Burnt valve. • Worn piston. • Worn piston ring(s). • Worn cylinder. • Damaged cylinder head gasket. • Malfunctioning or damaged fuel system. • Malfunctioning or damaged ignition system.	• REPLACE valve. • REPLACE piston. • REPLACE piston ring(s). • SERVICE or REPLACE cylinder blocks. • REPLACE cylinder head gasket. • REFER to 1996 Powertrain Control/Emissions Diagnosis Manual.[3] • REFER to 1996 Powertrain Control/Emissions Diagnosis Manual.[3]
• Poor Idling	• Intake manifold vacuum leak. • Damaged hydraulic valve tappet. • Damaged hydraulic valve tappet guide. • Improper valve-to-valve seat contact. • Damaged cylinder head gasket. • Malfunctioning or damaged fuel system. • Malfunctioning or damaged ignition system.	• CHECK and REPLACE vacuum lines and caps. • CHECK and REPLACE intake *manifold and upper intake gaskets.* • REPLACE hydraulic valve tappet. • REPLACE hydraulic valve tappet guide. • REPLACE valve and/or valve seat. • REPLACE cylinder head gasket. • REFER to 1996 Powertrain *Control/Emissions* Diagnosis Manual.[3] • REFER to 1996 Powertrain Control/Emissions Diagnosis Manual.[3]
• Abnormal Combustion	• Damaged hydraulic valve tappet. • Damaged hydraulic valve tappet guide. • Burnt or sticking valve. • Weak or broken valve spring. • Carbon accumulation in combustion chamber. • Malfunctioning or damaged fuel system. • Malfunctioning or damaged ignition system.	• REPLACE hydraulic valve tappet. • REPLACE hydraulic valve tappet guide. • SERVICE or REPLACE valve. • REPLACE valve spring. • ELIMINATE carbon buildup. • REFER to 1996 Powertrain Control/Emissions Diagnosis Manual.[3] • REFER to 1996 Powertrain Control/Emissions Diagnosis Manual.[3]
• Excessive Oil Consumption	• Worn piston ring groove. • Sticking piston ring(s). • Worn piston or cylinder. • Worn valve stem seal. • Worn valve stem or valve guide. • Leaking oil.	• REPLACE piston. • SERVICE or REPLACE piston ring(s). • SERVICE and/or REPLACE piston or cylinder block. • REPLACE valve stem seal. • REPLACE valve stem and guide. • SERVICE oil leakage.
• Hard Start/No Start	• Low-pressure oil pump. • High-pressure oil pump. • Oil reservoir empty.	• PERFORM oil pump diagnostics and testing. REFER to Section 03-01C. • PERFORM high-pressure oil pump diagnostics and testing. REFER to 1996 Powertrain Control/Emissions Diagnosis Manual.[3] • SERVICE oil leakage.

Official Licensed Product

3 Can be purchased as a separate item.

DIAGNOSIS AND TESTING (Continued)

ENGINE DIAGNOSIS (Continued)

Condition	Possible Source	Action
• Engine Noise	• Excessive main bearing oil clearance.	• ADJUST clearance or REPLACE main bearing.
	• Seized or heat damaged main bearing.	• REPLACE main bearing.
	• Excessive crankshaft end play.	• ADJUST end play or REPLACE crankshaft.
	• Excessive connecting rod bearing oil clearance.	• ADJUST clearance or REPLACE connecting rod.
	• Heat damaged connecting rod bearing.	• REPLACE connecting rod bearing.
	• Damaged connecting rod bushing.	• REPLACE connecting rod bushing.
	• Worn cylinder.	• SERVICE or REPLACE cylinder block.
	• Worn piston or piston pin.	• REPLACE piston or piston pin.
	• Damaged piston ring(s).	• REPLACE piston ring(s).
	• Bent connecting rod.	• REPLACE connecting rod.
	• Malfunctioning hydraulic valve tappet.	• REPLACE hydraulic valve tappet.
	• Excessive hydraulic valve tappet clearance.	• ADJUST clearance or REPLACE hydraulic valve tappet guide.
	• Broken valve spring.	• REPLACE valve spring.
	• Excessive valve guide clearance.	• SERVICE clearance or REPLACE valve guide / stem.
	• Malfunctioning or damaged cooling system.	• REFER to Section 03-03.
	• Malfunctioning or damaged fuel system.	• REFER to 1996 Powertrain Control / Emissions Diagnosis Manual.[4]
	• Leaking exhaust system.	• SERVICE exhaust leakage.
	• Improper drive belt tension.	• REFER to Section 03-05.
	• Malfunctioning generator bearing.	• REFER to Section 14-02A or Section 14-02B in the Body, Chassis Manual depending on generator.
	• Loose timing chain.	• ADJUST or REPLACE timing chain.
	• Damaged belt tensioner.	• REPLACE timing belt tensioner.
	• Malfunctioning water pump bearing.	• REFER to Section 03-03.
• Insufficient Power	• Malfunctioning hydraulic valve tappet.	• REPLACE hydraulic valve tappet.
	• Damaged hydraulic valve tappet guide.	• REPLACE hydraulic valve tappet guide.
	• Compression leakage at valve seat.	• SERVICE or REPLACE valve, valve seat or cylinder head.
	• Seized valve stem.	• REPLACE valve stem.
	• Weak or broken valve spring.	• REPLACE valve spring.
	• Damaged cylinder head gasket.	• REPLACE cylinder head gasket.
	• Cracked or distorted cylinder head.	• REPLACE cylinder head.
	• Damaged, worn or sticking piston ring(s).	• SERVICE or REPLACE piston ring(s).
	• Worn or damaged piston.	• REPLACE piston.
	• Malfunctioning or damaged fuel system.	• REFER to 1996 Powertrain Control / Emissions Diagnosis Manual.[4]
	• Malfunctioning or damaged ignition system.	• REFER to 1996 Powertrain Control / Emissions Diagnosis Manual.[4]
	• Slipping transmission.	• REFER to Section 07-01 depending on transmission.
	• Dragging brakes.	• REFER to Section 07-01 depending on transmission.
	• Incorrect tire size.	• REFER to Section 07-01 depending on transmission.
	• Damaged or plugged exhaust system.	• CHECK exhaust system.

Official Licensed Product Ford Motor Company

4 Can be purchased as a separate item.

SERVICE PROCEDURES

Positive Crankcase Ventilation (PCV) System, Closed-Type

A malfunctioning closed crankcase ventilation system can be indicated by loping or rough engine idle.

CAUTION: Do not attempt to compensate for this idle condition by disconnecting the crankcase ventilation system and making an air by-pass or idle speed adjustment. The removal of the crankcase ventilation system from the engine (6007) will adversely affect the fuel economy and engine ventilation with resultant shortening of engine life.

To determine whether the loping or rough idle condition is caused by a malfunctioning crankcase ventilation system, refer to the 1996 Powertrain Control / Emissions Diagnosis Manual.[5]

Engine Oil Leaks

NOTE: Due to their remote location, rear engine oil leaks can be very difficult to pinpoint. This area is also very difficult to clean. Eliminate all other possibilities before removing an engine (6007) or transmission (7003) to repair a suspected leak in this area.

When diagnosing engine oil leaks, it is important that the source and location of the leak be positively identified prior to service. There are two methods of diagnosing engine oil leaks. The following procedure has been found to be very effective and requires only a minimum of equipment. Prior to using this procedure, it is important to clean the cylinder blocks (6010), cylinder heads (6049), valve covers (6582), oil pan (6675) and flywheel housing areas with a suitable solvent to remove all traces of oil.

Fluorescent Oil Additive Method

To perform oil leak diagnosis using Rotunda Oil Leak Detector 164-R0756 or equivalent, perform the following procedure.

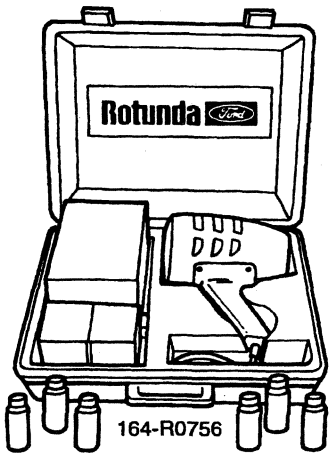

A19016-B

1. Clean engine with a suitable solvent to remove all traces of oil.
2. Drain engine oil crankcase and refill with recommended oil, premixed with Rotunda Gas Engine Oil Dye 164-R3705 or equivalent. Use 29.6 ml (one fluid ounce) of fluorescent additive. If oil is not premixed, fluorescent additive must be added to crankcase first.
3. Run engine for 15 minutes. Stop engine and inspect all seal and gasket areas for leaks using Rotunda Oil Leak Detector Lamp 164-R0756 or equivalent. A clear bright yellow or orange area will identify leak. For extremely small leaks, it can take several hours for the leak to appear.
4. If necessary, pressurize main oil gallery system to locate leaks due to improperly sealed, loose or cocked plugs. If flywheel bolts leak oil, look for sealer on threads.
5. Service all leaks as required.

Pressure Method

As an alternative testing procedure, the crankcase can be pressurized to locate oil leaks. The following materials are required to fabricate the tool:

- air supply and air hose
- air pressure gauge that measures pressure
- air line shutoff valve
- appropriate fittings to attach above parts to oil fill, PCV grommet holes and PCV fresh air hose
- appropriate plugs to seal any openings leading to crankcase
- a solution of liquid detergent and water to be applied with a suitable type applicator such as a squirt bottle or brush

Fabricate the air supply hose to include the air line shutoff valve and the appropriate adapter to permit the air to enter the engine through the rocker arm cover tube. Fabricate the air pressure gauge to a suitable adapter for installation on the engine at the oil fill opening.

Testing Procedure

1. **CAUTION: Use extreme caution when pressurizing crankcase. Applying air pressure above specified pressure risks damage to seals, gaskets and core plugs. Pressure must not be allowed to exceed 27 kPa (4 psi) under any circumstances.**

   Open air supply valve until pressure gauge maintains 20 kPa (3 psi).
2. Inspect sealed and gasketed areas for leaks by applying a solution of liquid detergent and water over areas for formation of bubbles, which indicates leakage.

Leakage Points

Examine the following areas for oil leakage.

5 Can be purchased as a separate item.

SERVICE PROCEDURES (Continued)

Underhood

- high pressure oil pump 7.3L
- valve cover gaskets (6584)
- oil reservoir 7.3L
- intake manifold gaskets (9439)
- oil pressure regulator 7.3L
- head gaskets (6051)
- oil bypass filter (6714)
- distributor O-ring
- oil level indicator (dipstick) tube connection
- oil pressure sensor (9278)
- cup plugs and / or pipe plugs at end of oil passages

Under Engine, with Vehicle on Hoist

- oil pan gasket (6710)
- oil pan front and rear end seals
- crankshaft front seal (6700)
- oil cooler (6A642)
- crankshaft rear oil seal (6701)
- engine damper keyway (damper to damper bolt / washer interface)

With Transmission and Flywheel Removed

NOTE: Oil leaks at crimped seams in sheet metal parts and cracks in cast or stamped parts can be detected when pressurizing the crankcase.

NOTE: Light foaming equally around rocker arm cover bolts and crankshaft seals is not detrimental and corrections are not required in such cases.

NOTE: Air leakage in area around a crankshaft rear oil seal does not necessarily indicate a rear seal leak. However, if no other cause can be found for oil leakage, it can be assumed that the crankshaft rear oil seal is the cause of the oil leakage.

- crankshaft front seal
- rear main bearing cap parting line
- rear main bearing cap and seals
- flywheel mounting bolt holes
- rear cup plugs and / or pipe plugs at the end of oil passages
- upper left-hand transmission to cylinder block bolt (7.5L only)

Compression Test

Compression Gauge Check

1. Make sure oil in crankcase is of the correct viscosity and at proper level, and battery (10655) is properly charged. Operate vehicle until engine (6007) is at normal operating temperature. Key off, then remove all spark plugs (12405).
2. Set throttle plates in wide-open position.
3. Install a compression gauge such as Rotunda Compression Tester 014-00707 or equivalent in No. 1 cylinder spark plug opening.
4. Install an auxiliary starter switch in starting circuit. With key off, and using auxiliary starter switch, crank engine at least five compression strokes and record highest reading. Note the approximate number of compression strokes required to obtain the highest reading.
5. Repeat test on each cylinder, cranking the engine approximately the same number of compression strokes.

Test Results

The indicated compression pressures are considered within specification if the lowest reading cylinder is within 75 percent of the highest. Refer to the following chart.

COMPRESSION PRESSURE LIMIT CHART

Maximum kPa	Maximum psi	Minimum kPa	Minimum psi
924	134	696	101
938	136	703	102
952	138	717	104
965	140	724	105
979	142	738	107
993	144	745	108
1007	146	758	110
1020	148	765	111
1034	150	779	113
1048	152	786	114
1062	154	793	115
1076	156	807	117
1089	158	814	118
1103	160	827	120
1117	162	834	121
1131	164	848	123
1145	166	855	124
1158	168	869	126
1172	170	876	127
1186	172	889	129
1200	174	903	131
1214	176	910	132
1227	178	917	133
1241	180	931	135
1255	182	938	136
1268	184	952	138
1282	186	965	140
1296	188	972	141
1310	190	979	142
1324	192	993	144

(Continued)

Official Licensed Product

SERVICE PROCEDURES (Continued)

COMPRESSION PRESSURE LIMIT CHART (Cont'd)

Maximum kPa	Maximum psi	Minimum kPa	Minimum psi
1338	194	1000	145
1351	196	1014	147
1365	198	1020	148
1379	200	1034	150
1393	202	1041	151
1407	204	1055	153
1420	206	1062	154
1434	208	1076	156
1448	210	1083	157
1462	212	1089	158
1476	214	1103	160
1489	216	1117	162
1503	218	1124	163
1517	220	1138	165
1531	222	1145	166
1544	224	1158	168
1558	226	1165	169
1572	228	1179	171
1586	230	1186	172
1600	232	1200	174
1613	234	1207	175
1627	236	1220	177
1641	238	1227	178
1655	240	1241	180
1669	242	1248	181
1682	244	1262	183
1696	246	1269	184
1710	248	1283	186
1724	250	1289	187

Compression Readings Interpreting — Gasoline Engines

It is recommended the Compression Pressure Limit Chart be used when checking cylinder compression so that the lowest reading number is 75 percent of the highest reading.

If one or more cylinders reads low, squirt approximately one 1.5 ml (1 tablespoon) of SAE 50 weight or equivalent engine oil on top of the pistons in the low reading cylinders. Repeat compression pressure check on these cylinders.

1. If compression improves considerably, piston rings are at fault.
2. If compression does not improve, valves are sticking or seating poorly.
3. If two adjacent cylinders indicate low compression pressures and squirting oil on pistons does not increase compression, cause could be a cylinder head gasket leak between cylinders. Engine oil or coolant in cylinders can result from this problem.

Example Readings

For example, check the compression pressures in all cylinders. If the highest reading obtained was 1351 kPa (196 psi) and the lowest pressure reading was 1069 kPa (155 psi), the engine is within specification and the compression is considered satisfactory.

NOTE: For the 7.3L DIT diesel engine, perform a crankcase pressure test instead of a compression test. Refer to Pressure Method under Engine Oil Leaks in the Service Procedures portion of this section.

Cylinder Leakage Detector

When a cylinder produces a low reading, the use of Rotunda Pressurization Kit 014-00705 or equivalent will be helpful in pinpointing the exact cause.

The leakage detector is inserted in the spark plug hole, the piston is brought up to top dead center on the compression stroke, and compressed air is admitted.

Once the combustion chamber is pressurized, a special gauge will read the percentage of leakage. Leakage exceeding 20 percent is considered excessive.

While the air pressure is retained in the cylinder, listen for the hiss of escaping air. A leak by the intake valve (6507) will be audible in the throttle body (9E926). A leak by the exhaust valve (6505) can be heard at the tail pipe. Leakage past the rings will be audible at the positive crankcase ventilation (PCV) connection. If air is passing through a blown gasket to an adjacent cylinder, the noise will be evident at the spark plug hole of the cylinder into which the air is leaking. Cracks in the cylinder blocks (6010), or gasket leakage into the cooling system can be detected by a stream of bubbles in the radiator (8005).

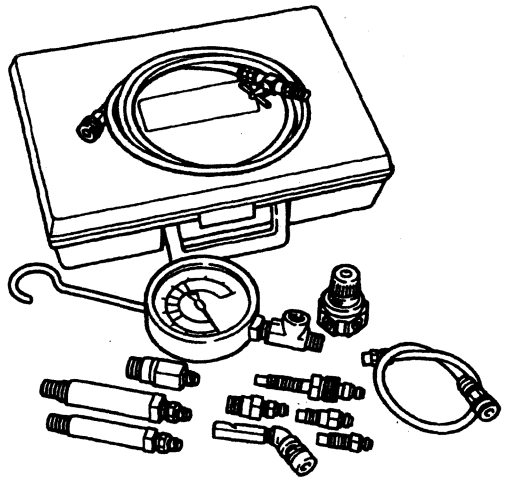

ROTUNDA PRESSURIZATION KIT 014-00705 **A23452-A**

SERVICE PROCEDURES (Continued)

Oil Leak and Valve Guide Seal Test

The cylinder leakage detector can be used to test for engine oil leaks and to check the valve seals for leakage.

1. Plug all crankcase openings except the one used for connecting the leakage detector.
2. **CAUTION: Use extreme caution when pressurizing crankcase. Applying air pressure above specified pressure risks damage to seals, gaskets and core plugs. Pressure must not be allowed to exceed 27 kPa (4 psi) under any circumstances.**

   Connect the detector to a crankcase opening (oil level indicator tube (6754) is convenient) and adjust the air pressure to approximately 20 kPa (3 psi).
3. Using a solution of liquid soap and water, brush the solution along the gasket sealing surfaces and bearing seals. Look for bubbles or foam.
4. Remove the spark plugs (12405) and rotate the engine (6007) slowly with a wrench. Check for large amounts of air escaping into the cylinders as each intake and exhaust valve opens.

   The spark plugs on the leaking cylinders will probably show deposits of burned oil.

Intake Manifold Vacuum Test

Bring the engine (6007) to normal operating temperature. Connect Rotunda Vacuum/Pressure Tester 164-R0253 or equivalent to the intake manifold (9424). Run the engine at the specified idle speed.

The vacuum gauge should read between -51 and -74 kPa (15 and 22 in-Hg) depending upon the engine condition and the altitude at which the test is performed. SUBTRACT 5.5 kPa FOR EVERY 500 METERS ABOVE SEA LEVEL. SUBTRACT ONE INCH FROM THE SPECIFIED READING FOR EVERY 1,000 FEET OF ELEVATION ABOVE SEA LEVEL.

The reading should be quite steady. It might be necessary to adjust the gauge damper control (where used) if the needle is fluttering rapidly. Adjust damper until needle moves easily without excessive flutter.

Vacuum Gauge Readings, Interpretation

A careful study of the vacuum gauge reading while the engine is idling will help pinpoint trouble areas. Always conduct other appropriate tests before arriving at a final diagnostic decision. Remember that vacuum gauge readings must be interpreted with care.

Most vacuum gauges have a "normal" band indicated on the gauge face.

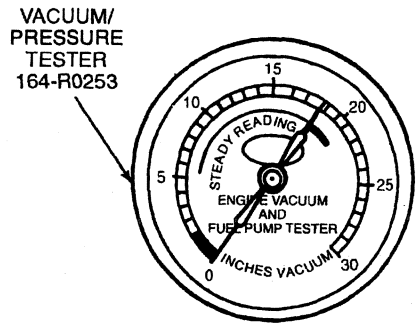

A23453-B

Following are potential gauge readings. Some should be considered normal; others must be investigated further.

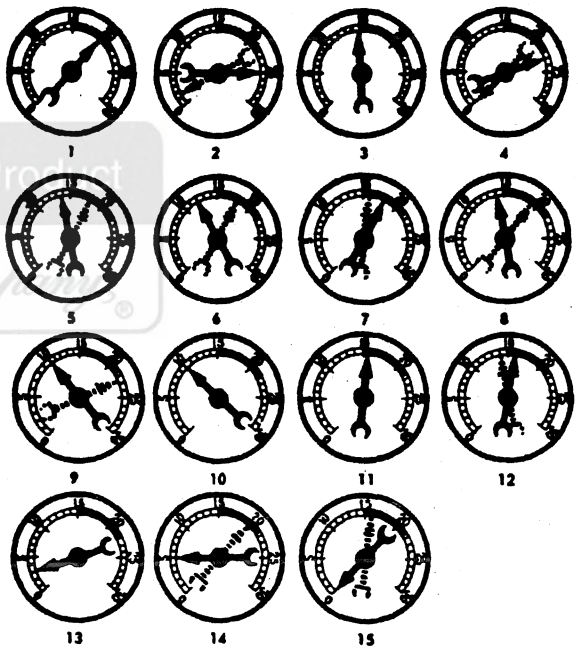

A10428-A

1. NORMAL READING: Needle between -51 and -74 kPa (15 and 22 in-Hg) and holding steady.
2. NORMAL READING DURING RAPID ACCELERATION AND DECELERATION: When engine is rapidly accelerated (dotted needle), needle will drop to a low (not to zero) reading. When throttle is suddenly released, the needle will snap back up to a higher than normal figure.
3. NORMAL FOR HIGH LIFT CAM WITH LARGE OVERLAP: Needle will register as low as -51 kPa (15 in-Hg) but will be relatively steady. Some oscillation is normal.
4. WORN RINGS OR DILUTED OIL: When engine is accelerated (dotted needle), needle drops to 0 kPa (zero in-Hg). Upon deceleration, needle runs slightly above 74 kPa (4 in-Hg).

Licensed Product
Ford Motor Company

SERVICE PROCEDURES (Continued)

5. STICKING VALVE(S): When the needle (dotted) remains steady at a normal vacuum but occasionally flicks (sharp, fast movement) down and back about 13 kPa (4 in-Hg), one or more valves may be sticking.
6. BURNED OR WARPED VALVES: A regular, evenly spaced, downscale flicking of the needle indicates one or more burned or warped valves. Insufficient hydraulic lash adjuster clearance will also cause this action.
7. POOR VALVE SEATING: A small but regular downscale flicking can mean one or more valves are not seating.
8. WORN VALVE GUIDES: When the needle oscillates (swings back and forth) over a 13 kPa (4 in-Hg) range at idle speed, the valve guides (6510) could be worn. As engine speed is increased, the needle will become steady if the guides are responsible.
9. WEAK VALVE SPRINGS: When the needle oscillation becomes more violent as engine rpm is increased, weak valve springs (6513) are indicated. The reading at idle could be relatively steady.
10. LATE VALVE TIMING: A steady but low reading can be caused by late valve timing.
11. IGNITION TIMING RETARDING: Retarded ignition timing will produce a steady but low reading.
12. INSUFFICIENT SPARK PLUG GAP: When spark plugs (12405) are gapped too close, a regular, small pulsation of the needle can occur.
13. INTAKE LEAK: A low, steady reading can be caused by an intake manifold or throttle body gasket (TB gasket)(9E936) leak.
14. BLOWN HEAD GASKET: A regular drop of approximately 33-50 kPa (10-15 in-Hg) can be caused by a blown head gasket (6051) or warped head-to-block mounting surface.
15. RESTRICTED EXHAUST SYSTEM: When the engine is first started and is idled, the reading might be normal. As the engine rpm is increased, the back-pressure caused by a clogged muffler, kinked tail pipe, etc., will cause the needle to slowly drop to zero. The needle then may slowly rise. Excessive exhaust clogging will cause the needle to drop to a low point even if the engine is only idled.

When vacuum leaks are indicated, search out and correct the condition. Excess air leaking into the system will upset the fuel mixture and cause conditions such as rough idle, missing on acceleration, or burned valves. If the leak exists in an accessory unit, such as the power brake, the unit will not function correctly. Always service vacuum leaks.

Engine Oil Consumption, Excessive

The amount of oil an engine (6007) uses will vary with the way the vehicle is driven in addition to normal engine-to-engine variation.

Oil usage is normally greater during the first 16,000 km (10,000 miles) of service. As mileage increases, oil usage generally improves. Cars and light trucks in normal service should get at least 1448 km (900 miles) to 0.9 l (1 qt) after 16,000 km (10,000 miles) of service.

Vehicles used in heavy-duty operation (severe service) may result in greater oil usage. The following are examples of heavy-duty operation:

- high ambient temperatures
- trailer towing applications
- taxi cab applications
- police service applications
- severe loading applications
- sustained high-speed operation

Engines need oil to lubricate the following internal components:

- engine block cylinder walls
- pistons and piston rings
- intake and exhaust valve stems
- intake and exhaust valve guides
- all internal engine components

When the pistons move downward, a thin film of oil is left on the cylinder walls. The thin film of oil is burned away on the firing stroke during combustion. If an engine burned a drop of oil during each firing stroke, oil consumption would be about one quart for every mile traveled. Fortunately modern engines use much less oil than this example. However, even efficient engines will use some oil or they would quickly wear out. Additionally, as the vehicle is operated, some oil is drawn into the combustion chambers past the intake and exhaust valve stem seals and burned.

Many different conditions can affect oil consumption rates. A partial list of those conditions includes:

- operator driving habits
- ambient temperature
- quality and viscosity of the oil
- vehicle load and driving terrain

Operation under certain conditions can create a false impression of excessive oil consumption. Most commonly, this happens when the vehicle has been operated for repeated short trips at low ambient temperatures. Under these conditions, substantial amounts of condensed water and fuel can build up in the oil. If the vehicle is then run for a significant time at highway speeds or with heavy loads, much of the accumulated water and fuel can be removed by the engine ventilation system. Removing the water and fuel in a relatively short time will often create the appearance of an excessive consumption rate of the customer. In this situation, the customer can be assured that these events are normal for the conditions noted. The customer can also be advised to change oil and filter more frequently, especially prior to starting a long trip in cold weather if unduly concerned about this condition.

SERVICE PROCEDURES (Continued)

Make sure the selected engine oil meets the recommended API performance category SG and SAE viscosity grade as shown in the vehicle owner guide. It is also important that the engine oil is changed at the intervals specified for the typical operating conditions.

Oil Consumption Test

Use the following procedure to find the source of excessive internal oil consumption.

NOTE: For 7.3L DIT diagnostics, refer to the 1996 Powertrain Control / Emissions Diagnosis Manual.[6]

1. Determine what the customer considers excessive oil consumption to be. Note vehicle mileage and the following observations:
   a. How many miles are typically driven per quart of oil used?
   b. How is the vehicle being used (e.g., sustained high speed operation, heavy loads, trailer towing, high ambient temperature, etc.)?
   c. What does the customer expect normal oil consumption to be?
2. Verify that the engine has no external oil leak. Refer to Engine Oil Leaks in the Service Procedures portion of this section.
3. Verify that the engine has the proper oil level dipstick (6750) by comparing the part number stamped on it against the Ford Master Parts Catalog. Verify that the oil level dipstick and oil level indicator tube (6754) are unmodified and in good condition. Verify that the oil level indicator tube is properly seated in the block or oil pan, and the dipstick seats properly in the oil level indicator tube.
4. Verify that the engine is not being run in an overfilled condition. Check the oil level at least five minutes after a hot shutdown with the vehicle parked in a level area. Under no circumstances should the oil level be above the letter F in the word FULL. If a significant overfill is indicated, perform Steps 5a through 5d to verify the dipstick calibration. If the dipstick calibration checks OK, instruct the customer to avoid overfilling the engine and return the vehicle to service. To verify the vehicle's actual oil consumption, perform Steps 5e and 5f only after the oil level dipstick has been calibrated.

A17629-E

5. Perform engine oil consumption test as follows:
   a. Drain engine oil. Remove and replace oil filter. Using 0.9 l (1 quart) less than recommended, refill crankcase with recommended quality of oil.
   b. Run the engine for three minutes (ten minutes if cold), then turn engine off. Allow oil to drain into the oil pan for an additional five minutes (vehicle should be on level ground).
   c. Remove oil dipstick and wipe clean. Do not wipe with anything contaminated with silicone compounds. Reinstall dipstick, being sure to seat the dipstick firmly in the oil level indicator tube. Remove the dipstick and scribe a mark on the back (unmarked) surface at the indicated oil level. This should be about the same level as the ADD mark on the face of the dipstick.
   d. Add 0.9 l (1 quart) of oil. Restart the engine and allow it to idle for at least two minutes. Shut down and allow oil to drain back for at least five minutes. Mark the dipstick using the procedure above. This level can range from slightly below the top of the crosshatched area to slightly below the letter F in FULL.
   e. Instruct the customer to drive the vehicle as usual and perform the following steps:
      - Check the oil level regularly at intervals of 161 to 241 km (100 to 150 miles).
      - Return to the service facility when the oil level drops below the lower (ADD) mark scribed on the dipstick by the technician.
      - In an emergency, add only full liters (quarts) of the same oil and note the mileage at which the oil was added.
   f. Check the oil level under the same conditions as in Steps 5c and 5d, reading the back of the oil level dipstick where the scribe marks are located.
      - Measure the distance from the oil level to the upper scribe mark on the oil level dipstick and record.
      - Measure the distance between the two scribe marks and record.
      - Divide the first measurement by the second. Add one to this total for every quart added by the customer as instructed in Step 5e.
      - Divide the distance driven during the oil test by the result. This quantity is the approximate oil consumption rate in miles per quart (MPQ).
   g. If the calculated oil consumption rate is unacceptable, proceed to Step 6.
6. Check PCV valve system. Make sure system is not plugged.
7. Check for plugged oil drain-back holes in cylinder heads (6049) and cylinder blocks (6010).

6 Can be purchased as a separate item.

SERVICE PROCEDURES (Continued)

8. If condition still exists, perform a cylinder compression test on gasoline engines, or a crankcase pressure test on diesel engines. Refer to Pressure Method under Engine Oil Leaks in the Service Procedures portion of this section, or perform a cylinder leak detection test with Rotunda Pressurization Kit 014-00705 or equivalent. This can be helpful in determining source of oil consumption, i.e., valves, piston rings, etc.
9. Check valve guides (6510) for excessive guide clearance. Replace all valve stem / guide seals after correct valve guide clearance has been verified.
10. NOTE: After checking for worn parts, if it is determined parts should be replaced, make sure correct replacement parts are used.

    Worn or damaged internal engine components can cause excessive oil consumption. Small deposits of oil on tip of spark plugs (12405) can be a clue to internal oil consumption. If internal oil consumption still persists, proceed as follows:

    a. Remove engine from vehicle and place it on an engine work stand. Remove intake manifold(s), cylinder heads, oil pan (6675) and oil pump (6600). Refer to Section 03-01A (5.8L MFI), Section 03-01B (7.5L MFI) or Section 03-01C (7.3L diesel).

    b. Check piston ring clearance, ring gap and ring orientation. Service as required.

    c. Check for excessive bearing clearance as outlined in this section. Service as required.
11. Perform Step 5 again to confirm oil consumption concern has been resolved.

Oil Pressure Test

SPECIAL SERVICE TOOL(S) REQUIRED

Description	Tool Number
Engine Oil Pressure Gauge	T73L-6600-A

1. Disconnect and remove the oil pressure sensor (9278) from the engine.
2. Connect an Engine Oil Pressure Gauge T73L-6600-A and Transmission Test Adapter D87C-77000-A or equivalent to the oil pressure sender screw port.
3. Run the engine until normal operating temperature is reached.
4. Run the engine at 3,000 rpm and record the gauge reading.
5. The oil pressure should be 392-490 kPa (57-71 psi) at 3,000 rpm.
6. If the pressure is not within specification, check the following possible sources:
   - insufficient oil
   - oil leakage
   - worn or damaged oil pump
   - clogged oil pump screen cover and tube (6622)
   - excessive main bearing clearance
   - excessive connecting rod bearing clearance

Valve Train Analysis, Static (Engine Off)

Rocker Arm Cover Removed

NOTE: Static valve train analysis, with the engine (6007) off, is to be performed before dynamic valve train analysis, which is performed with the engine running.

NOTE: Remove valve cover (6582). Section 03-01A (5.8L MFI), Section 03-01B (7.5L MFI) or Section 03-01C (7.3L diesel).

Check for damaged and severely worn parts, correct assembly, and use of correct parts by proceeding with the static engine analysis.

Rocker Arm

- Check for loose mounting bolts, studs and nuts.
- Check for plugged oil feed in the rocker arm (6564) or cylinder head (6049).

Push Rods

- Check for bent push rods (6565) and restriction in oil passage.

Valve Springs

- Check for broken or damaged parts.

Valve Spring Retainer and Valve Spring Retainer Keys

- Check for proper seating of valve spring retainer keys (6518) on valve stem and in valve spring retainer (6514).

Valves and Cylinder Head

- Check for signs of improper cylinder head gasket installation such as the shape of the cylinder head and block, and the shape of the head gasket (6051) not matching.
- Check for signs of cylinder head gasket leakage such as coolant or oil leaking between cylinder block and cylinder head.
- Check for plugged oil drainback holes.
- Check for worn or damaged valve tips.
- Check for missing or damaged intake and exhaust valve seals.
- Check valve clearance. Refer to Section 03-01A (5.8L MFI), Section 03-01B (7.5L MFI) or Section 03-01C (7.3L diesel).
- Check installed spring height.
- Check for missing or worn valve spring seats, if so equipped.

SERVICE PROCEDURES (Continued)

Valve Train Analysis, Dynamic

NOTE: Static valve train analysis, with the engine (6007) off, is to be performed before dynamic valve train analysis, which is performed with the engine running.

Start the engine and, while running at idle, check for proper operation of all parts. Check the following.

Rocker Arm

- Check for plugged oil feed in rocker arm (6564) or cylinder head (6049).
- Also inspect for proper overhead valve train lubrication and examine for plugged oil feed in rocker arm.

If a condition of insufficient lubrication is suspected, accelerate the engine to 1100 to 1300 rpm with the transmission in NEUTRAL and the engine at normal operating temperature. Oil should flow from the rocker arm oil holes so that valve tips and rocker arms are well lubricated. If lubrication is insufficient for this condition to occur, check oil passages for blockage.

Push Rods

- Check for bent push rods and restriction in oil passage.
- Check for proper rotation of push rod (non-roller tappets).

Valves and Cylinder Head

- Check for plugged oil drainback holes.
- Check for missing or damaged valve stem oil seals or guide-mounted oil seals.

WARNING: AVOID GETTING OIL ON HOT EXHAUST MANIFOLDS.

If a condition of insufficient lubrication is suspected, check oil passages for blockage, then accelerate the engine to 1200 rpm with the transmission in NEUTRAL and the engine at normal operating temperature. Oil should spurt from the rocker arm oil holes so that valve tips and rocker arms are well lubricated.

Camshaft Lobe Lift

This procedure is for checking lift with the camshaft (6250) installed. For checking with camshaft removed, refer to Camshaft Journals, Cam Lobe Lift in the Service Procedures portion of this section.

Check the lift of each lobe in consecutive order and make a note of the readings.

1. Remove valve cover (6582). Refer to Section 03-01A (5.8L MFI), Section 03-01B (7.5L MFI) or Section 03-01C (7.3L diesel).
2. Remove rocker arm fulcrum bolts, rocker arm seat (6A528) and rocker arm (6564).
3. Make sure valve tappet (6500) is seated against cam. Install Dial Indicator with Bracketry TOOL-4201-C and Cup Shaped Adapter TOOL-6565-AB or equivalents so that ball socket adapter of indicator is on top of valve tappet or push rod and in same plane as valve tappet or push rod movement.

Typical Engine with Push Rods

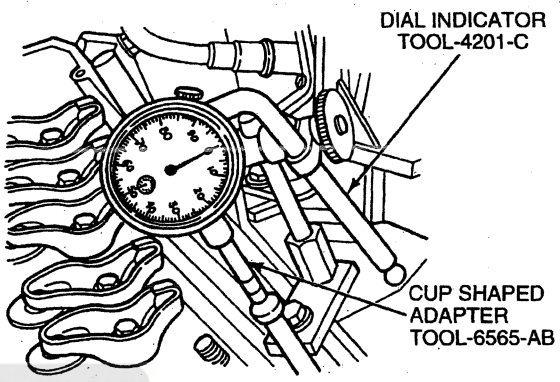

A21124-C

4. Remove spark plug (12405).
5. NOTE: If checking during engine assembly, turn crankshaft using a socket or ratchet.

   Connect an auxiliary starter switch in starting circuit. Crank engine with key off. Bump crankshaft (6303) over until valve tappet is on base circle of camshaft lobe. At this point, valve tappet will be in its lowest position. If checking during engine assembly, turn crankshaft using a socket or ratchet.
6. Zero dial indicator. Continue to rotate crankshaft slowly until valve tappet is in fully raised position (highest indicator reading).
7. Compare total lift recorded on indicator with specifications.
8. NOTE: If lift of any lobe is below specified service limits, camshaft and valve tappets operating on worn lobe(s) must be replaced, as well as any valve tappet with pitting or contact face worn flat or concave. Refer to Hydraulic Valve Tappets in the Service Procedures portion of this section.

   To check accuracy of original indicator reading, continue to rotate crankshaft until valve tappet is once again riding on base circle of camshaft lobe, and read indicator. If indicator does not read zero, repeat Steps 6 through 8.
9. Remove dial indicator and auxiliary starter switch.

Official Licensed Product
Ford Motor Company

SERVICE PROCEDURES (Continued)

10. **CAUTION: After installing rocker arms, do not rotate crankshaft until valve tappets have had sufficient time to bleed down. To do otherwise can cause serious valve damage. Manually bleeding down will reduce waiting time.**

    Install valve cover.

11. Install spark plugs.

Hydraulic Valve Tappet

Hydraulic tappet noise may be caused by any of the following conditions:

- excessive collapsed tappet gap
- sticking tappet plunger
- tappet check valve not functioning properly
- air in lubrication system
- leak-down rate too rapid
- excessive valve guide wear

Excessive collapsed tappet gap can be caused by loose rocker arm fulcrum bolts or nuts, incorrect initial adjustment, wear of tappet face, push rod, rocker arm, rocker arm seat or valve tip. With valve tappet collapsed, check gap between valve tip and rocker to determine if any other valve train parts are damaged, worn or out of adjustment. Replace any worn or damaged parts.

A sticking tappet plunger can be caused by dirt, chips or varnish inside the tappet. This condition can be corrected by disassembling the valve tappet and removing the dirt, chips or varnish that are causing the condition.

A nonfunctioning tappet check valve can be caused by an obstruction (such as dirt or chips) preventing it from closing when the cam lobe is lifting the valve tappet. It can also be caused by a broken check valve spring (6513).

Air bubbles in the lubrication system will prevent the valve tappet from supporting the valve spring load and can be caused by too high or too low an oil level in the oil pan, or by air being drawn into the system through a hole, crack or leaking oil pump inlet tube gasket (6626) on the oil pump screen cover and tube (6622).

If the leak-down time is below the specified time for used valve tappets, noisy operation can result. If no other cause for noisy valve tappets can be found, check the leak-down rate and replace any outside the specification.

Assembled valve tappets can be tested with Hydraulic Tappet Leak-Down Tester to check the leak-down rate. The leak-down rate specification is the time in seconds for the plunger to move a specified distance of its travel while under a 22.7 kg (50 lb) load. Test the valve tappets as described in the following camshaft end play procedure.

Camshaft End Play

1. **CAUTION: Prying against the camshaft gear with the valve train load on the camshaft can break or damage the gear. Therefore, the rocker arm adjusting nuts must be backed off, or the rocker arm and shaft assembly must be loosened sufficiently to free the camshaft. After checking the camshaft end play, resecure valve train components following steps in the specific engine section.**

   NOTE: For Camshaft End Play Specifications, refer to Specifications at end of Section 03-01A (5.8L MFI), Section 03-01B (7.5L MFI), or Section 03-01C (7.3L diesel).

   Push camshaft toward rear of engine (6007). Install Dial Indicator with Bracketry TOOL-4201-C or equivalent so indicator point is on camshaft sprocket attaching bolt.

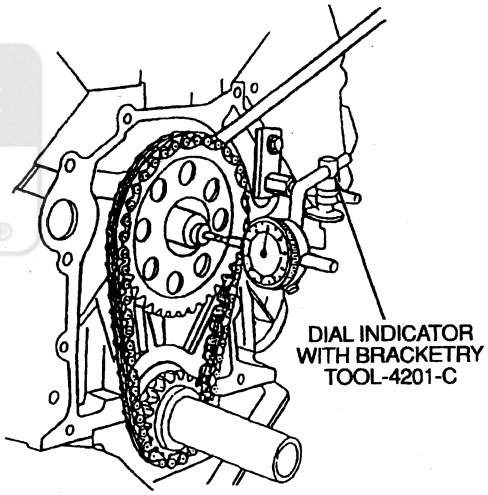

A23675-A

2. Zero dial indicator. Pull camshaft forward and release it. Compare dial indicator reading with specifications. If end play is excessive, replace camshaft thrust plate.
3. Remove dial indicator.
4. After replacing thrust plate, check end play again. If it is still out of specified range, inspect camshaft and cylinder blocks (6010) for excessive wear.

Timing Chain Deflection (5.8L and 7.5L)

1. Remove engine front cover (6019). Refer to Section 03-01A (5.8L MFI) or Section 03-01B (7.5L MFI).
2. Rotate the crankshaft (6303) so the camshaft sprocket and crankshaft sprocket timing marks line up.

SERVICE PROCEDURES (Continued)

3. Mark the top link(s) of the timing chain.
4. Have an assistant hold crankshaft with a suitable tool so it cannot turn.
5. Place a machinists scale above the timing chain so you can measure its movement.
6. Put a torque wrench and socket on the camshaft sprocket bolt.
7. Apply a maximum of 20 N·m (15 lb-ft) torque in a clockwise direction.
8. Note location of marked link on scale.
9. Apply a maximum of 20 N·m (15 lb-ft) torque in a counterclockwise direction while measuring the amount the marked link moves.
10. Movement should be less than 3.175 mm (0.12 inch). If movement is excessive, replace timing chain. Refer to Section 03-01A (5.8L MFI) or Section 03-01B (7.5L MFI).

Crankshaft End Play

After a thrust bearing is replaced, it must be aligned as follows. If not replaced, go to Step 5.

1. Seat the bearings by torquing main caps to specification. Refer to Section 03-01A (5.8L MFI), Section 03-01B (7.5L MFI) or Section 03-01C (7.3L diesel) for engine main bearing cap torque specifications.
2. Loosen thrust bearing cap fasteners to relieve clamp load, but do not disengage cap and fasteners.
3. Firmly pound rear of crank forward with a plastic hammer to push thrust flanges forward.
4. Retighten thrust bearing cap fasteners to specifications. Refer to appropriate engine section.
5. Force crankshaft to rear of engine (6007).
6. Install Dial Indicator with Bracketry TOOL-4201-C or equivalent so contact point rests against crankshaft flange and indicator axis is parallel to crankshaft axis.

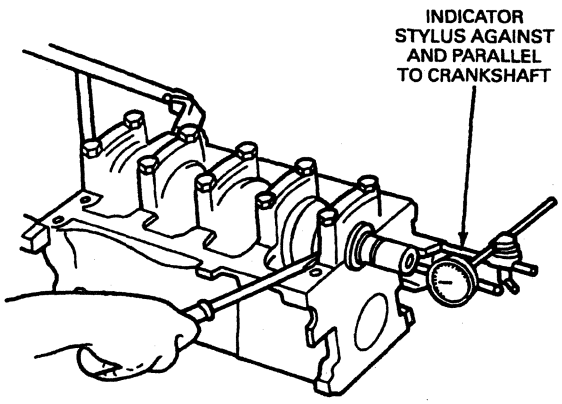

A21123-A

7. Zero dial indicator. Push crankshaft (6303) forward and note reading on dial.
8. If the end play exceeds the wear limit listed in the specific engine section, replace the thrust bearing. Inspect the crankshaft for damage to the thrust face before installing the new bearing. If the end play is less than the minimum limit, inspect the thrust bearing faces for scratches, burrs, nicks, or dirt. If the thrust faces are not damaged or dirty, they probably were not aligned properly. Lubricate and install the thrust bearing and align the faces. Refer to the appropriate engine section. Check the crankshaft end play.

Connecting Rod Side Clearance

1. Install Rotunda Dial Indicator with Bracketry TOOL-4201-C or equivalent so that the contact point rests against the connecting rod cap.
2. Pull cap toward front of engine (6007) and zero the dial indicator.
3. Push cap toward rear of engine and observe amount of side clearance on dial indicator.
4. If side clearance exceeds specification, replace connecting rod and cap.

   If side clearance is less than specification, remove rod and cap and inspect for scratches, burrs, nicks or dirt between crankshaft (6303) and connecting rod.

Flywheel Runout, Manual Transmission

1. Remove spark plugs (12405).
2. Install Dial Indicator with Bracketry TOOL-4201-C or equivalent so indicator points rest on face of the flywheel (6375).

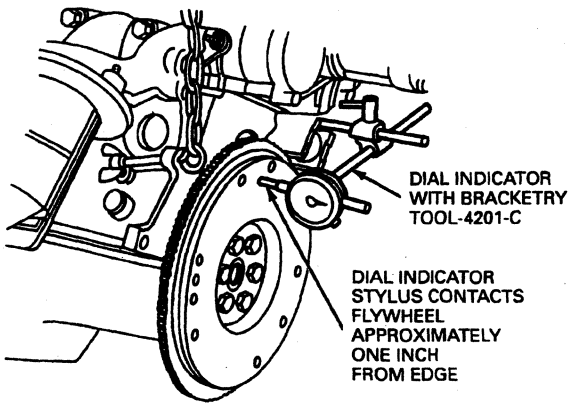

A21125-A

SERVICE PROCEDURES (Continued)

3. NOTE: Refer to the Specifications portion of the appropriate engine section in this group for flywheel runout specifications.

   Hold flywheel and crankshaft (6303) forward or backward as far as possible to prevent crankshaft end play from being indicated as flywheel runout.
4. Set indicator dial on zero mark. Turn flywheel one complete revolution while observing total indicator reading (TIR). If TIR exceeds specification, flywheel and ring gear assembly must be replaced.
5. If clutch face runout exceeds specification, remove flywheel and check for burrs between flywheel and face of crankshaft mounting flange. If no burrs exist, check runout of crankshaft mounting flange. Replace flywheel or machine crankshaft flywheel mounting face sufficiently to true-up the surface.

Service Limit Specifications

Service limit specifications are intended to be a guide only, to be used when overhauling or reconditioning an engine (6007) or engine component. Determine whether a component is suitable for continued service or should be replaced for extended service while the engine is disassembled.

Ford Licensed Product
Ford Motor Company

Cylinder Block

Cleaning and Inspection

If the engine (6007) has been removed and disassembled, remove all core plugs and pipe plugs. Clean the cylinder blocks (6010) using solvent, preferably in a hot tank. Follow all safety and environmental precautions with regards to the solvents. Make sure all oil and dirt is cleaned from the cylinder blocks.

Make sure all oil passageways are clean. A rifle-cleaning brush is useful for this purpose.

Use a long, thin screwdriver to scrape the bottom of the water jackets through the openings in the top deck to make sure all scale and deposits are removed. Most engines have a "dead spot" at the back of the block where the coolant has to make a U-turn and drops any deposits. If the water jackets are not thoroughly cleaned, overheating will result.

Cylinder Block Distortion

Cylinder block distortion is rare because cylinder blocks are normalized after casting, but before machining, to relieve internal stresses from the casting process.

The most probable cause of cylinder block distortion is extreme overheating, which would probably be accompanied by other damage, such as scored bearings or cylinder walls, warped cylinder heads (6049), and possible cylinder block cracks.

Cylinder Head Deck Flatness

1. Place a straightedge across the cylinder head deck in the six positions shown and measure any gaps between the straightedge and the deck with a feeler gauge. The deck should be flat within 0.076 mm (0.003 inch) over 152 mm (6 inches) and 0.152 mm (0.006 inch) overall.
2. Resurface or replace cylinder blocks if necessary.

Main Bearing Bore Alignment

Main bearing bore misalignment can be suspected in cases of premature bearing wear if one bearing wears considerably more than the others or bearings wear cone-shaped.

If bearing misalignment is suspected, perform the following steps.

1. Acquire a gauge bar the same diameter as the crankshaft journals and straight within 0.076 mm (0.003 inch).
2. Put a thin coating of Prussian Blue or similar dye on gauge bar.
3. Insert good bearings in block.
4. Insert gauge bar in bearings and rotate one turn.
5. Remove gauge bar.
6. NOTE: Bearings are not available with oversize outside diameters to allow line boring.

   Inspect bearings. Blue dye should be deposited evenly on all bearings. If dye appears on only one side or bottom of bearing or not at all, cylinder blocks is distorted and should be replaced.

Flywheel Housing Deck Flatness

A concern with the rear deck of the engine can be indicated by the following:

- Frequent replacement of pilot bearing and transmission input shaft bearing on manual transmissions vehicles. Also hard shifting into high (not overdrive) gear or jumping out of gear.
- Frequent replacement of torque converter seals, input shaft seals or bearings, or pump on an automatic transmission vehicle.

If cylinder block-to-transmission misalignment is suspected, perform the following steps:

1. With crankshaft (6303) installed and engine rear plate (7007) and flywheel (6375) removed, attach Dial Indicator with Bracketry TOOL-4201-C or equivalent to crankshaft. The dial indicator can be mounted by any method that holds the extension bar so it does not sag.
2. Position the dial indicator on the machined flange slightly in from the edge.
3. Zero the dial indicator.
4. Because the shape of the flange is irregular, lift the tip of the dial indicator off of the flange.
5. Rotate the crankshaft to the 12 o'clock position and release the dial indicator tip.
6. Take the reading.

SERVICE PROCEDURES (Continued)

7. Lift the pointer off the flange and rotate the crankshaft so the dial indicator is just on the flange on the right side of the engine.
8. Release the pointer and take the reading. The readings should vary less than 0.076 mm (0.003 in.).
9. Attach Dial Indicator with Bracketry TOOL-4201-C or equivalent to transmission input shaft (7017).
10. Position dial indicator on transmission flange just above and inside of hole for left transmission bolt.
11. Zero dial indicator.
12. Slowly rotate transmission input shaft and take readings from dial indicator at 12 o'clock position and just above right-most transmission-to-engine bolt hole.
13. Reading should not vary more than 0.076 mm (0.003 inch).

Sand Holes or Porous Engine Castings — Service

Porosity or sand hole(s), which will cause oil seepage or leakage, can occur with modern casting processes. A complete inspection of engine and transmission (7003) should be made. If the leak is attributed to the porous condition of the cylinder blocks or sand hole(s), service can be made with Ford Devcon Aluminum Liquid F2 or equivalent meeting Ford specification M3D35-A(E). Do not service cracks with this material. Service with this must be confined to those cast iron engine component surfaces where the inner wall surface is not exposed to engine coolant pressure or oil pressure, for example:

- Cylinder block surfaces extending along the length of the cylinder blocks, upward from the oil pan rail to the cylinder water jacket, but not including machined areas.
- Lower rear face of the cylinder blocks.
- Intake manifold casting. Service is not recommended to the intake manifold exhaust crossover section, since temperatures can exceed the recommended temperature limit of 260°C (500°F).
- Cylinder front cover on engines using cast iron material.
- Cylinder head, along the valve cover gasket surface.

Use the following procedure to service porous areas or sand holes in cast iron.

1. Clean surface to be serviced by grinding or rotary filing to a clean bright metal surface. Chamfer or undercut hole or porosity to a greater depth than rest of cleaned surface. Solid metal must surround hole. Openings larger than 6.35 mm (1/4 inch) should not be serviced using Devcon Aluminum Liquid F2 or equivalent meeting Ford specification M3D35-A(E). Openings in excess of 6.35 mm (1/4 inch) can be drilled, tapped and plugged using common tools. Clean service area thoroughly. Devcon Aluminum Liquid F2 or equivalent meeting Ford specification M3D35-A(E) will not stick to a dirty or oily surface.
2. Mix base and hardener as directed on container. Stir thoroughly until uniform.
3. Apply service mixture with a suitable clean tool (putty knife, wood spoon, etc.) forcing epoxy into hole or porosity.
4. Allow service mixture to harden. This can be accomplished by two methods. Heat-cure with a 250-watt lamp placed 254 mm (10 inches) from serviced surface, or air-dry for 10-12 hours at temperatures above 10°C (50°F).
5. Sand or grind serviced area to blend with general contour of surrounding surface.
6. Paint the surface to match the rest of the cylinder blocks.

Cylinder Walls, Refinishing

Cleaning

If the entire engine (6007) has not been disassembled, clean the individual cylinder bore(s) with a cloth soaked with solvent. Dry with a clean, lint-free cloth.

If the entire engine has been disassembled, refer to Cylinder Block in the Cleaning and Inspection portion of this section.

After any cylinder bore service operation, such as honing or deglazing, clean the bore(s) with soap or detergent and water. Then thoroughly rinse the bore(s) with clean water to remove the soap or detergent, and wipe the bore(s) dry with a clean lint-free cloth. Finally wipe the bore(s) with a clean cloth dipped in XO-10W30-QSP or equivalent motor oil meeting Ford specification ESE-M2C153-E.

Inspection

Before removing the piston:

1. Check the amount of ridge at the top of the bore. A thick ridge is a sign of considerable wear.
2. Look for signs of coolant in the bore, especially rust on the bore surface indicating possible leaking head gasket or a crack in the cylinder bore.
3. Check the top of the piston for possible oversize. If oversize pistons have been installed, the oversize will be stamped in the top of the piston.

After the piston is removed and the bore cleaned:

SERVICE PROCEDURES (Continued)

4. Look for scoring. These are parallel gouges usually on the piston thrust side, that is, at right angles to the piston pin. If scored, the cylinder will have to be refinished.
5. Look for cracks. If unsure about a crack, tiny cracks can be detected by coating the bore with a mixture of 25 percent kerosene and 75 percent light engine oil. Wipe the bore dry and immediately apply a coating of zinc oxide dissolved in wood alcohol. Do not use rubbing alcohol as a substitute. If cracks are present, the coating will become discolored at the damaged area. Replace the cylinder block if it is cracked. Magnafluxing can also be used.
6. Check for cylinder wall glazing. When refinished, the cylinder bore is given a slightly rough finish with a cylinder hone to help seat the new piston rings. This finish is worn away as the rings and cylinder bore mate and the bore becomes glassy smooth. If the engine has been run enough for this to have happened, the cylinder will at least have to be honed to seat the new rings on the piston. New rings must be installed when the piston is removed and reinstalled because piston rings are manufactured with a special finish by the factory to help them wear-in and seat. In seating, the special finish is worn off. Reusing piston rings will result in high oil consumption.

Cylinder Bore

Make sure cylinder bore is clean and dry before measuring.

Using a suitable cylinder bore micrometer, measure the cylinder bore(s) in the X and Y directions (90 degrees apart) at points A, B and C. The X direction is parallel to the piston pin. The Y direction is perpendicular to the piston pin and is the direction of piston thrust.

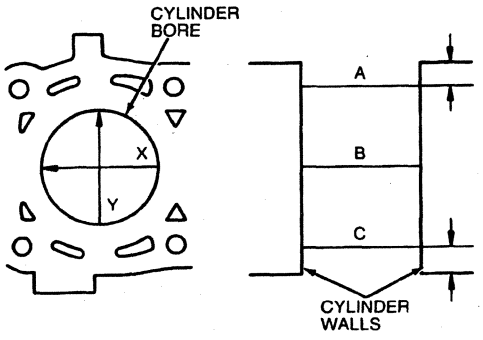

A14470-B

Cylinder Bore Taper

Subtract the micrometer reading from point C direction Y from point A direction Y. Also from point C direction X from point A direction X. Each difference should be less than 0.127 mm (0.005 inch). If taper exceeds this specification, cylinder will have to be refinished.

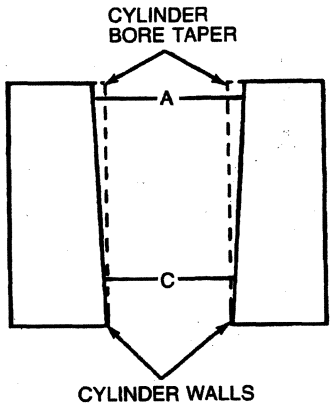

A14471-A

Cylinder Out-of-Round

Subtract the reading in direction X (non-thrust) from direction Y (thrust side) at all points A, B and C. All readings should be less than 0.127 mm (0.005 inch). If out-of-round exceeds this specification, cylinder will have to be refinished.

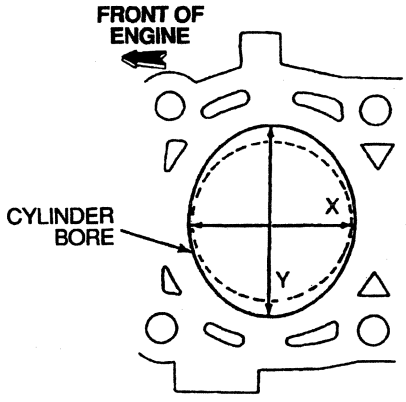

A23876-A

SERVICE PROCEDURES (Continued)

Cylinder Bore Diameter

1. Measure the diameter of the piston on the thrust side — at right angles to the piston pin — 16.5 mm (0.650 inch) below the oil ring groove.

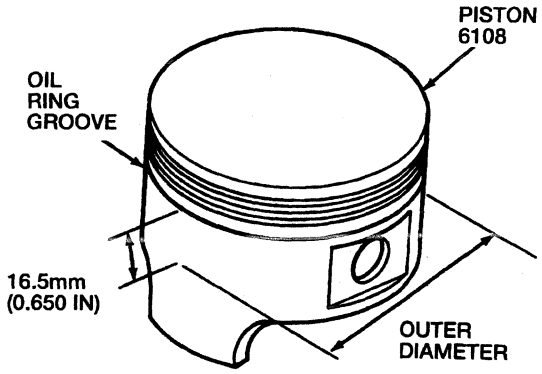

A14477-B

2. Measure the cylinder bore diameter at right angles to the piston pin at points A, B and C as described under Cylinder Bore Taper.
3. Subtract the piston diameter from the cylinder bore diameters. The difference should not exceed the maximum clearance allowed in the specifications in Section 03-01A (5.8L MFI), Section 03-01B (7.5L MFI) or Section 03-01C (7.3L diesel).

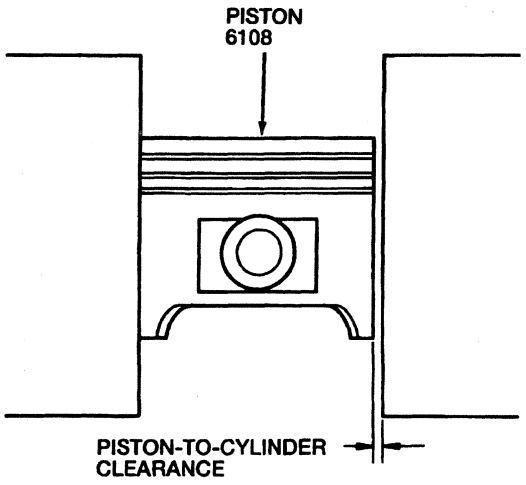

A14479-B

Cylinder Reboring

1. Reinstall main bearing caps and tighten to specifications in Section 03-01A (5.8L MFI), Section 03-01B (7.5L MFI) or Section 03-01C (7.3L diesel).
2. Refinish cylinder to a standard oversize following the tool manufacturer's instructions. Allow for honing and piston fitting.

Cylinder Wall Honing

Hone the cylinder bore in either of the following circumstances:

- When reinstalling a piston with new rings.
- To size a rebored cylinder to the piston that will go into it and prepare the bore surface.

1. Measure the diameter of the piston on the thrust side — at right angles to the piston pin — 16.5 mm (0.650 inch) below the oil ring groove.
2. Measure the cylinder bore diameter at right angles to the piston pin at points A, B and C as described under Cylinder Bore Taper.
3. Subtract the piston diameter from the maximum cylinder bore diameter to determine the maximum amount of material that can be removed.
4. Hone the cylinder according to the hone manufacturer's instructions to obtain the proper bore surface finish of 18-38 rms.
   - Keep the hone moving up and down to achieve the proper crosshatch pattern.
   - Measure frequently to make sure that you do not remove too much of the cylinder wall, creating excess clearance.

Engine Block Plugs

SPECIAL SERVICE TOOL(S) REQUIRED

Description	Tool Number
Impact Slide Hammer	T50T-100-A
Impact Slide Hammer	T59L-100-B

Removal and Installation

To remove a large core plug, drill a 12.70-mm (1/2-inch) hole in the center of the plug and remove with an Impact Slide Hammer T59L-100-B or T50T-100-A or pry it out with a large drift punch. On a small core plug, drill a 6.35-mm (1/4-inch) hole in the center of the plug and pry it out with a small pin punch. Clean and inspect the plug bore.

Prior to installing a core plug, the plug bore should be inspected for any damage that would interfere with the proper sealing of the plug. If the bore is damaged, it will be necessary to true the surface by boring for the next specified oversize plug.

Oversize plugs are identified by the OS stamped in the flat located on the cup side of the plug.

Coat the plug and/or bore lightly with an oil-resistant (oil galley) Stud and Bearing Mount EOAZ-19554-BA or equivalent meeting Ford specification WSK-M2G349-A1, or Threadlock® 262 E2FZ-19554-B or equivalent meeting Ford specification WSK-M2G351-A6, and install it following the procedure for cup-type or expansion-type below:

SERVICE PROCEDURES (Continued)

Cup-Type

Cup-type core plugs are installed with the flanged edge outward. The maximum diameter of this plug is located at the outer edge of the flange. The flange on cup-type plugs flare outward with the largest diameter of the outer (sealing) edge.

Expansion-Type

CAUTION: It is imperative to push or drive the plug into the machined bore using a properly designed tool. Do not drive the plug using a tool that contacts the crowned portion of the plug. This method will expand the plug prior to installation and can damage the plug and plug bore.

Expansion-type core plugs are installed with the flange edge inward. The maximum diameter of this plug is located at the base of the flange with the flange flaring inward.

When installed, the trailing (maximum) diameter must be below the chamfered edge of the bore to effectively seal the plugged bore.

If the core plug replacing tool has a depth seating surface, do not seat the tool against a nonmachined (casting) surface.

CAUTION: It is imperative to pull the plug into the machined bore by using a properly designed tool. Do not drive the plug into the bore using a tool that contacts the flange. This method will damage the sealing edge and can result in leakage and plug blowout.

The flanged (trailing) edge must be below the chamfered edge of the bore to effectively seal the plugged bore.

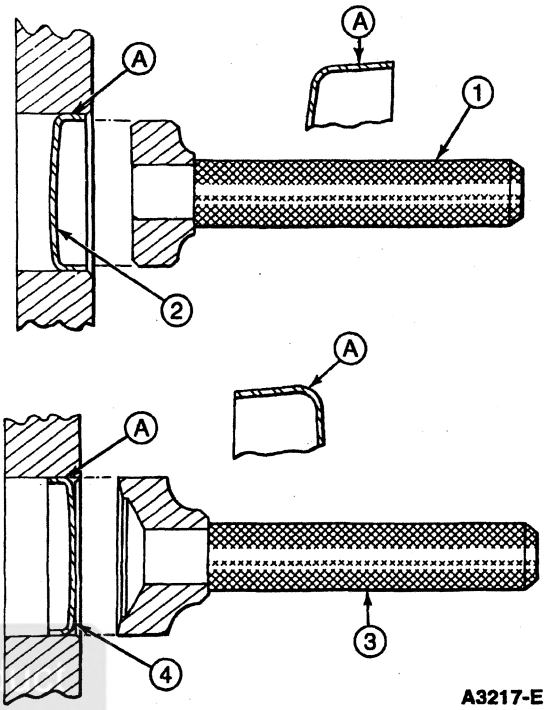

A3217-E

Item	Part Number	Description
1	—	Cup-Type Core Plug Replacer Tool — Typical
2	6026	Engine Block Plug — Cup-Type
3	—	Expansion-Type Core Plug Replacer Tool — Typical
4	6026	Engine Block Plug — Expansion-Type
A	—	Sealing Edge Before Installation

Crankshaft Main and Connecting Rod Bearings

Cleaning

NOTE: Do not scrape gum or varnish deposits from the bearing shells.

Identify bearings that are to be reused so they can be installed in their original locations.

Clean the bearing inserts and caps thoroughly in solvent, and dry them with compressed air.

SERVICE PROCEDURES (Continued)

Inspection

Inspect each bearing carefully. Replace bearings that have a scored, chipped or worn surface. Typical examples of unsatisfactory bearings and their causes are shown in the illustration. The copper lead bearing base might be visible through the bearing overlay. If the base showing is less than 20 percent of the total area, the bearing is not excessively worn. It is not necessary to replace the bearing if the bearing clearance is within recommended limits. Check the clearance of bearings that appear to be satisfactory with Plastigage® D81L-6002-B or equivalent as described in Crankshaft Main or Connecting Rod Bearings, Fitting, in this section.

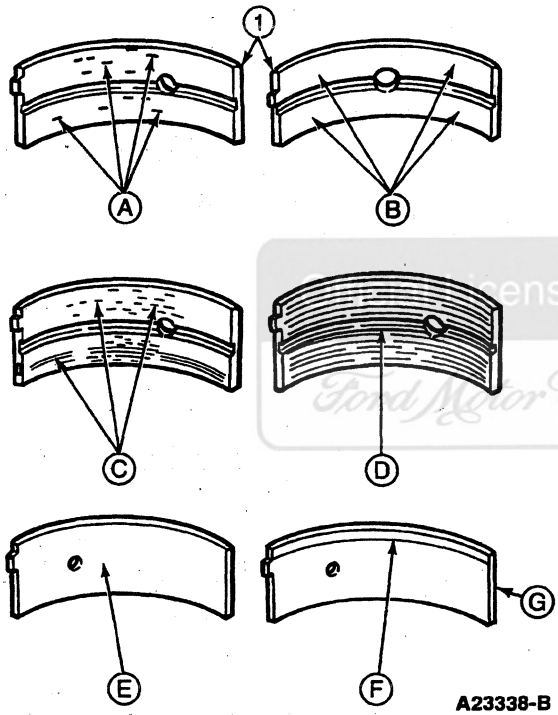

A23338-B

Item	Part Number	Description
1	6333	Connecting Rod Bearing
A	—	Fatigue Failure — Craters or Pockets
B	—	Improper Seating — Bright (Polished) Sections
C	—	Dirt Scratching, Imbedding
D	—	Overlay Wiped Out — Lack of Oil or Improper Clearance
E	—	Hourglass — Overlay Gone from Edges
F	—	Radius Ride
G	—	Edge Worn — Bearing Off Location

Crankshaft Main or Connecting Rod Bearings, Fitting

Plastigage® Method

1. Clean crankshaft journals. Inspect journals and thrust faces for nicks, burrs or roughness that would cause premature bearing wear. When replacing standard bearings with new bearings, it is good practice to fit bearing to minimum specified clearance. If desired clearance cannot be obtained with a standard bearing, try a 0.050-mm (0.002-inch) undersize bearing set to obtain proper clearance.
2. **CAUTION: Do not position jack under crankshaft pulley. Crankshaft post damage will result.**

   If fitting main bearing in-vehicle, position a jack under counterweight adjoining bearing which is being checked. Support crankshaft (6303) with jack so its weight will not compress Plastigage® D81L-6002-B or equivalent and provide an erroneous reading.
3. Place a piece of Plastigage® D81L-6002-B or equivalent on bearing surface across full width of bearing cup and about 6.35 mm (1/4 inch) off center.

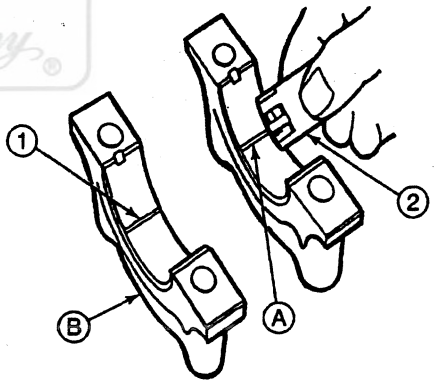

A23339-A

Item	Part Number	Description
1	D81L-6002-B	Plastigage®
2	—	Plastigage® Scale (Part of D81L-6002-B)
A	—	Check Width of Plastigage®
B	—	Location of Plastigage® Prior to Tightening

4. Install cap and tighten bolts to specification. Do not turn crankshaft while Plastigage® is in place.
5. Remove cap. Using Plastigage® scale, check width of Plastigage® at widest point to get minimum clearance. Check at narrowest point to get maximum clearance. Difference between reading is taper of journals.

Ford Motor Company

SERVICE PROCEDURES (Continued)

6. If bearing clearance exceeds the specified limits, try using one of the various combinations of undersize bearings as directed by the accompanying table. Use of any other bearing combination is not recommended. Bearing clearance must be within specified limits. Refer to Specifications in Section 03-01A (5.8L MFI), Section 03-01B (7.5L MFI) or Section 03-01C (7.3L diesel) for main and connecting rod bearing clearance limits. If use of these bearing combinations does not bring clearance to the desired limits, refinish the crank journal to a standard undersize, and use the appropriate undersize bearing.
7. After bearing has been fitted and cleaned, apply a light coat of engine oil to journal and bearings. Install bearing cap. Tighten cap bolts to specification.
8. Repeat procedure for remaining bearings that require replacement.
9. Refer to Crankshaft End Play procedure in this section for proper thrust bearing seating.

CRANKSHAFT BEARINGS

For This Amount Of Bearing Clearance Excess		Use This Bearing Size			
		(Upper Bearing)		(Lower Bearing)	
mm	Inch	mm	Inch	mm	Inch
0.0-0.013	0.0-0.0005	0.025	0.001 U.S.	Standard	Standard
0.013-0.026	0.0005-0.0010	0.025	0.001 U.S.	0.025	0.001 U.S.
0.026-0.039	0.0010-0.0015	0.050	0.002 U.S.	0.025	0.001 U.S.
0.039-0.052	0.0015-0.0020	0.050	0.002 U.S.	0.050	0.002 U.S.

Ford Motor Company Official Licensed Product

Bore Gauge Method

1. Install bearings in the cylinder blocks (6010) and bearing caps.
2. Install crankshaft and tighten main bearing cap bolts to the specified torque. Refer to Section 03-01A (5.8L MFI), Section 03-01B (7.5L MFI) or Section 03-01C (7.3L diesel).
3. Remove bearing caps and crankshaft.
4. Reinstall bearing caps with bearings still installed in cylinder blocks and caps.
5. Tighten bearing cap bolts to torque specified in Section 03-01A (5.8L MFI), Section 03-01B (7.5L MFI) or Section 03-01C (7.3L diesel).
6. Using micrometer, measure main bearing journals.
7. Using bore gauge, measure the inside diameter of each bearing assembly. It might be necessary to measure the outer bearings first; then remove those caps and measure the inner bearings.
8. Subtract the maximum measurement for each journal from the minimum measurement of each bearing to determine the minimum oil clearance.

   Allowable clearances are as follows:

   - 5.8L 0.020-0.066 mm (0.0008-0.0026 inch)
   - 7.5L 0.023-0.069 mm (0.0009-0.0027 inch)
   - 7.3L diesel 0.046-0.0914 mm (0.0018-0.0036 inch)

Crankshaft

Cleaning

CAUTION: Handle the crankshaft (6303) with care to avoid possible damage to the finished surfaces.

Clean the crankshaft with solvent, then blow out all oil passages with compressed air.

Inspection

Measure the diameter of each journal in at least four places to determine an out-of-round, taper or undersize condition. For specifications, refer to Section 03-01A (5.8L MFI), Section 03-01B (7.5L MFI) or Section 03-01C (7.3L diesel).

On an engine (6007) with a manual transmission (7003), check the fit of the pilot bearing in the bore of the crankshaft. A needle roller bearing and adapter assembly is used as a pilot bearing. It is press fit directly into the engine crankshaft and should not be loose. Inspect the inner surface of the pilot bearing for wear or a bell-mouth condition. Check the inside diameter of the pilot bearing to see if it is worn or damaged. The bearing and adapter assembly cannot be serviced separately. The pilot bearing can only be installed with the seal end of the bearing facing the transmission. The bearing and seal are pregreased and do not require additional lubrication.

NOTE: A new bearing must be installed whenever a bearing is removed.

Inspect the pilot bearing, when used, for roughness, evidence of overheating or loss of lubricant. Replace if any of these conditions are found.

SERVICE PROCEDURES (Continued)

Crankshaft Runout

1. NOTE: Check crankshaft journals for out-of-round before checking for runout, or an out-of-round condition on the center journal can be confused for an excess runout condition.

   Set V-blocks on surface plate and set crankshaft on V-blocks supported on the outer two main bearing journals.
2. Set up Dial Indicator with Bracketry TOOL-4201-C or equivalent to measure runout on center main bearing journal.
3. Zero dial indicator.
4. Slowly rotate crankshaft one revolution, recording highest and lowest readings.
5. Crankshaft runout should not exceed 0.03 mm (0.0012 in.). If crankshaft runout is excessive, replace crankshaft.

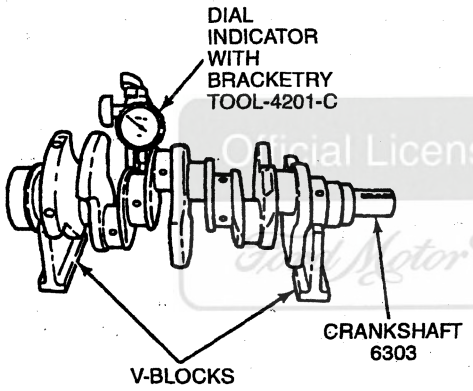

A24061-A

Crankshaft End Play

Refer to crankshaft end play elsewhere in this section. Crankshaft must be installed in block with the bearings that will be used, but without connecting rods (6200), pistons, or flywheel (6375) installed to check end play.

Journals, Refinishing

Dress minor imperfections such as scores, nicks or burrs with an oil stone.

If journals are severely marred or exceed service limits for wear, taper, or out of round, refinish to size for the next undersize crankshaft main bearing.

Follow crankshaft lathe manufacturer's instructions for refinishing crankshaft.

If the journals will not clean up to less than the maximum undersize bearing available, replace the crankshaft.

Always reproduce the same journal shoulder radius that existed originally. Too small a radius will result in fatigue failure of the crankshaft. Too large a radius will result in bearing failure due to radius ride of the crankshaft bearing.

After refinishing the journals, chamfer the oil holes. Polish the journals with a No. 500 grit polishing cloth and engine oil (crocus cloth can also be used as a polishing agent) to obtain a smooth finish.

Crankshaft Sprocket

Inspect crankshaft sprocket or gear for chipped, broken, or excessively worn teeth. If necessary, remove and replace. Refer to Section 03-01A (5.8L MFI), Section 03-01B (7.5L MFI) or Section 03-01C (7.3L diesel).

Pistons, Piston Pins and Piston Rings

SPECIAL SERVICE TOOL(S) REQUIRED

Description	Tool Number
Engine Cylinder Hone Set	T73L-6011-A

Cleaning

- Clean piston using suitable solvent.
- Use a putty knife or scraper to help clean carbon off of the top of the piston.
- Do not use a power wire brush to clean the piston skirt, crown, or piston ring grooves; it will remove metal.
- If using a ring groove scraper, be careful not to remove metal from the piston ring lands.

Inspection

Inspect for:

- Hole or crack in top of piston caused by preignition or foreign object damage.
- Excess wear in ring lands indicated by visible steps worn in ring lands.
- Scoring or gouges on piston skirt or crown.
- Looseness between piston and piston pin.

Pistons — Fitting

NOTE: There are two procedures for piston fitting. One is used when the original standard-size bore shows little wear and can be cleaned up. The second is used after the cylinder has been rebored.

Original Bore

1. Measure cylinder bore. If cylinder bore is not damaged and wear, taper, and out-of-round are within specifications listed in Section 03-01A (5.8L MFI), Section 03-01B (7.5L MFI) or Section 03-01C (7.3L diesel), then the cylinder bore can be cleaned up and reboring is unnecessary.

Official Licensed Product Ford Motor Company

SERVICE PROCEDURES (Continued)

2. Hone cylinder, if necessary, to restore a proper crosshatch pattern so new rings can seat. *Remove as little of the cylinder wall as possible.*
   - If clearance exceeds specifications, the piston will have to be replaced.
   - If clearance is within specifications, proceed to assemble and install the piston. Refer to Section 03-01A (5.8L MFI), Section 03-01B (7.5L MFI) or Section 03-01C (7.3L diesel).

   Red and blue select fit pistons are available for select fitting a standard size bore if only a slight cleanup was required. A 0.076-mm (0.003-inch) oversize piston is available if greater cleanup is required. Refer to Master Parts Catalogue.
3. Subtract from cylinder bore dimension determined earlier. If within specifications in Section 03-01A (5.8L MFI), Section 03-01B (7.5L MFI) or Section 03-01C (7.3L diesel), proceed to install the piston. If not, try the other color piston. If neither of the standard bore color pistons can be brought within the maximum clearance, proceed to fit the 0.076-mm (0.003-inch) piston.

After Reboring

1. NOTE: When reboring cylinder, leave bore 0.13-mm (0.005-inch) undersize to allow for honing and fitting piston.

   Measure the diameter of the oversize piston on the thrust side at right angles to the piston pin 16.5 mm (0.650 inch) below the oil ring groove.
2. Remeasure the cylinder bore.
3. Subtract the piston diameter from the cylinder bore diameter to determine how much material must be removed during honing to establish correct piston-to-cylinder bore clearance in Specifications in Section 03-01A (5.8L MFI), Section 03-01B (7.5L MFI) or Section 03-01C (7.3L diesel).
4. Using T73L-6011-A Engine Cylinder Hone Set, hone the cylinder bore to bring the piston-to-cylinder clearance within specifications.
   - Take frequent measurements to assure you do not remove too much metal from the cylinder bore.
   - Move hone up and down to attain proper crosshatch pattern and prevent tapering cylinder bore.
5. Once proper fit and crosshatch pattern is achieved, proceed to assemble and install piston. Refer to Section 03-01A (5.8L MFI), Section 03-01B (7.5L MFI) or Section 03-01C (7.3L diesel). If the entire engine is being rebuilt, make sure piston and rod assemblies are marked so each piston is installed in the bore to which it was fitted.

Piston Rings — Fitting

Do not reinstall used piston rings. A special break-in finish, and sometimes an anti-scuff coating, is applied to new piston rings by the factory. The purpose of the special finish is to help the new piston rings and cylinder bore mate properly. The special finish, like the crosshatching on the cylinder bore, wears off during break-in. The special finish will be already worn off used rings so they will not seat properly. For this reason attempting to reuse piston rings can lead to excess oil consumption and possible cylinder scoring.

1. Insert each piston ring backwards (see illustration) in the piston ring groove into which it will be installed.
2. Measure the clearance between the ring and groove (side clearance) with a feeler gauge and check against the side clearance specifications in Section 03-01A (5.8L MFI), Section 03-01B (7.5L MFI) or Section 03-01C (7.3L diesel).

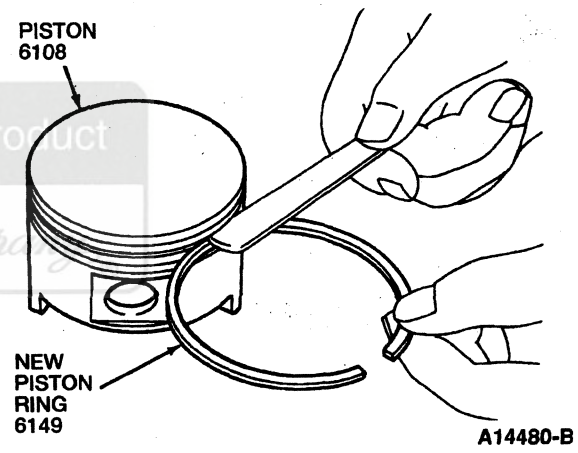

3. Insert the ring in the cylinder bore.
4. Using the piston, without rings, turned upside down, press the ring down to the center of the bore.

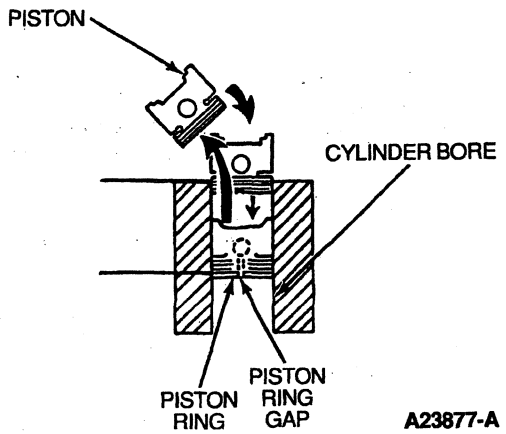

5. Make sure that the ring is "square" in the bore.

Official Licensed Product Ford Motor Company

SERVICE PROCEDURES (Continued)

Piston Ring End Gap

1. Check the piston ring end gap specification in Section 03-01A (5.8L MFI), Section 03-01B (7.5L MFI) or Section 03-01C (7.3L diesel). Using a feeler gauge, check the piston ring end gap.

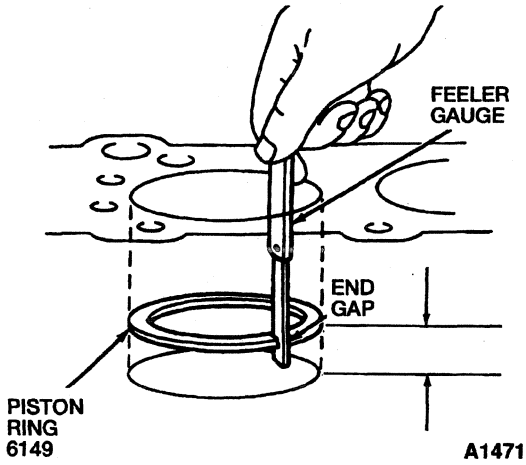

A14712-B

2. If the ring gap is too small, the ring will have to be filed until the end gap is within specifications. The use of a ring filing block helps to ensure that the ring ends are filed square.

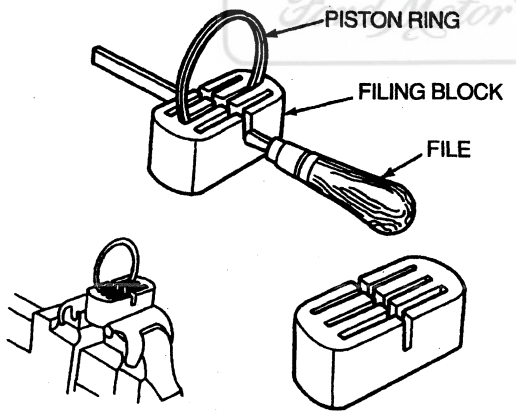

A23878-A

3. **CAUTION: Install the piston rings after the piston has been installed on the connecting rod. Since the piston can be supported by the crown during this operation, the rings could be damaged.**

   CAUTION: Use a piston ring expander to install the piston rings. Attempting to wind them on by hand can put a deep scratch in the piston or break the ring.

   Using a piston ring expander, install the piston rings starting with the oil control rings. Make sure rings are installed right side up. Refer to instructions with the ring set.

4. Rotate the rings so the end gaps are not lined up but are spaced properly as shown.

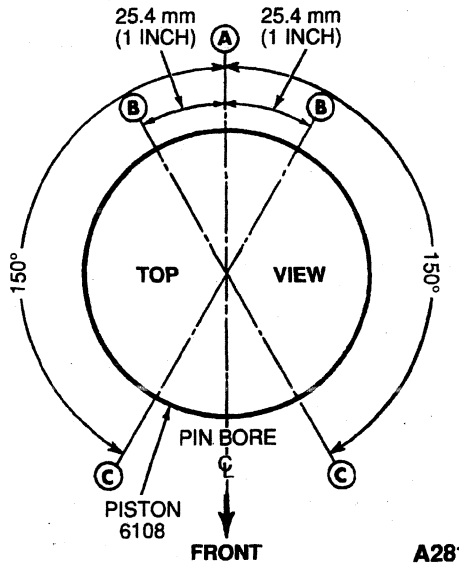

A2811-C

5. Using a feeler gauge, recheck piston ring side clearance.

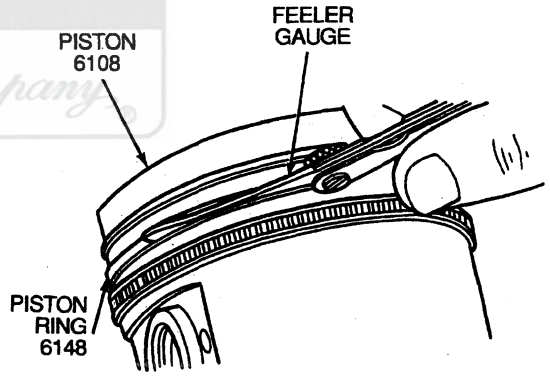

A23879-A

6. Continue with engine assembly. Refer to Section 03-01A (5.8L MFI), Section 03-01B (7.5L MFI) or Section 03-01C (7.3L diesel).

Piston and Piston Pin Fit

NOTE: New pistons come with fitted pins and should not require refitting unless the connecting rod bore is oversize.

The Ford 5.8L and 7.5L gasoline engines and the 7.3L diesel engine all use piston pins that press into the connecting rod. The piston pivots on the pin. There is no connecting rod bushing and there is a friction fit between the piston pin and the connecting rod (6200).

Refer to Section 03-01A (5.8L MFI), Section 03-01B (7.5L MFI) or Section 03-01C (7.3L diesel), for specifications and assembly instructions.

1. Clean and inspect the connecting rod.
2. Clean and inspect the piston and pin.

Licensed Product Ford Motor Company

SERVICE PROCEDURES (Continued)

3. Using a suitable micrometer, measure the piston pin both places where the piston pivots and in the center where it is pressed into the connecting rod.
4. Using a suitable set of plug gauges, measure the upper bore of the connecting rod. An interference fit is required. If the bore is oversize it will be necessary to install an oversize piston pin. It is not necessary to rebore or ream the connecting rod.
5. If the pin-to-rod fit is OK, measure the piston pin bores in the piston.
6. Subtract the piston pin size from the piston pin bore sizes. Pin-to-piston clearance is listed in Specifications in Section 03-01A (5.8L MFI), Section 03-01B (7.5L MFI) or Section 03-01C (7.3L diesel).

   If clearance is excessive it will be necessary to fit an oversize pin.
7. To fit an oversize piston pin because either the pin-to-connecting rod or pin-to-piston clearance was excessive:
   - Obtain an appropriate oversize piston pin.
   - Hone or ream the piston pin bores in the piston to obtain the correct clearance.
   - It is not necessary to hone or ream the connecting rod piston pin bore oversize.
8. Once pin, connecting rod, and piston are correctly sized to each other, assemble as described in Section 03-01A (5.8L MFI), Section 03-01B (7.5L MFI) or Section 03-01C (7.3L diesel).

Piston Pin-to-Piston Clearance

Refer to Piston and Piston Pin Fit in this section.

Connecting Rods

Cleaning

Remove the connecting rod bearings (6211) from the rod and cap. Identify each bearing location if they are to be used again. Clean the connecting rod (6200) in solvent, including the rod bore and the back of the inserts. Do not use a caustic cleaning solution. Blow out all passages with compressed air.

Inspection

The connecting rod bearings and related parts must be carefully inspected and checked for conformance to specifications. For specifications, refer to the appropriate engine section. Various forms of engine wear caused by these parts can be readily identified.

A shiny surface on either pin boss inside of the piston usually indicates that a connecting rod is bent.

Abnormal connecting rod bearing wear can be caused by either a bent connecting rod, worn or damaged piston pin, or a tapered connecting rod bore.

Twisted connecting rods can create an identifiable piston skirt wear pattern, but badly twisted rods will disturb the action of the entire piston, rings, and connecting rod assembly and may be the cause of excessive oil consumption.

Check the connecting rods for bend or twist on a suitable alignment fixture. Follow the instructions of the fixture manufacturer. If the bend or twist exceeds specification, the connecting rod must be replaced.

Inspect the connecting rods for signs of fractures and the rod bearing bores for out-of-round and taper. If the bore exceeds the recommended limits or if the connecting rod is fractured, replace it.

Camshaft Journals

Cleaning

1. If not done as part of engine disassembly, remove camshaft center bearing (6262) or gear from camshaft (6250) and camshaft from engine (6007). Refer to Section 03-01A (5.8L MFI), Section 03-01B (7.5L MFI) or Section 03-01C (7.3L diesel).
2. Clean the camshaft in an appropriate solvent and wipe it dry.
3. Remove light scuffs, scores, or nicks from the camshaft machined surfaces with an oil stone.

Inspection

Inspect the camshaft journals and lobes for scoring and signs of abnormal wear.

Lobe pitting, except in the general area of the lobe toe, is not detrimental to the operation of the camshaft. Do not replace the camshaft unless lobe lift loss has exceeded the specifications or pitting has occurred in the lobe lift area.

Camshaft Runout

NOTE: Check camshaft journals for out of round *before checking for runout; an out of round condition* on the center journal could be confused for an excess runout condition.

1. Set suitable V-blocks on surface plate. Support outer camshaft journals on V-blocks.
2. Set up Dial Indicator with Bracketry TOOL-4201-C or equivalent to check center bearing journal.
3. Zero dial indicator.

Ford Motor Company Licensed Product

SERVICE PROCEDURES (Continued)

4. Slowly rotate camshaft to determine overall runout. If runout exceeds 0.03 mm (0.0012 in.), replace camshaft.

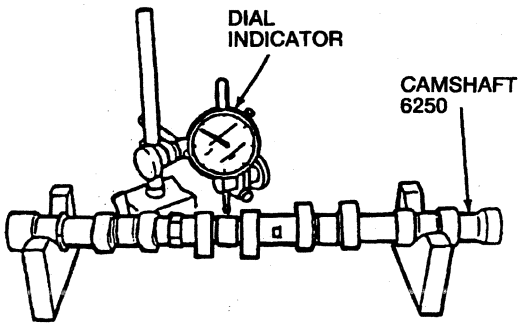

A14453-B

Cam Lobe Lift (Camshaft Removed)

There are two ways of measuring cam lobe lift with the camshaft removed: with a vernier caliper camshaft or on a lathe or cam grinder with a dial indicator. The second method is more accurate.

With Calipers

1. Inspect camshaft as described in this section.
2. Measure the distance of each cam at the major diameter.
3. Measure the distance of each cam at the minor diameter.
4. For each cam, subtract the minor diameter from the major diameter. The result for each lobe is the lobe lift.
5. Check the lobe lift for each cam against the specifications in Section 03-01A (5.8L MFI), Section 03-01B (7.5L MFI) or Section 03-01C (7.3L diesel).
6. If any cam is worn excessively, the camshaft and valve tappet (6500) will have to be replaced.

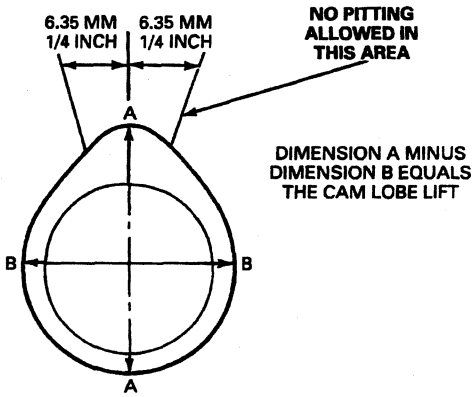

A21328-A

On a Camshaft Grinder or Lathe

1. Clean and inspect the camshaft as described in this section.
2. Install the camshaft on the lathe or camshaft grinder centers.
3. Position the dial indicator which comes with the machine at the heel of the cam that you are going to check.
4. Zero the dial indicator.
5. Slowly turn the camshaft until the point of the dial indicator is on the tip of the cam.
6. Read the dial indicator. This is your cam lobe lift.
7. Check the lobe lift against the specifications in Section 03-01A (5.8L MFI), Section 03-01B (7.5L MFI) or Section 03-01C (7.3L diesel). If any cam is excessively worn, the camshaft and valve tappet will have to be replaced.

Camshaft Bearings

1. If engine has not been disassembled and cleaned, wipe bearing bore clean with a clean rag and solvent. Dry with a clean rag.
2. Inspect for scoring and visible wear. Inspect if babbitt has been worn away to base. If visibly worn or damaged, bearings will have to be replaced. If one of the center bearings is worn significantly more than the end bearings, check camshaft for excessive runout.
3. Using suitable bore gauge or inside micrometer, measure each bearing twice, 90 degrees apart, to determine bearing size and out of round.
4. Check results against specifications in Section 03-01A (5.8L MFI), Section 03-01B (7.5L MFI) or Section 03-01C (7.3L diesel). If bearings are out of specifications, they will have to be replaced. Check camshaft journals before replacing bearings to determine if undersize bearings are required.
5. If necessary, replace bearings. Refer to Section 03-01A (5.8L MFI), Section 03-01B (7.5L MFI) or Section 03-01C (7.3L diesel).

Camshaft Journal Oil Clearance

1. Measure camshaft bearings and camshaft bearing journals as described in this section.
2. Subtract size of journal from the size of its bearing.
3. Check clearance against specifications in Section 03-01A (5.8L MFI), Section 03-01B (7.5L MFI) or Section 03-01C (7.3L diesel).
4. If clearance is excessive, but camshaft journals are within specifications, simply install new bearings. If both bearings and journals are worn, turn camshaft journals to a standard undersize and install new bearings.

Camshaft Journal Diameters

1. Measure each journal twice, 90 degrees apart, to determine journal wear, size, and out of round.

Official Licensed Product Ford Motor Company

SERVICE PROCEDURES (Continued)

2. Check measurements against specifications in Section 03-01A (5.8L MFI), Section 03-01B (7.5L MFI) or Section 03-01C (7.3L diesel).
3. If journals are excessively out of round or worn, regrind to a standard undersize. Refer to Master Parts Catalogue. If journals are too worn to be refinished to an available undersize, camshaft will have to be replaced.

Camshaft Sprocket

Inspect camshaft sprocket or gear for worn or broken teeth, and remove if necessary. Refer to Section 03-01A (5.8L MFI), Section 03-01B (7.5L MFI) or Section 03-01C (7.3L diesel).

Hydraulic Valve Tappets

Valve tappets (6500) should be kept in proper sequence so they can be installed in their original position. Inspect and test each valve tappet separately so as not to intermix. If any part of the valve tappet needs replacing, replace the entire assembly.

Cleaning

Thoroughly clean all the parts in clean solvent and wipe them with a clean, lint-free cloth.

Inspection

Inspect the parts and discard the entire valve tappet if any part shows pitting, scoring or excessive wear. Replace the entire assembly if the plunger is not free in the body. The plunger should drop to the bottom of the body by its own weight when assembled dry and check ball assembly removed.

Assemble the valve tappet and check for freeness of operation by pressing down on the plunger. The valve tappets can also be checked with a hydraulic tester to test the leak-down rate. Follow the instructions of the test unit manufacturer or Leak-Down Testing in this section.

Valve, Flat, Tappet Wear

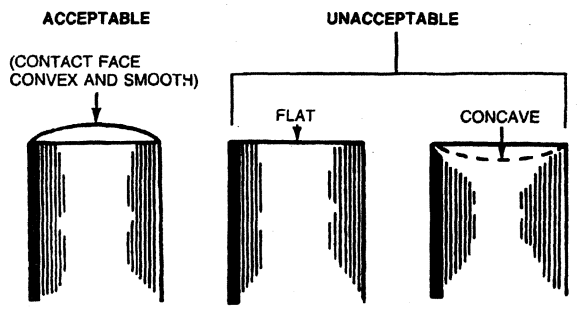

A4290-B

Leak-Down Testing

Remove tappets. Refer to Section 03-01A (5.8L MFI), Section 03-01B (7.5L MFI) or Section 03-01C (7.3L diesel).

1. NOTE: Do not mix parts from different valve tappets. Parts are select-fitted and are not interchangeable.

   NOTE: Valve tappet cannot be checked with engine oil in it. Only testing fluid can be used.

   Disassemble and clean valve tappet to remove all traces of engine oil.
2. Place valve tappet in tester, with plunger facing upward. Pour hydraulic tester fluid into cup to a level that will cover valve tappet assembly. The fluid can be purchased from manufacturer of tester. Using kerosene or any other fluid will not provide an accurate test.
3. Place 7.94-mm (5/16-inch) steel ball provided with tester in plunger cap.

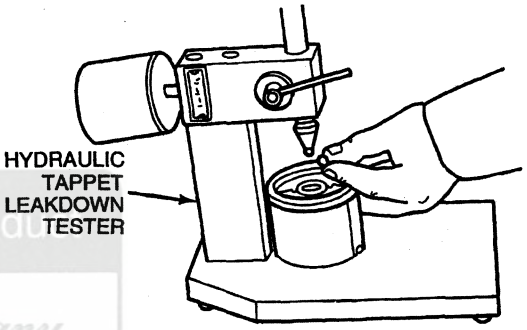

DA0965-A

4. Adjust length of ram so that pointer is 1.59 mm (1/16 inch) below starting mark when ram contracts tappet plunger, to facilitate timing as pointer passes start timing mark. Use center mark on pointer scale as stop timing point instead of original stop timing mark at top of scale.

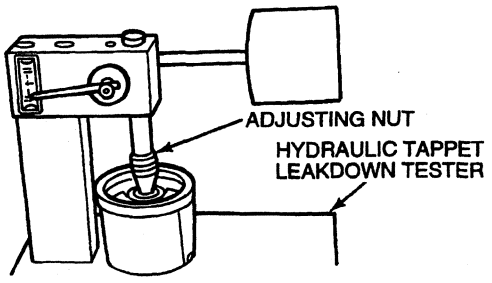

DA0966-A

5. Work tappet plunger up and down until tappet fills with fluid and all traces of air bubbles have disappeared.
6. Allow ram and weight to force tappet plunger downward. Measure exact time it takes for pointer to travel from start timing to stop timing marks of tester.

Official Licensed Product Ford Motor Company

SERVICE PROCEDURES (Continued)

7. NOTE: Refer to the Specifications portion of Section 03-01A (5.8L MFI), Section 03-01B (7.5L MFI) or Section 03-01C (7.3L diesel) for hydraulic lifter leak-down rates.

   A satisfactory valve tappet must have a leak-down rate (time in seconds) within minimum and maximum limits specified.
8. Remove fluid from cup and bleed fluid from valve tappet by working plunger up and down. This step will aid in depressing tappet plungers when checking valve clearance.
9. If a valve tappet is not within specifications:
   - Remove camshaft (6250). Refer to Section 03-01A (5.8L MFI), Section 03-01B (7.5L MFI) or Section 03-01C (7.3L diesel).
   - Inspect camshaft and check condition and cam lobe lift as described in this section.
   - Replace defective valve tappets with new ones. It is not necessary to disassemble and clean new valve tappets to test them since they are shipped with testing fluid.

Oil Pump, Gasoline Engines

Oil Pump, Typical, Gasoline Engines

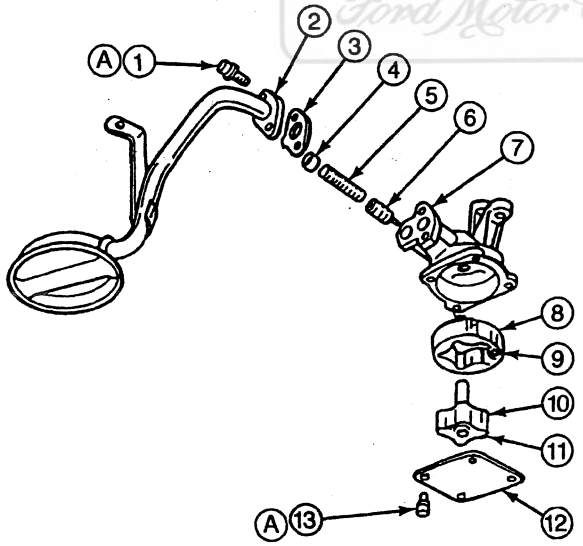

A23880-A

Item	Part Number	Description
1	—	Bolt (Part of 6600)
2	6622	Oil Pump Screen Cover and Tube
3	6626	Oil Pump Inlet Tube Gasket
4	—	Plug (Part of 6600)

(Continued)

Item	Part Number	Description
5	—	Oil Relief Valve Spring (Part of 6600)
6	—	Oil Relief Valve Plunger (Part of 6600)
7	—	Oil Pump Body (Part of 6600)
8	—	Outer Rotor (Part of 6600)
9	—	Identification Mark (Part of 6600)
10	—	Inner Rotor (Part of 6600)
11	—	Identification Mark (Part of 6600)
12	—	Cover Plate (Part of 6600)
13	—	Bolt (Part of 6600)
A	—	Tighten to 14-20 N·m (11-15 Lb-Ft)

Cleaning

1. If not removed as part of engine disassembly, remove oil pump (6600). Refer to Section 03-01A (5.8L MFI), Section 03-01B (7.5L MFI) or Section 03-01C (7.3L diesel).
2. If not done already, lift out oil pump intermediate shaft (6A618).
3. Remove two screws, oil pump screen cover and tube (6622), and oil pump inlet tube gasket (6626).
4. Remove the cover retaining bolts and the cover.
5. Remove the inner rotor and shaft assembly, then the outer race.
6. Drill a small hole and insert a self-threading sheet metal screw of the proper diameter into the oil pressure relief valve chamber cap and pull the cap out of the chamber. Remove the spring and plunger.
7. Clean all parts in solvent and dry them thoroughly with compressed air. Use a brush to clean the inside of the oil pump housing and pressure relief valve chamber. Make sure all dirt and metal particles are removed.

Inspection

1. Look for deep scoring in cover. Light concentric scratches only indicate that the pump has been used and are acceptable. If cover is deeply scored, replace oil pump.
2. Look for scoring or wear on the shaft. If severely scored, replace.
3. Inspect the rotor for burrs or score marks.
4. Remove minor imperfections from parts with an oil stone.

Official Licensed Product Ford Motor Company

SERVICE PROCEDURES (Continued)

Rotor Clearance

1. Using a straightedge and feeler gauge, make sure inside of cover is flat. If a 0.038-mm (0.0015-inch) feeler gauge can go under straightedge, oil pump should be replaced.
2. Insert the inner and outer rotor into the housing.
3. Place a straightedge over the rotor assembly and the housing.
4. Measure the clearance between the straightedge and the inner rotor, then the outer rotor. Clearance must not exceed 0.10 mm (0.004 inch).
5. NOTE: The oil pump on the 7.3L diesel engine has a maximum gear recession into the housing of 0.076 mm (0.003 inch).

   If clearance is excessive, replace oil pump.

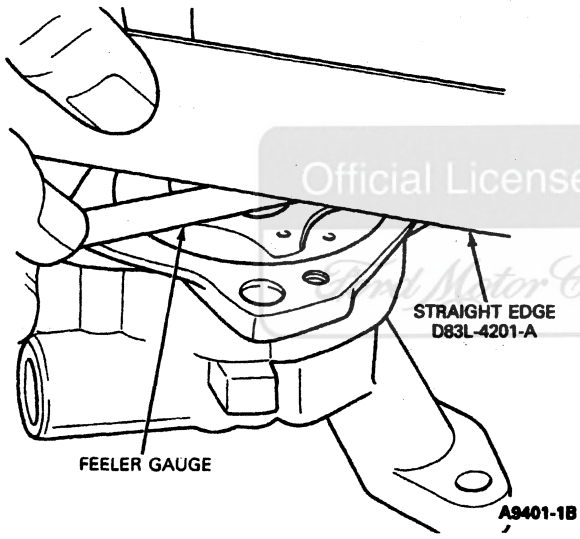

Tooth Tip Clearance

1. With inner and outer rotor installed, use feeler gauge to measure clearance between inner and outer rotor at tip of inner rotor furthest from outer rotor.
2. Check against specifications in Section 03-01A (5.8L MFI), Section 03-01B (7.5L MFI) or Section 03-01C (7.3L diesel).
3. If clearance is excessive, replace oil pump.

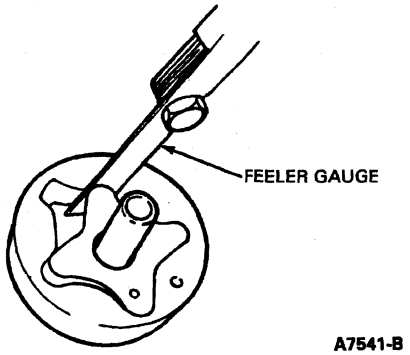

Outer Rotor-to-Pump Body Clearance

1. Using feeler gauge measure clearance between outer rotor (race) and housing.
2. Check against specifications in Section 03-01A (5.8L MFI), Section 03-01B (7.5L MFI) or Section 03-01C (7.3L diesel).
3. If clearance is excessive, replace oil pump.

Pressure Regulator Valve Inspection

Inspect valve plunger for scoring and free operation. Light scratches may be removed with a crocus cloth.

Pressure Regulator Valve Spring Inspection

1. Inspect for breaks, cracks, tilting, and collapsed coils.
2. Using Valve/Clutch Spring Tester TOOL-6513-DD or equivalent, check valve spring tension. Check against specifications in Section 03-01A (5.8L MFI), Section 03-01B (7.5L MFI) or Section 03-01C (7.3L diesel). A weak spring must be replaced.

Pressure Regulator Valve-to-Housing Clearance

1. Using plug gauge, measure regulator valve bore.
2. Using micrometer, measure outside of plunger.
3. Subtract plunger diameter from bore size and check against specifications in Section 03-01A (5.8L MFI), Section 03-01B (7.5L MFI) or Section 03-01C (7.3L diesel).
4. If clearance is excessive, replace oil pump.

Oil Pump, 7.3L Diesel Engine

Hard Start — No Start Dry Reservoir

Inspection

1. NOTE: Low oil pressure from the engine oil pump can cause low oil levels in the oil reservoir.

   Perform oil pump pressure test. Refer to Oil Pump Inspection in Section 03-01C.
2. Remove oil reservoir fill plug and refill reservoir.
3. Start engine, and test drive vehicle for 16 km (10 miles).

SERVICE PROCEDURES (Continued)

4. Remove oil reservoir fill plug, and verify reservoir is full.
5. Inspect oil reservoir and engine front cover for evidence of oil leakage. If leakage is detected, service or replace as necessary.
6. If no evidence of oil leakage is found, allow vehicle to sit overnight.
7. NOTE: Perform following step before starting engine.

   Remove oil reservoir fill plug and inspect reservoir oil level to determine if leak-down has occurred.
8. If oil leak-down has been confirmed and no evidence of leakage can be found around oil reservoir or engine front cover, then the leakage point most likely will be the anti-drainback check valve integral to the high-pressure oil pump. Replace high-pressure oil pump. Refer to Section 03-01C. Retest for leak-down.

Oil Pan

Cleaning

1. Scrape any dirt or metal particles from the inside of the oil pan (6675).
2. Scrape all old gasket material from the gasket surface.
3. Wash the oil pan in a solvent and dry it thoroughly.
4. Make sure all foreign particles are removed.

Inspection

1. Check the oil pan for cracks, holes or damaged drain plug threads.
2. Check the gasket surface for damage caused by over-tightened bolts.
3. Replace with a new oil pan if repairs cannot be made.

Cylinder Heads

Cleaning

1. With the valves installed to protect the valve seats, remove deposits from the combustion chambers and valve heads with a scraper and a wire brush. Be careful not to damage the cylinder head gasket surface.
2. After the valves are removed, clean the valve guide bores. Use cleaning solvent to remove dirt, grease and other deposits from the valves with a fine wire brush or buffing wheel.

Inspection

1. Inspect the cylinder heads (6049) for cracks or excessively burned areas in the exhaust outlet ports.
2. Check the cylinder head for cracks and inspect the gasket surface for burrs and nicks. Small imperfections of this type can be dressed down using an oil stone. Replace the cylinder head if it is cracked.

The following inspection procedures are for a cylinder head that is to be completely overhauled. For individual repair operations, use only the pertinent inspection procedure.

Spark Plug Thread Service

NOTE: The use of power or air driven tools is not approved for the installation of tapersets.

Damaged spark plug threads in the cylinder head can be serviced using Rotunda Thread Repair Kit 107-R0921 or equivalent.

The procedure involves cutting new threads in the spark plug hole. After rethreading operation, a tapered sleeve will be installed in the cylinder head. The sleeve is threaded on the inside and outside. The outside threads into the cylinder head while the inside provides new threads for the spark plug (12405).

The service is permanent and will have no effect on cylinder head or spark plug life.

1. **CAUTION: The cylinder head must be removed from engine (6007) before installing a taperset. The service procedure includes a thread cutting process that produces metal chips. Performing this procedure while the cylinder head is on the engine will cause metal chips to fall into the cylinder. Once in the cylinder, these chips can damage the cylinder wall when the engine is started.**

   Thoroughly clean spark plug counterbore, seat and threads of all dirt or other foreign material.

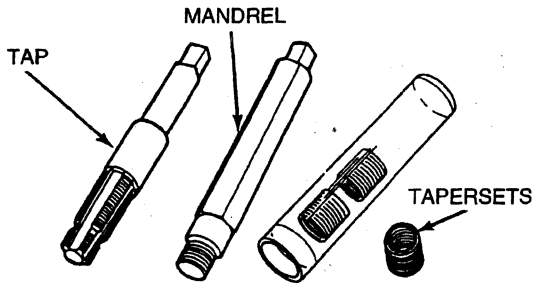

ROTUNDA SPARK PLUG REPAIR KIT 107-R0921

A24063-B

2. Start tap into spark plug hole, being careful to keep it properly aligned.

   As tap begins cutting new threads, apply aluminum cutting oil to tap.

   Continue cutting threads and applying oil until stop ring bottoms against spark plug seat.
3. Remove tap. Remove all metal chips using compressed air.

SERVICE PROCEDURES (Continued)

4. Coat threads of mandrel with cutting oil. Thread taperset onto mandrel until one thread of mandrel extends beyond taperset.

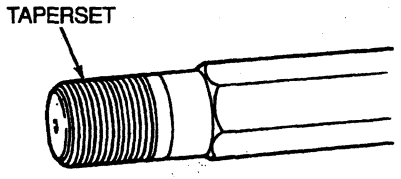

A23459-A

5. NOTE: A properly installed taperset will be flush to 1 mm below spark plug gasket seat.

   Thread taperset into tapped spark plug hole using a torque wrench. Continue tightening mandrel until torque wrench indicates 61 N·m (45 lb-ft).

6. To loosen mandrel for removal, hold mandrel stationary and turn mandrel body approximately one-half turn. Remove mandrel.

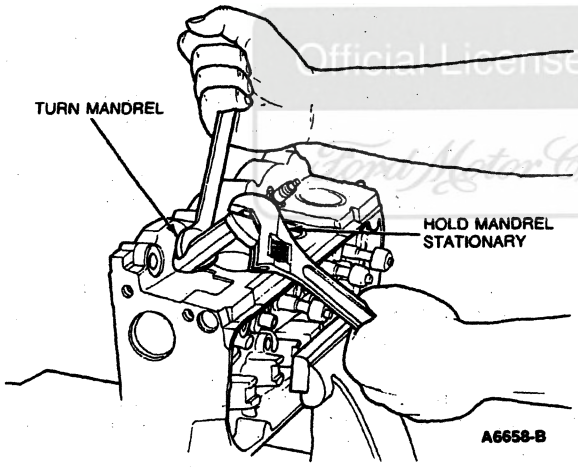

A6658-B

Cylinder Head Flatness

NOTE: Do not plane or grind off more than 0.254 mm (0.010 inch).

NOTE: The cylinder head used on the 7.3L diesel engine is not refinishable. Replacement is the only authorized service.

When a cylinder head is removed because of gasket leaks, check the flatness of the cylinder head gasket surface for conformance to specification. For specifications, refer to Section 03-01A (5.8L MFI), Section 03-01B (7.5L MFI) or Section 03-01C (7.3L diesel). If necessary, refinish the cylinder head surface.

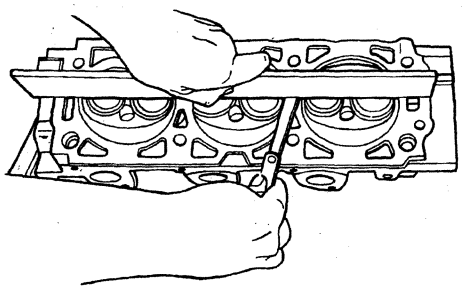

A15267-A

Valve Seat Runout

Check the valve seat runout with Valve Seat Runout Gauge. Follow the instructions of the gauge manufacturer. If the runout exceeds the wear limit, reface the valve and valve seat. For specifications, refer to the appropriate engine section.

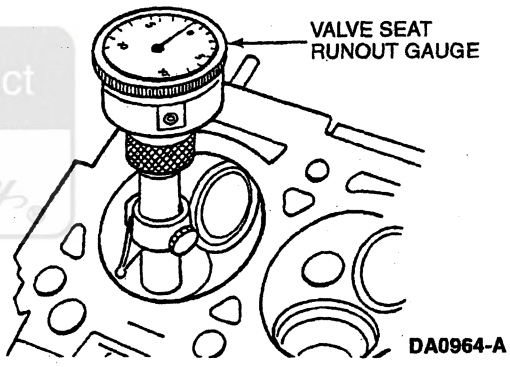

DA0964-A

Valve Stem-to-Valve Guide Clearance

1. Check the valve stem-to-valve guide clearance of each valve in its respective valve guide (6510) with Valve Stem Clearance TOOL-6505-E or equivalent. Use a flat-end indicator point.

Official Licensed Product Ford Motor Company

SERVICE PROCEDURES (Continued)

2. Install the tool on the valve stem until it is fully seated, and tighten the knurled setscrew firmly. Permit the valve to drop away from its seat until the tool contacts the upper surface of the valve guide.

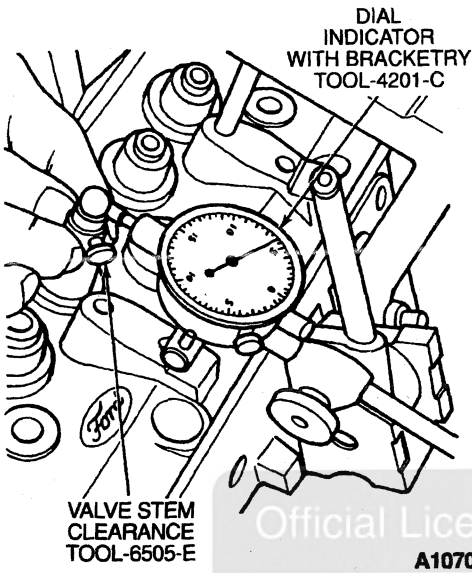

A10707-D

3. Position the dial indicator with its flat tip against the center portion of the tool's spherical section at approximately 90 degrees to the valve stem axis.
4. Move the tool back and forth in line with the indicator stem.
5. Take a reading on the dial indicator without removing the tool from the valve guide upper surface.
6. Divide the reading by 2, the division factor for the tool.
7. If valve stem-to-valve guide clearance exceeds the wear limit, ream the valve guide for the next oversize valve stem as described in this section.

Valves, Select Fitting

If the valve stem-to-valve guide clearance exceeds the service clearance, ream the valve guide for the next oversize valve stem. Valves with oversize stem diameters of 0.38 mm and 0.76 mm (0.015 inch and 0.030 inch) are available for service in diameters of 0.41 mm and 0.81 mm (0.016 inch and 0.032 inch) oversize. Always reface the valve seat after the valve guide has been reamed. Refer to Valve Guides, Reaming, in this section.

In the case of valve stem-to-valve guide clearance, the service clearance is intended as an aid to diagnosing engine noise only, and does not constitute a failure or indicate need for service. However, when overhauling or reconditioning a cylinder head, the service clearance should be regarded as a practical working value, and used as a determinant for installing the next oversize valve to make sure service life is extended.

Valve Guides, Reaming

If it becomes necessary to ream a valve guide to install a valve with an oversize stem, a hand reaming kit is available that contains the following reamer and pilot combinations: a 0.38-mm (0.015-inch) OS reamer with a 0.076-mm (0.003-inch) OS pilot, and a 0.76-mm (0.030-inch) reamer with a 0.38-mm (0.015-inch) OS pilot.

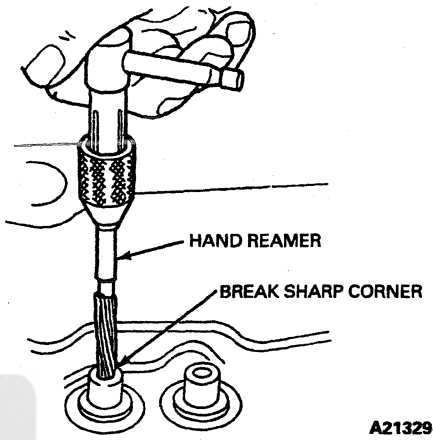

A21329-A

NOTE: If oversize valve stems and oversize stem seals are not available, bore out original valve guide and install service bushing. Ream inside diameter for specified clearance for standard size valve. Reface valve seat, as required. Install standard size valve stem oil seal.

When replacing a standard size valve with an oversize valve, always use the reamer in sequence (smallest oversize first, and then next smallest, etc.) so as not to overload the reamers.

NOTE: Always reface the valve seat after the valve guide has been reamed, and use a suitable scraper to break the sharp corner (inside diameter) at the top of the valve guide.

NOTE: The interference angle of the valve and seat should not be lapped out. Remove all grooves or score marks from the end of the valve stem, and chamfer it as necessary. Do not remove more than 0.254 mm (0.010 inch) from the end of the valve stem.

If the valve face runout is excessive or to remove pits and grooves, reface the valves to a true 45-degree angle. Remove only enough stock to correct the runout or to clean up the pits and grooves. If the edge of the valve head is less then 0.794 mm (1/32 inch) thick after grinding, replace the valve as the valve will run too hot in the engine.

If the valve or valve seat has been refaced, it will be necessary to check the clearance between the rocker arm pad and the valve stem with the valve train assembly installed in the engine.

Valve Seats, Refacing

Measure the valve seat width. Reface the valve seat(s) if the width is not within specifications. Refer to the appropriate engine section.

Official Licensed Product

SERVICE PROCEDURES (Continued)

Refer to Engine Service in the Rotunda Tool catalog for a description of the various types of valve seat grinders and cutters available.

Refacing the valve seat should be closely coordinated with the refacing of the valve face so that the finished seat and valve face will be concentric and the specified interference angle will be maintained. This is important so that the valve and seat will have a compression-tight fit. Make sure refacer grinding wheels are properly dressed.

Grind the valve seats of all cylinder heads to a true 45-degree angle. Remove only enough stock to clean up pits and grooves or to correct the valve seat runout. After the seat has been refaced, use a seat width scale or a machinist scale to measure the seat width. Narrow the seat, if necessary, to bring it within specification. For specifications, refer to Section 03-01A (5.8L MFI), Section 03-01B (7.5L MFI) or Section 03-01C (7.3L diesel).

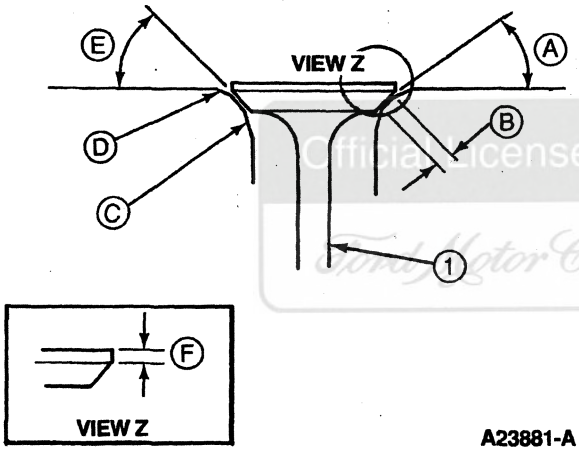

A23881-A

Item	Part Number	Description
1	6507	Intake Valve
A	—	Valve Seat Angle
B	—	Seat Width and Proper Location on Valve
C	—	Bottom Narrowing Angle 75 Degrees
D	—	Top Narrowing Angle 30 Degrees
E	—	Valve Face Angle
F	—	Valve Margin

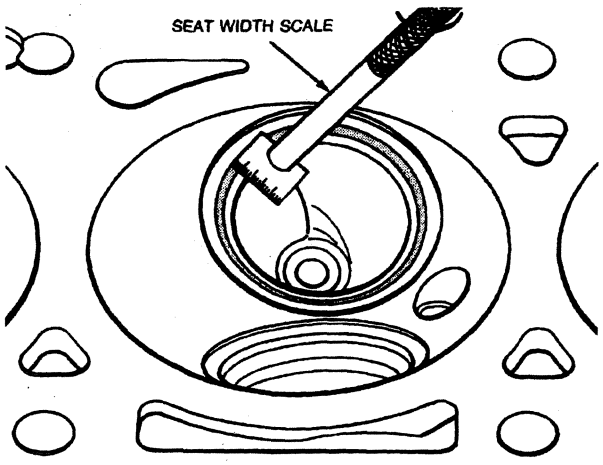

A6802-B

If the valve seat width exceeds the maximum limit, remove enough stock from the top edge or bottom edge or both edges of the seat to reduce the width to specification.

On the intake and exhaust seats, use a 60-degree angle grinding wheel to remove stock from the bottom of the seat (raise the seats). A 30-degree angle wheel is used to remove stock from the top of the seats (lower the seats).

The finished valve seat should contact the approximate center of the valve face. It is good practice to determine where the valve seat contacts the face.

To do this, coat the seat with Prussian blue and set the valve in place. Rotate the valve with light pressure. If the blue is transferred to the center of the valve face, the contact is satisfactory. If the blue is transferred to the top edge of the valve face, lower the valve seat. If the blue is transferred to the bottom edge of the valve face, raise the valve seat.

Valves

The critical inspection points and tolerances of the valve are illustrated below. Refer to Specifications in Section 03-01A (5.8L MFI), Section 03-01B (7.5L MFI) or Section 03-01C (7.3L diesel) for service limits.

Inspect the valve stem for bends, and the end of the stem for grooves or scoring.

Inspect the valve face and the edge of the valve head for pits, grooves or scores. Inspect the stem for a bend condition and the end of the stem for grooves or scores. Check the valve head for signs of burning or erosion, warpage and cracking. Minor pits, grooves, etc., may be removed. Discard severely damaged valves.

SERVICE PROCEDURES (Continued)

Inspect the valve spring assembly, valve spring retainers, locks and sleeves and discard any visually damaged parts.

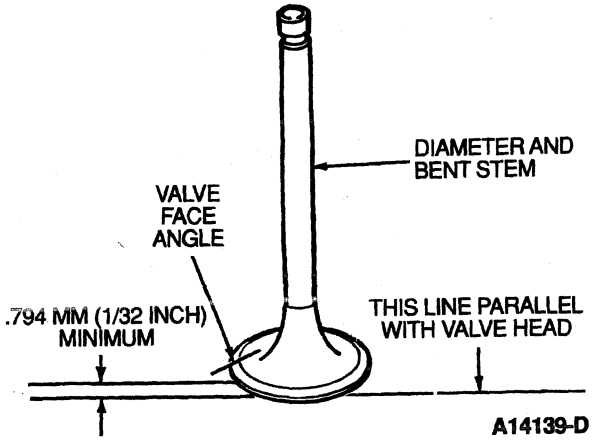

Valves, Refacing

NOTE: Discard any excessively worn or damaged valve train parts.

Minor pits or grooves can be removed. Discard valves that are severely damaged if the face runout cannot be corrected by refinishing or if stem clearance exceeds specification. Refer to the appropriate engine section for specifications.

Refer to Engine Service in the Rotunda Tool catalog for a description of the various types of valve resurfacing equipment.

The valve refacing operation should be closely coordinated with the valve seat refacing operations so that the finished angles of the valve face and valve seat will be to specifications and provide a compression-tight fit.

Make sure refacer grinding wheels are properly dressed.

Valve Spring Tension

Inspect the valve spring (6513), valve spring retainers, and keys for wear or damage. Discard any damaged parts.

Check the valve springs for proper pressure at the specified spring lengths using Valve/Clutch Spring Tester TOOL-6513-DD or equivalent. Tighten until click is heard; read torque wrench and multiply reading by two. Weak valve springs cause poor engine performance. Replace any valve spring not within specification. For specifications, refer to Section 03-01A (5.8L MFI), Section 03-01B (7.5L MFI) or Section 03-01C (7.3L diesel). Manually rotating the valve spring assemblies while installed in the engine will not determine condition of valve springs.

CAUTION: Make sure the valve springs are reassembled to their own original dampers by pushing damper on the spring. Do not open damper with any kind of tool in order to reassemble.

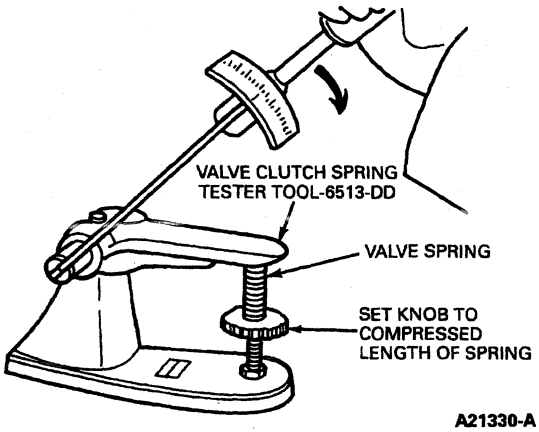

Valve Spring Squareness

Check each valve spring for squareness using a steel square and a flat surface. Stand the valve spring and square on end of the flat surface. Slide the valve spring up to the square. Revolve the valve spring slowly and observe the space between the top coil of the valve spring and the square. Refer to the illustration below.

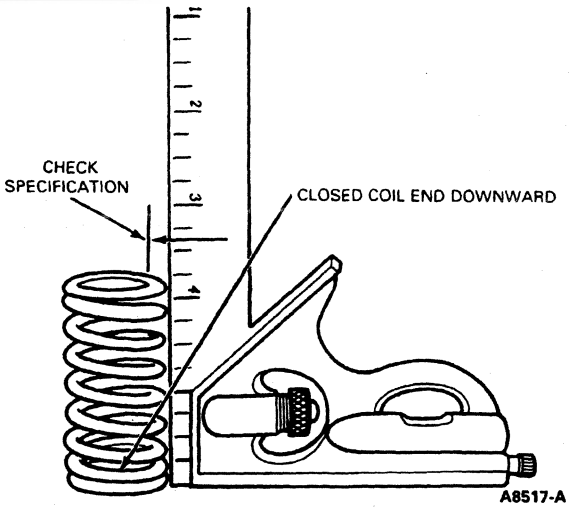

Refer to Specifications in Section 03-01A (5.8L MFI), Section 03-01B (7.5L MFI) or Section 03-01C (7.3L diesel) for out-of-square limits. Follow the same procedure to new valve springs before installation.

Make sure the proper valve spring (color-coded) is installed.

CAUTION: Make sure the valve springs are reassembled to their own original dampers by pushing damper on the valve spring. Do not open damper with any kind of tool in order to reassemble.

SERVICE PROCEDURES (Continued)

Rocker Arm

Cleaning

Clean all parts thoroughly. Make sure all oil passages are open.

Make sure oil passage in the push rod end of the rocker arm (6564) is open.

Inspection

Inspect the rocker arm seat (6A528) and the rocker arm bore for nicks, scratches, scores or scuffs. Replace any damaged parts.

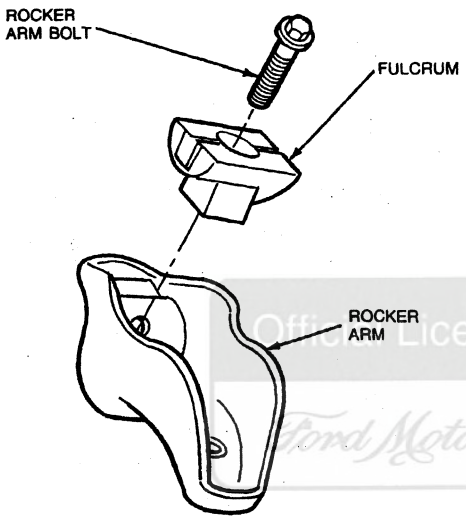

A5859-E

CAUTION: Do not attempt to true surface by grinding. On pedestal-mounted rocker arms, check the rocker arm pad, side rails and fulcrum seat for excessive wear, cracks, nicks or burrs. Check the rocker arm bolt for stripped or broken threads.

Inspect the pad at the valve end of the rocker arm for indications of scuffing or abnormal wear. If the pad is grooved, replace the rocker arm.

Push Rods

Cleaning

Clean the push rods (6565) in a suitable solvent. Blow out the oil passage in the push rods with compressed air.

Inspection

NOTE: Do not attempt to straighten push rods.

Check the ends of the push rods for nicks, grooves, roughness or excessive wear. Replace damaged push rods.

The push rods can be visually checked for straightness while they are installed in the engine (6007) by rotating them with the valve closed. They also can be checked with a dial indicator.

If the push rod is bent beyond specifications, it should be replaced.

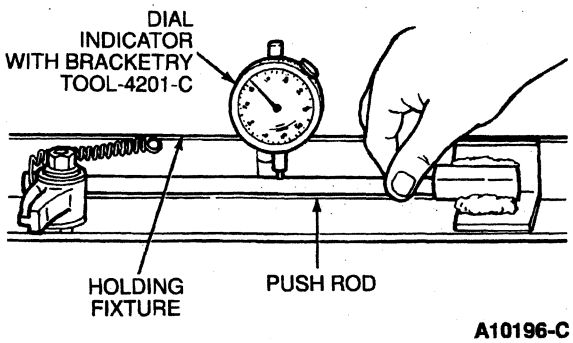

A10196-C

Intake Manifold

Cleaning

Remove all gasket material from the machined surfaces of the upper and lower intake manifolds. Clean the manifolds in a suitable solvent and dry with compressed air.

Inspection

NOTE: Remove all filings and foreign matter that may have entered the manifold as a result of service.

Inspect the manifold for cracks, damaged gasket surfaces, or other problems that would make it unfit for further service. Replace all studs that are stripped or otherwise damaged. Clean the EGR exhaust passages.

Check the baffle plate(s) on the underside of the manifold if so equipped. The baffle(s) should be securely fastened.

Exhaust Manifold

Cleaning

Remove all gasket or foreign material, if so equipped, from all inlet and outlet sealing surfaces of the manifolds.

Inspection

Inspect the cylinder head joining flanges of the exhaust manifold for evidence of exhaust gas leaks.

Inspect the manifold for cracks, damaged gasket surfaces, or other damage that would make them unfit for further service. Warped or cracked exhaust manifolds must be replaced.

Official Licensed Product Ford Motor Company

SERVICE PROCEDURES (Continued)

Flywheel Inspection

Transmission, Automatic

Inspection

Inspect the flywheel (6375) for cracks or other damage that would make it unfit for further service. Inspect the flywheel ring gear for worn, chipped or cracked teeth. If the teeth are damaged, replace the ring gear and flywheel assembly.

With the flywheel installed on the crankshaft (6303), check the gear face runout.

Transmission, Manual

Inspection

Inspect the flywheel ring gear (6384) for worn, chipped or cracked teeth. If the teeth are damaged, replace the flywheel ring gear.

Flywheel Clutch Surface Machining

Inspect the flywheel (6375) for cracks, heat check, or other damage that would make it unfit for further use. Acceptable flywheels may be repaired by polishing with fine grade (400 grit) sandpaper. Flywheels may be resurfaced to remove scratches or grooves. After resurfacing, the flywheel thicknesses must not be less than the dimensions noted in the chart in Specifications portion of this section.

- Mount flywheel rigidly on crankshaft mounting flange.
- After machining:
  - — Surface runout must not exceed 0.13 mm (0.005 inch) TIR; surface finish must be in the range of 4.0 / 1.3 micrometer (160 / 52 microinch).
  - — Major diameter of dowel pin (press-fit diameter) must not extend above the new surface.
  - — The clutch pressure plate retaining bolts must screw into the flywheel under hand torque to within 1.50 mm (0.06 inch) of new surface.
  - — Flywheels with dimensions less than the charted dimensions must not be used; install new service flywheel.

Dimension A is the minimum acceptable dimension from the crankshaft mounting surface to the new resurfaced clutch face surface. Dimension B is a referenced minimum acceptable dimension for the overall width of the outer flange.

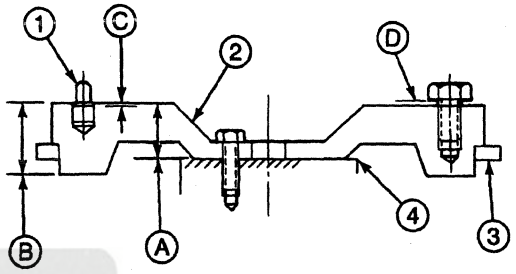

A15182-B

Item	Part Number	Description
1	—	Dowel Pin (Part of 6375)
2	6375	Flywheel
3	—	Ring Gear (Part of 6375)
4	6303	Crankshaft
A	—	Dimension A
B	—	Dimension B
C	—	Dowel Pin Height
D	—	Pressure Plate Bolt Height

Officially Licensed Product Ford Motor Company

SPECIFICATIONS

NOTE: For specific engine specifications, refer to Section 03-01A (5.8L MFI), Section 03-01B (7.5L MFI) or Section 03-01C (7.3L diesel).

GENERAL ENGINE SPECIFICATIONS

Item	Dimension
Normal Engine Vacuum at Idle	-51 to -74 kPa (15-22 in-Hg)
Maximum Allowable Timing Chain Deflection (5.8L and 7.5L)	3.175 mm (0.12 In.)
Cylinder Block Cylinder Head Deck Flatness — Maximum Variation	0.076 mm (0.003 In.) over 152 mm (6 In.) 0.152 mm (0.006 In.) Overall
Cylinder Block Bearing Bore Alignment — Maximum Variation	0.076 mm (0.003 In.)
Cylinder Block Flywheel Housing Flange Flatness — Maximum Variation	0.076 mm (0.003 In.)

(Continued)

SPECIFICATIONS (Continued)

GENERAL ENGINE SPECIFICATIONS (Cont'd)

Item	Dimension
Maximum Allowable Cylinder Bore Taper	0.127 mm (0.005 In.)
Maximum Allowable Cylinder Bore Out-of-Round	0.127 mm (0.005 In.)
Measuring Point for Piston Diameter — Below Oil Ring Groove	16.5 mm (0.650 In.)
Required Oil Clearance — Journal to Main Bearing	
5.8L	0.020-0.066 mm (0.0008-0.0026 In.)
7.3L Diesel	0.046-0.0914 mm (0.0018-0.0036 In.)
7.5L	0.023-0.064 mm (0.0009-0.0027 In.)
Maximum Allowable Crankshaft Runout	0.076 mm (0.003 In.)
Maximum Oil Pump Cover Flatness Variation	0.038 mm (0.0015 In.)
Oil Pump Rotor Clearance	0.10 mm (0.004 In.)
Minimum Engine Valve Margin	0.794 mm (1/32 In.)
Maximum Allowable Camshaft Runout	0.03 mm (0.0012 In.)

TORQUE SPECIFICATIONS

Description	N·m	Lb-Ft
Oil Pump Screen Cover and Tube	14-20	11-15

LUBRICANT/ADHESIVE/CLEANER SPECIFICATIONS

Description	Part Number	Ford Specification
Stud and Bearing Mount	EOAZ-19554-BA	WSK-M2G349-1
Threadlock® 262	E2FZ-19554-B	WSK-M2G351-A6

Official Licensed Product
Ford Motor Company

Flywheel Dimensions

Flywheel Part Number	Dimension A mm (Inches)	Dimension B mm (Inches)
E3TZ-6375-A	25.95 (1.02)	28.45 (1.12)
E69Z-6375-B	28.18 (1.10)	28.85 (1.14)

SPECIAL SERVICE TOOLS/EQUIPMENT

SPECIAL SERVICE TOOLS REQUIRED

Tool Number/ Description	Illustration
T50T-100-A Impact Slide Hammer	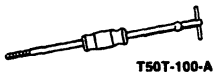 T50T-100-A
T59L-100-B Impact Slide Hammer	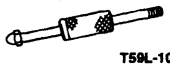 T59L-100-B

(Continued)

SPECIAL SERVICE TOOLS REQUIRED (Cont'd)

Tool Number/ Description	Illustration
T73L-6011-A Engine Cylinder Hone Set	T73L-6011-A
T73L-6600-A Engine Oil Pressure Gauge	T73L-6600-A

SPECIAL SERVICE TOOLS/EQUIPMENT (Continued)

SPECIAL SERVICE TOOLS DESIRED

Tool Number	Description
D81L-6002-B	Plastigage®
D81P-6002-E	Valve Seat Runout Gauge
D83L-4201-A	Straightedge
D87C-77000-A	Transmission Test Adapter
TOOL-4201-C	Dial Indicator with Bracketry
TOOL-6505-E	Valve Stem Clearance Tool
TOOL-6513-DD	Valve/Clutch Spring Tester
TOOL-6565-AB	Cup Shaped Adapter

ROTUNDA EQUIPMENT

Model	Description
014-00705	Pressurization Kit
107-R0921	Thread Repair Kit
014-00707	Compression Tester
164-R0253	Vacuum/Pressure Tester
164-R0756	Oil Leak Detector Kit
164-R3705	Gas Engine Oil Dye

Official Licensed Product
Ford Motor Company

SECTION 03-01A Engine, 5.8L MFI

SUBJECT	PAGE
VEHICLE APPLICATION	03-01A-1
DESCRIPTION AND OPERATION	
Camshaft	03-01A-3
Crankshaft	03-01A-3
Drive Belt System	03-01A-4
Emission Calibration Label	03-01A-2
Engine	03-01A-1
Engine Code Information	03-01A-2
Engine Cooling System	03-01A-4
Engine Identification	03-01A-2
Engine Lubrication System	03-01A-4
Oil Pan	03-01A-4
Oil Pump	03-01A-4
Exhaust Emission Control System	03-01A-3
Induction System	03-01A-3
Positive Crankcase Ventilation System	03-01A-3
Valve Train	03-01A-3
IN-VEHICLE SERVICE	
Camshaft	03-01A-22
Camshaft Rear Bearing Cover	03-01A-34
Connecting Rod Bearings	03-01A-32
Crankshaft Main Bearings	03-01A-28
Crankshaft Pulley Damper/Crankshaft Front Seal	03-01A-19
Crankshaft Rear Oil Seal	03-01A-33
Cylinder Head(s)	03-01A-17
Engine Components	03-01A-4
Engine Front Cover	03-01A-20
Exhaust Manifolds, Right and Left	03-01A-23
Flywheel	03-01A-32
Intake Manifold, Lower	03-01A-14
Intake Manifold, Upper	03-01A-13
Oil Filter/Adapter/Oil Cooler	03-01A-34
Oil Level Indicator Tube	03-01A-34

SUBJECT	PAGE
IN-VEHICLE SERVICE (Cont'd.)	
Oil Pan/Oil Pump Screen Cover and Tube	03-01A-25
Oil Pump	03-01A-27
Pistons and Connecting Rods	03-01A-30
Rocker Arm	03-01A-11
Sensor, Oil Pressure Sender/Switch	03-01A-35
Timing Chains and Sprockets	03-01A-21
Valve Cover and Gasket	03-01A-9
Left Side Valve Cover	03-01A-9
Right Side Valve Cover	03-01A-10
Valve Spring, Retainer and Valve Stem Seal	03-01A-11
Valve Tappet, Hydraulic	03-01A-12
Water Pump	03-01A-19
REMOVAL AND INSTALLATION	
Camshaft Bearings	03-01A-36
Crankshaft	03-01A-37
Engine	03-01A-35
DISASSEMBLY AND ASSEMBLY	
Engine	03-01A-39
Subassemblies	03-01A-46
Cylinder Block Assembly	03-01A-51
Cylinder Block, Bare	03-01A-51
Cylinder Head	03-01A-46
Oil Pump	03-01A-50
Pistons, Piston Pins and Rings	03-01A-47
Valve Tappet, Hydraulic	03-01A-51
ADJUSTMENTS	
Valve Clearance	03-01A-52
SPECIFICATIONS	
General Specifications	03-01A-53
SPECIAL SERVICE TOOLS/EQUIPMENT	03-01A-58

VEHICLE APPLICATION

F-250, F-350

DESCRIPTION AND OPERATION

Engine

The cylinder block for the 5.8L (351 CID) V-8 engine (6007) is of special high-grade cast iron, thin-wall construction. The crankshaft (6303) has five main bearings and is precision-cast nodular iron. Pistons (6108) are aluminum alloy, tin plated. Valve rocker arms (6564) are individually bolt-mounted. The valve tappets (6500) are hydraulic. These engines are also equipped with aluminum intake manifold systems.

DESCRIPTION AND OPERATION (Continued)

5.8L Engine

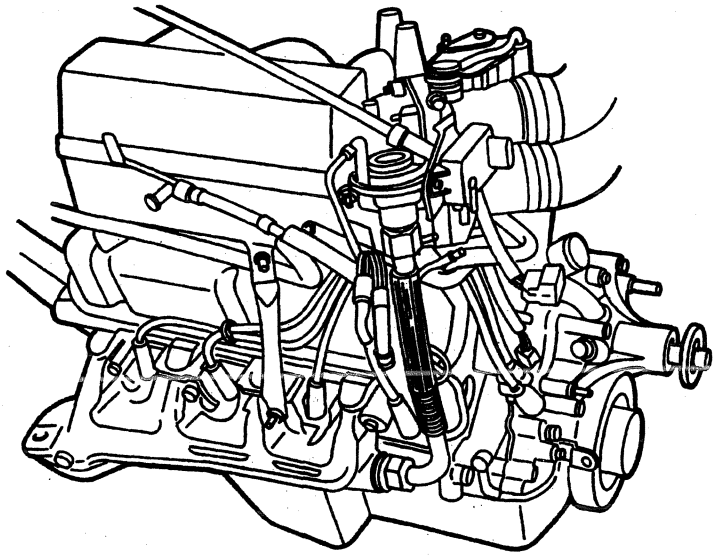

A24890-A

Engine Identification

For quick engine identification, refer to the Safety Certification Decal.

- The decal is mounted on the LH front door lock face panel.
- An engine identification label is also attached to the engine (6007).

Engine Code Information

The engine code information label, located on the side of the left valve cover (6582), contains the engine build date, engine plant code, the engine code, and the initial distributor timing.

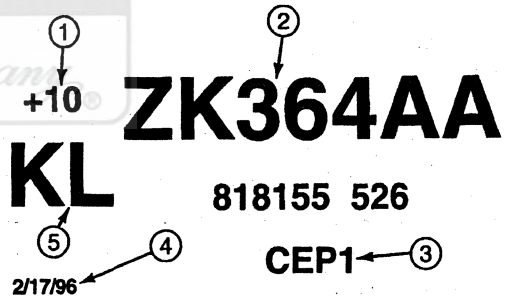

A24891-A

Item	Part Number	Description
1	—	Initial Distributor Timing
2	—	Engine Code
3	—	Engine Plant Code — Cleveland Engine Plant One
4	—	Engine Build Date
5	—	Serial Number Identification

Emission Calibration Label

The emission calibration number label is located on the left side door or left door post pillar. It identifies the engine calibration number and revision level.

These numbers are used to determine if parts are unique to specific engines (6007).

Official Licensed Product
Ford Motor Company

DESCRIPTION AND OPERATION (Continued)

NOTE: It is critical that the engine codes and the calibration number be used when ordering parts or making inquiries about the engine.

CALIBRATION
ÉTALONNAGE
CALIBRACIÓN

A10693-C

Exhaust Emission Control System

Operation and required maintenance of the exhaust emission control devices used on these engines (6007) are covered in the Powertrain Control / Emissions Diagnosis Manual.[1]

Induction System

The fuel / air mixture needed for burning in the cylinders is provided by sequential fuel injection (SFI) or multiport fuel injection (MFI).

Fuel is metered into the air intake stream in accordance with engine demand by eight solenoid injection valves mounted in the lower intake manifold (9424).

Fuel is supplied from the vehicle's fuel tank by a high-pressure electric fuel pump (9350) mounted in the fuel tank. The fuel is filtered and sent to the fuel injection supply manifold (9F792). A fuel pressure regulator (9C968) on this fuel injection supply manifold (9D280) controls the fuel delivery pressure at a constant 269 kPa (39 psi). The eight fuel injectors are mounted above each intake runner and are connected in parallel with the fuel pressure regulator. Excess fuel supplied by the fuel pump, but not needed by the engine, is returned to the vehicle fuel tank by a fuel return line.

These fuel induction systems are mounted on an intake manifold which in turn is bolted to cast iron cylinder heads.

Crankshaft

The crankshaft (6303) is supported on the bottom of the cylinder blocks (6010) by five steel-backed, over-plated, copper-lead crankshaft main bearings (6333). The No. 3 bearing insert limits crankshaft end play and absorbs thrust loads applied to the crankshaft ends.

Camshaft

The camshaft is installed in the cylinder block and is supported on five babbit-lined bearing inserts. Thrust loads and end play, however, are limited by a camshaft thrust plate (6269) installed at the front of the camshaft.

Valve Train

A hydraulic roller valve tappet (6500), providing automatic lash adjustment, rides on a camshaft lobe and transfers its up-and-down motion to the rocker arm (6564) through a push rod (6565). Rotation of the hydraulic roller valve tappets is prevented by the valve tappet guide plate (6K512) and valve tappet guide plate retainer (6C515). The rocker arms are pedestal-mounted and pivot on rocker arm seats (6A528) bolted to the cylinder head (6049). The valves are arranged alternately intake valve (6507) exhaust valve (6505).

Positive Crankcase Ventilation System

These engines are equipped with a positive closed-type crankcase ventilation system directing the crankcase vapors to the intake manifold (9424) for combustion.

1 Can be purchased as a separate item.

Official Licensed Product Ford Motor Company

DESCRIPTION AND OPERATION (Continued)

Engine Lubrication System

The engine lubrication system is of the force-feed type in which oil is supplied under full pressure to the crankshaft (6303) and connecting rod bearings (6211), valve tappets (6500) and camshaft bearings (6261). From the valve tappets, a controlled volume of oil is supplied to the rocker arms (6564) through hollow push rods (6565). All other moving parts are lubricated by gravity flow or splash.

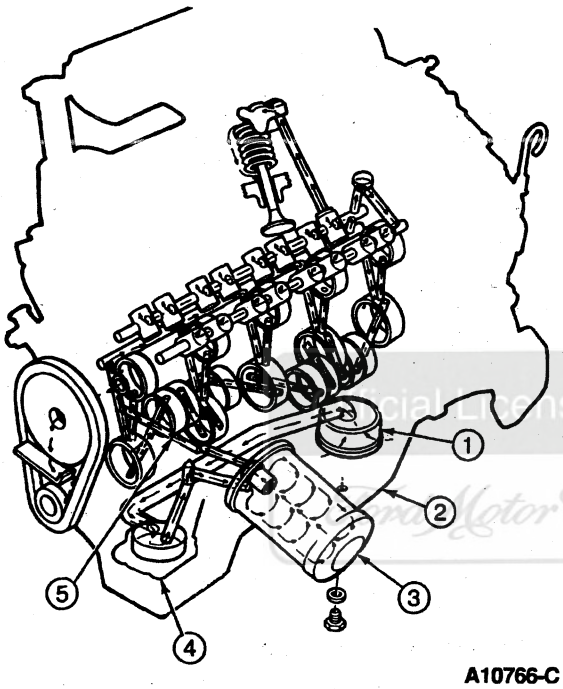

A10766-C

Item	Part Number	Description
1	6622	Oil Pump Screen Cover and Tube
2	6675	Oil Pan
3	6714	Oil Filter
4	6600	Oil Pump
5	9278	Oil Pressure Sensor

Oil Pump

The heart of the lubrication system is a full-pressure aluminum pump. The high capacity G-rotor pump is driven by an oil pump intermediate shaft (6A618) from the distributor. The pressure is relief-valve controlled.

Oil Pan

The oil pan is a stamped-steel part that bolts to the bottom of the engine front cover and cylinder blocks (6010).

The oil pan (6675) acts as a reservoir, holding lubrication that is pumped through the engine (6007) by the oil pump after start-up.

Engine Cooling System

The engine cooling system includes a radiator (8005), water thermostat, water pump (8501) and a cooling fan. Also included in the cooling system is a separate radiator coolant recovery reservoir (8A080) located beside the radiator, which aids in maintaining the correct volume of coolant.

The water pump is of a conventional design and is driven by the drive belt (8620).

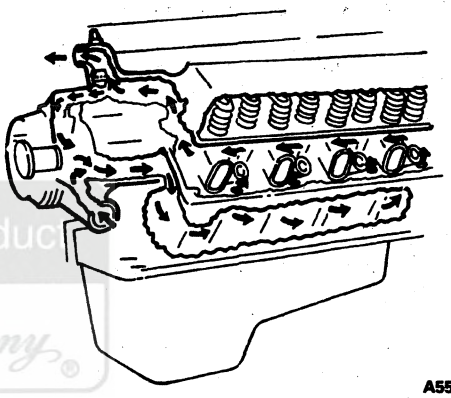

A5505-B

Drive Belt System

Accessories mounted on the front of the engine (6007) are belt-driven by the crankshaft (6303). A serpentine drive belt (8620) is routed over each accessory pulley and is driven by a crankshaft pulley (6312) bolted to the crankshaft vibration damper / pulse ring. The drive belt is held tight against the drive pulleys by an idler pulley attached to a tensioner mounted on the right side of the engine. For service procedures, including tensioning, refer to Section 03-05.

IN-VEHICLE SERVICE

Engine Components

Engine components shown are typical and provide a reference for procedures.

IN-VEHICLE SERVICE (Continued)

External Engine Components

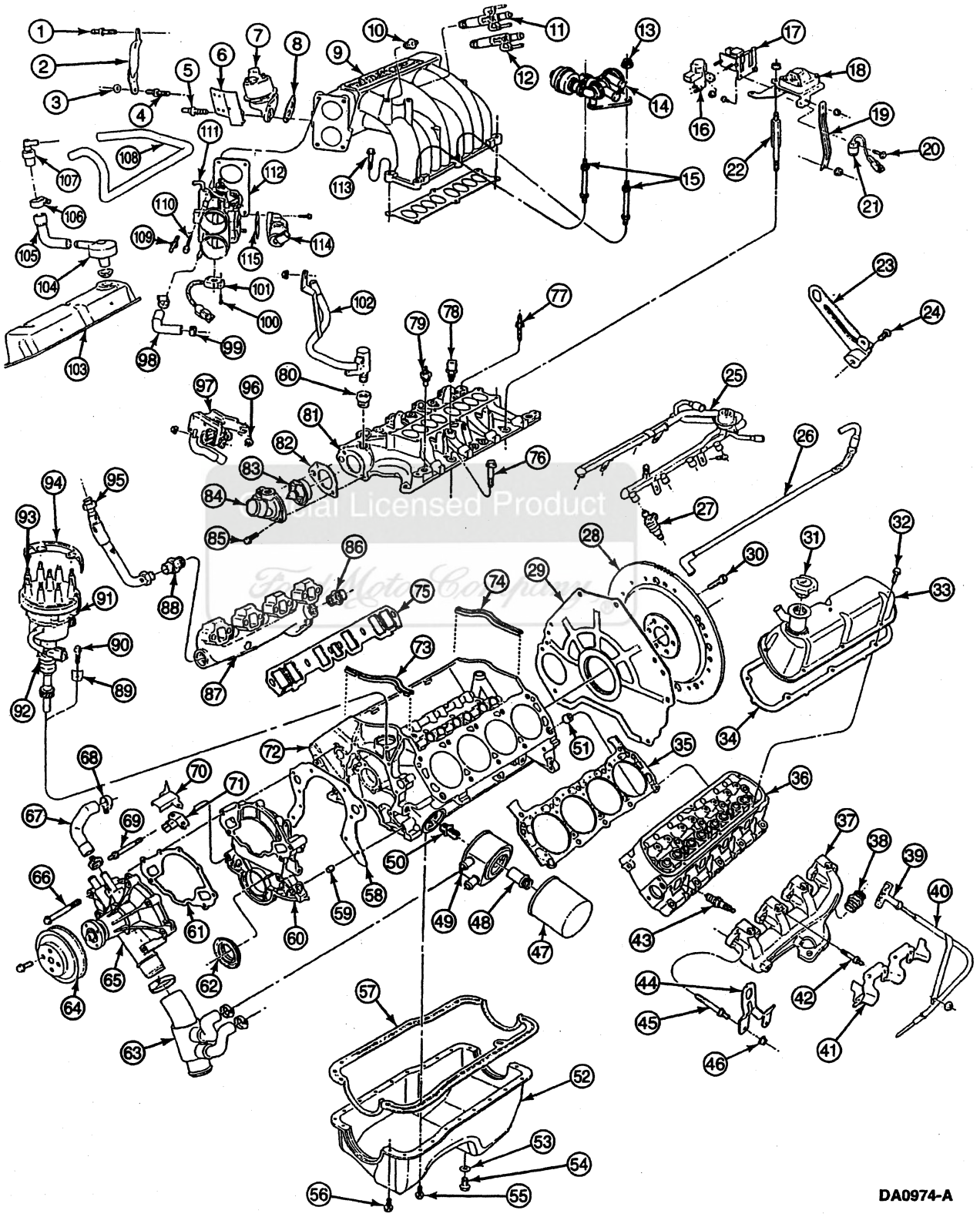

Ford Motor Company Digital Licensed Product

IN-VEHICLE SERVICE (Continued)

Item	Part Number	Description
1	390773-S36	Stud
2	9J444	Intake Manifold Support
3	383745	Nut
4	388469	Stud
5	390704-S2	Stud (49 States Only)
6	14A163	Wiring Harness Retainer (49 States Only)
7	9F483	EGR External Pressure Valve (49 States Only)
8	9D476	EGR Valve Gasket
9	9424	Intake Manifold (Upper)
10	9A474	Intake Manifold Vacuum Outlet Fitting and Cap
11	9A474	Intake Manifold Vacuum Outlet Fitting and Cap (49 States)
12	9A474	Intake Manifold Vacuum Outlet Fitting and Cap (California)
13	34657	Nut
14	9S445	Thermactor Assy
15	—	Stud
16	9J459	EGR Vacuum Regulator Solenoid
17	9S448	Secondary Air Injection Vacuum Regulator Solenoid (49 States Only)
18	12A310	Coil
19	12N004	Ignition Coil Mounting Bracket
20	40904-S36	Screw and Washer Assembly
21	18801	Radio Ignition Interference Capacitor
22	390948-S36	Stud
23	17A084	Engine Lifting Eye
24	56359	Screw and Washer Assembly
25	9F792	Fuel Injection Supply Manifold
26	9G271	Evaporative Emission Return Tube
27	9E527	Fuel Injector Nozzle Tip
28	6375	Flywheel
29	7007	Engine Rear Plate
30	390453	Bolt
31	6766	Oil Filler Cap
32	387549	Bolt
33	6582	Valve Cover (LH)
34	6584	Valve Cover Gasket
35	6051	Head Gasket
36	6049	Cylinder Head

(Continued)

Item	Part Number	Description
37	9430	Exhaust Manifold (LH)
38	9F485	EGR Valve Tube to Manifold Connector (49 States)
39	6750	Oil Level Dipstick
40	6754	Oil Level Indicator Tube
41	12A406	Spark Plug Heat Shield
42	388469	Stud
43	12405	Spark Plug
44	17A084	Engine Lifting Eye
45	388469	Stud
46	45358	Nut
47	6714	Oil Filter
48	6L626	Oil Cooler Mounting Bolt Insert
49	6A642	Oil Cooler
50	6890	Oil Filter Mounting Insert
51	6A008	Cylinder Head to Block Dowel
52	6675	Oil Pan
53	6734	Oil Pan Drain Plug Gasket
54	6730	Oil Pan Drain Plug
55	391496	Bolt
56	391495	Bolt
57	6710	Oil Pan Gasket
58	6020	Engine Front Cover Gasket
59	388192-S	Bushing
60	6019	Engine Front Cover
61	8507	Water Pump Housing Gasket
62	6700	Crankshaft Front Seal
63	6K471	Oil Cooler Adapter
64	8509	Water Pump Pulley
65	8501	Water Pump
66	388895-S2	Bolt
67	8555	Water Bypass Tube
68	383522-S102	Clamp
69	388522-S8	Stud
70	6C351	Timing Pointer
71	6C365	Misfire Sensor
72	6010	Cylinder Blocks
73	9A425	Manifold Seal (Front)
74	9A424	Manifold Seal (Rear)
75	9439	Intake Manifold Gasket
76	388058	Bolt
77	391445	Stud
78	12A697	Intake Air Temperature Sensor (49 States, over 3864 kg [8500 Lb] GVW)
79	10884	Water Temperature Indicator Sender Unit (Lower)

(Continued)

Ford Licensed Product Ford Motor Company

IN-VEHICLE SERVICE (Continued)

Item	Part Number	Description
80	9N347	Fitting
81	9424	Intake Manifold
82	6N789	Water Outlet Connector Gasket
83	8575	Water Thermostat
84	8592	Water Hose Connection
85	56535	Bolt
86	9F485	EGR Valve Tube to Manifold Connector (49 States, over 3864 kg [8500 Lbs.] GVW)
87	9430	Exhaust Manifold (RH)
88	9F485	EGR Valve Tube to Manifold Connector
89	12270	Hold-Down Clamp
90	42955	Bolt
91	12A217	Distributor Base Adapter
92	12127	Distributor
93	12106	Distributor Cap
94	9471	Intake Manifold Shield
95	9D477	EGR Tube (49 States, Over 3864 kg [8500 Lbs.] GVW)
96	379930-S2	Nut

(Continued)

Item	Part Number	Description
97	9J433	EGR Transducer
98	381222	Elbow
99	N807714	Clamp
100	N803851-S52	Screw
101	9B989	Throttle Position Sensor
102	18472	Heater Water Hose
103	6768	Crankcase Vent Filter (RH)
104	6582	Valve Cover (RH)
105	6A664	Oil Separator Hose
106	389772-S	Clamp
107	6A666	Positive Crankcase Ventilation Valve
108	6A664	Hose
109	390589-S2	Stud (California)
110	391136-S8	Bolt (49 States)
111	9E926	Throttle Body
112	9E936	Throttle Body Gasket
113	390358-S8	Bolt
114	9F715	Idle Air Control Valve
115	9F670	Idle Air Control Gasket

Ford Motor Company

IN-VEHICLE SERVICE (Continued)

Internal Engine Components

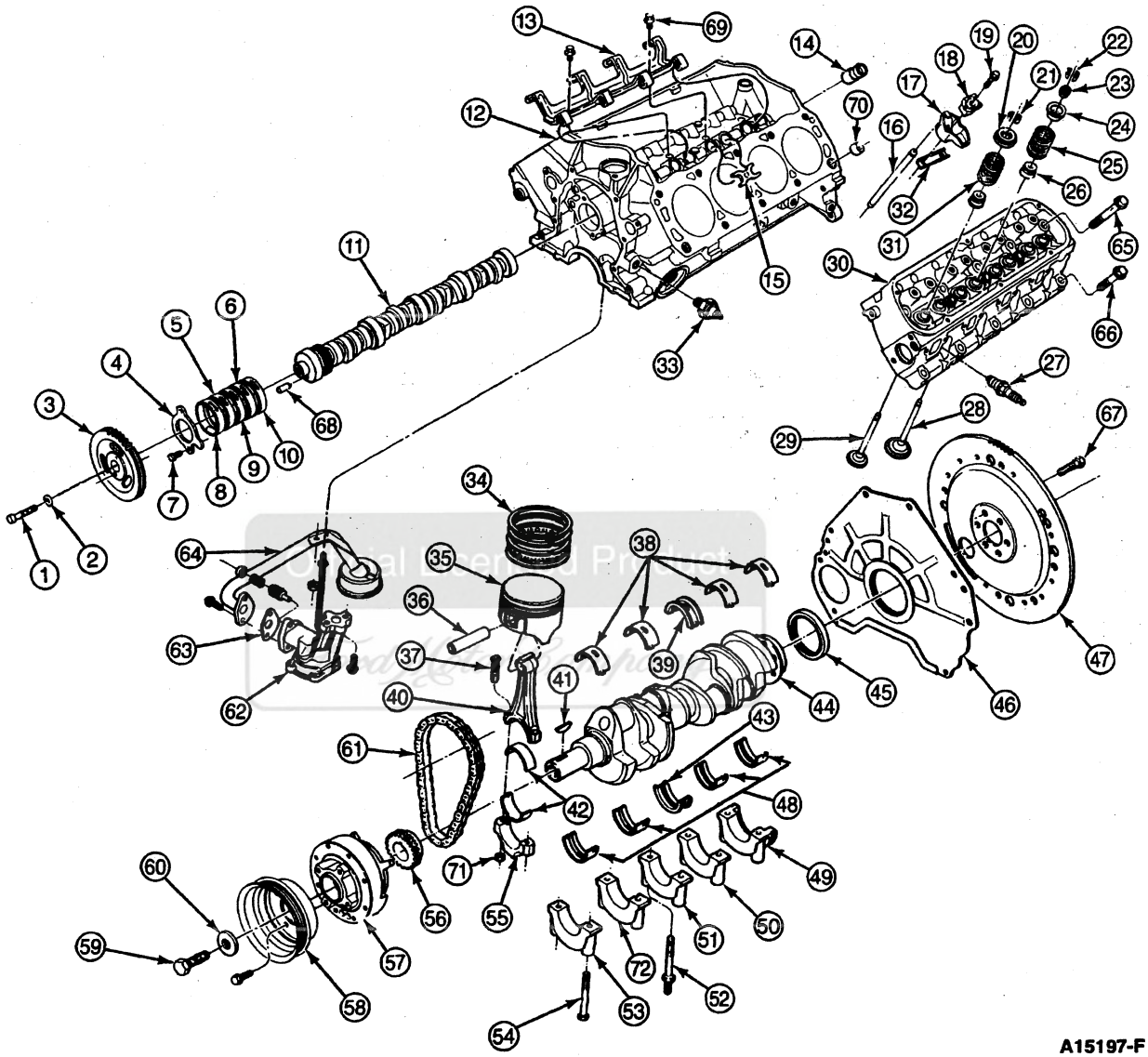

A15197-F

Item	Part Number	Description
1	43002	Bolt
2	6278	Camshaft Sprocket Washer
3	6256	Camshaft Sprocket
4	6269	Camshaft Thrust Plate
5	6262	Camshaft Center Bearing
6	6270	Camshaft Rear Intermediate Bearing
7	390392	Bolt — Camshaft Thrust Plate
8	6261	Camshaft Bearing

(Continued)

Item	Part Number	Description
9	6262	Camshaft Center Bearing
10	6263	Camshaft Rear Bearing
11	6250	Camshaft
12	6010	Cylinder Blocks
13	6C515	Valve Tappet Guide Plate Retainer
14	6500	Valve Tappet
15	6K512	Valve Tappet Guide Plate (8 Places)
16	6565	Push Rod

(Continued)

IN-VEHICLE SERVICE (Continued)

Item	Part Number	Description
17	6564	Rocker Arm
18	6A528	Rocker Arm Seat
19	390385	Rocker Arm Bolt
20	6514	Valve Spring Retainer (Exhaust)
21	6518	Valve Spring Retainer Key (Exhaust)
22	6518	Valve Spring Retainer Key (Intake)
23	6517	Valve Spring Retainer Sleeve
24	6514	Valve Spring Retainer (Intake)
25	6513	Valve Spring
26	6751	Valve Stem Seal
27	12405	Spark Plug
28	6507	Intake Valve
29	6505	Exhaust Valve
30	6049	Cylinder Head
31	6513	Valve Spring
32	6A588	Rocker Arm Fulcrum Guide
33	9278	Oil Pressure Sensor
34	6148	Partial Piston Ring Set
35	6102	Piston, Pin and Ring
36	6135	Piston Pin
37	6214	Connecting Rod Bolt
38	6333	Crankshaft Main Bearing
39	6337	Crankshaft Thrust Main Bearing
40	6200	Connecting Rod
41	N806201-S	Key — Woodruff
42	6211	Connecting Rod Bearing
43	6337	Crankshaft Thrust Main Bearing
44	6300	Crankshaft Assembly

(Continued)

Item	Part Number	Description
45	6701	Crankshaft Rear Oil Seal
46	7007	Engine Rear Plate
47	6375	Flywheel
48	6333	Crankshaft Main Bearing
49	6325	Cap — Main Bearing
50	6327	Cap — Main Bearing
51	6330	Cap — Main Bearing
52	387239	Stud, 3/8-16-1/2-13 x 4.70 (1 Req'd)
53	6329	Cap — Main Bearing
54	391285	Bolt — Crankshaft Main Bearing Cap (9 Req'd)
55	6210	Cap — Main Bearing
56	6306	Crankshaft Sprocket
57	6316	Damper Assembly / Pulse Ring — Crankshaft
58	6312	Crankshaft Pulley
59	376706	Bolt
60	6378	Crankshaft Pulley Retaining Washer
61	6268	Timing Chain / Belt
62	6600	Oil Pump
63	6626	Oil Pump Inlet Tube Gasket
64	6622	Oil Pump Screen Cover and Tube
65	391279	Bolt, 1/2-13 x 4 (10 Req'd)
66	391280	Bolt, 1/2-13 x 2.5 (10 Req'd)
67	390453	Bolt
68	384940	Bushing
69	57621	Screw
70	6A008	Bushing
71	6212	Connecting Rod Nut
72	6334	Cap — Main Bearing

Ford Licensed Product

Valve Cover and Gasket

SPECIAL SERVICE TOOL(S) REQUIRED

Description	Tool Number
Spark Plug Wire Remover	T74P-6666-A

Left Side Valve Cover

Removal

1. Remove air cleaner outlet tube (9B659).
2. Remove crankcase ventilation tube (6758) from valve cover.
3. If equipped with air conditioning, remove serpentine drive belt (8620) and compressor-to-bracket bolts and position out of way.
4. Remove engine lifting eye (17A084) from exhaust manifold.
5. Remove nut for oil level indicator tube (6754) from exhaust manifold.
6. Disconnect radio ignition interference capacitor (18801), electrical connector and coil wire from coil.
7. Disconnect electrical connector and vacuum harness from EGR vacuum regulator solenoid (9J459).

IN-VEHICLE SERVICE (Continued)

8. Disconnect electrical connector and vacuum harness from secondary air injection vacuum regulator solenoid (9S448).
9. Remove nut from ignition coil mounting bracket to exhaust manifold stud and two nuts for coil mounting bracket and remove coil and bracket.
10. Disconnect brake booster vacuum line from intake manifold vacuum tree.
11. Disconnect spark plug wires from spark plugs (12405) by grasping, twisting and pulling the molded cap using Spark Plug Wire Remover T74P-6666-A. Position wires out of way.

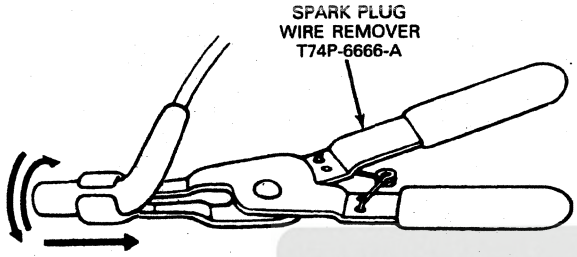

TWIST AND PULL

B3496-E

12. Unclip spark plug wires from valve cover and position wires out of way.
13. Remove clips securing wiring harness to valve cover and position wiring harness out of way.
14. Remove valve cover attaching bolts and remove valve cover.

Installation

1. **CAUTION: Do not use solutions such as brake cleaner, carburetor cleaner, etc., as these solutions can leave a residue on the machined surfaces. Use only a cleaner which meets or exceeds Ford specification WSE-M5B392-A, such as Metal Surface Cleaner F4AZ-19A536-RA or equivalent.**

   NOTE: Be sure to position gasket so that chamfered edge and stamping are facing up.

   Clean and inspect gasket surfaces. Inspect the gasket sealing surface for damage and distortion due to overtightening of the bolts. Service and straighten as required. Place the new valve cover gaskets (6584) on the cylinder head sealing surface.

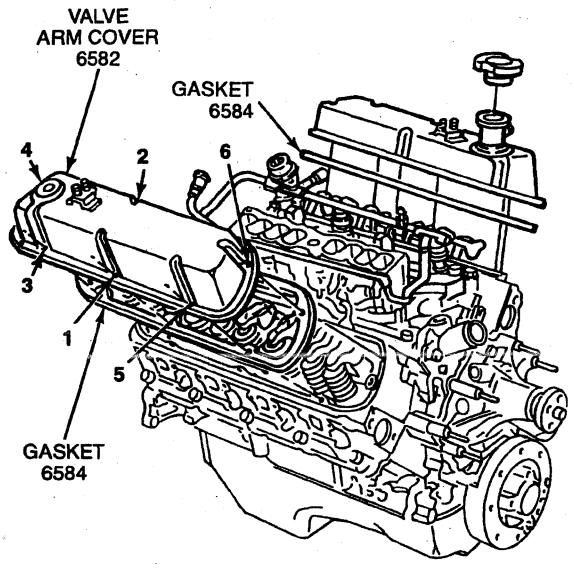

VALVE COVER TIGHTENING SEQUENCE

A24894-A

2. Follow removal procedure in reverse order. Tighten valve cover attaching bolts to 16-20 N·m (12-15 lb-ft).
3. To install serpentine drive belt, refer to belt routing decal.

Right Side Valve Cover

Removal

1. Remove upper intake manifold (9424). Refer to Intake Manifold, Upper in the In-Vehicle Service portion of this section.
2. Remove positive crankcase ventilation valve (PCV valve)(6A666) from valve cover.
3. Remove clips securing wiring harness to valve cover and position wiring harness out of way.
4. Disconnect spark plug wires from spark plugs by grasping, twisting and pulling the molded cup using Spark Plug Wire Remover T74P-6666-A.
5. Unclip spark plug wires from valve cover and position wires out of way.
6. Remove valve cover attaching bolts and remove valve cover.

Official Licensed Product
Ford Motor Company

IN-VEHICLE SERVICE (Continued)

Installation

1. **CAUTION: Do not use solutions such as brake cleaner, carburetor cleaner, etc., as these solutions can leave a residue on the machined surfaces. Use only a cleaner which meets or exceeds Ford specification WSE-M5B392-A, such as Metal Surface Cleaner F4AZ-19A536-RA or equivalent.**

   NOTE: Be sure to position gasket so that chamfered edges and stamping are facing up.

   Clean and inspect gasket surfaces. Inspect the gasket sealing surface for damage and distortion due to overtightening of the bolts. Service and straighten as required. Place the new valve cover gaskets on the cylinder head sealing surface.

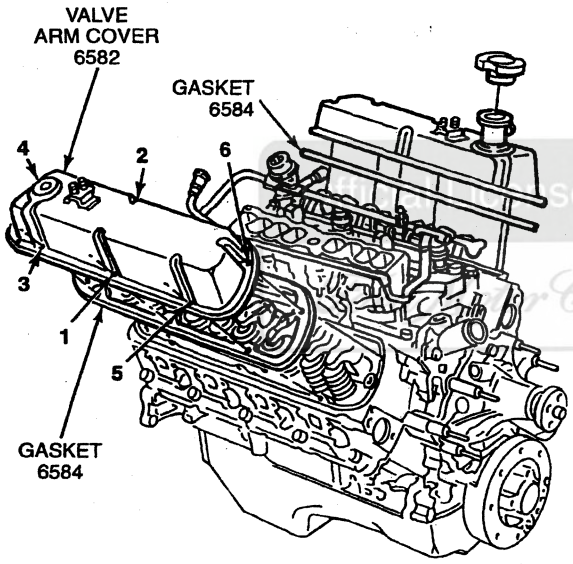

VALVE COVER TIGHTENING SEQUENCE

A24894-A

2. Follow removal procedure in reverse order. Tighten valve cover attaching bolts to 16-20 N·m (12-15 lb-ft).
3. To install serpentine drive belt, refer to belt routing decal.

Rocker Arm

Removal

1. Remove rocker arm attaching bolt, rocker arm seat (6A528), rocker arm (6564) and rocker arm fulcrum guide (6A588).

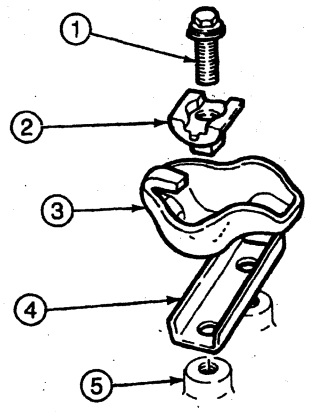

A4870-C

Item	Part Number	Description
1	390385	Attaching Bolt
2	6A528	Rocker Arm Seat
3	6564	Rocker Arm
4	6A588	Rocker Arm Fulcrum Guide
5	—	Threaded Pedestal (Part of 6049)

Installation

1. Apply Multi-Purpose Grease DOAZ-19584-AA or equivalent meeting Ford specifications ESB-M1C93-B and ESR-M1C159-A to the top of the valve stem, the rocker arm seat and socket.
2. Install the rocker arm fulcrum guide, rocker arm, fulcrum and bolt. Tighten to 24-34 N·m (18-25 lb-ft).

Valve Spring, Retainer and Valve Stem Seal

Removal

Broken valve spring (6513) or damaged valve stem seals (6571) and retainers can be replaced without removing the cylinder head (6049), provided damage to valve or valve seat has not occurred.

1. Remove valve cover (6582). Refer to Valve Cover and Gasket in the In-Vehicle Service portion of this section.
2. Remove the applicable spark plug (12405) and bring the piston (6108) to the top of the bore to prevent accidental loss of the valve into the cylinder.
3. Remove the valve rocker arm fulcrum bolts, rocker arm seats (6A528), rocker arms (6564) and push rods (6565) from the applicable cylinder.

IN-VEHICLE SERVICE (Continued)

4. NOTE: Failure of the air pressure to hold the valve(s) in the closed position is an indication of valve seat damage and requires removal of the cylinder head.

   Install an air line with an adapter in the spark plug hole and apply air pressure to the cylinder.
5. Install the fulcrum bolt and position a suitable valve spring compressor. Compress the valve spring and remove the valve spring retainer key (6518), sleeve, retainer or rotator and valve spring.
6. Remove and discard the valve stem seal.
7. If air pressure has forced the piston to the bottom of the cylinder, any removal of air pressure will allow the valve(s) to fall into the cylinder. A rubber band, tape or string wrapped around the end of the valve stem will prevent this condition and will still allow enough travel to check the valve for binds.
8. Inspect the valve stem for damage. Rotate the valve and check the valve stem tip for eccentric movement during rotation. Move the valve up and down through normal travel in the valve guide and check the stem for binds. If the valve has been damaged, it will be necessary to remove the cylinder head. Refer to Cylinder Head(s) in the In-Vehicle Service portion of this section.

Installation

1. If the condition of the valve proved satisfactory, lubricate the valve stem with Engine Assembly Lubricant D9AZ-19579-D or equivalent meeting Ford specification ESR-M99C80-A. Hold the valve in the closed position and apply air pressure within the cylinder.
2. Install a new valve stem seal on the valve guide. Valve stem seals must be bottomed on guide. Place the valve spring in position over the valve and install the valve spring retainer and sleeve. Compress the valve spring and install the valve spring retainer keys. Remove the compressor tool and fulcrum bolt.

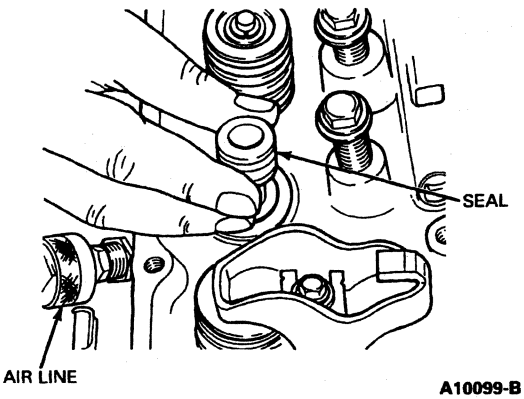

A10099-B

3. Lubricate the push rod ends with Multi-Purpose Grease DOAZ-19584-AA or equivalent meeting Ford specifications ESB-M1C93-B and ESR-M1C159-A and install the push rod. Apply Multi-Purpose Grease DOAZ-19584-AA or equivalent meeting Ford specifications ESB-M1C93-B and ESR-M1C159-A to the tip of the valve stem.
4. Apply Multi-Purpose Grease DOAZ-19584-AA or equivalent meeting Ford specifications ESB-M1C93-B and ESR-M1C159-A to the rocker arms and rocker arm seats. Install the rocker arms, rocker arm seats and fulcrum bolts. Tighten to 24-34 N·m (18-25 lb-ft).
5. Turn off the air and remove the air line and adapter. Install the spark plug and connect the spark plug wire.
6. Clean and install the valve cover. Refer to Valve Cover and Gasket in the In-Vehicle Service portion of this section.

Valve Tappet, Hydraulic

Before replacing a hydraulic valve tappet (6500) for noisy operation, verify the noise is not caused by improperly adjusted valve-to-rocker arm clearance or by worn rocker arms (6564) or push rods (6565).

Removal

1. Remove the intake manifold (9424) and related parts.
2. Disconnect secondary air injection manifold tube (9B449) at the secondary air injection pump (AIR pump)(9A486) and place it out of the way.
3. Remove the valve cover (6582), then loosen the valve rocker arm fulcrum bolts and rotate the rocker arms to the side.
4. Remove the push rods in sequence so that they can be installed in their original positions.

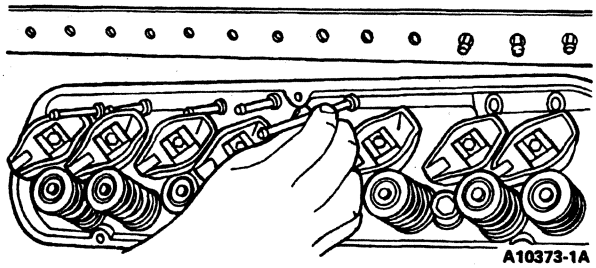

A10373-1A

5. Remove the valve tappets and place them in a rack so that they can be installed in their original bores.

   If necessary to disassemble a valve tappet, refer to Valve Tappet, Hydraulic in the Disassembly and Assembly portion of this section.

IN-VEHICLE SERVICE (Continued)

Installation

1. NOTE: Valve tappets and bores are to be lubricated with engine oil of the quality recommended in the Owner Guide before installation.

   Clean the external surfaces and install the valve tappets in the bores from which they were removed, using suitable hydraulic tappet puller. If a new valve tappet is being installed, check the new valve tappet for a free fit in the bore in which it is to be installed. Lubricate the valve tappet and bore with recommended quality engine oil before inserting the valve tappet.
2. Lubricate the ends of the push rods with Multi-Purpose Grease DOAZ-19584-AA or equivalent meeting Ford specifications ESB-M1C93-B and ESR-M1C159-A and install the push rods in their original positions. Apply Multi-Purpose Grease DOAZ-19584-AA or equivalent meeting Ford specifications ESB-M1C93-B and ESR-M1C159-A to the valve stem tip.
3. Lubricate the rocker arms and rocker arm seats (6A528) with Multi-Purpose Grease DOAZ-19584-AA or equivalent meeting Ford specifications ESB-M1C93-B and ESR-M1C159-A and position the rocker arms over the push rod. Tighten rocker arm fulcrum bolts to 24-34 N·m (18-25 lb-ft).
4. Install the valve covers.
5. Reconnect secondary air injection manifold tubes.
6. Install the intake manifold.

Intake Manifold, Upper

Removal

1. Remove engine air cleaner intake tube (9A624) from upper intake manifold.
2. Remove throttle body shield.
3. Disconnect electrical connectors at idle air control valve (IAC valve)(9F715), throttle position sensor (TP sensor)(9B989) and EGR position sensor.
4. **CAUTION: When disconnecting throttle cable from ball stud, use a screwdriver or similar tool close to the stud and pry slowly. Pulling by hand can damage the cable.**

   Disconnect throttle linkage at throttle ball. Remove two bolts securing accelerator cable bracket (9723) to intake. Position accelerator cable bracket with cables out of way.
5. Disconnect upper intake manifold vacuum fitting connections by disconnecting all vacuum lines to vacuum tree, vacuum lines to EGR external pressure valve (9F483) and vacuum line to fuel pressure regulator (9C968).
6. Disconnect PCV system by disconnecting hose from fitting on top front of upper intake manifold (9424).
7. Disconnect EGR transducer hoses from EGR tube.
8. Disconnect electrical connector from EGR transducer (9J433).
9. Remove two nuts from EGR transducer bracket and remove EGR transducer.
10. Remove canister purge line(s) from fitting(s) on throttle body (9E926).
11. NOTE: Place drain pan under vehicle.

    Disconnect water heater lines from the throttle body.
12. Disconnect EGR tube from EGR external pressure valve by removing flange nut.
13. Remove bolt from upper intake support bracket to upper intake manifold.
14. Remove six upper intake manifold retaining bolts.
15. Remove upper intake manifold and throttle body as an assembly from lower intake manifold.

Installation

1. **CAUTION: Do not use solutions such as brake cleaner, carburetor cleaner, etc., as these solutions can leave a residue on the machined surfaces. Use only a cleaner which meets or exceeds Ford specification WSE-M5B392-A, such as Metal Surface Cleaner F4AZ-19A536-RA or equivalent.**

   Clean and inspect the mounting faces of the lower and upper intake manifolds.
2. Position new gasket on lower intake mounting face. The use of alignment studs may be helpful.
3. Install upper intake manifold and throttle body assembly to lower intake manifold, making sure gasket remains in place (if alignment studs are not used).
4. Position EGR transducer. Install two nuts and tighten to 17-24 N·m (13-18 lb-ft).
5. Connect electrical connector to EGR transducer.
6. Connect EGR transducer hoses to EGR tube.
7. Install six upper intake manifold retaining bolts and tighten to 17-24 N·m (13-18 lb-ft).
8. Install upper intake support bracket to upper manifold attaching bolt.
9. Install EGR tube. Tighten flange nuts to 41-54 N·m (30-40 lb-ft).
10. Install canister purge lines to fittings on throttle body.
11. Connect water heater lines to the throttle body.
12. Connect PCV hose to rear of upper intake manifold.
13. Connect vacuum lines to vacuum tree, EGR external pressure valve and fuel pressure regulator.

Ford Motor Company Licensed Product

IN-VEHICLE SERVICE (Continued)

14. Position accelerator cable bracket with cables to upper intake manifold. Install two retaining bolts and tighten to 11-13 N·m (8-10 lb-ft). Connect throttle cable to throttle body.
15. Connect electrical connectors at idle air control valve, throttle position sensor and EGR position sensor.
16. Install throttle body shield.
17. Fill and bleed cooling system. Refer to Section 03-03.

Intake Manifold

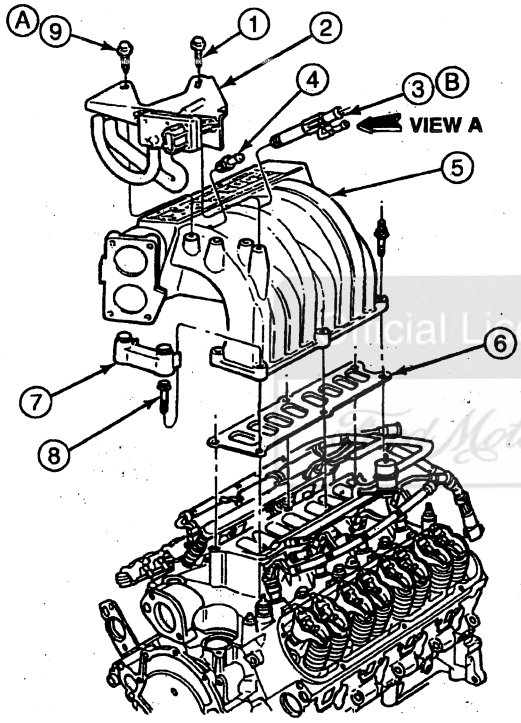

5.0L SHOWN

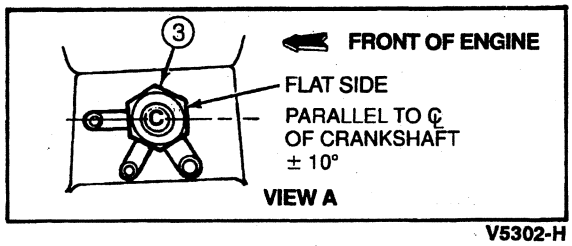

V5302-H

Item	Part Number	Description
1	56703	Bolt
2	9J433	EGR Transducer
3	9A474	Intake Manifold Vacuum Outlet Fitting and Cap
4	9A474	Connector
5	9424	Intake Manifold (Upper)

(Continued)

Item	Part Number	Description
6	9H486	Intake Manifold Upper Gasket
7	9471	Intake Manifold Shield
8	390358	Bolt (5 Req'd)
9	390249	Screw
A	—	Tighten to 17-24 N·m (13-18 Lb-Ft)

Intake Manifold, Lower

Removal

1. Remove upper intake manifold (9424) and throttle body (9E926) as outlined in this section, prior to lower intake manifold removal.
2. Drain cooling system.
3. Remove distributor assembly, distributor cap (12106) and wires. Mark position of distributor and rotor during removal so that they can be installed in their original positions.
4. Disconnect the electrical connections at the engine coolant temperature sensor (ECT sensor)(12A648), engine temperature sending unit and intake air temperature sensor (IAT sensor)(12A697).
5. Disconnect radio ignition interference capacitor (18801), electrical connector and coil wire from coil.
6. Disconnect electrical connector and vacuum harness from EGR vacuum regulator solenoid (9J459).
7. Disconnect electrical connector and vacuum harness from secondary air injection vacuum regulator solenoid (9S448).
8. Remove nut from ignition coil mounting bracket to exhaust manifold stud and two nuts for coil mounting bracket and remove coil and bracket.
9. Disconnect electrical connector from injector.
10. Remove two retaining nuts for emission brackets.
11. Perform all preservice procedures to relieve any fuel system pressure. Refer to Section 03-04A.
12. Disconnect fuel supply and return line retaining clips. Disconnect fuel supply and return lines from fuel rails, using Disconnect Tool D87L-9280-A (3/8-inch) and D87L-9280-B (1/2-inch) or equivalents. Refer to Section 03-04A for fuel injection supply manifold procedure.
13. Remove water hose connection (8592).
14. Remove heater outlet hose at intake manifold.
15. Remove intake retaining bolts and studs, noting location of studs and bolts.
16. Remove lower intake manifold assembly.

Unofficial Licensed Product
Ford Motor Company

IN-VEHICLE SERVICE (Continued)

Lower Intake Manifold

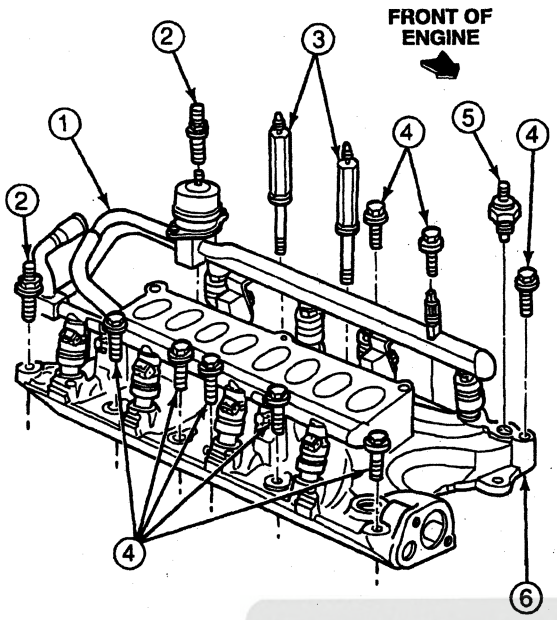

DA0975-A

Item	Part Number	Description
1	9F792	Fuel Injection Supply Manifold
2	391445	Stud
3	390948-S36	Stud
4	388058	Bolt
5	10884	Water Temperature Indicator Sender Unit
6	9424	Intake Manifold

Installation

1. Clean and inspect the mounting faces of the lower intake manifold and cylinder block surfaces. Refer to Section 03-00.
2. Apply 1.6-mm (1/16-inch) bead of Silicone Gasket Adhesive F6AZ-19562-A or equivalent meeting Ford specification WSE-M4G323-A6 to the end seals (junction).

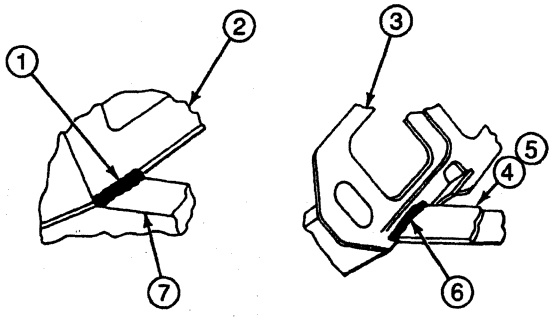

A3715-P

Item	Part Number	Description
1	—	Sealer (4 Joints)
2	6049	Cylinder Head
3	9439	Intake Manifold Gasket
4	9A424	Intake Manifold Seal (LH)
5	9A425	Intake Manifold Seal (RH)
6	—	Sealer (4 Seal Ends)
7	6010	Cylinder Blocks

3. NOTE: This sealer sets up within 15 minutes after application. To ensure effective sealing, assembly should proceed promptly.

   NOTE: The gaskets must be interlocked with the seal tabs.

   NOTE: Install the seals with the bead side down.

   Install end seals on the cylinder blocks (6010) and new gaskets on the cylinder heads (6049).

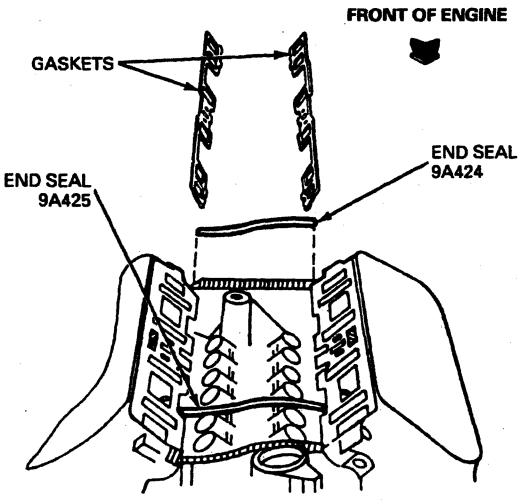

V4793-B

4. Install two locator pins into opposite corners.
5. Carefully lower intake manifold assembly into position.

Official Licensed Product
Ford Motor Company

IN-VEHICLE SERVICE (Continued)

Lower Intake Manifold

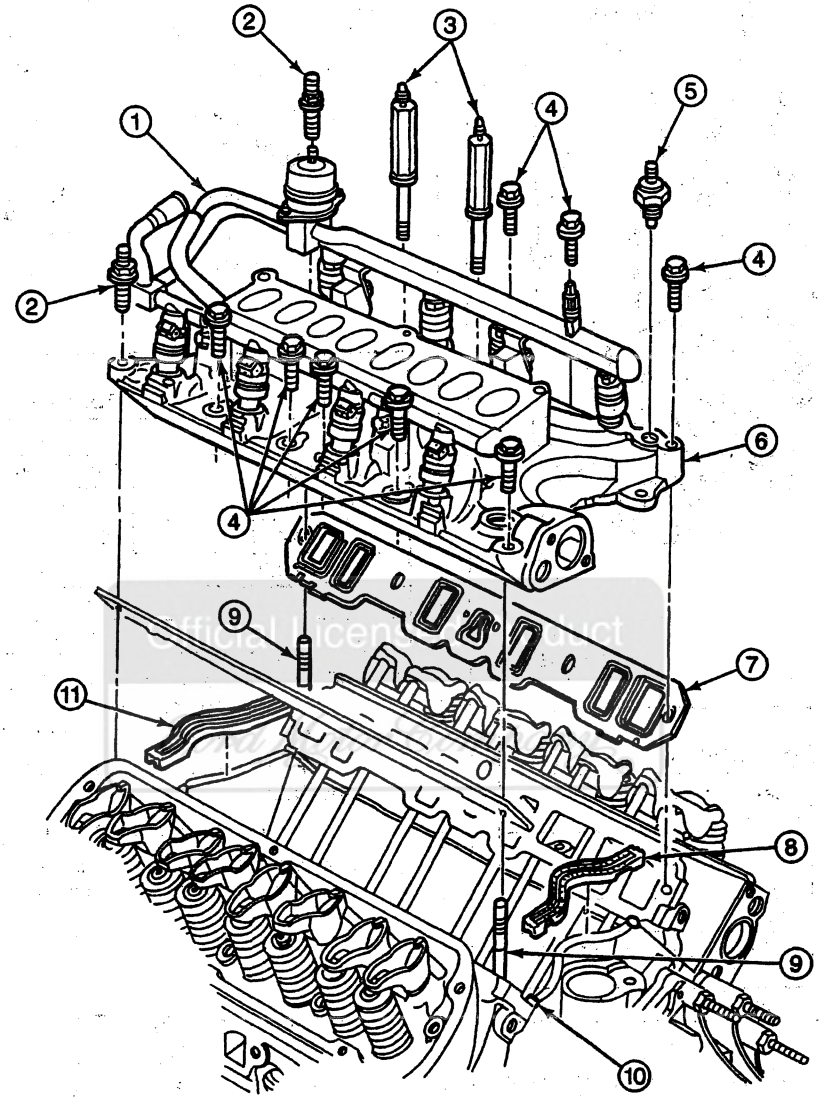

Item	Part Number	Description
1	9F792	Fuel Injection Supply Manifold
2	391445	Stud
3	390948-S36	Stud
4	388058	Bolt
5	10884	Water Temperature Indicator Sender Unit

(Continued)

Item	Part Number	Description
6	9424	Intake Manifold
7	9439	Intake Manifold Gasket
8	9A425	Seal (Front)
9	—	Locating Pin
10	—	Sealer (4 Places)
11	9A424	Seal (Rear)

IN-VEHICLE SERVICE (Continued)

6. Install intake manifold bolts and studs. Tighten all bolts and studs using the sequence shown in two steps as follows:

   Step 1. Tighten all to 7-14 N·m (62-124 lb-in).

   Step 2. Tighten all to 31-34 N·m (23-25 lb-ft).

Tightening Sequence

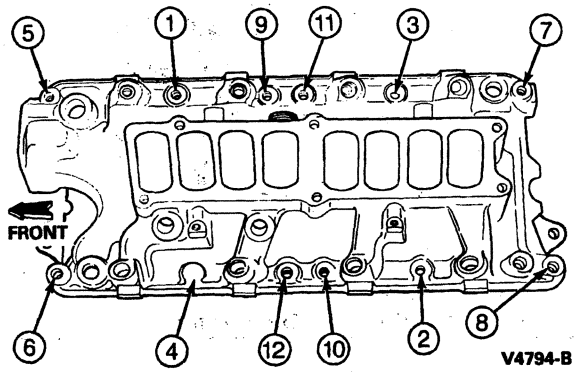

7. Install nut from ignition coil mounting bracket to exhaust manifold stud and two nuts for coil mounting bracket and install coil and bracket. Tighten nuts securely.
8. Connect electrical connector and vacuum harness-to- secondary air injection vacuum regulator solenoid.
9. Connect electrical connector and harness to EGR vacuum regulator solenoid.
10. Connect radio ignition interference capacitor, electrical connector and coil wire to coil.
11. Connect electrical connections at the engine coolant temperature sensor, engine temperature sending unit and intake air temperature sensor.
12. Install distributor assembly, distributor cap and wires and adjust distributor timing.
13. Install upper intake manifold as outlined.
14. Fill and bleed the cooling system. Refer to Section 03-03.
15. Perform all post-service procedures. Refer to Section 03-04A.

Cylinder Head(s)

If a cylinder head (6049) is to be replaced, refer to Cylinder Head in the Disassembly and Assembly portion of this section, and transfer all valves, valve springs (6513), spark plugs (12405), etc., to the new cylinder head. Clean and inspect all parts, and reface the valves. Refer to Section 03-00. Check all assembly clearances before assembling the new or used parts to the new cylinder head.

Removal

1. Remove the upper and lower intake manifolds (9424).
2. Remove the valve cover (6582).
3. Lift tensioner and remove drive belt (8620). Remove the engine air cleaner intake tube (9A624) from the left cylinder head assembly.

   If the left cylinder head is being removed, remove the A/C compressor/power steering bracket at the front of the cylinder head, complete with accessories. Remove oil level dipstick (6750) and oil level indicator tube (6754) assembly and speed control bracket, if so equipped.
4. Disconnect the generator wiring harness and secondary air injection pump hoses, if the right cylinder head is to be removed. Remove the three bolts attaching the generator/secondary air injection pump bracket to the cylinder head. Remove the generator, secondary air injection pump (AIR pump)(9A486) and bracket as an assembly from the engine (6007).
5. Disconnect the exhaust manifold(s) from the muffler inlet pipe(s).
6. Loosen the rocker arm seat bolts so that the rocker arms (6564) can be rotated to the side. Remove the push rods (6565) in sequence so that they may be installed in their original positions.

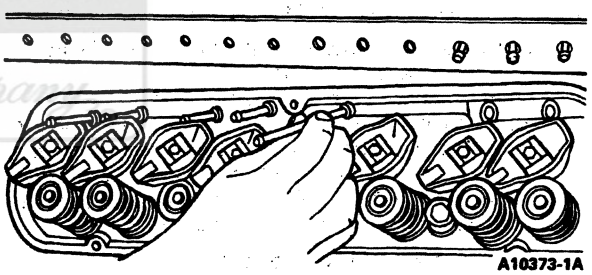

7. Disconnect the secondary air injection manifold tubes (9B449) at the check valves and plug the check valve.
8. Install the cylinder head holding fixtures. Remove the cylinder head attaching bolts and lift the cylinder head off the cylinder blocks (6010). Remove and discard the head gasket (6051).

Installation

1. Clean the cylinder head, intake manifold, valve cover and cylinder head gasket surfaces. If the cylinder head was removed for a head gasket replacement, check the flatness of the cylinder head and block gasket surfaces. Refer to Section 03-00.
2. NOTE: Do not apply sealer to a composition gasket.

   A specially treated composition gasket is used. Position the new head gasket over the cylinder dowels on the cylinder blocks. Position the cylinder head on the cylinder blocks and install the attaching bolts. Remove the holding fixtures.

Official Licensed Product Ford Motor Company

IN-VEHICLE SERVICE (Continued)

3. The cylinder head bolts are tightened in two steps for all 5.8L engines.
   - Tighten head bolts as follows:
     - — Tighten all bolts in sequence to 129-142 N·m (95-105 lb-ft).
     - — Tighten all bolts in sequence to 143-151 N·m (105-112 lb-ft).

   When cylinder head bolts have been tightened following this procedure, it is not necessary to retighten the bolts after extended operation. However, the bolts can be checked and retightened if desired.

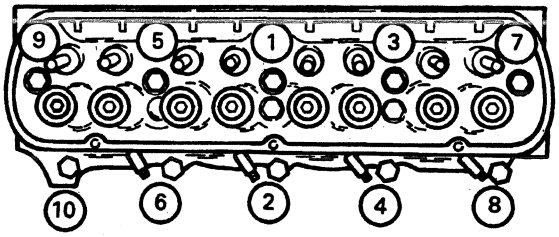

A10374-1A

4. NOTE: Do not attempt to straighten push rods.

   Clean the push rods in a suitable solvent. Blow out the oil passage in the push rod with compressed air. Check the ends of the push rods for nicks, grooves, roughness or excessive wear. Visually check the push rods for straightness or check push rod runout with a dial indicator. Refer to Section 03-00. If runout exceeds the maximum limit at any point, discard the push rod.
5. Lubricate the ends of the push rods with Multi-Purpose Grease DOAZ-19584-AA or equivalent meeting Ford specifications ESB-M1C93-B and ESR-M1C159-A and install them in their original positions. Apply Multi-Purpose Grease DOAZ-19584-AA or equivalent meeting Ford specifications ESR-M1C159-A and ESB-M1C93-B to the valve stem tips.
6. Lubricate the rocker arms and rocker arm seats (6A528) with Multi-Purpose Grease DOAZ-19584-AA or equivalent meeting Ford specifications ESR-M1C159 or ESB-M1C93-B, then install the rocker arms.

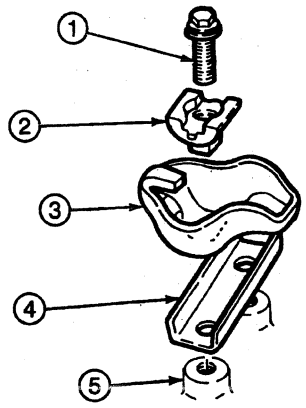

A4870-C

Item	Part Number	Description
1	390385	Attaching Bolt
2	6A528	Rocker Arm Seat
3	6564	Rocker Arm
4	6A588	Rocker Arm Fulcrum Guide
5	—	Threaded Pedestal (Part of 6049)

7. Connect the exhaust manifold(s) at the muffler inlet pipe(s). Tighten the nuts to 35-45 N·m (26-33 lb-ft).
8. If the right cylinder head was removed, install the secondary air injection pump generator bracket and accessories on the right cylinder head. Refer to Section 03-05 to install serpentine drive belt and auto tensioner.

   If the left cylinder head was removed, install the power steering and A/C compressor bracket with accessories at the front of the cylinder head. Install the oil level dipstick and oil level indicator tube assembly and speed control bracket, if so equipped.
9. **CAUTION: Do not use solutions such as brake cleaner, carburetor cleaner, etc., as these solutions can leave a residue on the machined surfaces. Use only a cleaner which meets or exceeds Ford specification WSE-M5B392-A, such as Metal Surface Cleaner F4AZ-19A536-RA or equivalent.**

   Clean the valve cover gasket surfaces. Place the new gaskets on the cylinder head mating surfaces. Install the valve covers.
10. Install the upper and lower intake manifolds and related parts.
11. Install the secondary air injection manifold tube at the rear of the cylinder heads. Reconnect the air supply hose to the secondary air injection pump.

Official Licensed Product

IN-VEHICLE SERVICE (Continued)

Crankshaft Pulley Damper / Crankshaft Front Seal

SPECIAL SERVICE TOOL(S) REQUIRED

Description	Tool Number
Crankshaft Seal Replacer / Cover Aligner	T88T-6701-A

Removal

1. Drain radiator (8005). Refer to Section 03-03.
2. Remove jack handle.
3. Remove air intake duct from grille reinforcement.
4. Remove upper radiator hose.
5. Loosen fan bolts.
6. Remove the serpentine drive belt (8620).
7. Remove the bolts attaching the fan shroud (8146) to the radiator.
8. Remove the fan clutch bolts from the water pump shaft. Remove the fan blade (8600), fan clutch (8A616) and fan shroud.
9. Remove the crankshaft pulley (6312) from the crankshaft vibration damper / pulse ring. Remove the damper attaching screw and washer. Install Gear and Pulley Puller D80L-522-A or equivalent on the crankshaft vibration damper / pulse ring and remove the crankshaft vibration damper / pulse ring.
10. Disconnect misfire sensor electrical connector, if equipped.
11. Remove timing pointer (6023) and misfire sensor, if equipped.
12. Use suitable prybar to remove crankshaft front seal (6700).

Installation

1. Coat a new crankshaft front seal with Lubriplate or equivalent. Place it onto Crankshaft Seal Replacer / Cover Aligner T88T-6701-A. Place the sleeve and crankshaft front seal onto the end of the crankshaft (6303) and push it toward the engine (6007) until the crankshaft front seal starts into the engine front cover (6019).
2. Place the installation screw, washer and nut onto the end of the crankshaft. Thread the screw into the crankshaft. Tighten the nut against the washer and installation sleeve to force the crankshaft front seal into the engine front cover. Remove the installation tool from the crankshaft.

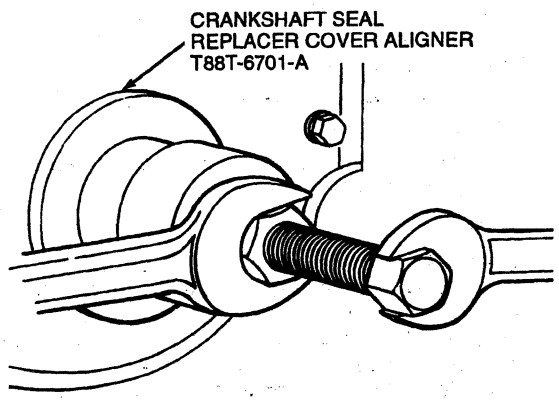

A10352-E

3. Apply Multi-Purpose Grease DOAZ-19584-AA or equivalent meeting Ford specifications ESB-M1C93-B or ESR-M1C159-A to the oil seal rubbing surface of the vibration damper / pulse ring inner hub to prevent damage to the crankshaft front seal and to the front of the crankshaft for crankshaft vibration damper / pulse ring installation.
4. Apply a 4-mm (0.16-inch) bead of suitable sealer on the outer end of the damper keyway.
5. Line up the crankshaft vibration damper keyway with the key on the crankshaft. Install the crankshaft vibration damper / pulse ring on the crankshaft. Install the capscrew and washer. Tighten the screw to 95-122 N·m (70-90 lb-ft). Install the crankshaft. Make sure the crankshaft pulley is bottomed on the damper pilot.
6. Install timing pointer and misfire sensor, if so equipped.
7. Connect misfire sensor electrical connector, if so equipped.
8. Position the fan shroud over the water pump pulley (8509). Install the fan blade and fan clutch. Install the fan shroud attaching screws.
9. Route the drive belt according to the belt routing decal.
10. Install upper radiator hose.
11. Install air intake duct from grille reinforcement.
12. Install jack handle.
13. Fill radiator. Refer to Section 03-03.

Water Pump

Removal

1. Drain the cooling system. Refer to Section 03-03.
2. Remove drive belt (8620).
3. Loosen the bolts on the fan clutch (8A616).
4. Remove the bolts securing the fan shroud (8146) to the radiator (8005). Remove the fan shroud.

Ford Motor Company Licensed Product

IN-VEHICLE SERVICE (Continued)

5. Disconnect the lower radiator hose (8286), heater water hose (18472) and water bypass tube (8548) at the water pump (8501). Remove water pump pulley (8509).
6. Remove power steering and A/C bracket bolts and position bracket out of way.
7. Remove water pump attaching bolts and remove water pump from engine (6007).

Installation

1. **CAUTION: Do not use solutions such as brake cleaner, carburetor cleaner, etc., as these solutions can leave a residue on the machined surfaces. Use only a cleaner which meets or exceeds Ford specification WSE-M5B392-A, such as Metal Surface Cleaner F4AZ-19A536-RA or equivalent.**

   NOTE: Before a water pump is installed, check it for damage. If it is damaged, replace it.

   Remove all gasket material from the mounting surfaces of the engine front cover (6019) and water pump.
2. Position a new gasket, coated on both sides with Ford Perfect Seal Sealing Compound F2AZ-19554-AA or equivalent meeting Ford specifications ESE-M4G115-A or ESR-M18P2-A, on the engine front cover; then install the water pump.
3. Install the attaching bolts. Tighten bolts to 20-28 N·m (15-21 lb-ft).
4. Install the fan shroud, lower radiator hose, heater water hose and water bypass tube. Tighten clamps to 3-4 N·m (27-35 lb-in).
5. Reposition power steering and A/C bracket. Install power steering and A/C bracket bolts. Tighten bolts securely.
6. Position water pump pulley on hub.
7. Install the fan blade (8600) and fan shroud assembly to the water pump pulley. Install and tighten bolts to 16-24 N·m (12-18 lb-ft).
8. Install the drive belt. Refer to routing decal.
9. Fill and bleed the cooling system. Refer to Section 03-03. Operate the engine until normal operating temperatures have been reached and check for leaks.

Engine Front Cover

Removal

1. Refer to Water Pump in the In-Vehicle Service portion of this section. Perform all steps except removal of the water pump (8501). Leave it attached to the engine front cover (6019).
2. Remove oil pan. Refer to Oil Pan / Oil Pump Screen Cover and Tube in the In-Vehicle Service portion of this section.
3. Disconnect electrical connector from misfire sensor.
4. NOTE: The timing pointer and misfire sensor are serviced separately.

   Remove two screw and washer assemblies and remove timing pointer and misfire sensor.
5. Remove the crankshaft pulley (6312) from the crankshaft vibration damper / pulse ring. Remove the damper attaching bolt and washer. Install Gear and Pulley Puller D80L-522-A or equivalent on the crankshaft vibration damper / pulse ring and remove the crankshaft vibration damper / pulse ring.
6. Remove engine front cover bolts.

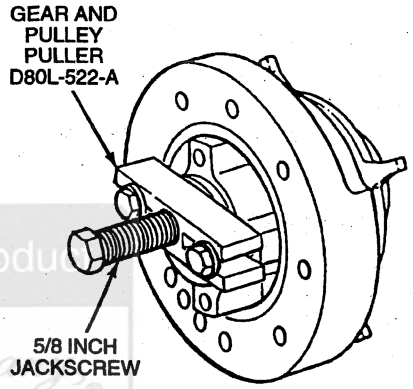

A10384-D

7. Remove the oil pan-to-engine front cover attaching bolts. Remove the engine front cover and water pump as an assembly.
8. Discard the engine front cover gasket.

Installation

1. **CAUTION: Do not use solutions such as brake cleaner, carburetor cleaner, etc., as these solutions can leave a residue on the machined surfaces. Use only a cleaner which meets or exceeds Ford specification WSE-M5B392-A, such as Metal Surface Cleaner F4AZ-19A536-RA or equivalent.**

   Clean the engine front cover, and the cylinder block gasket surfaces. Clean the oil pan gasket surface where the oil pan (6675) and engine front cover fasten.

   Install a new crankshaft front seal (6700).
2. Lubricate the timing chain / belt (6268) and sprockets with heavy engine oil.
3. Position the engine front cover on the cylinder blocks (6010). Use care when installing the engine front cover to avoid crankshaft front seal damage or possible gasket mislocation.
4. Install the engine front cover and water pump.

IN-VEHICLE SERVICE (Continued)

5. Hand-start bolts in holes 3, 4, 6, 10, 12, 13, and 14.
6. NOTE: The timing pointer (6023) and misfire sensor are serviced separately.

   Install timing pointer and misfire sensor and tighten to 8-12 N·m (70-106 lb-in).
7. Tighten remaining bolts to 16-24 N·m (12-18 lb-ft).

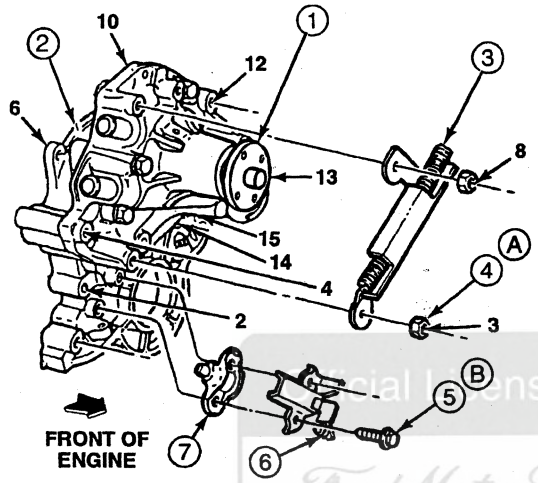

5.8L SHOWN A24892-A

Item	Part Number	Description
1	8501	Water Pump
2	6019	Engine Front Cover
3	9D930	Fuel Charging Wiring
4	33797	Nut
5	56704	Bolt
6	6023	Timing Pointer
7	6C351	Misfire Sensor
A	—	Tighten to 16-24 N·m (12-18 Lb-Ft)
B	—	Tighten to 8-12 N·m (70-106 Lb-In)

8. Connect electrical connector to misfire sensor.
9. Install crankshaft vibration damper / pulse ring and install bolt and washer. Tighten bolt to 54-71 N·m (40-52 lb-ft). Install crankshaft pulley on the crankshaft vibration damper / pulse ring.
10. Apply Multi-Purpose Grease DOAZ-19584-AA or equivalent meeting Ford specifications ESB-M1C93-B or ESR-M1C159-A to the oil seal rubbing surface of the vibration damper inner hub, to prevent damage to the crankshaft front seal and to the front of the crankshaft (6303) for crankshaft vibration damper / pulse ring installation.
11. Install oil pan. Refer to Oil Pan / Oil Pump Screen Cover and Tube in the In-Vehicle Service portion of this section.
12. Complete the remaining steps under Water Pump in the In-Vehicle Service portion of this section.
13. Operate the engine (6007) at fast idle and check the coolant level and check for oil leaks. Check and adjust the ignition timing to specifications on engine decal.

Timing Chains and Sprockets

Removal

1. NOTE: To remove timing chain cover, refer to Engine Front Cover in the In-Vehicle Service portion of this section.

   Check the timing chain / belt (6268) deflection. Refer to Section 03-00. If deflection exceeds specifications (12.7 mm [0.50 inch]), replace the chain and sprockets.
2. Crank the engine (6007) until the timing marks on the sprockets are positioned as shown.

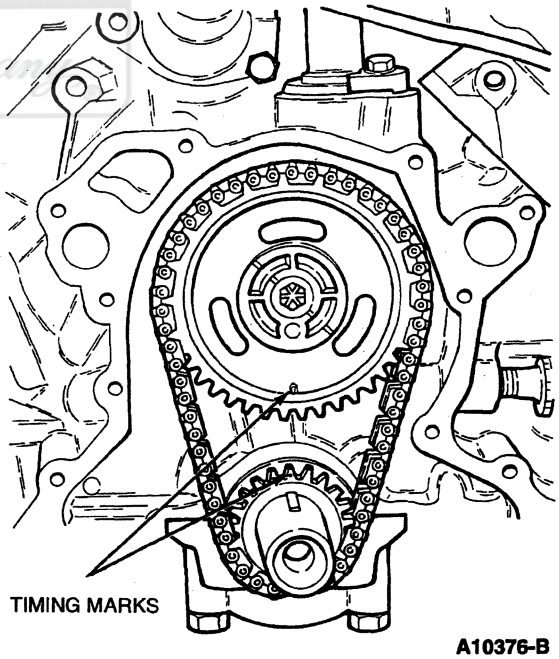

A10376-B

3. Remove the camshaft sprocket capscrew and washers. Slide both sprockets and the timing chain / belt forward, and remove them as an assembly.

Installation

1. Position the sprockets and timing chain / belt on the camshaft (6250). Make sure the timing marks on the sprockets are positioned as shown.

Official Licensed Product Ford Motor Company

IN-VEHICLE SERVICE (Continued)

2. Install the washers and camshaft sprocket capscrew. Tighten the sprocket capscrew to 54-61 N·m (40-45 lb-ft).

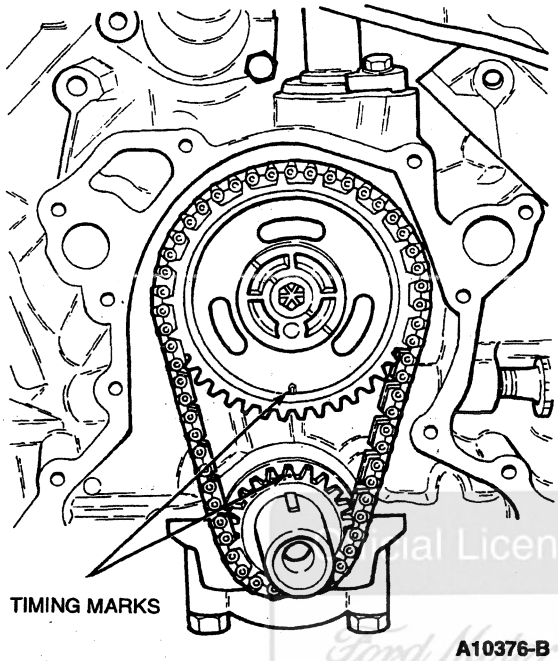

3. Lubricate the timing chain / belt and sprockets with heavy engine oil.

Camshaft

Removal

1. Drain the cooling system. Disconnect the lower radiator hose (8286) and upper radiator hose (8260). Disconnect the transmission oil cooler lines, if so equipped. Remove the radiator (8005). Refer to Section 03-03.
2. Remove A / C condenser. Refer to Section 12-03A in the Body, Chassis Manual.
3. Remove the air conditioner and power steering bracket and accessories.
4. Remove the engine front cover (6019) and the timing chain / belt (6268). Refer to Engine Front Cover and to Timing Chains and Sprockets in the In-Vehicle Service portion of this section.
5. Remove valve covers (6582). Refer to Valve Cover and Gasket in the In-Vehicle Service portion of this section.
6. Remove the intake manifold (9424) and throttle body (9E926) as an assembly. Refer to Intake Manifold, Upper and Intake Manifold, Lower in the In-Vehicle Service portion of this section.
7. Remove the push rods (6565) in sequence so they can be installed in their original positions.
8. Remove the valve tappets (6500). Refer to Valve Tappet, Hydraulic in the In-Vehicle Service portion of this section.
9. **CAUTION: Use caution to avoid damaging the camshaft bearings.**

   Remove the camshaft thrust plate (6269). Carefully remove the camshaft (6250) by pulling toward the front of the engine (6007).

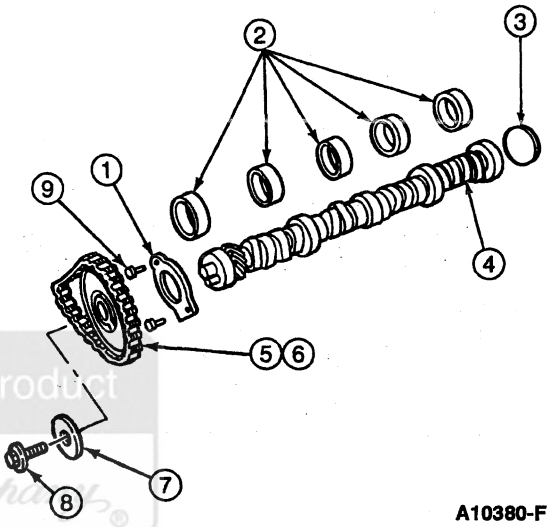

Item	Part Number	Description
1	6269	Camshaft Thrust Plate
2	6261	Camshaft Bearings
3	6266	Camshaft Rear Bearing Cover
4	6250	Camshaft
5	6268	Timing Chain / Belt
6	6256	Camshaft Sprocket
7	6278	Camshaft Sprocket Washer
8	43002	Bolt
9	390392-S	Bolt

Installation

1. Oil the camshaft journals and apply Multi-Purpose Grease DOAZ-19584-AA or equivalent meeting Ford specifications ESB-M1C93-B and ESR-M1C159-A or equivalent to the lobes. Carefully slide the camshaft through the bearings. Lubricate the camshaft thrust plate with recommended quality engine oil and install the camshaft thrust plate with the groove toward the cylinder blocks (6010).
2. Lubricate the valve tappets and valve tappet bores with SAE 50WT engine oil. Install the valve tappets in the bores from which they were removed.

Ford Motor Company Official Licensed Product

IN-VEHICLE SERVICE (Continued)

3. Lubricate the ends of the push rods with Multi-Purpose Grease DOAZ-19584-AA or equivalent meeting Ford specifications ESB-M1C93-B or ESR-M1C159-A and install the push rods in their original positions. Apply Multi-Purpose Grease DOAZ-19584-AA or equivalent meeting Ford specifications ESB-M1C93-B or ESR-M1C159-A to the valve stem tips. Lubricate the rocker arms (6564) and rocker arm seats (6A528) with Multi-Purpose Grease DOAZ-19584-AA or equivalent meeting Ford specifications ESB-M1C93-B or ESR-M1C159-A and position the rocker arms over the push rods. Tighten bolts to 24-34 N·m (18-25 lb-ft).
4. Perform a valve clearance check. Refer to Valve Clearance in the Adjustments portion of this section.
5. **CAUTION: To prevent oil from entering the PCV system during air-powered oil fills, the closure hose should be disconnected from the oil fill pipe (6A868) and positioned away from the oil source. Cover the hose port with a shop towel to prevent oil from spilling onto the engine during oil fill. Reconnect the closure hose after the oil has been filled to the proper level.**

   Fill the crankcase with the proper grade and quality of engine oil.
6. Install air conditioner. Refer to Section 12-03A in the Body, Chassis Manual for air conditioner service.
7. Start the engine, then check and adjust the ignition timing (refer to the engine decal for correct settings). Connect the distributor and intake manifold vacuum hoses.
8. Install push rods in their original positions.
9. Install upper intake manifold and throttle body as an assembly. Refer to Intake Manifold, Upper in the In-Vehicle Service portion of this section.
10. Install valve covers.
11. Install timing chain/belt and engine front cover. Refer to Engine Front Cover and to Timing Chains and Sprockets in the In-Vehicle Service portion of this section.
12. Connect upper radiator hose and lower radiator hose.
13. Connect transmission oil cooler lines, if so equipped.
14. Install radiator and fill cooling system. Refer to Section 03-03.
15. Operate the engine at fast idle and check all hose connections and gaskets for leaks. Retighten intake manifold bolts and nuts to 31-34 N·m (23-25 lb-ft).

Exhaust Manifolds, Right and Left

Removal, Right

1. Raise vehicle.
2. Remove exhaust manifold-to-exhaust pipe nuts.
3. Lower vehicle.
4. Remove nuts and upper intake manifold support bracket, transmission dipstick tube bracket, engine oil dipstick tube bracket, and wire bracket.
5. Remove nuts and spark plug heat shield (12A406).
6. NOTE: Exhaust manifold studs/bolts vary by length and type both by location on the particular vehicle and by model. Note which studs/bolts go in appropriate holes.

   Remove studs and bolts and right-hand exhaust manifold (9430).
7. Loosen tube nut securing EGR tube to exhaust manifold fitting.

Removal, Left

1. Raise vehicle.
2. Remove exhaust manifold-to-exhaust pipe.
3. Remove tube nut at rear of manifold.
4. Lower vehicle.
5. Remove nuts and front lifting eye.
6. Remove engine oil dipstick tube bracket and coil bracket.
7. Remove nuts and spark plug heat shield.
8. Remove studs and bolts, left exhaust manifold and gasket.

Official Licensed Product Ford Motor Company

IN-VEHICLE SERVICE (Continued)

Exhaust Manifold

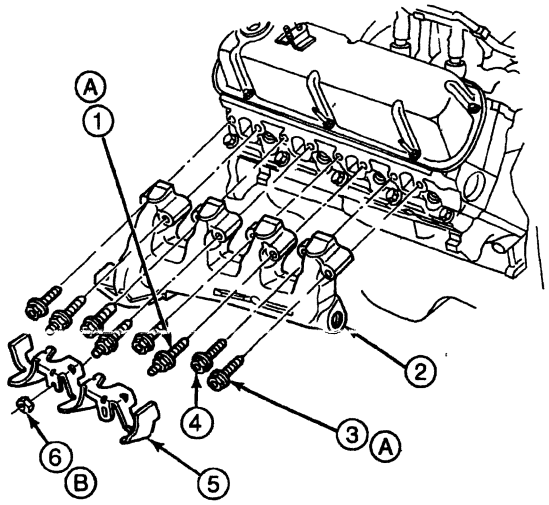

A15810-D

Item	Part Number	Description
1	388469	Stud, 2.25-Inch
2	9430	Exhaust Manifold (Right)
3	381732	Bolt, 2.25-Inch
4	382951	Bolt, 1.12-Inch
5	12A406	Spark Plug Heat Shield
6	45358	Nut (3 Req'd)
A	—	Tighten to 35-43 N·m (26-32 Lb-Ft)
B	—	Tighten to 16-24 N·m (12-18 Lb-Ft)

Front Lifting Eye

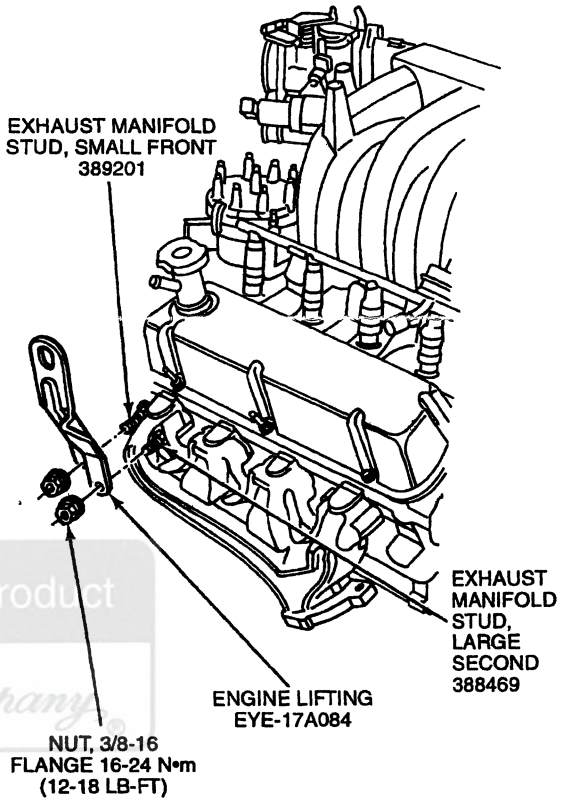

A15814-C

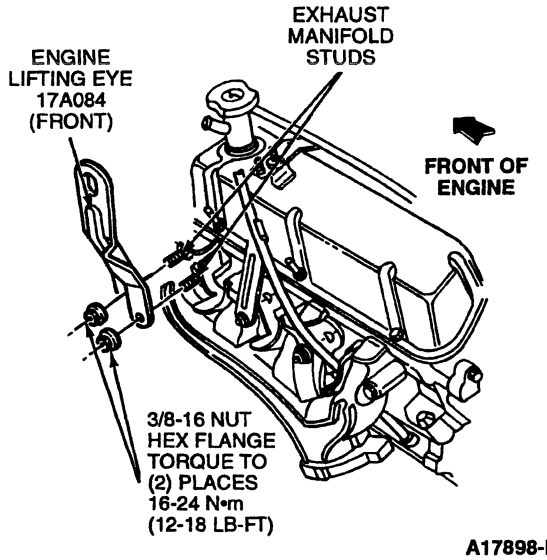

A17898-B

Official Licensed Product Ford Motor Company

IN-VEHICLE SERVICE (Continued)

Installation, Right and Left

1. Clean mating surfaces of the exhaust manifold(s) and cylinder head (6049). Clean the exhaust pipe spherical seat on the manifold(s) and the exhaust pipe(s) sealing area.
2. Inspect exhaust manifold(s) for cracks and damaged gasket surfaces. Use a straightedge to check for warped exhaust manifold cylinder head port branches. Replace unserviceable manifold(s).
3. Install left exhaust manifold, studs and bolts. Working from center to ends, tighten to 35-43 N·m (26-32 lb-ft).
4. Install left spark plug heat shield and nuts. Torque heat shield nuts to 16-24 N·m (12-18 lb-ft).
5. Install front lifting eye and nuts. Tighten to 16-24 N·m (12-18 lb-ft).
6. Install right exhaust manifold, studs and bolts. Working from center to ends, tighten to 35-43 N·m (26-32 lb-ft).

Exhaust Manifold

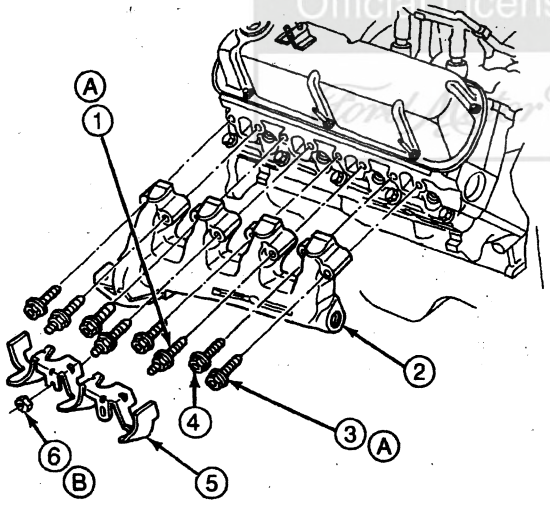

A15810-D

Item	Part Number	Description
1	388469	Stud, 2.25-Inch
2	9430	Exhaust Manifold (Right)
3	381732	Bolt, 2.25-Inch
4	382951	Bolt, 1.12-Inch
5	12A406	Spark Plug Heat Shield
6	45358	Nut (3 Req'd)
A	—	Tighten to 35-43 N·m (26-32 Lb-Ft)
B	—	Tighten to 16-24 N·m (12-18 Lb-Ft)

(Continued)

7. Install right spark plug heat shield and tighten nuts to 16-24 N·m (12-18 lb-ft).
8. Inspect EGR tube and replace if rusted through or damaged. Install valve to upper intake manifold. Tighten EGR valve studs to 18-26 N·m (13-19 lb-ft). Tighten tube-to-intake manifold fitting nut to 61-75 N·m (45-55 lb-ft).
9. Install coil bracket, transmission dipstick tube bracket and upper intake manifold support bracket. Tighten nuts to 16-24 N·m (12-18 lb-ft).
10. Raise vehicle and install exhaust pipe(s) retaining nuts. Thread one nut half-way and tighten the other to 33-49 N·m (24-36 lb-ft), then tighten the first nut to 33-49 N·m (24-36 lb-ft).
11. Lower vehicle, operate and check for leaks.

Oil Pan/Oil Pump Screen Cover and Tube

Removal

1. Remove the bolts attaching the fan shroud (8146) to the radiator (8005) and position the fan shroud over the fan assembly.
2. Remove the upper intake manifold (9424). Refer to Intake Manifold, Upper in the In-Vehicle Service portion of this section.
3. Raise vehicle.
4. Remove exhaust manifold-to-exhaust pipe.
5. Disconnect the oil cooler line at the left side of the radiator if equipped with an automatic transmission (7003).
6. Remove the nuts and lockwashers attaching the engine support insulators to the chassis bracket.
7. Drain the crankcase.
8. Loosen transmission mounting nuts.
9. Raise the engine (6007) and place wood blocks securely under the engine supports.
10. Remove the oil pan attaching bolts and lower the oil pan (6675) onto the crossmember.
11. Remove the two bolts attaching the oil pump screen cover and tube (6622) to the oil pump (6600). Remove nut attaching oil pump screen cover and tube to the number 3 main bearing cap stud. Lower the oil pump screen cover and tube into the oil pan.
12. Remove the oil pan from the vehicle.

Official Licensed Product Ford Motor Company

IN-VEHICLE SERVICE (Continued)

Installation

1. **CAUTION: Do not use solutions such as brake cleaner, carburetor cleaner, etc., as these solutions can leave a residue on the machined surfaces. Use only a cleaner which meets or exceeds Ford specification WSE-M5B392-A, such as Metal Surface Cleaner F4AZ-19A536-RA or equivalent.**

   Clean oil pan, oil pump screen cover and tube and gasket surfaces. Inspect the gasket sealing surface for damage and distortion due to overtightening of the bolts. Repair and straighten as required.
2. Position a new oil pan gasket to the cylinder blocks (6010). Apply Silicone Rubber D6AZ-19562-BA or equivalent meeting Ford specifications ESB-M4G92-A and ESE-M4G195-A to gasket surfaces as indicated.

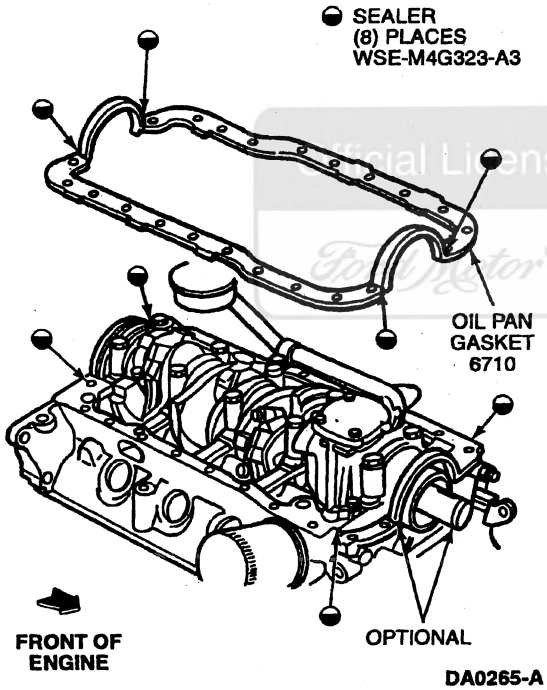

DA0265-A

3. Place the oil pump screen cover and tube inside oil pan and position assembly in place.
4. Install nuts attaching oil pump screen cover and tube to number 3 main bearing cap stud and tighten to 30-43 N·m (22-32 lb-ft).
5. Install the upper pickup tube bolts. Tighten the pickup tube bolts to 16-24 N·m (12-18 lb-ft).
6. Install oil pan retaining bolts and alternately tighten all bolts (except for the four nearest the crankshaft) to 10-14 N·m (7-10 lb-ft). Tighten four remaining bolts to 12-16 N·m (9-12 lb-ft). Refer to the following illustration.

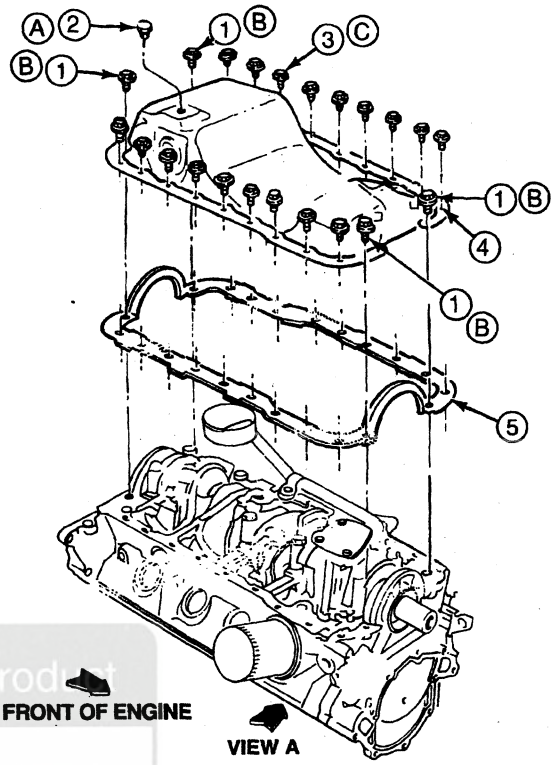

A13396-G

Item	Part Number	Description
1	390657	Bolt, 5/16-18 x 1.12
2	6730	Oil Pan Drain Plug
3	390658	Bolt, 1/4-20 x .94
4	6675	Oil Pan
5	6710	Oil Pan Gasket
A	—	Tighten to 12-16 N·m (9-12 Lb-Ft)
B	—	Tighten to 12-16 N·m (9-12 Lb-Ft)
C	—	Tighten to 10-14 N·m (7-10 Lb-Ft)

7. Install the transmission crossmember and remove jack stand.
8. Raise the engine and remove the wood blocks.
9. Lower the engine and install the insulator-to-chassis bracket nuts and washers. Tighten the nuts to 73-100 N·m (54-74 lb-ft).
10. Tighten transmission mounting nuts to proper specification. Refer to appropriate Group 07 section for specifications.
11. Install the exhaust manifold-to-exhaust pipe.

Official Licensed Product
Ford Motor Company

IN-VEHICLE SERVICE (Continued)

12. If equipped with an automatic transmission, connect the oil cooler line at the radiator. Tighten to 24-31 N·m (18-23 lb-ft).
13. Lower vehicle.
14. Install the upper intake manifold as described in this section.
15. Install the fan shroud attaching bolts. Tighten to 7-10 N·m (62-89 lb-in).
16. **CAUTION: To prevent oil from entering the PCV system during air-powered oil fills, the closure hose should be disconnected from the oil fill pipe (6A868) and positioned away from the oil source. Cover the hose port with a shop towel to prevent oil from spilling onto the engine during oil fill. Reconnect the closure hose after the oil has been filled to the proper level.**

    Fill the crankcase with the proper grade and quantity of engine oil. Check oil level. Start the engine and operate it until it reaches normal operating temperature, then check for leaks.

Oil Pump

Removal

1. Remove the oil pan (6675).
2. Remove the oil pump screen cover and tube (6622).
3. Remove the oil pump attaching bolts and oil pump intermediate shaft (6A618).

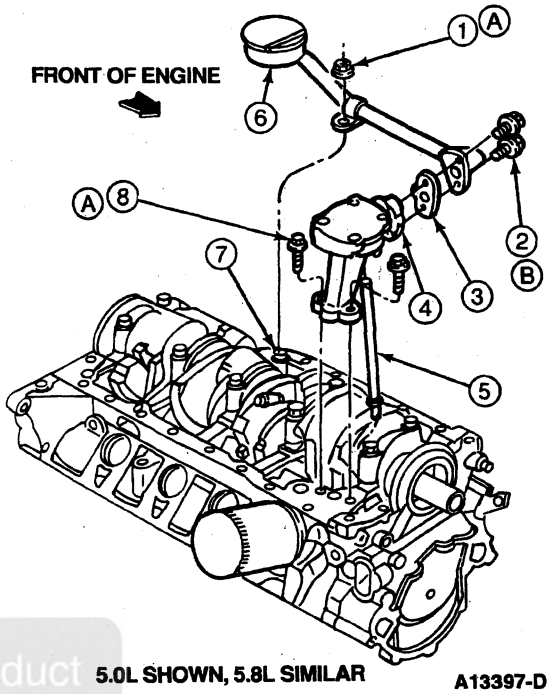

5.0L SHOWN, 5.8L SIMILAR A13397-D

Item	Part Number	Description
1	33771	Nut, 3/8-16
2	391378	Screw and Washer, 5/16-18 x 1.13
3	6626	Oil Pump Inlet Tube Gasket
4	6600	Oil Pump
5	6A618	Oil Pump Intermediate Shaft
6	6622	Oil Pump Screen Cover and Tube
7	—	Third Main (Reference Part of 6010)
8	57647	Bolt
A	—	Tighten to 30-43 N·m (22-32 Lb-Ft)
B	—	Tighten to 14-20 N·m (10-15 lb-ft)

Installation

1. Prime the oil pump (6600) by filling the inlet port with engine oil. Rotate the oil pump intermediate shaft to distribute the oil within the pump body.
2. Position the oil pump intermediate shaft into the distributor socket. With the oil pump intermediate shaft firmly seated in the distributor socket, the stop on the oil pump intermediate shaft should touch the roof of the crankcase. Remove the oil pump intermediate shaft and position the stop as necessary.

Official Licensed Product Ford Motor Company

IN-VEHICLE SERVICE (Continued)

3. NOTE: Do not attempt to force the oil pump into position if it will not seat readily. The oil pump intermediate shaft may be misaligned with the distributor shaft. To align, rotate the oil pump intermediate shaft into a new position.

   With the stop properly positioned, insert the oil pump intermediate shaft into the oil pump. Install the oil pump and oil pump intermediate shaft as an assembly. Tighten the oil pump attaching screws to 30-43 N·m (22-32 lb-ft).
4. Clean the oil pump screen cover and tube. Position assembly in place with a new gasket. Install attaching bolts and tighten 14-20 N·m (10-15 lb-ft).
5. Install the oil pan.

Crankshaft Main Bearings

The main bearing inserts are selective fit. Refer to Section 03-00.

Removal

1. Drain the crankcase. Remove the oil level dipstick (6750). Remove the oil pan (6675)and related parts.
2. Remove the oil pump screen cover and tube (6622) and the oil pump (6600).
3. Replace one crankshaft main bearing (6333) at a time, leaving the other crankshaft main bearings securely fastened. Remove the main bearing cap to which new crankshaft main bearings are to be installed.
4. Insert Main Bearing Insert Tool TOOL-6331-E in the oil hole in the crankshaft (6303).
5. Rotate the crankshaft in the direction of engine rotation to force the crankshaft main bearing out of the cylinder blocks (6010) .
6. Clean each crankshaft journal. Inspect the journals and thrust faces (thrust bearing) for nicks, burrs or bearing pickup that would cause premature crankshaft main bearing wear.
7. If the rear crankshaft main bearing is being replaced, remove and discard the crankshaft rear oil seal (6701).

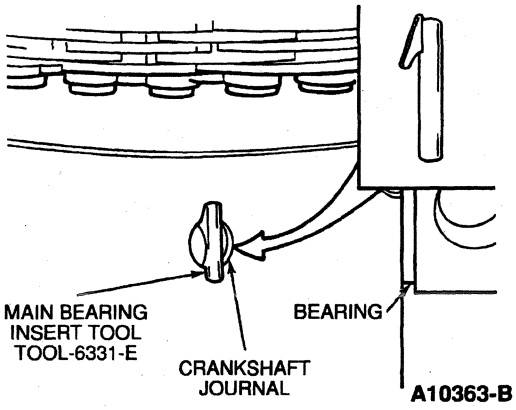

Installation

1. To install an upper crankshaft main bearing, place the plain end of the crankshaft main bearing over the shaft on the locking tang side of the block and partially install the crankshaft main bearing so that Main Bearing Insert Tool TOOL-6331-E can be inserted in the oil hole in the crankshaft. With Main Bearing Insert Tool TOOL-6331-E in the hole in the crankshaft, rotate the crankshaft in the opposite direction of engine rotation until the crankshaft main bearing seats itself. Remove the tool.
2. Install the bearing cap.
3. Select-fit the bearing for proper clearance. Refer to Section 03-00.
4. If the crankshaft main bearing is being replaced on journal number 1, 2 or 4, apply a coat of Engine Assembly Lubricant D9AZ-19579-D or equivalent meeting Ford specification ESR-M99C80-A to the journal and crankshaft main bearings and install the bearing cap. Tighten the cap bolts to 129-142 N·m (95-105 lb-ft).

Official Licensed Product

IN-VEHICLE SERVICE (Continued)

5. NOTE: Join components within 15 minutes of applying specified bead size of silicone rubber.

   Before replacing rear main cap, apply a 1.58-mm (1/16-inch) diameter bead of Silicone Rubber D6AZ-19562-BA or equivalent meeting Ford specification ESB-M4G92-A in shaded area of cylinder block as shown.

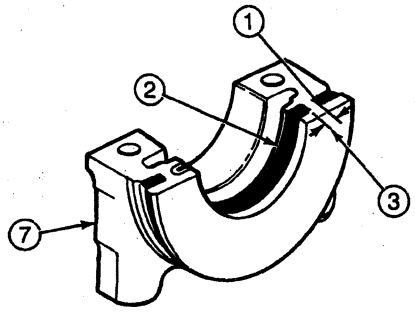

**SEALER APPLICATION SKETCH
SPLIT LIP TYPE SEAL SHOWN
BASIC APPLICATION AREAS FOR
OTHER SEAL INSTALLATIONS
ARE THE SAME**

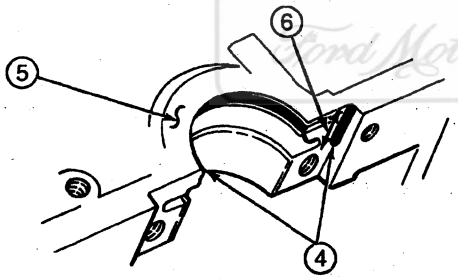

A3724-J

Item	Part Number	Description
1	—	Apply 1.58-mm (1.16-In.) Dia. Bead of Silicone Rubber D6AZ-19562-BA or Equivalent Meeting Ford Specifications ESB-M4G92-A and ESE-M4G195-A As Indicated on Bearing Cap (Both Sides)
2	—	Seal Groove
3	—	Leave 3.10-mm (1/8-In.) Gap for Sealer Expansion
4	—	1.58-mm (1/16-In.) Dia. Bead of Silicone Rubber D6AZ-19562-BA or Equivalent Meeting Ford Specifications ESB-M4G92-A and ESE-M4G92-A
5	6010	Cylinder Blocks
6	—	From Forward Face of Slinger Groove to Rear Face of Block
7	6333	Crankshaft Main Bearing

(Continued)

6. Lubricate the journal with Engine Assembly Lubricant D9AZ-19579-D or equivalent meeting Ford specification ESR-M99C80-A and install the rear main bearing cap. Tighten the cap bolts to 129-142 N·m (95-105 lb-ft).
7. If the thrust bearing cap (No. 3 main bearing) has been removed, install it as follows:

   Lubricate the journal with Engine Assembly Lubricant D9AZ-19579-D or equivalent meeting Ford specification ESR-M99C80-A and install the thrust bearing cap with the bolts finger-tight. Pry the crankshaft forward against the thrust surface of the upper half of the thrust bearing. Hold the crankshaft cap to the rear. This will align the thrust surfaces of both halves of the crankshaft thrust main bearing (6337). Retain the forward pressure on the crankshaft. Tighten the cap bolts to 129-142 N·m (95-105 lb-ft).
8. Install a new crankshaft rear oil seal.
9. Force crankshaft toward the rear of the engine (6007).
10. Check crankshaft end play. Refer to Section 03-00.

Ford Motor Company Proprietary Licensed Product

IN-VEHICLE SERVICE (Continued)

Thrust Bearing Cap, Installation

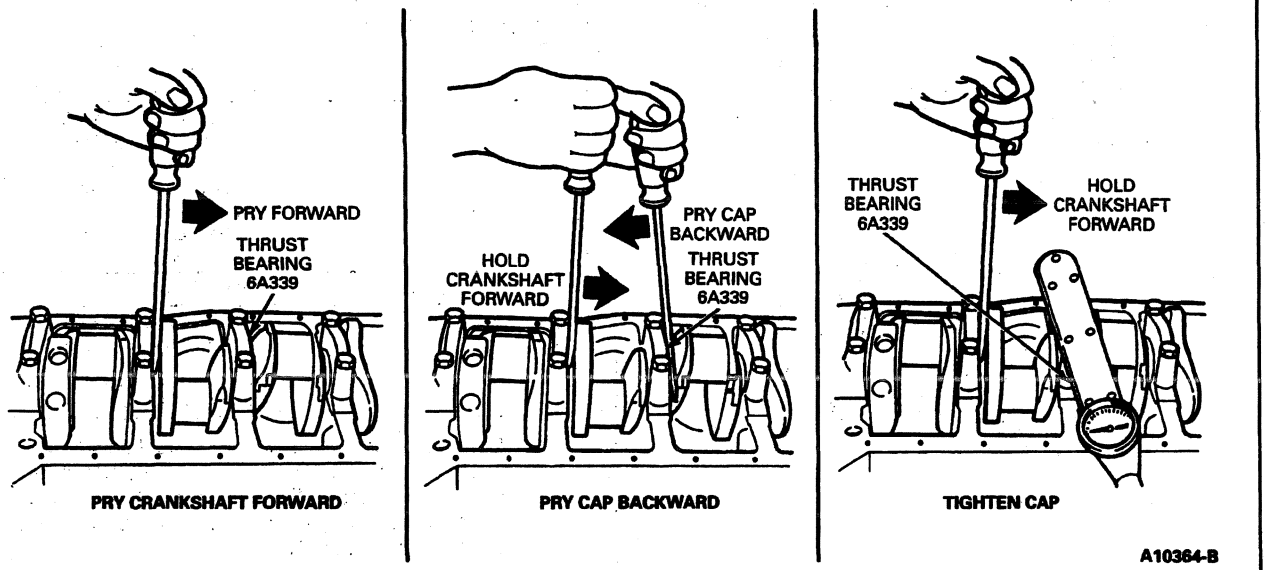

11. Clean the oil pump screen cover and tube. Prime the oil pump by filling the inlet opening with oil and rotating the oil pump intermediate shaft (6A618) until oil emerges from the outlet opening. Install the oil pump and oil pump screen cover and tube.
12. Position the oil pan gaskets on the oil pan. Install the oil pan and related parts. Install the oil level dipstick.
13. **CAUTION: To prevent oil from entering the PCV system during air-powered oil fills, the closure hose should be disconnected from the oil fill pipe (6A868) and positioned away from the oil source. Cover the hose port with a shop towel to prevent oil from spilling onto the engine during oil fill. Reconnect the closure hose after the oil has been filled to the proper level.**

    Fill the crankcase with the proper grade and quality of engine oil. Start the engine and check for oil pressure. Operate the engine at fast idle and check for oil leaks.

Pistons and Connecting Rods

Removal

1. Drain the cooling system. Refer to Section 03-03. Drain the crankcase. Remove the intake manifold (9424), cylinder heads (6049), oil pan (6675) and oil pump (6600) as outlined.
2. Remove any ridges and/or deposits from the upper end of the cylinder bores as follows.

    Turn the crankshaft (6303) until the piston (6108) to be removed is at the bottom of its travel, then place a cloth on the piston head to collect the cuttings. Remove the cylinder ridge with a ridge cutter. Follow the instructions furnished by the tool manufacturers. Never cut into the ring travel area in excess of 0.794 mm (1/32 inch) when removing ridges.
3. **CAUTION: Connecting rod caps must be installed in their original locations.**

    Make sure all connecting rod caps are marked so that they can be installed in their original positions.
4. Turn the crankshaft until the connecting rod being removed is down.
5. Remove the connecting rod nuts and cap.
6. Push the connecting rod and piston assembly out the top of the cylinder with the handle end of a hammer. Avoid damage to the crankshaft journal or the cylinder wall when removing the piston and rod assembly.
7. Remove the bearing inserts from the connecting rods and caps.

Installation

1. If new piston rings are to be installed, remove the cylinder wall glaze. Refer to Section 03-00. The small depression on the ring designates the top.
2. Install rings using a piston ring installation tool of the proper size.

IN-VEHICLE SERVICE (Continued)

3. NOTE: Be sure to install the pistons in the same cylinders from which they were fitted.

   Oil the piston rings, pistons and cylinder walls with recommended quality engine oil. The connecting rod and bearing caps are numbered from 1 to 4 in the right bank and from 5 to 8 in the left bank, beginning at the front of the engine (6007). The numbers on the connecting rod and bearing cap must be on the same side when installed in the cylinder bore. If a connecting rod is ever transferred from one cylinder blocks (6010) or cylinder to another, new connecting rod bearings (6211) should be fitted and the connecting rod should be numbered to correspond with the new cylinder number. When installing the piston and connecting rod assembly, the largest chamfer at the bearing end of the rod should be positioned toward the crank pin thrust face of the crankshaft.

4. Make sure the ring gaps (oil ring spacer-A, oil ring-B, compression ring-C) are properly spaced around the circumference of the piston.

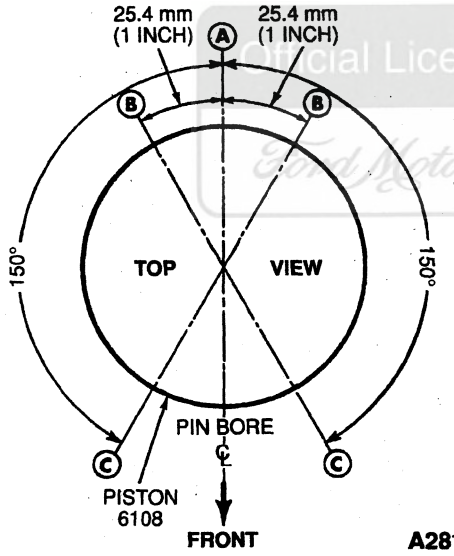

A2811-C

5. NOTE: Replacement pistons are slightly lighter in weight. Pistons must be replaced as a complete set to avoid the introduction of torsional vibration to the engine.

   Install Piston Ring Compressor D81L-6002-C or equivalent on the piston and push the piston in with a hammer handle until it is slightly below the top of the cylinder. Be sure to guide the connecting rods to avoid damaging the crankshaft journals. Install the piston with the indentation notch in the piston head toward the front of the engine.

6. Install connecting bearings and check the clearance of each connecting rod bearing. Refer to Section 03-00.
7. After the connecting rod bearings have been fitted, apply a light coat of recommended engine oil to the journals and connecting rod bearings.
8. Turn the crankshaft throw to the bottom of its stroke. Push the piston all the way down until the connecting rod bearing seats on the crankshaft journal.
9. Install the connecting rod cap. Tighten the nuts to 54-61 N·m (40-45 lb-ft).
10. After the piston and connecting rod assemblies have been installed, use a feeler gauge to check the side clearance between the connecting rods on each shaft journal.

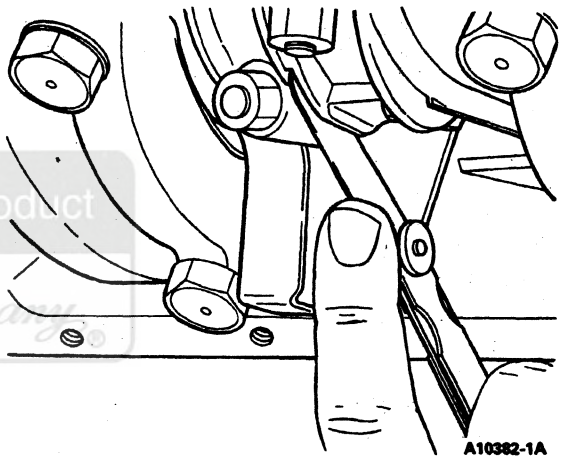
A10382-1A

11. Disassemble, clean, and assemble the oil pump. Clean the oil pump screen cover and tube (6622) and the oil pan and block gasket surfaces.
12. Prime the oil pump by filling the inlet port with engine oil of the quality recommended in the Owner Guide and rotating the oil pump intermediate shaft (6A618) to distribute the oil within the housing. Install the oil pump and the oil pan.
13. Install the cylinder heads. Refer to Cylinder Head(s) in the In-Vehicle Service portion of this section.
14. Install accessory drive brackets with generator (GEN)(10300), secondary air injection pump (AIR pump)(9A486), air conditioning compressor, and power steering pump (3A674) and connect hoses and electrical connections.
15. Install the intake manifold.

Official Licensed Product Ford Motor Company

IN-VEHICLE SERVICE (Continued)

16. **CAUTION: To prevent oil from entering the PCV system during air-powered oil fills, the closure hose should be disconnected from the oil fill pipe (6A868) and positioned away from the oil source. Cover the hose port with a shop towel to prevent oil from spilling onto the engine during oil fill. Reconnect the closure hose after the oil has been filled to the proper level.**

    Fill and bleed the cooling system. Refer to Section 03-03. Fill the crankcase with the proper quality and quantity of engine oil as recommended in the Owner Guide.
17. Start the engine, then check and adjust the ignition timing.
18. Operate the engine at fast idle and check for oil and coolant leaks. Operate the engine until engine temperatures have stabilized.
19. Install the engine air cleaner (ACL)(9600) and air cleaner outlet tube (9B659) assembly, including the crankcase ventilation tube (6758).

Connecting Rod Bearings

The connecting rod bearings (6211) are selective fit. Refer to Section 03-00.

Removal

1. Drain the crankcase. Remove the oil level dipstick (6750). Remove the oil pan (6675) and related parts.
2. Remove the oil pump screen cover and tube (6622) and the oil pump (6600).
3. Turn the crankshaft (6303) until the connecting rod to which new connecting rod bearings are to be fitted is down.

    Remove the connecting rod cap. Remove the bearing inserts from the rod and cap.

Installation

1. Be sure the bearing inserts and the bearing bore in the connecting rod and cap are clean. Foreign material under the inserts will distort the connecting rod bearing and cause a failure.
2. Clean the crankshaft journal.
3. Install the bearing inserts in the connecting rod and cap with the tangs fitting in the slots provided.
4. Pull the connecting rod assembly down firmly on the crankshaft journal.
5. Select fit the connecting rod bearing. Refer to Section 03-00.
6. Clean and apply a coat of Engine Assembly Lubricant D9AZ-19579-D or equivalent meeting Ford specification ESR-M99C80-A to the journal and connecting rod bearings. Install the connecting rod cap. Tighten the nuts to 54-61 N·m (40-45 lb-ft).
7. Repeat the procedure for the remaining connecting rods that require new connecting rod bearings.
8. Clean the oil pump screen cover and tube. Prime the oil pump by filling the inlet opening with oil and rotating the oil pump intermediate shaft (6A618) until oil emerges from the outlet opening. Install the oil pump and oil pump screen cover and tube.
9. Position the oil pan gasket on the cylinder blocks (6010). Install the oil pan and related parts. Install the oil level dipstick.
10. **CAUTION: To prevent oil from entering the PCV system during air-powered oil fills, the closure hose should be disconnected from the oil fill pipe (6A868) and positioned away from the oil source. Cover the hose port with a shop towel to prevent oil from spilling onto the engine during oil fill. Reconnect the closure hose after the oil has been filled to the proper level.**

    Fill the crankcase with engine oil of the quality and quantity recommended in the Owner Guide. Start the engine (6007) and check for oil pressure. Operate the engine at fast idle and check for oil leaks.

Flywheel

Removal

1. On a vehicle with a manual transmission (7003), remove the transmission and flywheel housing, clutch pressure plate (7563) and clutch disc (7550). Refer to Group 08.

    On a vehicle with an automatic transmission, remove the transmission. Refer to Group 07.
2. To check flywheel face runout or to replace a flywheel ring gear for a manual transmission, refer to Section 03-00.

Official Licensed Product Ford Motor Company

IN-VEHICLE SERVICE (Continued)

3. Remove the flywheel attaching bolts and remove the flywheel (6375).

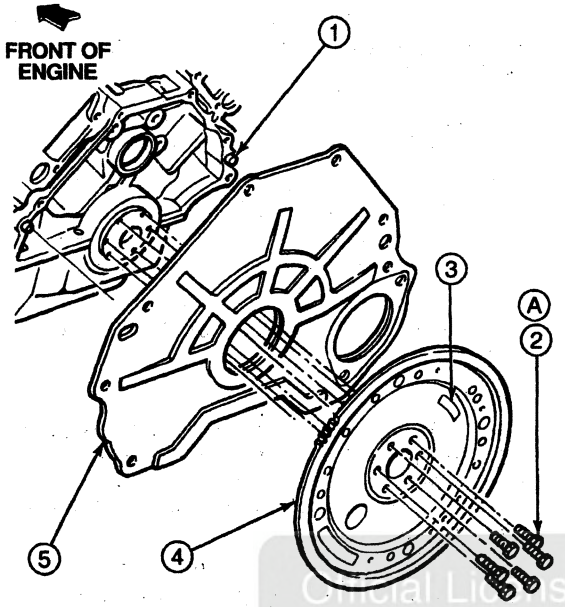

A13399-D

Item	Part Number	Description
1	—	Dowel (2 Places) (Part of 6007)
2	—	Bolt (6 Places) (Apply Pipe Sealant with Teflon® D8AZ-19554-A or Equivalent Meeting Ford Specification WSK-M2G350-A2 or ESR-M18P7-A to Fasteners Prior to Assembly) (Part of 6375)
3	—	Automatic Transmission Usage Identification (Part of 6375)
4	6375	Flywheel
5	7007	Engine Rear Plate
A	—	Tighten to 102-115 N·m (75-85 Lb-Ft)

Installation

1. Coat the threads of the flywheel attaching bolts with oil-resistant Threadlock® and Sealer EOAZ-19554-AA or equivalent meeting Ford specification WSK-M2G315-A5 (Type II). Position the flywheel on the crankshaft flange. Install and tighten the bolts in sequence across from each other to 102-115 N·m (75-85 lb-ft).
2. On a vehicle with a manual transmission, check the flywheel runout. Refer to Section 03-00. Install the clutch pressure plate, clutch disc and the transmission and flywheel housing. Refer to Group 08.

   On a vehicle with an automatic transmission, check the flywheel runout. Refer to Section 03-00. Install the transmission. Refer to Group 07.

Crankshaft Rear Oil Seal

SPECIAL SERVICE TOOL(S) REQUIRED

Description	Tool Number
Rear Oil Seal Replacer	T89T-6701-AH
Rear Crankshaft Seal Remover	T95P-6701-EH

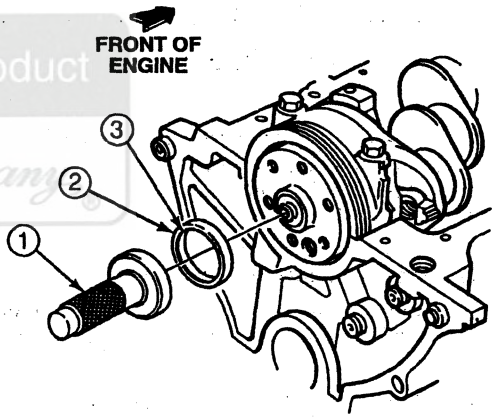

DA0976-A

Item	Part Number	Description
1	T89T-6701-AH	Rear Oil Seal Replacer
2	6701	Crankshaft Rear Oil Seal
3	—	Metallic Side of Seal

Removal

1. Remove the transmission (7003) as outlined in Group 07.
2. If equipped with manual transmission, remove clutch assembly as outlined in Section 08-01.
3. Remove flywheel attaching bolts and remove rear cap (main bearing) and flywheel (6375).
4. Remove the crankshaft rear oil seal (6701) with the rear crankshaft seal remover T95P-6701-EH.

Official Licensed Product Ford Motor Company

IN-VEHICLE SERVICE (Continued)

5. Clean the oil seal recess in the cylinder blocks (6010) and main bearing cap. Inspect and clean the oil seal contact surface on the crankshaft (6303).

Installation

1. Coat the oil seal-to-cylinder block surface of the crankshaft rear oil seal with oil XO-5W30-QSP or DSP or equivalent meeting Ford specification ESE-M2C153-E. Coat the seal contact surface of the crankshaft rear oil seal and crankshaft with heavy SG engine oil. Remove pilot bearing. Place crankshaft rear oil seal on Rear Oil Seal Replacer T89T-6701-AH and, using hammer, tap into place until tool contacts face of cylinder blocks or bearing cap.
2. Install flywheel. Tighten flywheel attaching bolts. Tighten bolts to 102-115 N·m (75-85 lb-ft).
3. If so equipped, install clutch. Refer to Section 08-01.
4. Install transmission. Refer to appropriate Group 07 section.

Camshaft Rear Bearing Cover

Removal

1. On a vehicle with a manual transmission (7003) remove the transmission, flywheel housing, clutch pressure plate (7563) and clutch disc (7550). Refer to Group 08.

   On a vehicle with an automatic transmission, remove the transmission. Refer to Group 07.
2. Remove the flywheel attaching bolts and remove the flywheel (6375). Remove the engine rear plate (7007).
3. Replace the camshaft rear bearing cover (6266). Refer to Section 03-00.

Installation

1. Coat the flywheel attaching bolts with oil-resistant Threadlock® and Sealer EOAZ-19554-AA or equivalent meeting Ford specification WSK-M2G315-A5 (Type II). Install engine rear plate. Install flywheel. Install and tighten the attaching bolts in sequence, across from each other to 102-115 N·m (75-85 lb-ft).
2. On a vehicle with a manual transmission, install the clutch pressure plate, clutch disc, transmission, and the flywheel housing. Refer to Group 08.
3. On a vehicle with an automatic transmission, install the transmission. Refer to Group 07.

Oil Filter/Adapter/Oil Cooler

Removal

1. Position a drip pan under the oil filter.
2. Unscrew the oil filter from the oil cooler mounting bolt insert (6L626) using an Oil Filter Wrench D79L-6731-A or -B or equivalent and clean the oil cooler mounting bolt insert.

   Unscrew the oil filter from the oil cooler mounting bolt insert, turn it horizontal and let the excess oil drain off. Slide the oil filter toward the rear of the vehicle and remove. Some effort may be required to slide the oil filter between the engine crossmember and power steering hoses.
3. If it is necessary to remove the oil cooler, drain the cooling system. Refer to Section 03-03. Disconnect coolant lines from oil cooler adapter.
4. Remove oil filter mounting adapter bolt and O-ring.
5. Remove oil cooler mounting bolt insert and oil cooler.

Installation

1. **CAUTION: Make sure gasket from removed oil filter has not stuck to the oil cooler mounting bolt insert. Wipe oil cooler mounting bolt insert clean prior to installing new oil filter.**

   Coat the gasket on a new oil filter with recommended quality engine oil. Place the new oil filter in position on the oil cooler mounting bolt insert.
2. Hand-tighten the oil filter until the gasket makes contact and then advance it one-half turn.
3. NOTE: Be sure O-ring for oil filter adapter mounting bolt is positioned properly before bolt installation.

   If oil cooler was removed, reverse removal procedure to install. Fill and bleed cooling system. Refer to Section 03-03.
4. **CAUTION: To prevent oil from entering the PCV system during air-powered oil fills, the closure hose must be disconnected from the oil fill pipe (6A868) and positioned away from the oil source. Cover the hose port with a shop towel to prevent oil from spilling onto the engine during oil fill. Reconnect the closure hose after the oil has been filled to the proper level.**

   Check the oil level and fill the crankcase with engine oil of the quality recommended in the Owner Guide as necessary.
5. Operate the engine (6007) at fast idle and check for oil leaks. If oil leaks are evident, perform the necessary service to correct the leakage. Remove the drip pan.

Oil Level Indicator Tube

Removal

1. Drain the crankcase.
2. Remove oil level dipstick (6750) from oil level indicator tube (6754).

Official Licensed Product

IN-VEHICLE SERVICE (Continued)

3. Remove nut from oil level indicator tube bracket and exhaust manifold stud. Remove oil level indicator tube from cylinder blocks (6010).

Installation

1. Apply Pipe Sealant with Teflon® D8AZ-19554-A or equivalent meeting Ford specifications WSK-M2G350-AZ and ESR-M18P7-A around the periphery of the oil level indicator tube on the cylinder blocks installation.
2. Insert loose fit oil level indicator tube into the cylinder blocks with a rotational movement.
3. Install 3/8-16 nut on oil level indicator tube bracket to exhaust manifold stud.
4. Tighten nut to 16-24 N·m (12-18 lb-ft).
5. Install oil level dipstick in oil level indicator tube.
6. **CAUTION: To prevent oil from entering the PCV system during air-powered oil fills, the closure hose must be disconnected from the oil fill pipe (6A868) and positioned away from the oil source. Cover the hose port with a shop towel to prevent oil from spilling onto the engine during oil fill. Reconnect the closure hose after the oil has been filled to the proper level.**

   Fill crankcase.

Sensor, Oil Pressure Sender/Switch

Removal

1. Remove oil filter with Oil Filter Wrench D79L-6731-A or D79L-6731-B or equivalent.
2. Remove the oil cooler mounting bolt insert (6L626), oil cooler (6A642) and oil cooler adapter.
3. Remove oil pressure sensor (9278) from cylinder blocks (6010).

Installation

1. Install oil pressure sensor in cylinder blocks. Tighten to 11-24 N·m (8-18 lb-ft).
2. Install oil cooler and oil cooler mounting bolt insert to cylinder blocks. Tighten to 54-61 N·m (40-45 lb-ft).
3. NOTE: Make sure to properly position the O-ring on the oil filter adapter mounting bolt. Apply a light film of petroleum jelly or SAE 50 oil to the O-ring to hold it in place and position in the groove on the oil cooler prior to tightening the mounting bolt.

   Install oil filter adapter to oil cooler. Tighten to 3-6 N·m (27-53 lb-in).
4. Prior to installation of oil filter, apply a light film of 5W30 motor oil on the oil filter gasket.
5. Install oil filter with Oil Filter Wrench D79L-6731-A or D79L-6731-B or equivalent. Turn 1/2 turn after gasket contact. Tighten to (optional) 11-14 N·m (8-10 lb-ft).

REMOVAL AND INSTALLATION

Engine

SPECIAL SERVICE TOOL(S) REQUIRED

Description	Tool Number
Engine Lifting Brackets	T70P-6000

Removal

1. Disconnect battery (10655).
2. Drain cooling system. Refer to Section 03-03.
3. Remove hood (16612).
4. Remove jack handle and air intake duct.
5. Remove radiator (8005). Refer to Section 03-03.
6. Remove fan fan shroud (8146).
7. Discharge A/C system. Refer to Section 12-00 in the Body, Chassis Manual.
8. Remove serpentine belt. Refer to Section 03-05.
9. Remove fan blade (8600).
10. Remove upper intake manifold (9424). Refer to Intake Manifold, Upper in In-Vehicle Service portion of this section.
11. Disconnect heater water hoses (18472) from water pump (8501).
12. Remove retaining bolt and water pump heater brackets from generator (GEN)(10300).
13. Disconnect electrical connectors from generator.
14. Disconnect two hoses from air pump.
15. Disconnect vacuum lines.
16. Relieve fuel pressure. Refer to Section 03-04A.
17. Remove retaining bolts for generator and air pump brackets.
18. Disconnect ground cables from engine block.
19. Disconnect electrical connectors from A/C.
20. Disconnect A/C manifold lines from A/C compressor (19703).
21. Disconnect power steering hoses from power steering pump (3A674).
22. Remove A/C and power steering bracket.
23. Disconnect electrical block from left fender.
24. Disconnect fuel lines.
25. Raise vehicle on hoist and remove starter motor (11001). Refer to Section 03-06A.
26. Remove exhaust manifold-to-exhaust pipe nuts.
27. For manual transmissions, remove clutch housing-to-engine bolts or for automatic transmissions, remove torque converter housing-to-engine bolts.
28. Remove motor mount nuts.
29. Lower vehicle.
30. Install Engine Lifting Brackets T70P-6000.
31. Using suitable lifting device, remove engine (6007) from vehicle.
32. Mount engine on suitable bench or stand.

Official Licensed Product
Ford Motor Company

REMOVAL AND INSTALLATION (Continued)

Installation

1. Follow removal procedure in reverse order. Tighten clutch housing-to-engine bolts for manual transmissions or torque converter housing-to-engine bolts for automatic transmissions to 55-67 N·m (41-49 lb-ft). Tighten fan shroud bolts to 7-10 N·m (62-89 lb-in). Tighten exhaust manifold-to-exhaust inlet pipe nuts to 35-45 N·m (26-33 lb-ft). Tighten engine mount nuts to 73-100 N·m (54-74 lb-ft). To install starter motor, refer to Section 03-06A.
2. Refill cooling system. Refer to Section 03-03.
3. NOTE: When the battery has been disconnected and reconnected, some abnormal drive symptoms may occur while the powertrain control module (PCM)(12A650) relearns its adaptive strategy. The vehicle may need to be driven 16 km (10 miles) or more to relearn the strategy.

   Reconnect battery.

Camshaft Bearings

NOTE: Camshaft bearings (6261) are available prefinished to size for standard and 0.38 mm (0.015 inch) undersize journal diameters. The camshaft bearings are not interchangeable from one bore to another.

SPECIAL SERVICE TOOL(S) REQUIRED

Description	Tool Number
Camshaft Bearing Set	T65L-6250-A

Removal

1. Remove engine (6007) from vehicle. Refer to Engine in Removal and Installation portion of this section.
2. Remove the camshaft (6250), flywheel (6375) and crankshaft (6303). Push the pistons (6108) to the top of the cylinders.
3. Remove rear bearing bore plug.
4. Select the proper size expanding collet and backup nut and assemble on the expanding mandrel Camshaft Bearing Set T65L-6250-A.
5. With the expanding collet collapsed, install the collet assembly in the camshaft bearing, and tighten the backup nut on the expanding mandrel until the collet fits the camshaft bearing.
6. Assemble the puller screw and extension (if necessary) and install on the expanding mandrel. Wrap a cloth around the threads of the puller screw to protect the front bearing or journal. Tighten the pulling nut against the thrust bearing and pulling plate to remove the camshaft bearing. Make sure to hold a wrench on the end of the puller screw to prevent it from turning.
7. Repeat the procedure for each camshaft bearing. To remove the front bearing, install the puller screw from the rear of the cylinder blocks (6010).

Camshaft Bearings

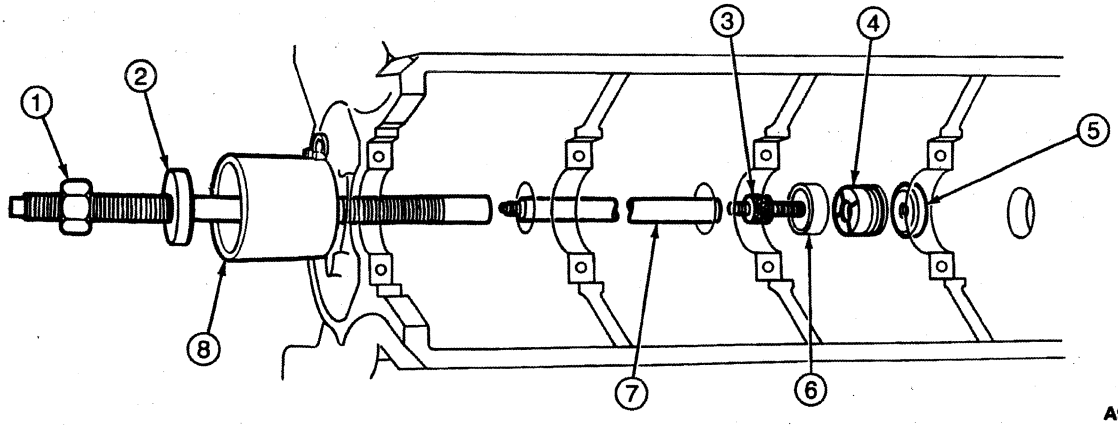

A9045-D

Item	Part Number	Description
1	—	Pulling Screw
2	—	Pulling Plate
3	—	Expanding Mandrel

(Continued)

Item	Part Number	Description
4	—	Expanding Collet
5	—	Backup Nut

(Continued)

REMOVAL AND INSTALLATION (Continued)

Item	Part Number	Description
6	—	Bearing, Camshaft (Part Number Given Is for Reference Only)
7	—	Puller Screw Extension

(Continued)

Item	Part Number	Description
8	—	Front Spacer NOTE: All Items Except No. 6 (Bearing) Are Included in Camshaft Bearing Set T65L-6250-A

Installation

1. Position the new camshaft bearing at the bearing bores with the oil holes aligned and press them in place with the Camshaft Bearing Set T65L-6250-A. Be sure to center the pulling plate and puller screw to avoid damage to the camshaft bearing. Failure to use the correct expanding collet can cause severe camshaft bearing damage. Make sure the front camshaft bearing is installed 0.127-0.508 mm (0.005-0.020 inches) below the front face of the cylinder blocks.

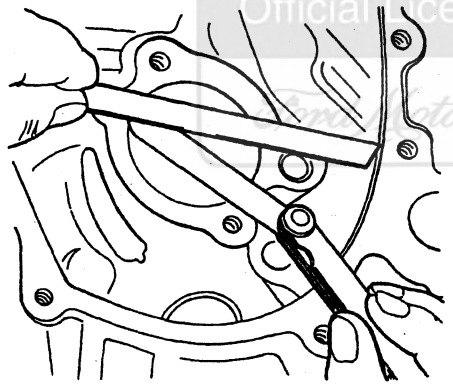

A10385-B

2. Install a new rear bearing bore plug.
3. Install the camshaft, crankshaft, flywheel and related parts. Do not check connecting rod and main bearing clearances as a part of camshaft bearing replacement. Install the engine in the vehicle.

Crankshaft

SPECIAL SERVICE TOOL(S) REQUIRED

Description	Tool Number
Spark Plug Wire Remover	T74P-6666-A
Clutch Housing Alignment Tool	T75L-6392-A

Removal

1. With the engine (6007) removed from the vehicle and placed in a workstand, disconnect the distributor to spark plug wires (12286) at the spark plugs (12405) and remove the wires and bracket assembly from the attaching stud on the valve covers (6582) using Spark Plug Wire Remover T74P-6666-A. Disconnect the ignition coil to distributor high tension wiring (12298) at the ignition coil (12029). Remove the distributor cap (12106) and distributor to spark plug wires as an assembly. Remove the spark plugs to allow easy rotation of the crankshaft (6303).
2. Drain the crankcase.
3. Remove the oil filter. Slide the water pump bypass hose clamp toward the water pump (8501). Remove the generator (GEN)(10300) and mounting brackets.
4. Remove the crankshaft pulley (6312) from the crankshaft vibration damper / pulse ring. Remove the capscrew and washer from the end of the crankshaft. Install Gear and Pulley Puller D80L-522-A or equivalent on the crankshaft vibration damper / pulse ring and remove the crankshaft vibration damper / pulse ring.
5. Remove the engine front cover (6019) and water pump as an assembly.
6. Check the timing chain deflection. Then, remove the timing chain / belt (6268) and sprockets. Refer to Timing Chains and Sprockets in the In-Vehicle Service portion of this section.
7. Invert the engine on the workstand. Remove the clutch pressure plate (7563) and clutch disc (7550) (manual shift transmission). Remove the flywheel (6375) and engine rear plate (7007). Remove the oil pan (6675) and gasket. Remove the oil pump (6600).
8. NOTE: Make sure all bearing caps (main and connecting rod) are marked so that they can be installed in their original locations.

   Turn the crankshaft until the connecting rod from which the cap is being removed is down, and remove the bearing cap. Push the connecting rod and piston assembly up into the cylinder. Repeat this procedure until all the connecting rod bearing caps are removed.
9. Remove the main bearing caps.

Official Licensed Product Ford Motor Company

REMOVAL AND INSTALLATION (Continued)

10. **CAUTION: Handle the crankshaft with care to avoid possible fracture or damage to the finished surfaces.**

    Carefully lift the crankshaft out of the cylinder blocks (6010) so that the thrust bearing surfaces are not damaged.
11. Remove rear journal oil seal from the crankshaft.
12. Remove the main bearing inserts from the cylinder blocks and bearing caps.
13. Remove the connecting rod bearing (6211) from the connecting rods and caps.

    To refinish journals and dress minor imperfections, refer to Section 03-00.

Installation

1. If the crankshaft main bearing journals have been refinished to a definite undersize, install the correct undersize crankshaft main bearings (6333).
2. **CAUTION: Be sure the bearing inserts and bearing bores are clean. Foreign material under the inserts will distort the crankshaft main bearing and cause a failure.**

    Place the upper crankshaft main bearing inserts in position in bores with the tang fitting in the slot provided.
3. Install the lower crankshaft main bearing inserts in the bearing caps.
4. NOTE: Be careful not to damage the bearing surfaces.

    Carefully lower the crankshaft into place.
5. Check the clearance of each crankshaft main bearing. Refer to Section 03-00.
6. Apply Engine Assembly Lubricant D9AZ-19579-D or equivalent meeting Ford Specification ESR-M99C80-A to the journals and crankshaft main bearings.
7. NOTE: Apply Silicone Rubber D6AZ-19526-BA or equivalent meeting Ford specifications ESB-M4G92-A and ESE-M4G195-A in a 1.59 mm (1/16-inch) bead in each corner of rear main bearing cap saddle, the full length of the saddle.

    NOTE: Be sure that the main bearing caps are installed in their original locations.

    Install all the crankshaft main bearing caps, except the thrust bearing cap (No. 3 bearing). Tighten the bearing cap bolts to 129-142 N·m (95-105 lb-ft).
8. Install the thrust bearing cap with the bolts finger-tight.
9. Pry the crankshaft forward against the thrust surface on the upper half of the crankshaft main bearing.
10. Hold the crankshaft forward and pry the thrust bearing cap to the rear. This will align the thrust surfaces of both halves of the crankshaft thrust main bearing (6337).
11. Retain the forward pressure on the crankshaft. Tighten the cap bolts to 129-142 N·m (95-105 lb-ft).
12. Force the crankshaft toward the rear of the engine.
13. Check the crankshaft end play. Refer to Section 03-00.
14. Install new bearing inserts in the connecting rods and caps. Check the clearance of each bearing. Refer to Section 03-00.
15. Apply a light coat of recommended quality engine oil to the journals and connecting rod bearings after the connecting rod bearings have been fitted.
16. Turn the crankshaft throw to the bottom of its stroke. Push the piston (6108) all the way down until the connecting rod bearing seats on the crankshaft journal.
17. Install the connecting rod cap. Tighten the nuts to 54-61 N·m (40-45 lb-ft).
18. Using a feeler gauge to check the side clearance between the connecting rods on each connecting rod crankshaft journal after the piston and connecting rod assemblies have been installed. Refer to Specifications at the end of this section.
19. Install a new crankshaft rear oil seal (6701).
20. Install the timing chain/belt, the sprockets, engine front cover, crankshaft vibration damper/pulse ring and crankshaft pulley.
21. Coat the threads of the flywheel attaching bolts with oil-resistant Threadlock® and Sealer EOAZ-19554-AA or equivalent meeting Ford specification WSK-M2G315-A5 (Type II). Position the flywheel on the crankshaft flange. Install and tighten the bolts to 102-115 N·m (75-85 lb-ft).

    On a flywheel for manual shift transmission (7003), use Clutch Housing Alignment Tool T75L-6392-A to locate the clutch disc. Install the clutch pressure plate. Tighten the attaching bolts to 27-39 N·m (20-29 lb-ft).
22. Clean the oil pan, oil pump and oil pump screen cover and tube (6622). Prime the oil pump by filling the inlet port with engine oil and rotating the oil pump intermediate shaft (6A618) to distribute oil within the housing. Install the oil pump and oil pan.
23. Install generator and mounting bracket.
24. Install the oil filter.
25. Install the spark plugs, distributor cap and distributor to spark plug wires. Connect the distributor to spark plug wires and ignition coil to distributor high tension wiring.
26. Install the engine in the vehicle.

Licensed Product Ford Motor Company

REMOVAL AND INSTALLATION (Continued)

27. **CAUTION: To prevent oil from entering the PCV system during air-powered oil fills, the closure hose must be disconnected from the oil fill pipe (6A868) and positioned away from the oil source. Cover the hose port with a shop towel to prevent oil from spilling onto the engine during oil fill. Reconnect the closure hose after the oil has been filled to the proper level.**

    Fill crankcase.

DISASSEMBLY AND ASSEMBLY

Engine

SPECIAL SERVICE TOOL(S) REQUIRED

Description	Tool Number
Cylinder Ridge Reamer	T64L-6011-EA

Disassembly

1. NOTE: Before starting disassembly, remove all wiring harnesses, emission control system, fuel system, ignition system, flywheel (6375), engine rear plate (7007) and front end accessory drive components.

   NOTE: All valve train components should be identified to make sure they are installed in their original positions during assembly.

   With the engine (6007) mounted on a workstand, remove the left and right valve covers (6582) and discard the gaskets.
2. Remove the upper and lower intake manifold assemblies.
3. Remove the oil level dipstick and oil level indicator tube assembly and remove the oil filter.
4. Remove the rocker arms (6564), rocker arm seats (6A528), push rods (6565), rocker arm fulcrum guides (6A588) and valve tappets (6500) and remove the cylinder heads (6049).

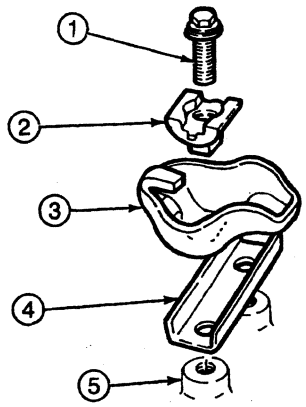

A4870-C

Item	Part Number	Description
1	390385	Attaching Bolt
2	6A528	Rocker Arm Seat
3	6564	Rocker Arm
4	6A588	Rocker Arm Fulcrum Guide
5	—	Threaded Pedestal (Part of 6049)

5. Remove the crankshaft pulley (6312) and crankshaft vibration damper / pulse ring.
6. Remove the water pump (8501) and engine front cover (6019) as an assembly. Discard the gasket and seal.
7. Remove the oil pan (6675) and discard the gasket.

DISASSEMBLY AND ASSEMBLY (Continued)

8. Remove the oil pump (6600), oil pump screen cover and tube (6622) assembly and oil pump intermediate shaft (6A618) .

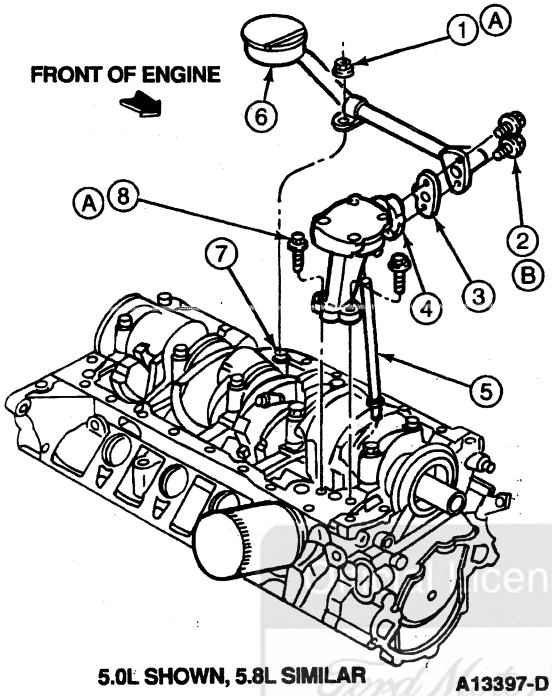

5.0L SHOWN, 5.8L SIMILAR A13397-D

Item	Part Number	Description
1	33771	Nut, 3/8-16
2	391378	Screw and Washer, 5/16-18 x 1.13
3	6626	Oil Pump Inlet Tube Gasket
4	6600	Oil Pump
5	6A618	Oil Pump Intermediate Shaft
6	6622	Oil Pump Screen Cover and Tube (Typical)
7	—	Third Main (Part of 6010)
8	57647	Bolt
A	—	Tighten to 30-43 N·m (22-32 Lb-Ft)
B	—	Tighten to 16-24 N·m (12-18 Lb-Ft)

9. Remove the crankshaft rear oil seal (6701). Refer to Crankshaft Rear Oil Seal in the In-Vehicle Service portion of this section.
10. Remove the camshaft sprocket, capscrew, washer and eccentric or timing flag. Slide the sprocket and timing chain/belt (6268) forward and remove the timing chain/belt and sprocket as an assembly.
11. Remove the camshaft thrust plate (6269) and remove the camshaft (6250).
12. NOTE: Pistons (6108), connecting rods and bearings should be numbered to make sure they are assembled in their original positions.

    NOTE: Before removing pistons inspect the top of the cylinder bores. If necessary, remove the ridge and/or carbon deposits from each cylinder using Cylinder Ridge Reamer T64L-6011-EA.

    Remove the connecting rod caps and remove the piston.

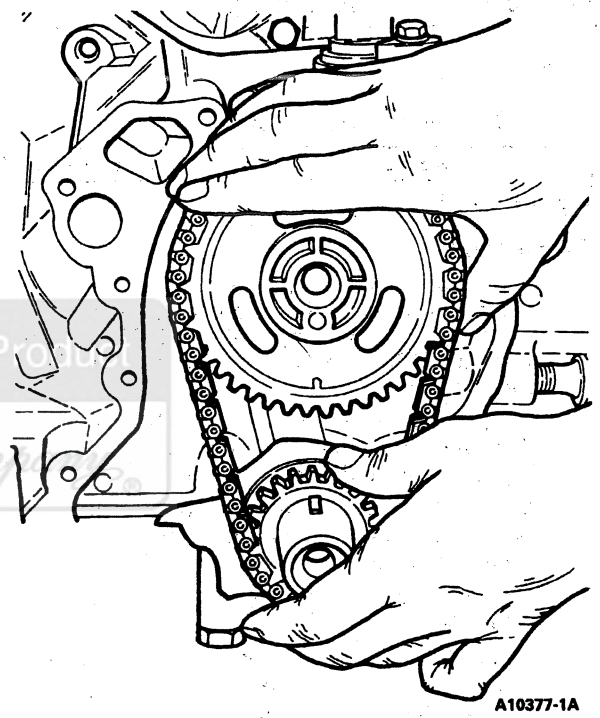

A10377-1A

13. **CAUTION: When removing the crankshaft (6303), take care not to damage any of the bearing surfaces on the crankshaft.**

    NOTE: The location of the main bearing caps and the main bearing inserts should be identified. When the engine is assembled, crankshaft main bearings (6333) which are to be reused should be installed in their original positions.

    Remove the crankshaft main bearing caps, crankshaft main bearings and crankshaft.
14. For cleaning purposes, the oil gallery and coolant drain plugs can be removed.

Ford Motor Company Licensed Product

DISASSEMBLY AND ASSEMBLY (Continued)

Crankshaft, Disassembled View

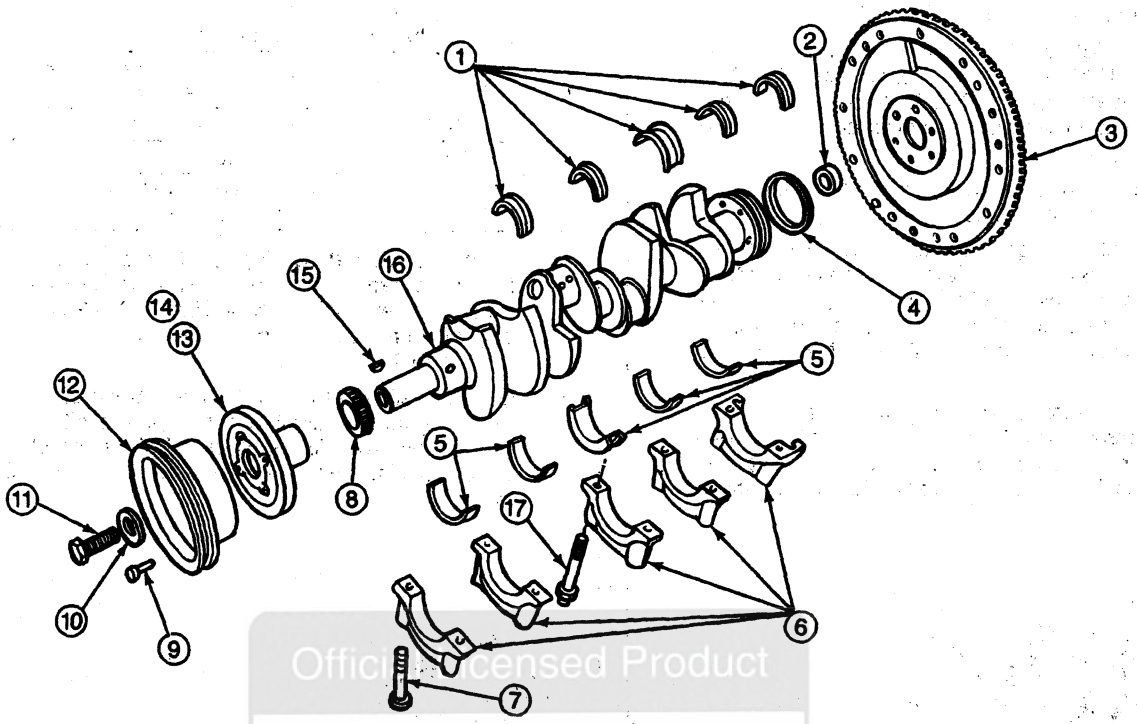

A10383-D

Official Licensed Product
Ford Motor Company

Item	Part Number	Description
1	6333	Crankshaft Main Bearing
2	7118	Transmission Input Shaft Pilot Bearing
3	6375	Flywheel
4	6701	Crankshaft Rear Oil Seal
5	6333	Crankshaft Main Bearing
6	6325	Main Bearing Caps
7	384664	Bolt
8	6306	Crankshaft Sprocket

(Continued)

Item	Part Number	Description
9	391264-S	Bolt
10	6378	Crankshaft Pulley Retaining Washer
11	388813	Bolt
12	6312	Crankshaft Pulley
13	1616	Damper
14	6A329	Damper
15	372890-S	Key
16	6303	Crankshaft
17	391546	Stud

Assembly

Before assembling cylinder blocks (6010), all sealing surfaces must be clean and free of chips, dirt, paint, and foreign material. Also make sure coolant and oil passages are clear.

If new piston rings are to be installed and no visible crosshatch marks remain on the cylinder wall, remove cylinder wall glaze using a spring-type tool. Follow instructions of tool manufacturer.

1. NOTE: Lightly oil all attaching bolt and stud threads with SAE 50 engine oil meeting Ford specification WSE-M2C908-A or equivalent before installation, except those specifying special sealant.

   Place crankshaft upper main bearings in position in the bores with the tang fitting in the slot provided. Lubricate bearings with Engine Assembly Lubricant D9AZ-19579-D meeting Ford specification ESR-M99C80-A.
2. Install the lower crankshaft main bearings in the bearing caps.
3. Carefully lower crankshaft into place. Use care to prevent damage to bearing surfaces.

DISASSEMBLY AND ASSEMBLY (Continued)

4. Check clearance of each crankshaft main bearing. Refer to Section 03-00.
5. Apply a light coat of Engine Assembly Lubricant D9AZ-19579-D or equivalent meeting Ford specification ESR-M99C80-A to the journals and crankshaft main bearings after crankshaft main bearings have been fitted.
6. NOTE: Make sure main bearing caps are installed in their original positions.

   Install all bearings and caps except thrust bearing cap (No. 3 bearing). Refer to Crankshaft Main Bearings in the In-Vehicle Service portion of this section for installation of thrust bearing cap. Tighten bearing caps to 129-142 N·m (95-105 lb-ft).
7. install crankshaft rear oil seal. Refer to Crankshaft Rear Oil Seal in the In-Vehicle Service portion of this section. Install engine rear plate and flywheel and tighten bolts to specification.

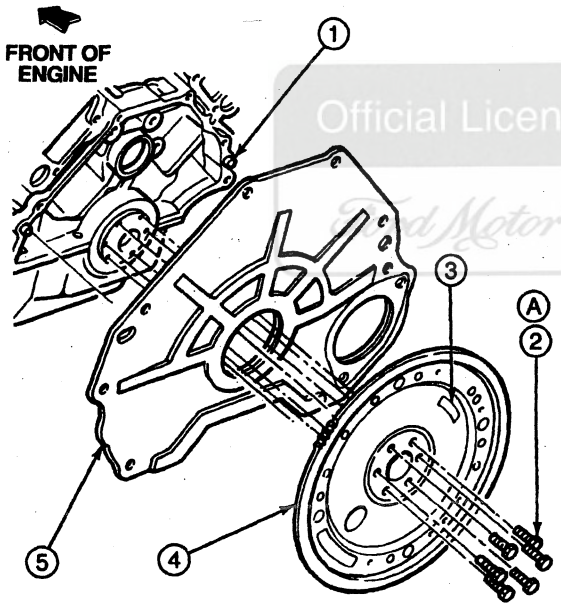

A13399-D

Item	Part Number	Description
1	—	Dowel (2 Places)
2	391275	Bolt, 7/16-20 x .72 (6 Places) (Apply Pipe Sealant with Teflon® D8AZ-19554-A or Equivalent Meeting Ford Specification WSK-M2G350-AZ or ESR-M18P7-A to Fasteners Prior to Assembly)
3	—	Automatic Transmission Usage Identification
4	6375	Flywheel
5	7007	Engine Rear Plate
A	—	Tighten to 102-115 N·m (75-85 Lb-Ft)

(Continued)

8. Coat all camshaft bearings (6261), camshaft lobes and camshaft sprocket spacer (6265) with Engine Assembly Lubricant D9AZ-19579-D or equivalent meeting Ford specification ESR-M99C80-A.
9. Carefully slide camshaft through camshaft bearings. Install camshaft thrust plates with groove toward cylinder blocks. Tighten thrust plate retaining bolts. Tighten to 12-18 N·m (9-13 lb-ft).

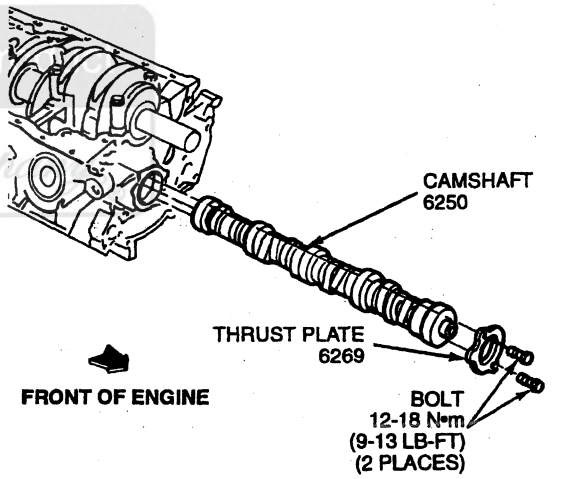

A13400-C

10. Check camshaft end play. Refer to Section 03-00. If not within specification, replace camshaft thrust plate.
11. Install camshaft sprocket (6256) and timing chain/belt. Position camshaft sprocket and timing chain/belt on camshaft and crankshaft sprockets simultaneously. Make sure timing marks on the sprockets are aligned.

DISASSEMBLY AND ASSEMBLY (Continued)

12. Install eccentric or timing flag, washers, and camshaft capscrew. Tighten camshaft capscrew to 54-61 N·m (40-45 lb-ft).

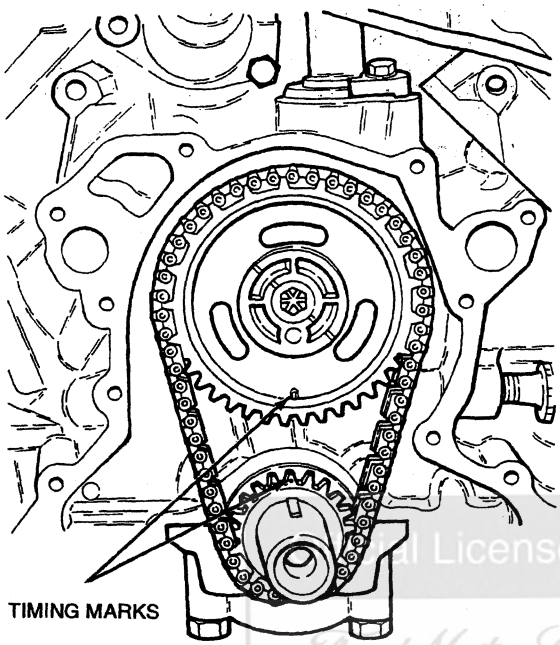

13. Oil the piston rings, pistons and cylinder walls. Make sure to install the pistons in the same cylinders from which they were removed.
14. Make sure the ring gaps are properly spaced around the circumference of the piston. (Refer to Pistons and Connecting Rods in the In-Vehicle Service portion of this section.)
15. NOTE: Install piston with indentation notch in the piston head toward front of engine.

    Install a piston ring compressor on the piston and push piston in with a hammer handle or an appropriate piston hammer until it is slightly below top of cylinder. Make sure to guide connecting rods to avoid damaging crankshaft journals (cover studs).
16. Check clearance of each connecting rod bearing (6211). Refer to procedure in Section 03-00.
17. After connecting rod bearings have been fitted, apply a light coat of engine oil to the crankshaft connecting rod journals and connecting rod bearings.
18. Turn the crankshaft throw to the bottom of its stroke. Push piston all the way down until connecting rod bearing seats on the crankshaft journal.
19. Install connecting rod cap. Install nuts and tighten to 54-61 N·m (40-45 lb-ft).
20. Check side clearance between connecting rods on each crankshaft journal after piston and connecting rod assemblies have been installed.

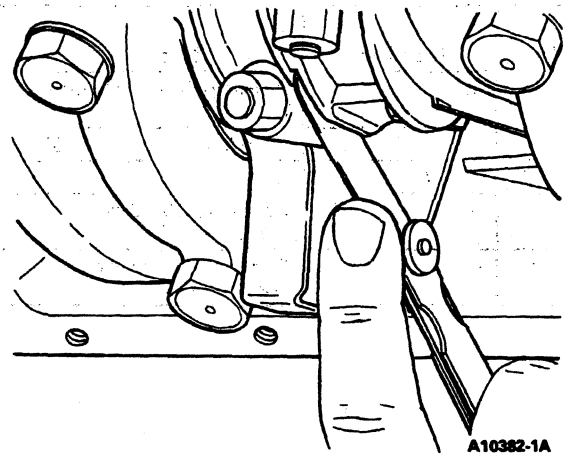

21. Prime the oil pump and install oil pump, oil pump intermediate shaft, and oil pump screen cover and tube assembly. Tighten oil pump bolts to 30-43 N·m (22-32 lb-ft).

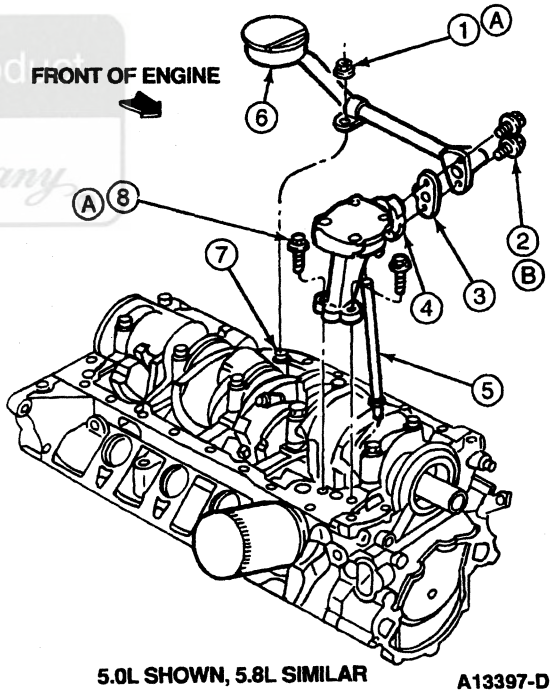

5.0L SHOWN, 5.8L SIMILAR A13397-D

Item	Part Number	Description
1	33771	Nut, 3/8-16
2	391378	Screw and Washer, 5/16-18 x 1.13
3	6626	Oil Pump Inlet Tube Gasket
4	6600	Oil Pump
5	6A618	Oil Pump Intermediate Shaft

(Continued)

Ford Motor Company

DISASSEMBLY AND ASSEMBLY (Continued)

Item	Part Number	Description
6	6622	Oil Pump Screen Cover and Tube
7	—	Third Main (Part of 6010)
8	57647	Bolt
A	—	Tighten to 30-43 N·m (22-32 Lb-Ft)
B	—	Tighten to 16-24 N·m (12-18 Lb-Ft)

22. Install crankshaft front seal (6700) in engine front cover.
23. Install crankshaft front seal, gasket, timing pointer / misfire sensor assembly and engine front cover. Tighten cover bolts to specification. Refer to Engine Front Cover in the In-Vehicle Service portion of this section. Also, install crankshaft vibration damper / pulse ring and crankshaft pulley and tighten bolt to 95-122 N·m (70-90 lb-ft).
24. Install new oil filter.

Official Licensed Product
Ford Motor Company

DISASSEMBLY AND ASSEMBLY (Continued)

25. Install oil pan gasket and seal assembly. Install oil pan. Tighten oil pan bolts to specification. Tighten the four 5/16-18 x 1.12 oil pan bolts to 12-16 N·m (9-12 lb-ft) and the remaining 1/4-20 x .94 oil pan bolts to 10-14 N·m (7-10 lb-ft).

5.8L OIL PAN SEALANT LOCATIONS

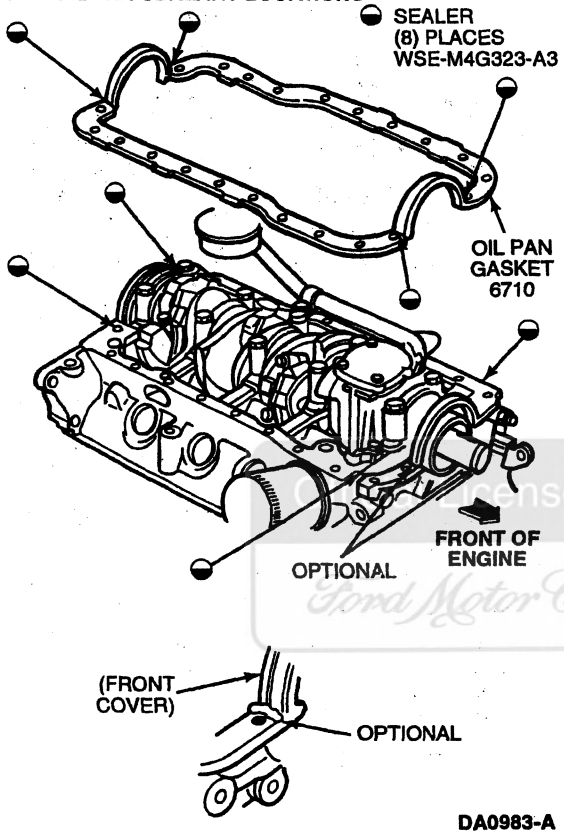

DA0983-A

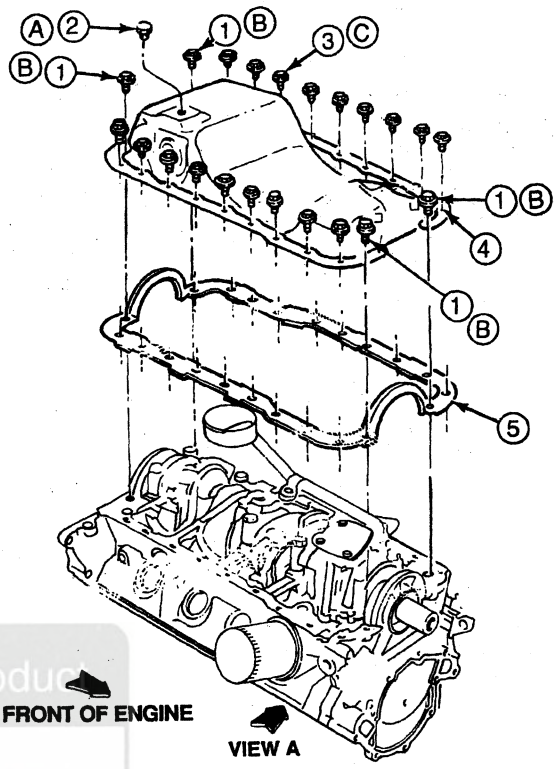

A13396-G

Item	Part Number	Description
1	390657	Bolt, 5/16-18 x 1.12
2	6730	Oil Pan Drain Plug
3	390658	Bolt, 1/4-20 x .94
4	6675	Oil Pan Assembly
5	6710	Gasket, Oil Pan
A	—	Tighten to 12-16 N·m (9-12 Lb-Ft)
B	—	Tighten to 12-16 N·m (9-12 Lb-Ft)
C	—	Tighten to 10-14 N·m (7-10 Lb-Ft)

26. Install valve tappets in their original bores.
27. Install tappet guide plate (roller tappet engines only) and tighten screws and washers to specification.
28. NOTE: If cylinder heads were completely disassembled, refer to Cylinder Head in the Disassembly and Assembly portion of this section.

    Position head gaskets (6051) on cylinder blocks. Install cylinder head locating dowels. Install cylinder heads.

Ford Motor Company

DISASSEMBLY AND ASSEMBLY (Continued)

29. Tighten cylinder head bolts to specification, in the sequence shown.

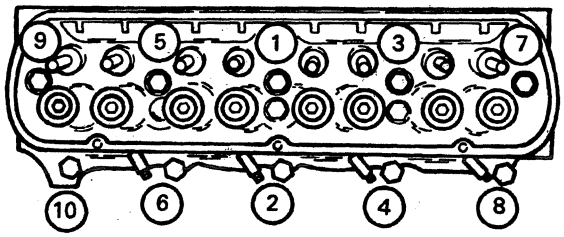

A10374-1A

30. Install push rods, rocker arms, rocker arm seats, rocker arm fulcrum guides, and tighten fulcrum bolts to 24-34 N·m (18-25 lb-ft).
31. NOTE: This sealer sets up within 15 minutes after application. To assure effective sealing, assembly should proceed promptly.

    Apply 1.6-mm (1/16-inch) bead of Silicone Rubber D6AZ-19562-BA or equivalent meeting Ford specifications ESB-M4G92-A and ESR-M4G195-A or equivalent sealer to the end seals (junction).

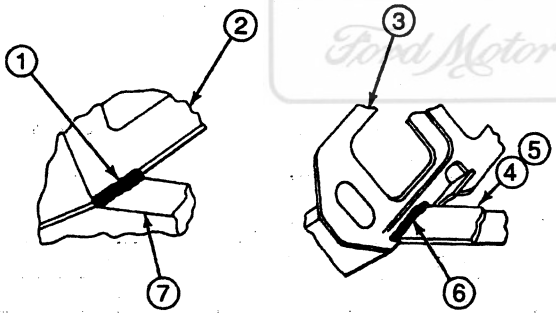

A3715-P

Item	Part Number	Description
1	F4AZ-19562-B	Sealer (4 Joints)
2	6049	Cylinder Head
3	9439	Intake Manifold Gasket
4	9A424	Intake Manifold Seal (LH)
5	9A425	Intake Manifold Seal (RH)
6	F4AZ-19562-B	Sealer (4 Seal Ends)
7	—	Seal Mounting Surface of Cylinder Block (Part of 6010)

32. Install lower and upper intake manifolds (9424). Use guide pins to ease installation of intake manifolds onto cylinder heads.
33. Tighten intake manifold bolts in two steps using the sequence shown.

    Step 1 — 16 N·m (12 lb-ft)

    Step 2 — 31-34 N·m (23-25 lb-ft)

Tightening Sequence

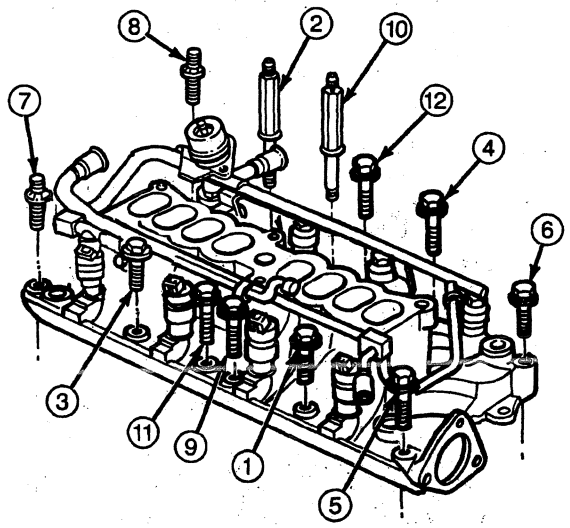

A10698-C

34. Install oil level indicator tube (6754) and oil level dipstick (6750) assembly.
35. Position valve cover gasket (6584) in each valve cover and install valve covers.

    Refer to Valve Cover and Gasket in the In-Vehicle Service portion of this section.
36. Install wiring harnesses, emission control system, fuel system, ignition system and front end accessory drive components, by referring to procedure in appropriate section.

Official Licensed Product
Ford Motor Company

Subassemblies

Cylinder Head

Disassembly

1. Remove the exhaust manifolds and the spark plugs (12405).
2. Clean the carbon out of the cylinder head combustion chambers before removing the valves.
3. Carefully compress the valve spring (6513) using a suitable valve spring compressor. Remove the valve spring retainer key (6518) and release the valve spring.
4. Remove the sleeve, spring retainer or retainer/rotator, valve spring, guide mounted stem seal and valve. Discard the valve stem seal (6571). Identify all valve parts.

DISASSEMBLY AND ASSEMBLY (Continued)

5. Clean, inspect and service the cylinder head (6049) as required, or transfer all usable parts to a new cylinder head.

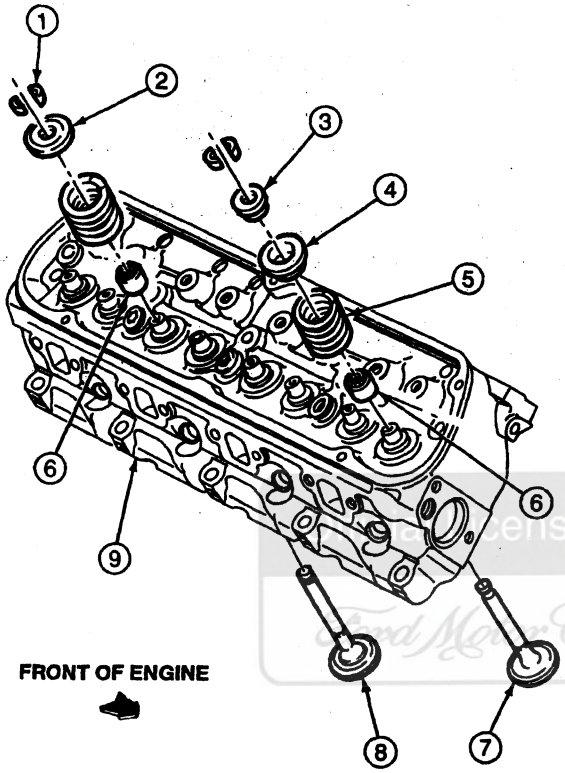

A17841-B

Item	Part Number	Description
1	6518	Valve Spring Retainer Key
2	6514	Valve Spring Retainer (Exhaust Only)
3	6517	Valve Spring Retainer Sleeve (Intake Only)
4	6514	Valve Spring Retainer (Intake Only)
5	6513	Valve Spring
6	6571	Valve Stem Seal (White, Intake Only)
7	6507	Intake Valve
8	6505	Exhaust Valve
9	6049	Cylinder Head

Assembly

1. Install each valve in the port from which it was removed or to which it was fitted. Install a new valve stem seal on the intake valve guide and exhaust valve guide.
2. Install the valve spring over the valve, and then install the spring retainer and sleeve. Compress the valve spring, using a suitable valve spring compressor, and install the valve spring retainer keys.
3. **CAUTION: Do not install the spacers unless necessary. Use of spacers in excess of recommendations will result in overstressing the valve springs and overloading the camshaft lobes, which could lead to valve spring breakage and worn camshaft lobes.**

   Measure the assembled height of the valve spring from the surface of the cylinder head spring pad to the underside of the spring retainer with dividers. Check the dividers against a scale. The spring assembled heights should measure 1.78 inch for intake and 1.60 inch for exhaust. If the assembled height is greater than specifications, install the necessary 0.762-mm (0.030-inch) thick spacer(s) between the cylinder head spring pad and the appropriate valve spring to bring the assembled height to the recommended height.

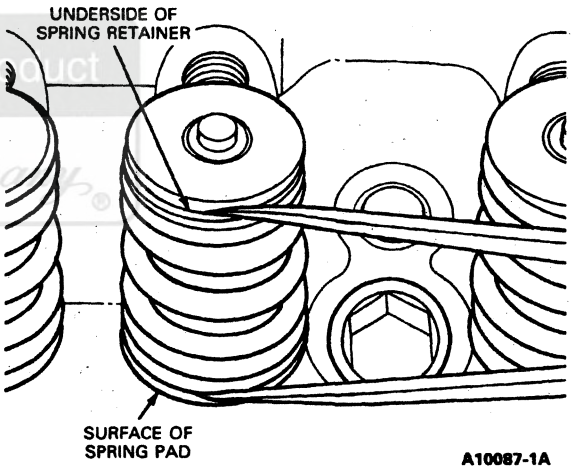

A10087-1A

4. Install the exhaust manifolds and the spark plug.

Pistons, Piston Pins and Rings

SPECIAL SERVICE TOOL(S) REQUIRED

Description	Tool Number
Piston Pin Remover/Replacer	T68P-6135-A

Disassembly

1. Remove the bearing inserts from the connecting rod and cap.
2. Mark the pistons (6108) to make sure they are assembled with the same rod and installed in the same cylinders from which they were removed.
3. Using an arbor press and the Piston Pin Remover/Replacer T68P-6135-A, press the piston pin from the piston and connecting rod. Remove the piston rings if they are to be replaced.

Unlicensed Product Ford Motor Company

DISASSEMBLY AND ASSEMBLY (Continued)

Piston Pin, Removal and Installation

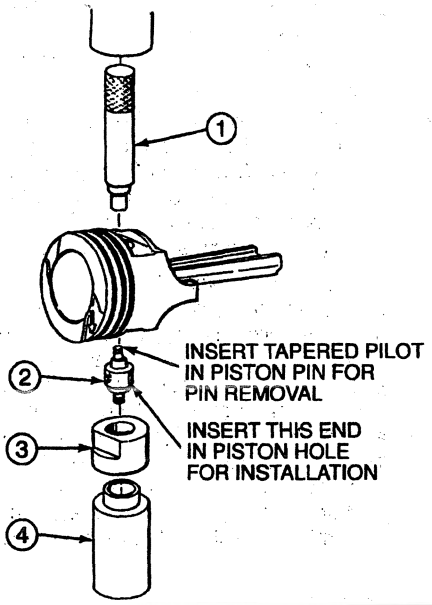

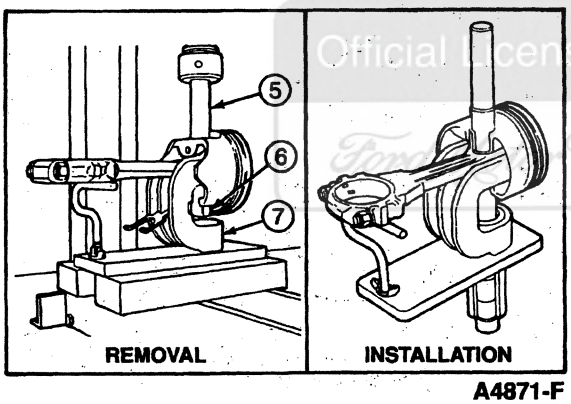

A4871-F

Item	Part Number	Description
1	—	Driver (Part of T68P-6135-A)
2	—	Locator (Part of T68P-6135-A)

(Continued)

Item	Part Number	Description
3	—	Adapter (Part of T68P-6135-A)
4	—	Cup (Part of T68P-6135-A)
5	—	Pin Pusher (Part of T68P-6135-A)
6	6135	Piston Pin
7	—	Receiving Tube (Part of T68P-6135-A)

Assembly

The piston, connecting rod and related parts are shown. Check the fit of a new piston in the cylinder bore before assembling the piston and piston pin to the connecting rod.

The piston pin bore of a connecting rod and the diameter of the piston pin must be within specifications. Refer to Specifications in this section.

Official Licensed Product
Ford Motor Company

DISASSEMBLY AND ASSEMBLY (Continued)

NOTE: Replacement pistons are slightly lighter in weight. Pistons must be replaced as a complete set to avoid the introduction of torsional vibration to the engine.

1. NOTE: Assemble the piston to the connecting rod with the indentation in the piston positioned as shown.

   Apply a light coat of recommended quality engine oil to all parts.

   On replacement connecting rods, install the large-chamfered side of the connecting rod bearing bore toward the crankshaft cheek, facing toward front of engine (6007) on the right bank rods and facing toward rear of engine on left bank rods.

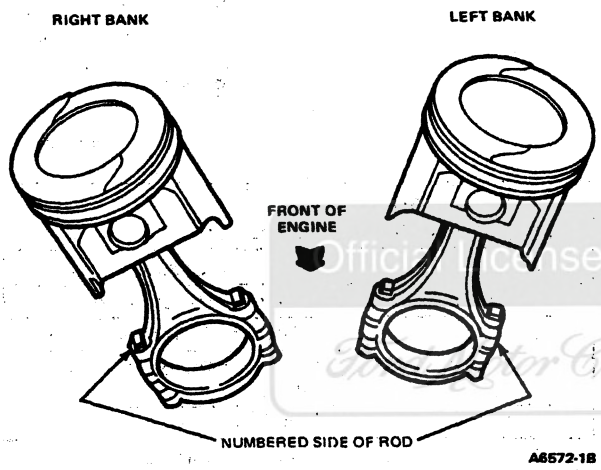

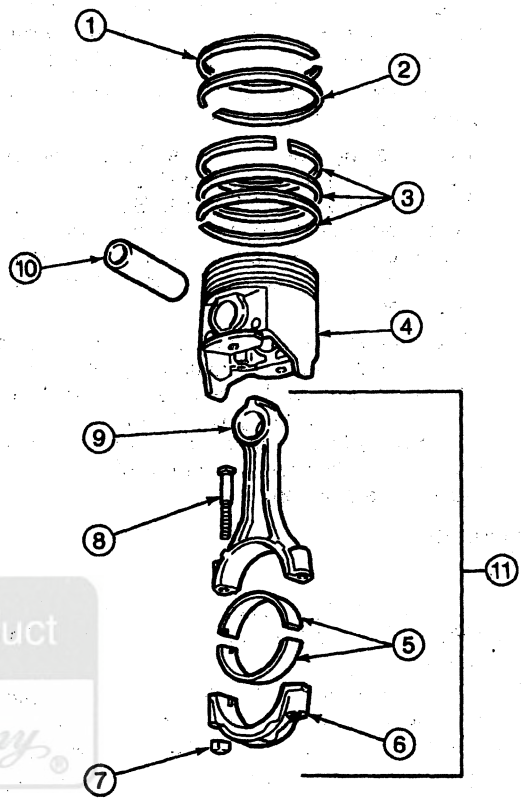

Item	Part Number	Description
1	6148	Partial Piston Ring Set (Upper)
2	6148	Partial Piston Ring Set (Lower)
3	—	Oil Ring (Part of 6148)
4	6102	Piston, Pin and Ring
5	6211	Connecting Rod Bearing
6	6210	Cap — Connecting Rod
7	6212	Connecting Rod Nut
8	6214	Connecting Rod Bolt
9	6200	Connecting Rod
10	6135/6108	Piston Pin/Piston and Pin Assembly
11	—	Connecting Rod and Rod Bearings (Part of 6200)

2. Start the piston pin in the piston and connecting rod (this may require a very light tap with a mallet). Using an arbor press and Piston Pin Remover/Replacer T68P-6135-A, press the piston pin through the piston and connecting rod until the pin is centered in the piston.

Official Licensed Product Ford Motor Company

DISASSEMBLY AND ASSEMBLY (Continued)

3. Check the end gap of all piston rings. Refer to Section 03-00. It must be within specifications. Follow the instructions contained on the piston ring package and install the piston rings using a piston ring installation tool of the proper size.
4. NOTE: If the lower lands have high steps, the piston should be replaced.

   Check the ring side clearance of the compression rings with a feeler gauge inserted between the ring and its lower land. Refer to Section 03-00. The gauge should slide freely around the entire ring circumference without binding. Any wear that occurs will form a step at the inner portion of the lower land.
5. Make sure the bearing inserts and the bearing bore in the connecting rod and cap are clean. Foreign material under the inserts will distort the connecting rod bearing (6211) and cause a failure. Install the connecting rod bearing inserts in the connecting rod and cap with the tangs fitting in the slots provided.

Oil Pump

Disassembly

1. Remove the oil pump screen cover and tube (6622) from the oil pump (6600) and remove the gaskets.
2. Remove the cover attaching bolts, then remove the cover. Remove the inner rotor and shaft assembly. Then remove the outer race.
3. Drill a small hole and insert a self-threading sheet metal screw of the proper diameter into the oil pressure relief valve chamber cap and pull the cap out of the chamber. Remove the spring and plunger.

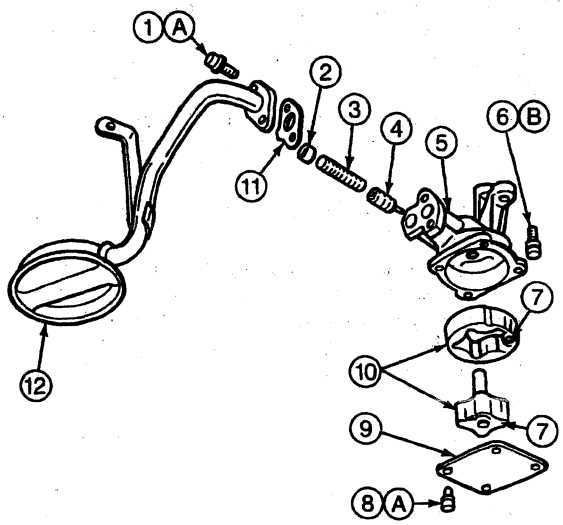

A2535-F

Item	Part Number	Description
1	—	Bolt (Part of 6600)
2	6666	Oil Pump Relief Valve Plug
3	6670	Oil Pump Relief Valve Spring
4	6614	Oil Pump Relief Valve Repair Kit
5	6600	Oil Pump
6	—	Bolt (Part of 6600)
7	—	Identification Mark
8	—	Bolt (Part of 6600)
9	6616	Oil Pump Body Plate
10	6608	Oil Pump Drive Rotor and Shaft
11	6626	Oil Pump Inlet Tube Gasket
12	6622	Oil Pump Screen Cover and Tube
A	—	Tighten to 14-20 N·m (10-15 Lb-Ft)
B	—	Tighten to 30-43 N·m (22-32 Lb-Ft)

Assembly

1. Clean, inspect and oil all parts thoroughly.
2. Install the oil pressure relief valve plunger, spring and a new cap.
3. NOTE: Be sure the dimple (identification mark) on the outer race is facing the same side as the identification mark on the rotor.

   Install the outer race and the inner rotor and shaft assembly.
4. Replace gasket and install the cover and tighten the cover attaching bolts to 30-43 N·m (22-32 lb-ft).

DISASSEMBLY AND ASSEMBLY (Continued)

Valve Tappet, Hydraulic

CAUTION: The internal parts of each hydraulic tappet assembly are matched sets. Do not mix the parts. Keep the assemblies intact until they are to be cleaned.

Valve tappets (6500) should always be tested after assembly. Refer to Section 03-00.

Disassembly

Disassemble and assemble each valve tappet separately. Keep the valve tappets in proper sequence so that they can be installed in their original bores.

1. Grasp the plunger retainer with needlenose pliers to release it from the groove. It may be necessary to depress the leakdown plunger to fully release the plunger retainer.
2. Remove the push rod socket, metering valve (disc), plunger and spring.
3. Carefully remove the plunger spring, the check valve retainer socket, the check valve spring and valve from the plunger.

Roller Tappet

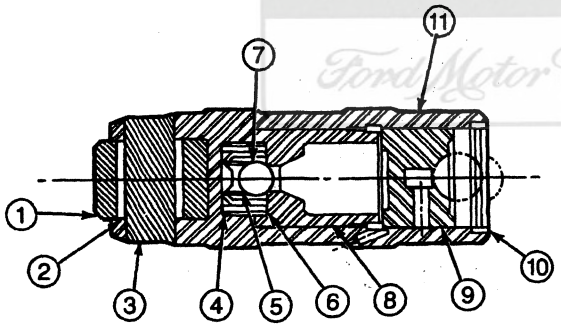

A16238-A

Item	Part Number	Description
1	—	Cam Roller (Part of 6500)
2	—	Needles (Part of 6500)
3	—	Axle (Part of 6500)
4	—	Plunger Spring (Part of 6500)
5	—	Check Ball Spring (Part of 6500)
6	—	Ball Retainer (Part of 6500)
7	—	Check Ball (Part of 6500)
8	—	Leak-Down Plunger (Part of 6500)
9	—	Plunger Retainer (Part of 6500)
10	—	Plunger Retainer (Part of 6500)
11	—	Body (Part of 6500)

Assembly

1. Place the plunger upside down on a clean workbench.
2. Place the check valve (disc or check ball) in position over the oil hole on the bottom of the plunger. Set the check valve spring on top of the check valve (disc or check ball).
3. Position the check valve retainer over the check valve and spring and push the retainer down into place on the plunger.
4. Place the plunger spring, and then the plunger (open end up) into the valve tappet body.
5. Position the metering valve (disc) in the plunger and then place the push rod socket in the plunger.
6. Depress the plunger, and position the closed end of the plunger retainer in the groove of the valve tappet body. With the plunger still depressed, position the open ends of the plunger retainer in the groove. Release the plunger, and then depress it again to fully seat the plunger retainer.
7. Use the Tappet Leakdown Tester TOOL-6500-E to fill the valve tappets with test fluid. Refer to Section 03-00.

Cylinder Block Assembly

Disassembly

1. Mount the engine in a workstand and remove all parts not furnished with the new cylinder blocks (6010) assembly following engine components removal and installation procedures in this section.
2. Remove the cylinder blocks assembly from the workstand.

Assembly

1. **CAUTION: Do not use solutions such as brake cleaner, carburetor cleaner, etc., as these solutions can leave a residue on the machined surfaces. Use only a cleaner which meets or exceeds Ford specification WSE-M5B392-A, such as Metal Surface Cleaner F4AZ-19A536-RA or equivalent.**

   Clean the gasket and seal surfaces of all serviceable parts and assemblies.
2. Position the new cylinder block assembly in a workstand.
3. Transfer all serviceable parts removed from the old cylinder blocks assembly, following removal and installation procedures in this section.
4. Check all assembly clearances. Refer to Specifications listed at the end of this section, and correct as necessary.

Cylinder Block, Bare

Before replacing a cylinder blocks, determine if it is serviceable. If so, perform the necessary service. Refer to Section 03-00.

Official Licensed Product Ford Motor Company

DISASSEMBLY AND ASSEMBLY (Continued)

Disassembly

1. Completely disassemble the engine. Refer to Engine in the Disassembly and Assembly portion of this section.
2. Ridge-ream the cylinder bores before removing piston assemblies.

Assembly

1. Clean the gasket and seal surfaces of all serviceable parts and assemblies.
2. Position the new cylinder blocks in a workstand.
3. Transfer all serviceable parts removed from the old cylinder blocks, following appropriate removal and installation procedures in this section.
4. Check all assembly clearances. Refer to Specifications and correct as necessary.

ADJUSTMENTS

Valve Clearance

SPECIAL SERVICE TOOL(S) REQUIRED

Description	Tool Number
Tappet Bleed Down Wrench	T71P-6513-B

1. Disconnect the red and blue leads (S-terminal) at the starter relay.
2. Install an auxiliary starter switch between the battery and S-terminals of the starter relay. Crank the engine (6007) with the ignition switch in OFF position until the No. 1 piston (6108) is on TDC on the compression stroke.
3. With the crankshaft (6303) in the positions designated in steps 4, 5 and 6, position the tappet compressor tool on the rocker arm (6564).

   Slowly apply pressure to bleed down the valve tappet (6500) until the plunger is completely bottomed. Hold the valve tappet in this position and check the available clearance between the rocker arm and the valve stem tip with a feeler gauge.

   If the clearance is less than specifications, install a shorter push rod (6565). If the clearance is greater than specifications, install a longer push rod.

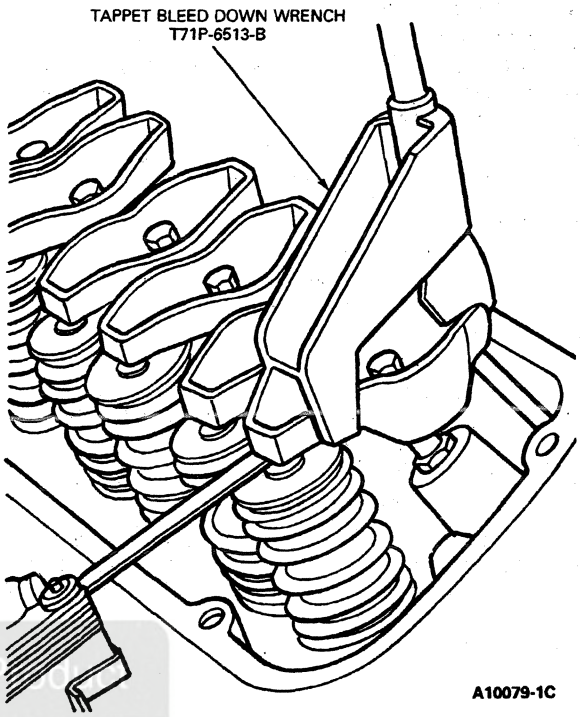

A10079-1C

4. With the No. 1 piston on TDC at the end of the compression stroke, POSITION 1, check the following valves:

   No. 1 Intake No. 1 Exhaust

   No. 4 Intake No. 3 Exhaust

   No. 8 Intake No. 7 Exhaust

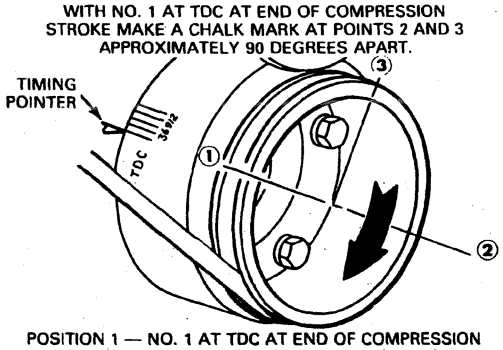

POSITION 1 — NO. 1 AT TDC AT END OF COMPRESSION STROKE.
POSITION 2 — ROTATE THE CRANKSHAFT 180 DEGREES (1/2 REVOLUTION) CLOCKWISE FROM POSITION 1.
POSITION 3 — ROTATE THE CRANKSHAFT 270 DEGREES (3/4 REVOLUTION) CLOCKWISE FROM POSITION 2.

A3234-H

5. Rotate the crankshaft to POSITION 2 and check the following valves:

   No. 3 Intake No. 2 Exhaust

   No. 7 Intake No. 6 Exhaust

ADJUSTMENTS (Continued)

6. Rotate the crankshaft to POSITION 3 and check the following valves:
   No. 2 Intake No. 4 Exhaust
   No. 5 Intake No. 5 Exhaust
   No. 6 Intake No. 8 Exhaust

SPECIFICATIONS

ENGINE SPECIFICATIONS

Engine	Bore and Stroke	Firing Order	Oil Pressure Hot @ 2000 rpm		Engine Type and Number of Cylinders
			kPa	(psi)	
5.8L (351 CID) MFI W-V-8	4.00 x 3.50	13726548	275-448	(40-65)	O.H.V. V-8

General Specifications

CYLINDER HEAD AND VALVE TRAIN

Engine	Combustion Chamber Volume C.C.[b]	Valve Guide Bore Diameter		Valve Seat Width[a]		Valve Seat Runout TIR Maximum	Valve Arrangement Front to Rear	Gasket Surface Flatness[c]
		Intake	Exhaust	Intake	Exhaust			
5.8L (351 CID) MFI W-V-8	60.6-63.6	0.3433-0.3443	0.3433-0.3443	0.060-0.080	0.060-0.080	0.002	RT I-E-I-E-I-E-I-E LT E-I-E-I-E-I-E-I	0.003 in Any 6 Inches 0.006 Overall

a Valve seat angle — 45°.
b Compression pressure (psi) of the lowest cylinder must be at least 75% of the highest to be within specification.
c Gasket surface finish — rms 60-150.

VALVE ROCKER ARM SHAFT, PUSH RODS AND TAPPETS

Engine	Rocker Arm Lift Ratio to 1	Push Rod Runout TIR Maximum	Valve Tappet or Lifter			Collapsed Tapped Gap (Clearance)	
			Standard Diameter	Clearance to Bore[a]	Hydraulic Lifter Leakdown Rate[b]	Allowable	Desired
5.8L (351 CID) MFI W-V-8	1.59	0.015	0.8740-0.8745	0.0007-0.0027	10 to 50 Seconds for 1/16 Travel	0.071-0.171	0.091-0.151

a Service limit — 0.005.
b Time required for plunger to leak down 0.0625 inch under load of 50 lb using leakdown fluid in tappet.

Official Licensed Product Ford Motor Company

SPECIFICATIONS (Continued)

VALVE SPRINGS

Engine	Valve Spring Compression Pressure (Lb) @ Specified Height		Valve Spring Free Length (Approximate)		Valve Spring Assembled Height		Valve Spring Out of Square
	Intake[a]	Exhaust	Intake	Exhaust	Intake	Exhaust	
5.8L (351 CID) MFI W-V-8	74-82@ 1.78 190-210@ 1.20	76-84 @ 1.60 190-210 @ 1.20	2.06	1.88	1.75-1.81	1.58-1.64	5/64 (0.078)

a Service limit — 10% loss pressure.

VALVES

Engine	Valve Stem to Guide Clearance[a]		Valve Head Diameter[b]		Valve Face Runout Maximum
	Intake	Exhaust	Intake	Exhaust	
5.8L (351 CID) MFI W-V-8	0.0010-0.0027	0.0015-0.0032	1.770-1.794	1.453-1.468	0.002

a Service clearance — 0.0055.
b Valve face angle — 44°.

VALVE STEM DIAMETER

Engine	Standard		0.015 Oversize		0.030 Oversize	
	Intake	Exhaust	Intake	Exhaust	Intake	Exhaust
5.8L (351 CID) MFI W-V-8	0.3415-0.3423	0.3410-0.3418	0.3565-0.3573	0.3561-0.3568	0.3715-0.3723	0.3711-0.3718

Official Licensed Product
Ford Motor Company

CAMSHAFT

Engine	Lobe Lift[a]		Camshaft End Play		Camshaft Journal to Bearing Clearance[b]
	Intake	Exhaust	End Play	Wear Limit	
5.8L (351 CID) MFI W-V-8	0.2637	0.2801	0.001-0.007	0.009	0.001-0.003

a Maximum allowable lift loss — 0.005.
b Service limit — 0.006 maximum.

CAMSHAFT DRIVE

Engine	Camshaft Journal Diameter — Standard[a]					Camshaft Bearing Inside Diameter					Camshaft Front Bearing Location[b]
	No. 1	No. 2	No. 3	No. 4	No. 5	No. 1	No. 2	No. 3	No. 4	No. 5	
5.8L (351 CID) MFI W-V-8	2.0815	2.0665	2.0515	2.0365	2.0215	2.0835	2.0685	2.0535	2.0385	2.0235	0.005-0.020

a Camshaft journal runout — 0.005 TIR maximum.
b Distance in inches that front edge of bearing is installed below the front face of the cylinder block.

NOTE: Timing chain deflection — 12.70 mm (0.50 inch) maximum.

CYLINDER BLOCK

Engine	Cylinder Bore Diameter[a]	Main Bearing Bore Diameter[b]	Distributor Shaft Bearing Bore Diameter	Head Gasket Surface Flatness	Head Gasket Surface Finish	Tappet Bore Diameter
5.8L (351 CID) MFI W-V-8	4.0000-4.0048	3.1922-3.1930	0.5155-0.5170	0.003 in any 6 in. 0.006 overall	RMS 60-150	0.8752-0.8767

a Maximum out-of-round — 0.0015, service limit — 0.005, maximum taper service limit — 0.010, cylinder bore surface finish — rms 18-38, bore tapes service limit — 0.010.
b Crankshaft to rear face of block runout. TIR maximum 0.005.

SPECIFICATIONS (Continued)

BEARING JOURNALS

Engine	Main Bearing Journal Diameter[a]	Main Bearing Journal Runout TIR Maximum[b]	Main Bearing Thrust Face Runout TIR Maximum	Main Bearing Journal Taper Maximum Per Inch	Thrust Bearing Journal Length	Main and Rod Bearing Journal Finish rms Maximum	Main Bearing Thrust Face Finish rms Maximum
5.0L (351 CID) MFI W-V-8	2.9994-3.0002	0.002	0.001	0.0005	1.137-1.139	12	25 Front — 20 Rear

a Maximum out-of-round — 0.0006.
b Service limit — 0.005.

CRANKSHAFT AND FLYWHEEL

Engine Assembled	Connecting Rod Journal Diameter[a]	Connecting Rod Journal Taper Per Inch Maximum	Crankshaft Free End Play[b]	Flywheel Clutch Face Runout
5.8L (351 CID) MFI W-V-8	2.3103-2.3111	0.0006	0.004-0.008	0.010

a Maximum out-of-round — 0.0006.
b Service limit — 0.012.

CRANKSHAFT BEARINGS

Engine	Connecting Rod Bearing To Crankshaft Clearance Selective Fit			Main Bearing to Crankshaft Clearance Selective Fit[a]		
	Desired	Allowable	Bearing Wall Thickness Std.[a]	Desired	Allowable	Bearing Wall Thickness Std.[a]
5.8L (351 CID) MFI W-V-8	0.0008-0.0015	0.0008-0.0025	0.0572-0.0577	0.0008-0.0015	0.0008-0.0026	0.0957-0.0960

a For 0.002 undersize add 0.001 to standard wall thickness.

Official Licensed Product Ford Motor Company

CONNECTING ROD, PISTON AND RINGS

Engine	Piston Pin Bore or Bushing I.D.	Rod Bearing Bore I.D.[a]	Rod Length Center to Center	Connecting Rod Alignment Maximum Total Difference		Rod to Crankshaft Assembled Side Clearance[b]
				Twist[b]	Bend[c]	
5.8L (351 CID) MFI W-V-8	0.9097-0.9112	2.4265-2.4273	5.9545-5.9575	0.024	0.012	0.010-0.020

a Connecting rod bearing bore maximum out-of-round — 0.0004.
b Service limit — 0.023.
c Pin bushing and crankshaft bore must be parallel and in same vertical plane with specified total difference when measured at the ends of an 8-inch long bar, 4 inches on each side of rod centerline.

PISTON

	Diameter[a]			Piston to Bore Clearance Selective Fit	Piston Pin Bore Diameter	Ring Groove Width Compression		
	Coded Red	Coded Blue	.003 Oversize Coded Yellow			Top	Bottom	Oil
5.8L (351 CID) MFI W-V-8	3.9978-3.9984	—	—	0.0015-0.0023	0.9123-0.9126	0.060-0.061	0.060-0.061	0.1587-0.1597

a Measured at the piston pin bore centerline at 90° to the pin.

SPECIFICATIONS (Continued)

PISTON PIN

Engine	Length	Diameter — Standard	To Piston Pin Bore Clearance[a]	To Connecting Rod Bushing Clearance
5.8L (351 CID) MFI W-V-8	3.010-3.040	0.9121-0.9122	0.0003-0.0005	Interference Fit

a Selective fit.

PISTON RINGS

Engine	Ring Width		Side Clearance[a]			Ring Gap		
	Top Compression	Bottom Compression	Top Compression	Bottom Compression	Oil	Top Compression	Bottom Compression	Oil[b]
5.8L (351 CID) MFI W-V-8	0.0577-0.0587	0.0577-0.0587	0.0013-0.0033	0.0013-0.0033	Snug	0.010-0.020	0.018-0.028	0.010-0.040

a Service limit — 0.002 maximum increase in clearance.
b Steel rail.

OIL PUMP AND OIL CAPACITY

Engine	Relief Valve Spring Pressure Lb @ Specified Length	Driveshaft to Housing Clearance	Relief Valve to Housing Clearance	Rotor Assembly End Clearance	Outer Race to Housing Clearance	Engine Oil Capacity[a]		
						U.S. Quarts	Imperial Quarts	Liters
5.8L (351 CID) MFI W-V-8	18.2-20.2 @ 2.49	0.0015-0.0030	0.0015-0.0030	0.004 Maximum	0.001-0.003	5	4.2	4.7

a Add 1 U.S. quart (or equivalent in imperial quarts or liters) when replacing filter.

Ford Motor Company Licensed Product

PIPE THREADS

1/8-27	1/4-18	3/8-18	1/2-14
7-11 (5-8)	11-16 (8-12)	16-24 (12-18)	16-24 (12-18)

TORQUE SPECIFICATIONS

Description	N·m	Lb-Ft	Lb-In
Camshaft Sprocket — Gear to Camshaft	54-61	40-45	—
Camshaft Thrust Plate to Cylinder Block	12-16	9-12	—
Connecting Rod Nut	54-61	40-45	—
Engine Front Cover	20-28	15-21	—
Cylinder Head Bolts	SEE NOTE		
Damper to Crankshaft	95-122	70-90	—
EGR Valve to Throttle Body	18-26	13-19	—
Flywheel to Crankshaft	102-115	75-85	—
Main Bearing Cap Bolts	129-142	95-105	—
Manifold to Cylinder Head — Intake	SEE NOTE		
Upper to Lower Intake Manifold	17-24	13-18	—
Manifold to Cylinder Head — Exhaust	35-43	26-32	—

(Continued)

TORQUE SPECIFICATIONS (Cont'd)

Description	N·m	Lb-Ft	Lb-In
Intake Manifold Vacuum Fittings — Aluminum	8-13	—	71-115
Intake Manifold Pipe Fittings — Aluminum	17-24	12-18	—
Oil Pump Screen Cover and Tube to Main Bearing Cap	30-43	22-32	—
Thermactor Pump Bracket to Cylinder Block	44-67	30-45	—
Distributor Clamp-Down	24-32	18-24	—
Oil Filter Insert to Cylinder Block/Adaptor	28-40	20-30	—
Oil Filter to Adapter or Cylinder Block	1/2 Turn After Gasket Contacts Sealing Surface — Oiled Gasket		
Oil Inlet Tube to Pump	14-20	10-15	—
Oil Pan Drain Plug	20-34	15-25	—
Oil Pan to Cylinder Block (18 Places)	10-14	7-10	—
Oil Pan to Cylinder Block (4 Places)	12-16	9-12	—
Oil Pump to Cylinder Block	30-43	22-32	—
Oil Filter	11-14	8-10	—
Damper Bolt	54-71	40-52	—

(Continued)

SPECIFICATIONS (Continued)

TORQUE SPECIFICATIONS (Cont'd)

Description	N·m	Lb-Ft	Lb-In
Rocker Arm Stud / Bolt to Cylinder Head	24-34	18-25	—
Spark Plug to Cylinder Head	14-20	10-15	—
Valve Cover	16-20	12-15	—
Water Outlet Housing	13-16	9-12	—
Water Pump to Block / Front Cover	20-28	15-21	—
Thermactor Pump and Alternator Bracket to Cylinder Head — Bolt 3/8-16	41-54	30-40	—
EGR Transducer Nut	17-24	13-18	—
Accelerator Cable Bracket-to-Upper Intake Manifold	11-13	8-10	—
Intake Manifold Vacuum Outlet Fitting and Cap	8-13	—	71-115
Coil and Solenoid Bracket to Exhaust Manifold Stud	6-7	53-62	—
Heater Outlet Hose to Intake Manifold	3-4	—	27-35
Radiator Hose Clamps	3-4	—	27-35
Front Engine Cover Bolts (Holes 3, 4, 6, 10, 12, 13 and 14)	8-13.5	—	70-120
Remaining Holes	16-24	12-18	—
Timing Pointer / Misfire Sensor	8-12	—	70-106
Fuel Charging Wiring Harness Retaining Nut	16-24	12-18	—
Oil Pan-to-Cover Attaching Screws	16-24	12-18	—
Engine Cover-to-Cylinder Block Attaching Screws	20-28	15-21	—
Rocker Arm Bolts	24-34	18-25	—
Engine Lifting Eyes	16-24	12-18	—
Engine Mount Nuts	96-127	71-94	—
Wire Harness Bracket	16-24	12-18	—
Upper Pickup Tube Bolts	16-24	12-18	—
Clutch Housing-to-Engine Bolts	55-67	41-49	—
Torque Converter Housing-to-Engine Bolts	55-67	41-49	—
Insulator-to-Chassis Bracket Nuts	73-100	54-74	—
Fan Shroud Attaching Bolts	7-10	—	62-89
Oil Pump Screen Cover and Tube Attaching Bolts	14-20	10-15	—
Oil Pressure Sensor to Cylinder Block	11-24	8-18	—
Oil Cooler Adapter-to-Water Pump	2-5	—	20-40

(Continued)

TORQUE SPECIFICATIONS (Cont'd)

Description	N·m	Lb-Ft	Lb-In
Oil Cooler Mounting Bolt Insert to Cylinder Block	54-61	40-45	—
Oil Cooler Adapter-to-Oil Cooler	3-6	—	27-53
Oil Cooler Line to Radiator	24-31	18-23	—
Flywheel Housing-to-Engine Bolts	68-88	50-65	—
Fan Shroud	17-24	—	62-89
Clutch Pressure Plate	27-39	20-29	—
Thrust Plate Retaining Bolts	12-16	9-12	—
Air Conditioning Compressor to Bracket	24-31	18-22	—
Power Steering Pump to Bracket	41-54	30-40	—
Thermactor Pump Holding Bolt	41-54	30-40	—
Alternator Attaching Bolt	41-54	30-40	—
Thermactor Pump and Alternator Bracket to Cylinder Head 3/8-16 Bolt	41-54	30-40	—
Air Conditioning Compressor and Power Steering Pump Bracket to Head	54-71	40-50	—
Thermactor Pump Pivot Bolt	30-40	22-30	—
Thermactor Pump Pulley to Pump Hub	9-12	—	6.5-9
Exhaust Manifold-to-Exhaust Pipe	35-45	26-33	—
Heat Shield, Spark Plug	16-24	12-18	—
Clutch-to-Fan Bolts	16-24	12-18	—
Fan and Clutch Assembly-to-Pulley	16-24	12-18	—
Dipstick Tube Bracket	16-24	12-18	—
EGR Valve Studs	18-26	13-19	—
Exhaust Manifold Fitting Nut	61-75	45-55	—
Upper Intake Manifold Support Bracket	16-24	12-18	—
Secondary Air Injection Manifold Tube — C6 Transmission	23-34	17-25	—
Vacuum Harness Bracket and Nut	17-24	13-18	—
EGR Tube Flange Nuts	41-54	30-40	—
Oil Level Indicator Tube to Exhaust Manifold Stud	16-24	12-18	—

NOTE: Tighten in steps, first to 129-142 N·m (95-105 lb-ft), then to 143-151 N·m (105-112 lb-ft).

SPECIFICATIONS (Continued)

GREASES, LUBRICANTS, SEALERS AND ADHESIVES

Description	Part No.	Specified Ford Equivalent
SAE 10W30 WT Engine Oil	XO-10W30-QSP-DSP	ESE-M2C163-E
Metal Surface Cleaner	F4AZ-19A536-RA	WSE-M5B392-A
Silicone Rubber	D6AZ-19562-BA	ESB-M4G92-A and ESE-M4G195-A
Engine Assembly Lubricant	D9AZ-19579-D	ESR-M99C80-A
Multi-Purpose Grease	DOAZ-19584-AA	ESB-M1C93-B and ESR-M1C159-A
SAE 50WT Engine Oil	SAE 50WT	ESE-M2C39-F
Silicone Gasket Adhesive	F6AZ-19562-A	WSE-M4G323-A6
Threadlock® and Sealer	EOAZ-19554-AA	WSK-M2G315-A5 (Type II)
Perfect Seal Sealing Compound	F2AZ-19554-AA	ESR-M18P2-A and ESE-M4G115-A
Pipe Sealant with Teflon®	D8AZ-19554-A	WSK-M2G350-AZ and ESR-M18P7-A

Vehicle Emission Control Information (VECI) Decal

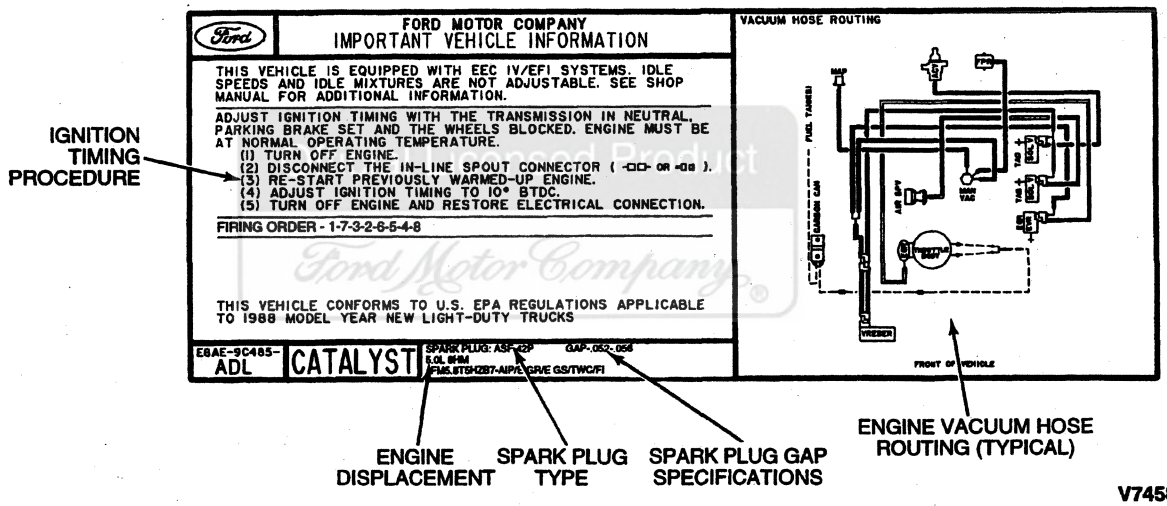

SPECIAL SERVICE TOOLS/EQUIPMENT

SPECIAL SERVICE TOOLS REQUIRED

Tool Number/ Description	Illustration
T64L-6011-EA Cylinder Ridge Reamer	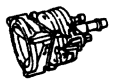 T64L-6011-EA
T65L-6250-A Camshaft Bearing Set	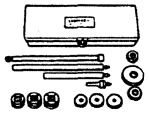 T65L-6250-A

(Continued)

SPECIAL SERVICE TOOLS REQUIRED (Cont'd)

Tool Number/ Description	Illustration
T68P-6135-A Piston Pin Remover/Replacer	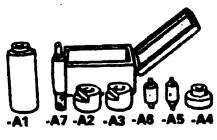 -A1 -A7 -A2 -A3 -A6 -A5 -A4 T68P-6135-A
T70P-6000 Engine Lifting Brackets	T70P-6000

(Continued)

SPECIAL SERVICE TOOLS/EQUIPMENT (Continued)

SPECIAL SERVICE TOOLS REQUIRED (Cont'd)

Tool Number/ Description	Illustration
T71P-6513-B Tappet Bleed Down Wrench	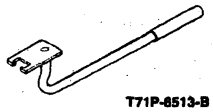 T71P-6513-B
T74P-6666-A Spark Plug Wire Remover	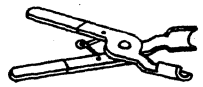 T74P-6666-A
T75L-6392-A Clutch Housing Alignment Tool	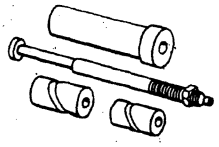 T75L-6392-A
T88T-6701-A Crankshaft Seal Replacer/Cover Aligner	 T88T-6701-A

(Continued)

SPECIAL SERVICE TOOLS REQUIRED (Cont'd)

Tool Number/ Description	Illustration
T89T-6701-AH Rear Oil Seal Replacer	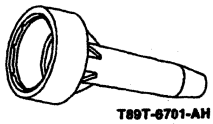 T89T-6701-AH
T95P-6701-EH Rear Crankshaft Seal Remover	T95P-6701-EH ST1061-A

SPECIAL SERVICE TOOLS DESIRED

Tool Number	Description
D79L-6731-A	Oil Filter Wrench
D79L-6731-B	Oil Filter Wrench
D80L-522-A	Gear and Pulley Puller
D81L-6002-C	Piston Ring Compressor
D87L-9280-A	Disconnect Tool (3/8-Inch)
D87L-9280-B	Disconnect Tool (1/2-Inch)
TOOL-4201-C	Dial Indicator with Bracketry
TOOL-6331-E	Main Bearing Insert Tool
TOOL-6500-E	Tappet Leakdown Tester

Official Licensed Parts Ford Motor Company

SECTION 03-01B Engine, 7.5L MFI

SUBJECT	PAGE
VEHICLE APPLICATION	03-01B-1
DESCRIPTION AND OPERATION	
Camshaft	03-01B-3
Crankshaft	03-01B-3
Drive Belt System	03-01B-6
Emission Calibration Label	03-01B-2
Engine	03-01B-1
Engine Code Information	03-01B-2
Engine Cooling System	03-01B-4
Engine Identification	03-01B-2
Engine Lubrication System	03-01B-3
Oil Pan	03-01B-4
Oil Pump	03-01B-3
Exhaust Emission Control System	03-01B-3
Induction System	03-01B-3
Positive Crankcase Ventilation System	03-01B-3
Valve Train	03-01B-3
IN-VEHICLE SERVICE	
Camshaft	03-01B-32
Camshaft Rear Bearing Cover	03-01B-44
Connecting Rod Bearings	03-01B-42
Crankshaft	03-01B-39
Crankshaft Main Bearings	03-01B-39
Crankshaft Pulley/Damper/Crankshaft Front Seal	03-01B-24
Crankshaft Rear Oil Seal	03-01B-43
Cylinder Heads	03-01B-20
Engine Components	03-01B-6
Engine Front Cover	03-01B-26
Exhaust Manifolds	03-01B-34
Left-Hand	03-01B-34
Right-Hand	03-01B-34
Flywheel	03-01B-42
Intake Manifold, Lower	03-01B-18

SUBJECT	PAGE
IN-VEHICLE SERVICE (Cont'd.)	
Intake Manifold, Upper	03-01B-15
Mainshaft Bearing Roller	03-01B-43
Oil Bypass Filter/Adapter/Oil Cooler	03-01B-44
Oil Level Indicator Tube	03-01B-46
Oil Pan/Oil Pump Screen Cover and Tube	03-01B-36
Oil Pump	03-01B-39
Pistons and Connecting Rods	03-01B-40
Rocker Arm	03-01B-12
Sensors	03-01B-47
Oil Pressure Sender	03-01B-47
Timing Chain and Sprockets	03-01B-29
Valve Cover and Gasket	03-01B-11
Valve Spring, Retainer and Valve Stem Seal	03-01B-13
Valve Tappet, Hydraulic	03-01B-14
Water Pump	03-01B-25
REMOVAL AND INSTALLATION	
Camshaft Bearings	03-01B-50
Crankshaft	03-01B-52
Engine	03-01B-47
DISASSEMBLY AND ASSEMBLY	
Engine	03-01B-55
Subassemblies	03-01B-55
Cylinder Block Assembly	03-01B-58
Cylinder Block, Bare	03-01B-58
Cylinder Head	03-01B-55
Pistons, Piston Pins and Rings	03-01B-56
Valve Tappet, Hydraulic	03-01B-57
ADJUSTMENTS	
Valve Clearance	03-01B-58
SPECIFICATIONS	03-01B-59
SPECIAL SERVICE TOOLS/EQUIPMENT	03-01B-64

VEHICLE APPLICATION

F-250 Heavy Duty, F-350, F-Super Duty Chassis Cab and Motorhome

DESCRIPTION AND OPERATION

Engine

The 7.5L (460 CID) MFI V-8 engine has a cast iron cylinder block. The crankshaft is precision-cast, nodular iron alloy and has five main bearings. The pistons are hyper-eutectic cast aluminum alloy, tin-plated. Rocker arms are pedestal-mounted and the valve tappets are hydraulic. Large intake valves and exhaust valves with wear-resistant, hard, chrome-plated stems provide optimum breathing. A low-restriction air cleaner is used for maximum clean air intake. Refer to the charts under Specifications for complete specifications.

The 7.5L (460 CID) MFI engine is optional for F-250, F-350 and standard in the F-Super Duty.

DESCRIPTION AND OPERATION (Continued)

Engine Identification

For quick engine identification, refer to the vehicle emission control information (VECI) decal mounted under the hood. This decal lists engine information required for proper servicing of the engine. An engine identification label is also attached to the engine. The symbol code on the identification tag identifies each engine for determining parts usage, for instance, engine displacement and model year. The vehicle identification number (VIN) also gives engine information. The tenth digit identifies the engine.

Typical VECI Decal

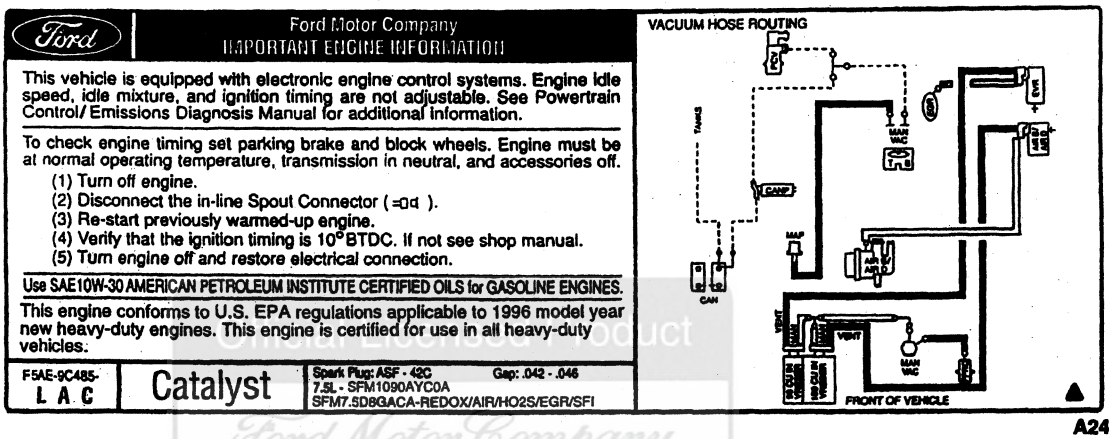

A24036-B

Engine Code Information

An engine code information label located on the valve cover contains an engine build date, an engine plant code and an engine code.

TYPICAL ENGINE CODE LABEL

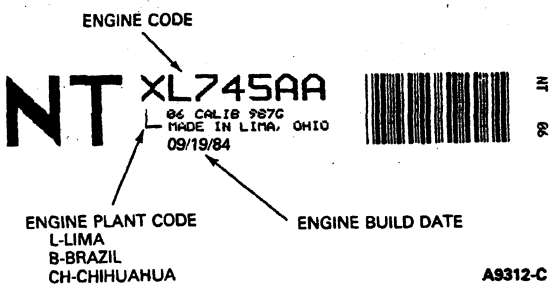

A9312-C

Emission Calibration Label

NOTE: The engine codes and the calibration number must be used when ordering parts or making inquiries about the engine.

The emission calibration number label is located on the left side door or left door post pillar. It identifies the engine calibration number, the engine code number and revision level.

These numbers are used to determine if parts are unique to specific engines.

A10693-B

DESCRIPTION AND OPERATION (Continued)

Exhaust Emission Control System

Operation, removal, installation and required maintenance of the exhaust emission control devices used on the 7.5L (460 CID) MFI engine are covered in the 1996 Powertrain Control / Emissions Diagnosis Manual.[1]

Induction System

The fuel / air mixture needed for burning in the cylinders is provided by multiport fuel injection (MFI).

Fuel is metered into each intake port in a sequential firing order (California only). It is bank-to-bank on 49-State and F-Super Duty. Fuel injector nozzle tips pulse to follow engine firing order in accordance with engine demand through fuel injector nozzle tips mounted on a tuned intake manifold.

The fuel delivery subsystem consists of a high-pressure in-tank mounted fuel pump, and a fuel filter / reservoir delivering fuel from the fuel tank through a chassis-mounted 20-micron fuel filter bracket to a fuel injection supply manifold.

The fuel injection supply manifold incorporates electrically actuated fuel injector nozzle tips directly above each of the engine's eight intake ports. The fuel injector nozzle tips, when energized, spray a metered quantity of fuel into the intake air stream.

A constant fuel pressure drop is maintained across the injector nozzles by a fuel pressure regulator. The fuel pressure regulator is connected in series with the fuel injector nozzle tips and is positioned downstream from them. Excess fuel supplied by the fuel pump, but not required by the engine, passes through the regulator and returns to the fuel tank through a fuel return line.

Crankshaft

The crankshaft is supported by five crankshaft bearings and bearing caps. The crankshaft thrust main bearing (No. 3 bearing insert) limits crankshaft end play and absorbs axial thrust loads applied to the crankshaft ends. The camshaft sprocket, crankshaft sprocket and timing chain / belt connect the crankshaft with the camshaft and provide a 2:1 drive ratio.

Camshaft

The camshaft is installed in the cylinder block and is supported by five camshaft bearings. Thrust loads and end play are limited by a camshaft thrust plate installed at the front of the camshaft.

Valve Train

A hydraulic valve tappet, providing automatic lash adjustment, rides on a camshaft lobe and transfers its up-and-down motion to the rocker arm through a push rod. The rocker arms are pedestal-mounted and pivot on rocker arm seats bolted to the cylinder head. The intake valves and exhaust valves are arranged alternately on the cylinder block.

Positive Crankcase Ventilation System

The 7.5L (460 CID) MFI V-8 engine is equipped with a positive closed-type crankcase ventilation system to purge the crankcase vapors. The PCV valve is threaded into the right-hand valve cover and is sealed by a compression gasket.

Engine Lubrication System

Pressurized oil from the oil pump is directed through a drilled oil passage to the full-flow oil filter and from the oil filter to main oil galleries intersecting the valve tappet guide bores. A drilled gallery (crossover) at the rear of the tappet chamber routes oil to the left bank. The crankshaft main bearings, connecting rod bearings, and camshaft bearings are supplied with oil from the right oil gallery.

Oil flow to the camshaft sprocket and timing chain / belt is through an annulus and drilled passage at the front of the No. 1 camshaft bearing. Oil flow to the rocker arms is through the valve tappets and up the push rods to the arms.

All 7.5L engines are equipped with an engine oil cooler. The engine oil cooler is block-mounted. The compact oil-to-water heat exchanger mounts directly to the left side of the engine, at the oil filter mounting pad.

Oil Pump

The heart of the lubrication system is a full-pressure cast-iron pump. The high capacity gerotor pump is bolted to the bottom of the cylinder block and is driven by a hex shaft from the distributor. The pressure is relief-valve controlled. The oil pump draws oil from the oil pan through an attached oil pump screen cover and tube to provide the necessary volume of oil for engine lubrication.

1 Can be purchased as a separate item.

DESCRIPTION AND OPERATION (Continued)

Oil Pan

The oil pan is a stamped steel part that bolts to the bottom of the cylinder block. The oil pan is a reservoir for engine oil used by the oil pump to lubricate internal engine components.

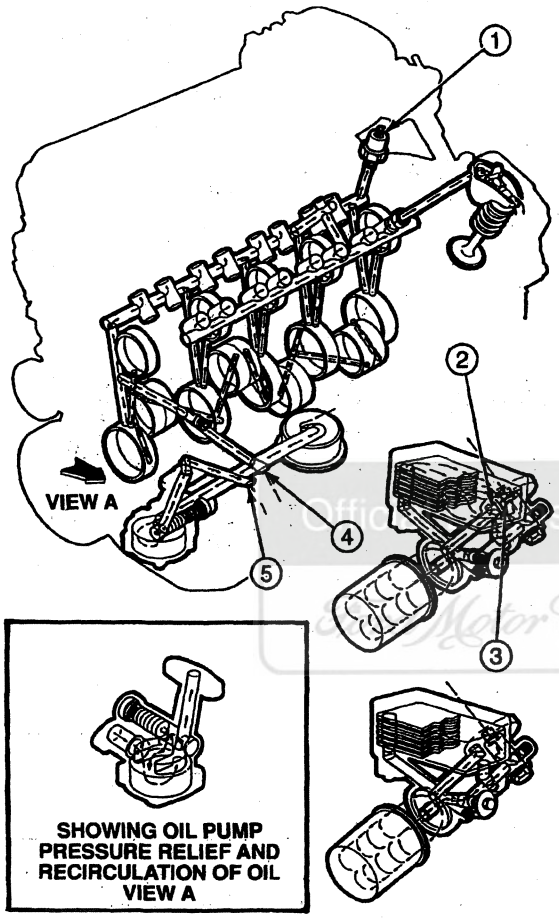

SHOWING OIL PUMP PRESSURE RELIEF AND RECIRCULATION OF OIL VIEW A

VIEW SHOWING ENGINE OIL COOLER BY-PASS FEATURE

A18726-C

Item	Part Number	Description
1	9278	Oil Pressure Sensor
2	—	From Engine to Oil Bypass Filter to Oil Cooler

(Continued)

Item	Part Number	Description
3	—	From Oil Cooler Back to Engine
4	—	From Oil Cooler
5	—	To Oil Bypass Filter

Engine Cooling System

The cooling system is a series-parallel flow design. Coolant flow is from the water pump through passages in the engine front cover (both sides) to the cylinder block. Flow continues through the cylinder block toward the rear of the engine and into the cylinder head at various transfer passages along the length of the cylinder block deck. It then travels from the cylinder heads to the water crossover at the front of the intake manifold, through the water outlet connection and to the top of the radiator.

Motor Company

DESCRIPTION AND OPERATION (Continued)

Cooling System

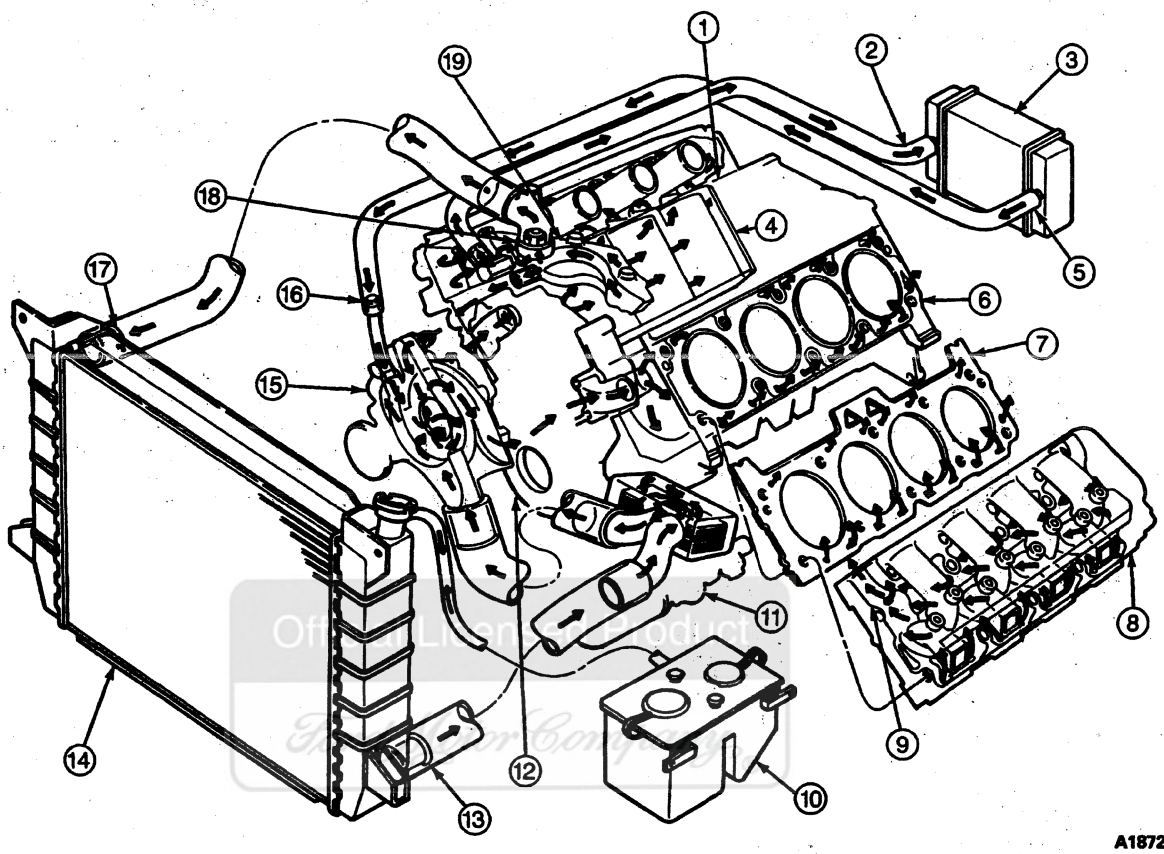

Item	Part Number	Description
1	6049	Cylinder Head (RH)
2	—	Heater Inlet (Part of 18476)
3	18476	Heater Core
4	6010	Cylinder Blocks (RH Bank)
5	—	Heater Outlet (Part of 18476)
6	6010	Cylinder Blocks (LH Bank)
7	6051	Head Gasket
8	6049	Cylinder Head (LH)
9	8592	Water Hose Connection
10	8A080	Radiator Coolant Recovery Reservoir

(Continued)

Item	Part Number	Description
11	6B856	Engine Oil Cooler
12	6019	Engine Front Cover
13	—	Radiator Outlet (Part of 8005)
14	8005	Radiator
15	8501	Water Pump
16	—	Heater Outlet (Part of 18476)
17	—	Radiator Inlet (Part of 8005)
18	8575	Water Thermostat
19	8592	Water Hose Connection

DESCRIPTION AND OPERATION (Continued)

Drive Belt System

Accessories mounted on the front of the engine are belt-driven by the crankshaft using two 6K poly-V drive belts. One drive belt is routed over the air pump pulley, generator pulley, water pump pulley and the crankshaft pulley. The other drive belt is routed over the water pump pulley, automatic tensioner pulley, air conditioning compressor pulley or idler pulley (if equipped), power steering pump pulley and the crankshaft pulley.

IN-VEHICLE SERVICE

Engine Components

The following procedures can be performed with the engine (6007) in the vehicle.

When installing nuts or bolts, oil the threads with lightweight engine oil. Do not oil threads requiring oil-resistant or water-resistant sealer. Refer to Torque Limits chart in the Specifications portion of this section.

The following disassembled views of the 7.5L MFI engine are typical and are to be used as references for procedures in this section. The part descriptions and part numbers in the illustration tables correspond with the Ford Master Parts Catalog.

Official Licensed Product
Ford Motor Company

IN-VEHICLE SERVICE (Continued)

7.5L MFI (460 CID) V-8 Engine, External Disassembled View

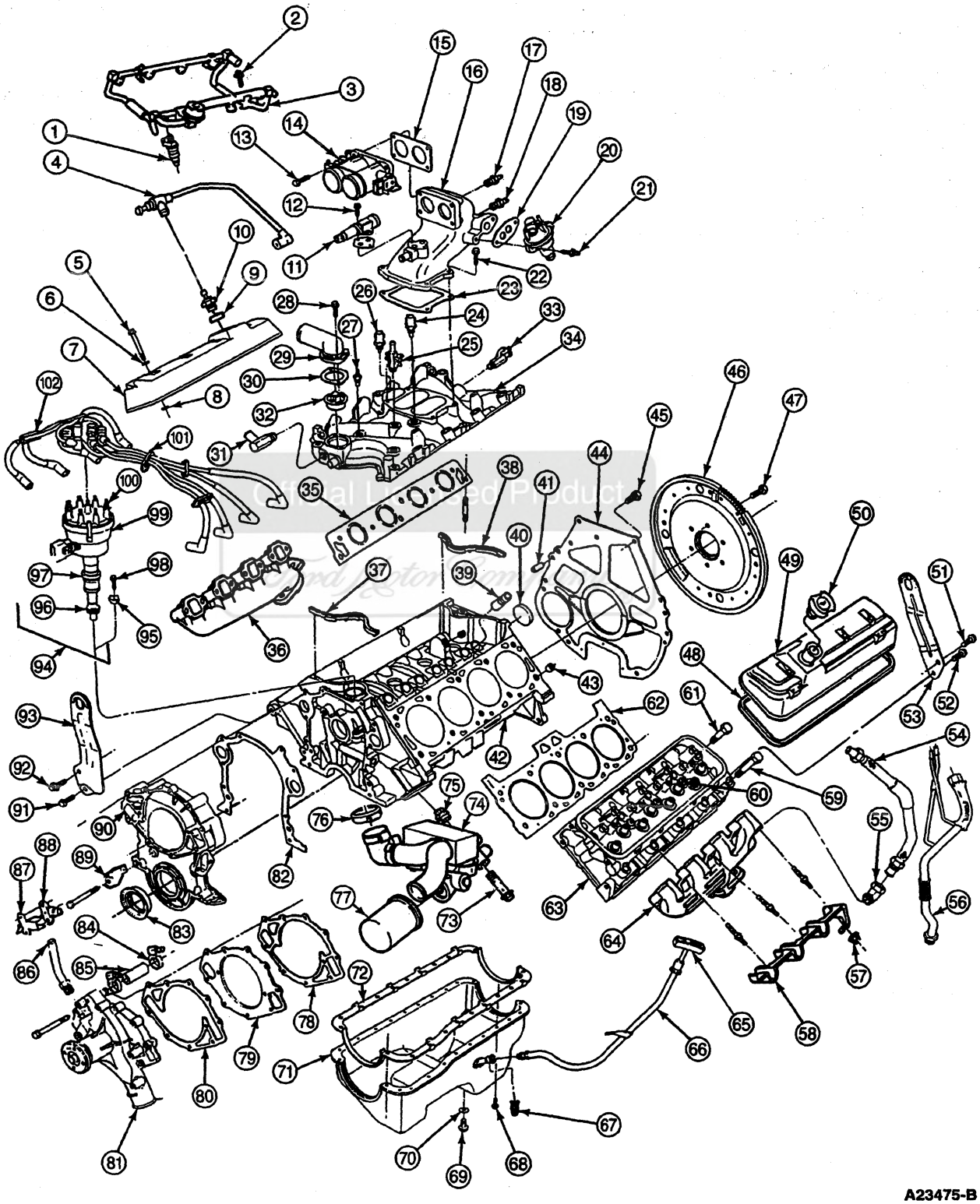

IN-VEHICLE SERVICE (Continued)

Item	Part Number	Description
1	9E527	Fuel Injector Nozzle Tip
2	N802626	Bolt (4)
3	9F792	Fuel Injection Supply Manifold
4	6C324	Crankcase Vent Connector and Hose
5	390768	Bolt (8)
6	6A532	Washer (8)
7	6582	Valve Cover (RH)
8	W623842	Washer (8)
9	6K780	Positive Crankcase Ventilation Valve Gasket
10	6A666	Positive Crankcase Ventilation Valve
11	9F715	Idle Air Control Valve
12	N605893	Bolt (2)
13	390774	Bolt (4)
14	9E926	Throttle Body
15	9E936	Throttle Body Gasket
16	9424	Intake Manifold, Upper
17	386153	Nipple
18	389642	Nipple
19	9D476	EGR Valve Gasket
20	9D475	EGR Valve, Delta PFE for California
21	390715	Stud (2)
22	390712	Bolt (4)
23	9H486	Intake Manifold Upper Gasket
24	12A697	Intake Air Temperature Sensor
25	9A474	Intake Manifold Vacuum Outlet Fitting and Cap
26	12648	Sensor
27	10884	Water Temperature Indicator Sender Unit
28	358720	Bolt (2)
29	8592	Water Hose Connection
30	8255	Water Outlet Connection Gasket
31	38768	Fitting
32	8575	Water Thermostat
33	9A474	Intake Manifold Vacuum Outlet Fitting and Cap
34	9424	Intake Manifold, Lower
35	—	Intake Manifold Gasket (Part of 9433)
36	9430	Exhaust Manifold (RH)
37	—	Seal, Intake Manifold-to-Cylinder Block (Part of 9433)

(Continued)

Item	Part Number	Description
38	—	Seal, Intake Manifold-to-Cylinder Block (Part of 9433)
39	6500	Valve Tappet (16)
40	6266	Camshaft Rear Bearing Cover
41	6397	Flywheel Housing to Block Dowel (2)
42	6010	Cylinder Blocks
43	6A008	Cylinder Head to Block Dowel (4)
44	7007	Engine Rear Plate
45	57658	Bolt
46	6375	Flywheel
47	390639	Bolt
48	6584	Valve Cover Gasket (2)
49	6582	Valve Cover (LH)
50	6766	Oil Filler Cap
51	56559	Bolt
52	42997	Bolt
53	17A084	Engine Lifting Eye (LH Rear)
54	9D477	EGR Valve to Exhaust Manifold Tube
55	N801906	Elbow
56	9D474	EGR Valve (Delta PFE) to Manifold Tube (California Only)
57	33771	Nut (4)
58	12A406	Spark Plug Heat Shield (LH)
59	6065	Bolt (10)
60	371485-S	Insert (6)
61	6065	Bolt (10)
62	6051	Head Gasket
63	6049	Cylinder Head (2)
64	9431	Exhaust Manifold (LH)
65	6750	Oil Level Dipstick
66	6754	Oil Level Indicator Tube
67	N808064-S100	Clip
68	391496-S2	Bolt (23)
69	6730	Oil Pan Drain Plug
70	6734	Washer
71	6675	Oil Pan
72	6710	Oil Pan Gasket
73	6894	Bolt
74	6B856	Engine Oil Cooler
75	6890	Oil Filter Mounting Insert
76	391001	Clamp
77	6714	Oil Bypass Filter
78	8507	Water Pump Housing Gasket
79	8508	Water Pump Cover

(Continued)

Licensed Product Ford Motor Company

IN-VEHICLE SERVICE (Continued)

Item	Part Number	Description
80	8513	Water Pump Cover Gasket
81	8501	Water Pump
82	6020	Engine Front Cover Gasket
83	6700	Crankshaft Front Seal
84	389772	Clamp (2)
85	8548	Water Bypass Tube
86	18599	Hot Water Heater Elbow Connection
87	6023	Shield/Timing Pointer (California Only)
88	6C365	Misfire Sensor (California Only)
89	6023	Timing Pointer
90	6019	Engine Front Cover

(Continued)

Item	Part Number	Description
91	56559	Bolt
92	42997	Bolt
93	17A084	Engine Lifting Eye (RH Front)
94	12127	Distributor
95	12270	Hold-Down Clamp
96	12390	Gear
97	12127	Distributor
98	42955	Bolt
99	12A217	Distributor Base Adapter
100	12106	Distributor Cap
101	12286	Distributor to Spark Plug Wire
102	12297	Ignition Wire Separator

Official Licensed Product
Ford Motor Company

IN-VEHICLE SERVICE (Continued)

7.5L MFI (460 CID) V-8 Engine, Internal Disassembled View

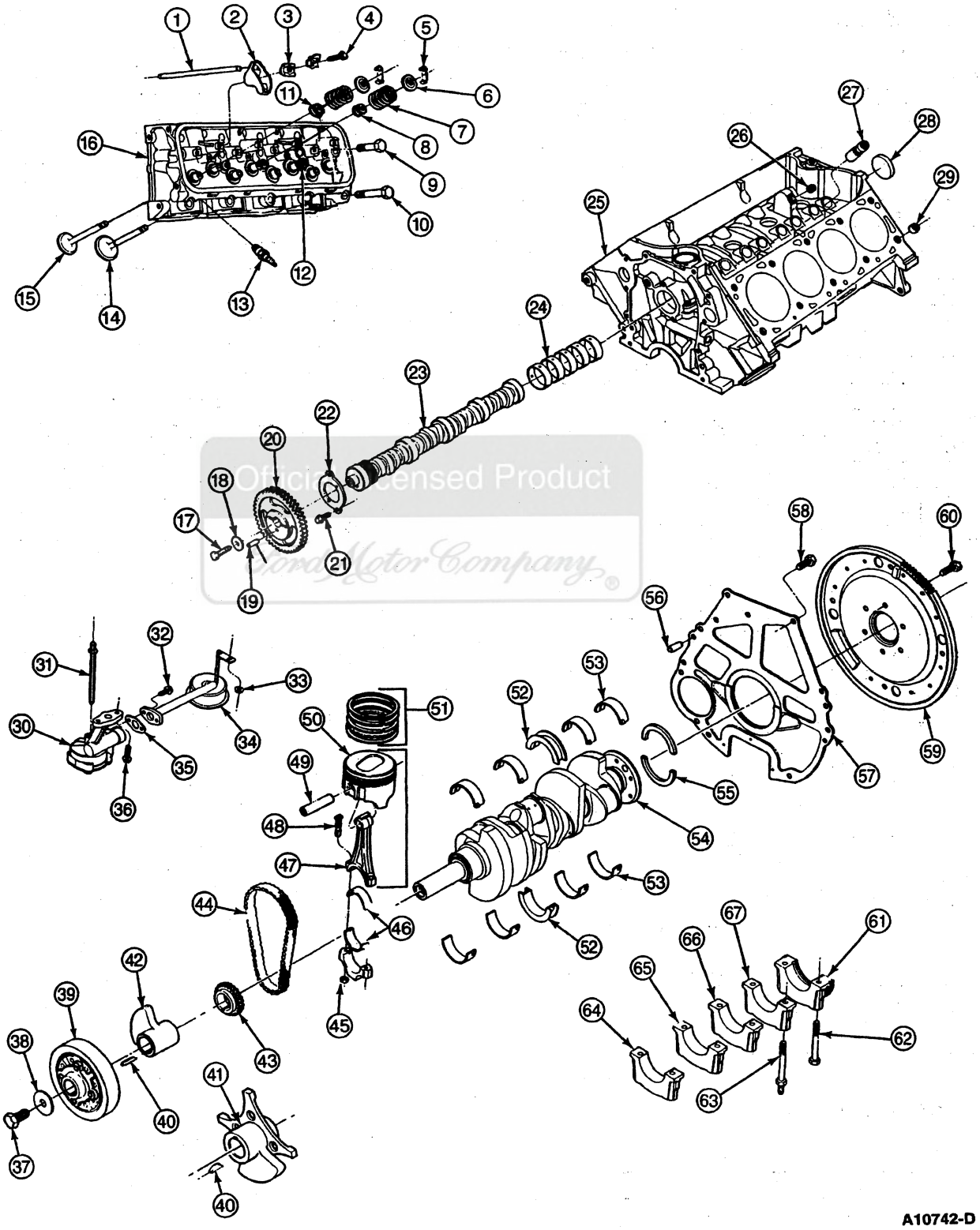

Official Licensed Product
Ford Motor Company

IN-VEHICLE SERVICE (Continued)

Item	Part Number	Description
1	6565	Push Rod (16)
2	6564	Rocker Arm (16)
3	6A528	Rocker Arm Seat (16)
4	385658-S2	Bolt (16)
5	6518	Valve Spring Retainer Key (32)
6	6514	Valve Spring Retainer (16)
7	6513	Valve Spring (16)
8	6571	Valve Stem Seal (8)
9	6065	Bolt (10)
10	6065	Bolt (10)
11	6571	Valve Stem Seal (8)
12	371485-S	Insert (6)
13	12405	Spark Plug (8)
14	6507	Intake Valve (8)
15	6505	Exhaust Valve (8)
16	6049	Cylinder Head
17	43001-S2	Bolt
18	6278	Washer
19	73328	Dowel
20	6256	Camshaft Sprocket
21	42910-S	Bolt (2)
22	6269	Camshaft Thrust Plate
23	6250	Camshaft
24	6261	Camshaft Bearing (5)
25	6010	Cylinder Blocks
26	87837-S	Plug
27	6500	Valve Tappet (16)
28	6266	Camshaft Rear Bearing Cover
29	6A008	Cylinder Head to Block Dowel (4)
30	6600	Oil Pump
31	6A618	Oil Pump Intermediate Shaft
32	358761-S	Bolt (2)
33	382802-S2	Nut
34	6622	Oil Pump Screen Cover and Tube
35	6626	Oil Pump Inlet Tube Gasket
36	57647-S	Bolt (2)

(Continued)

Item	Part Number	Description
37	376706-S	Bolt
38	6378	Washer
39	6316	Crankshaft Vibration Damper
40	74151-S	Key
41	6M265	Spacer / Trigger Wheel (California Only)
42	6359	Crankshaft Damper Spacer
43	6306	Crankshaft Sprocket
44	6268	Timing Chain
45	6212	Nut (16)
46	6211	Connecting Rod Bearing (8)
47	6200	Connecting Rod (8)
48	6214	Bolt (16)
49	6135	Piston Pin (8)
50	6108	Piston
51	6148	Partial Piston Ring Set (8)
52	6337	Crankshaft Thrust Main Bearing
53	6333	Crankshaft Main Bearing (4 Places)
54	6303	Crankshaft
55	6701	Crankshaft Rear Oil Seal
56	6397	Flywheel Housing to Block Dowel (2)
57	7007	Engine Rear Plate
58	57658-S2	Bolt
59	6375	Flywheel
60	390639-S	Bolt
61	—	Crankshaft Main Bearing Cap (Part of 6010)
62	386574-S	Bolt (9)
63	388488-S	Stud
64	—	Crankshaft Main Bearing Cap (Part of 6010)
65	—	Crankshaft Main Bearing Cap (Part of 6010)
66	—	Crankshaft Main Bearing Cap (Part of 6010)
67	—	Crankshaft Main Bearing Cap (Part of 6010)

Official Licensed Product Ford Motor Company

Valve Cover and Gasket

SPECIAL SERVICE TOOL(S) REQUIRED

Description	Tool Number
Spark Plug Wire Remover	T74P-6666-A

Removal

1. Disconnect battery ground cable (14301).

IN-VEHICLE SERVICE (Continued)

2. On the right side of the engine (6007), disconnect the secondary air injection system, if so equipped, including brackets, and position out of the way. On the left side of the engine, remove the ignition coil mounting strap (12043) and position out of the way.
3. Disconnect distributor to spark plug wires (12286) from spark plugs (12405) using Spark Plug Wire Remover T74P-6666-A and position distributor to spark plug wires out of the way.
4. Remove positive crankcase ventilation valve (PCV valve)(6A666) from the valve cover (6582) (for right valve cover).
5. Position wiring and vacuum harnesses to gain access in order to remove right valve cover.
6. Remove attaching bolts and remove the valve covers.
7. Remove the valve cover gasket (6584) from the valve covers.

Installation

1. Clean valve cover and cylinder head sealing surface. Position valve cover gasket in valve cover seal groove, making sure that the valve cover gasket tang is aligned with notch in the valve cover.
2. Position valve covers on the cylinder head (6049). Starting with rearmost bolt and working forward, tighten the four valve cover bolt and washer assemblies to 12-15 N·m (9-11 lb-ft).
3. Install positive crankcase ventilation valve with gasket into right valve cover.
4. Reconnect distributor to spark plug wires at spark plugs. Install ignition coil mounting strap.
5. Connect secondary air injection bypass valve and bracket assembly.
6. Install secondary air injection air supply tube and hose at secondary air injection bypass valve.
7. NOTE: When the battery (10655) has been disconnected and reconnected, some abnormal drive symptoms may occur while the powertrain control module (PCM)(12A650) relearns its adaptive strategy. The vehicle may need to be driven 16 km (10 miles) or more to relearn the strategy.

   Connect battery ground cable.

Rocker Arm

Removal

1. Remove the valve cover (6582). Refer to Valve Cover and Gasket in the In-Vehicle Service portion of this section.
2. Remove rocker arm seat bolt, rocker arm seat (6A528) and rocker arm (6564).

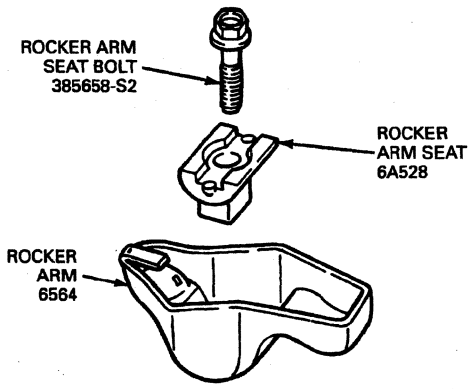

A3236-E

Installation

1. Apply Ford Multi-Purpose Grease DOAZ-19584-AA or equivalent meeting Ford specification ESR-M1C159-A to the top of the intake and exhaust valve stems, the rocker arms and rocker arm seats.
2. NOTE: Make sure rocker arm seat is oriented in the rocker arm in original position.

   Position the No. 1 piston (6108) at TDC at the end of the compression stroke (Position No. 1). Install the rocker arm, rocker arm seat, and rocker arm seat bolt on the following intake valves (6507) and exhaust valves (6505):

   No. 1 intake valve No. 1 exhaust valve

   No. 3 intake valve No. 8 exhaust valve

   No. 7 intake valve No. 5 exhaust valve

   No. 8 intake valve No. 4 exhaust valve
3. Make sure the rocker arm seat base is inserted into its slot on the cylinder head (6049) before tightening the rocker arm seat bolts. Tighten the rocker arm seat bolts to 25-34 N·m (18-25 lb-ft).

Official Licensed Product

IN-VEHICLE SERVICE (Continued)

4. Position the crankshaft (6303) in Position No. 1 and install the rocker arm, rocker arm seat, and a rocker arm seat bolt on the following intake valves and exhaust valves:

   No. 2 intake valve No. 2 exhaust valve

   No. 4 intake valve No. 3 exhaust valve

   No. 5 intake valve No. 6 exhaust valve

   No. 6 intake valve No. 7 exhaust valve

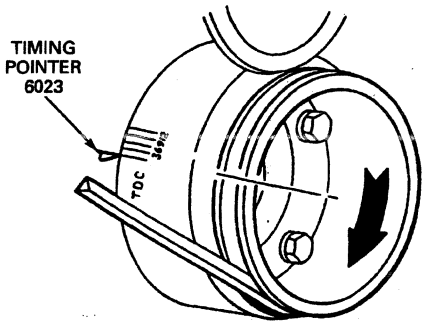

POSITION 1 – NO. 1 AT TDC AT END OF COMPRESSION STROKE.
POSITION 2 – ROTATE THE CRANKSHAFT 360 DEGREES (ONE REVOLUTION) CLOCKWISE FROM POSITION 1.
A7908-B

5. Make sure the rocker arm seat base is inserted into its slot on the cylinder head before tightening the rocker arm seat bolts. Tighten the rocker arm seat bolts to 25-34 N·m (18-25 lb-ft). Adjust the valve clearance. Refer to Adjustments in this section.
6. Install valve cover and gasket. Refer to Valve Cover and Gasket in the In-Vehicle Service portion of this section.

Valve Spring, Retainer and Valve Stem Seal

If the intake valve (6507) or exhaust valve (6505) has not been damaged, the valve spring (6513), valve stem seals (6571), valve spring retainer key (6518) and valve spring retainer (6514) may be replaced by holding the affected intake valve or exhaust valve against its seat using compressed air. Use an appropriate air line tool installed in the spark plug hole. A minimum of 965 kPa (140 psi) line pressure is required.

NOTE: If air pressure does not hold the valve shut, the valve can be damaged and the cylinder head (6049) must be removed and serviced. Refer to Section 03-00.

SPECIAL SERVICE TOOL(S) REQUIRED

Description	Tool Number
Valve Spring Compressor	T70P-6049-A
Valve Seal Remover	T73P-6571-A

Removal

1. Remove the valve cover (6582). Refer to Valve Cover and Gasket in the In-Vehicle Service portion of this section.
2. Remove the rocker arm (6564) and rocker arm seat (6A528). Refer to Rocker Arm in the In-Vehicle Service portion of this section.
3. Using Valve Spring Compressor T70P-6049-A, compress the valve spring and remove the valve spring retainer keys, valve spring retainer, and valve spring. Remove and discard the valve stem seal.

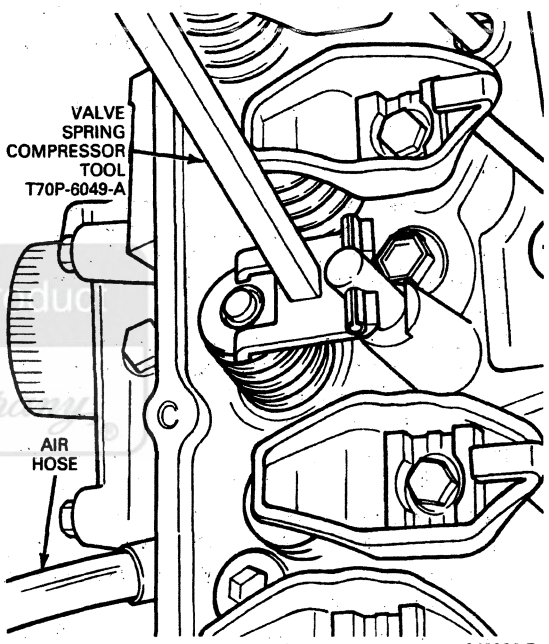

A10098-B

4. If air pressure has forced the piston (6108) to the bottom of the cylinder, any removal of air pressure will allow the intake valve or exhaust valve to fall into the cylinder. A rubber band, tape or string wrapped around the end of adjacent valve stems will prevent this condition and will still allow enough travel to check the intake valve or exhaust valve for binds.
5. Inspect the valve stem for damage. Rotate the intake valve or exhaust valve and check the stem tip for eccentric movement. Move the intake valve or exhaust valve up and down through normal travel in the valve guide and check the stem for binds. If the intake valve or exhaust valve has been damaged, it will be necessary to remove the cylinder head and service. Refer to Section 03-00 for cylinder head service procedures.

IN-VEHICLE SERVICE (Continued)

Installation

1. NOTE: Unique exhaust and intake guide-mounted valve stem seals are required and care should be used to install the correct valve stem seal in the appropriate location. The valve stem seals are identified on one end with IN for intake and EX for exhaust.

   Install new valve stem seals as follows:

   a. With intake valves and exhaust valves in cylinder head, place plastic installation cap over end of valve stem. Lubricate the surface of the plastic cap to aid seal installation.

   b. Slide valve stem seal carefully over cap and push valve stem seal down until jacket touches top of valve guide.

   c. Remove plastic installation cap. Using Valve Seal Remover T73P-6571-A push the valve stem seal down until it bottoms on the valve guide.

2. Apply Ford Multi-Purpose Grease DOAZ-19584-AA or equivalent meeting Ford specification ESB-M1C93-B and ESR-M1C159-A to all contact surfaces of the rocker arm. Install push rod (6565). Install rocker arm and rocker arm seat. Refer to Rocker Arm in the In-Vehicle Service portion of this section.
3. Install the valve cover. Refer to Valve Cover and Gasket in the In-Vehicle Service portion of this section.

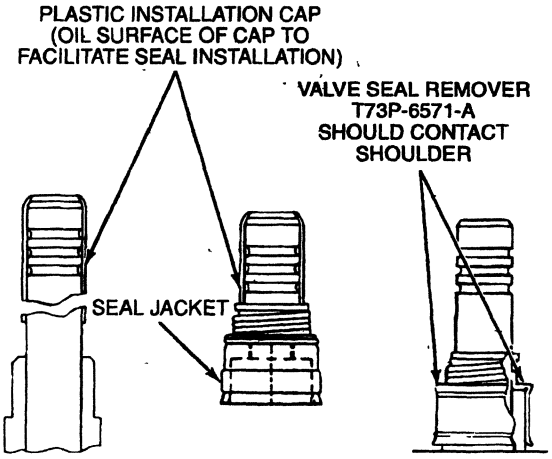

4. Install the spark plug (12405) and tighten to 7-14 N·m (5-10 lb-ft).

Valve Tappet, Hydraulic

The following procedure is applicable for removing one or all of the valve tappets (6500). Before replacing a hydraulic valve tappet for noisy operation, make sure the noise is not caused by improper valve clearance or by worn rocker arms (6564) or push rods (6565).

Removal

1. Remove upper intake manifold (9424) and throttle body (9E926). Refer to Intake Manifold, Upper, in the In-Vehicle Service portion of this section.
2. Remove the valve covers (6582). Refer to Valve Cover and Gasket in the In-Vehicle Service portion of this section. Loosen the rocker arm seat bolts and turn rocker arms to one side.

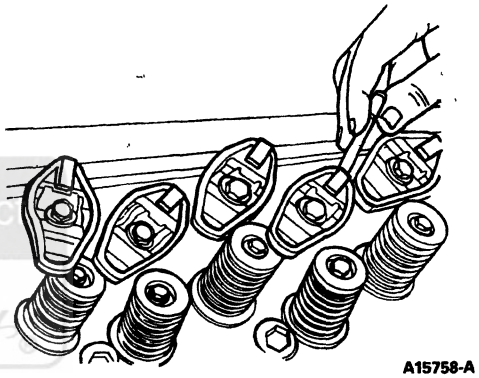

3. Remove the push rods. Keep push rods in sequence so they can be installed in their original locations.
4. Remove the valve tappets with a magnet. Place them in a rack in sequence. Rotate valve tappets back and forth to loosen them from gum or varnish deposits.

Refer to Section 03-00 for cleaning, inspection and testing procedures. If necessary to disassemble valve tappet, refer to Valve Tappet, Hydraulic, under Subassemblies in the Disassembly and Assembly portion of this section.

Installation

1. Clean the outside of valve tappets. Valve tappets and bores are to be lubricated with recommended engine oil before installation. Install the valve tappets into their original bores. Check any new valve tappet for free fit in bore to which it is to be installed. Prior to installation of a new valve tappet, make sure valve tappet is full of oil by working the valve tappet plunger up and down until the valve tappet fills with fluid and all traces of air bubbles has disappeared.
2. Install push rods in original positions. Apply Ford Multi-Purpose Grease DOAZ-19584-AA or equivalent meeting Ford specification ESB-M1C93-B to valve stem tips and push rod ends.

Ford Motor Company Proprietary Product

IN-VEHICLE SERVICE (Continued)

3. Position the rocker arms over the push rods. Tighten the rocker arm seat bolts. Refer to Rocker Arm in the In-Vehicle Service portion of this section.
4. Install valve covers. Refer to Valve Cover and Gasket in the In-Vehicle Service portion of this section.
5. Install upper intake manifold and throttle body. Refer to Intake Manifold, Upper, in the In-Vehicle Service portion of this section.

Intake Manifold, Upper

Removal

1. Remove air cleaner outlet tube (9B659).
2. Disconnect battery ground cable (14301).
3. Disconnect throttle linkage at throttle ball and automatic transmission linkage, if so equipped, from throttle body (9E926). Remove two bolts securing bracket to upper intake manifold (9424) and position bracket with cables out of the way.

Official Licensed Product
Ford Motor Company

Throttle Body and Upper Intake Manifold Assembly

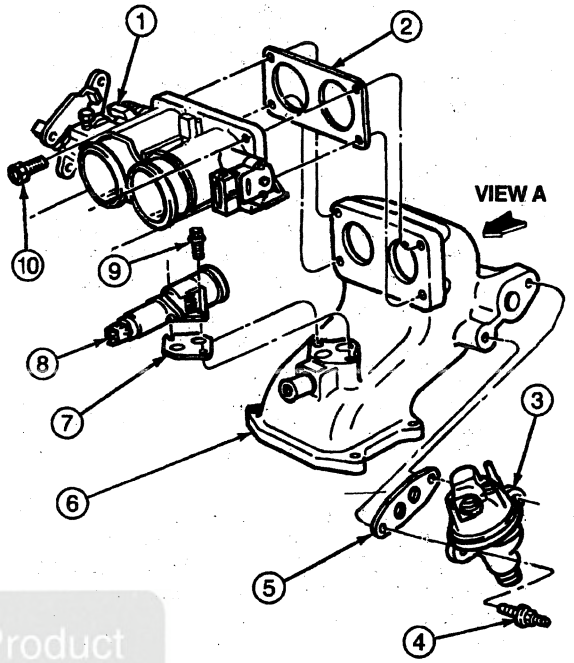

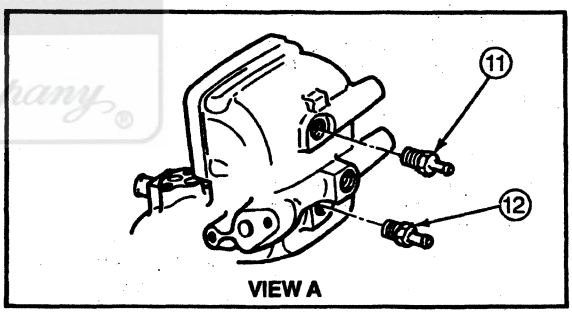

V5863-F

Item	Part Number	Description
1	9E926	Throttle Body
2	9E936	Throttle Body Gasket
3	9F483	EGR External Pressure Valve
4	390715-S36	Stud, 5/16-18 x 18 x 2.505 Hex Shoulder Pilot Stud
5	9D476	EGR Valve Gasket
6	9424	Intake Manifold
7	9F670	Idle Air Control Gasket
8	9F715	Idle Air Control Valve
9	N605893-S8	Bolt, M6 x 25 mm Hex-Head UBS (2 Req'd)
10	390774-S8	Bolt, 5/16 x 1.5 Hex-Head UBS (6 Req'd)
11	389642-S8	Connector, 3/8 Hose x 3/8 External Pipe
12	386153-S101	Connector, 1/4 Hose x 3/8 External Pipe

IN-VEHICLE SERVICE (Continued)

4. Disconnect electrical connectors at:
   a. idle air control valve (IAC valve)(9F715)
   b. throttle position sensor (TP sensor)(9B989)
   c. EGR valve sensor (9G428)
5. Disconnect upper intake manifold vacuum fitting connections by disconnecting:
   a. vacuum line to MAP sensor
   b. vacuum line to EGR external pressure valve (9F483)
6. Disconnect EGR and PCV systems by disconnecting:
   a. EGR valve flange nut
   b. PCV hose at rear of upper intake manifold
7. Disconnect idle air control valve clean air supply hose, connected to idle air control valve port.

EGR, 49-State Application

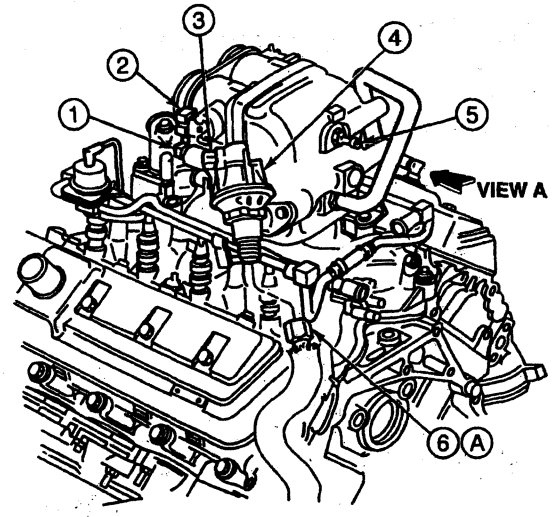

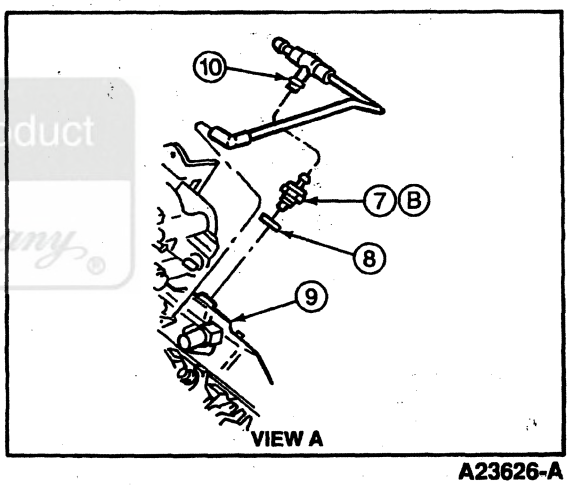

A23626-A

Item	Part Number	Description
1	9F715	Idle Air Control Valve
2	9B989	Throttle Position Sensor
3	9G428	EGR Valve Sensor
4	9F483	EGR External Pressure Valve
5	386153-S101	Nipple for EGR Vacuum Supply Hose
6	9D477	EGR Valve to Exhaust Manifold Tube
7	6A666	Positive Crankcase Ventilation Valve
8	6K780	Positive Crankcase Ventilation Valve Gasket
9	6582	Valve Cover
10	6C324	Crankcase Vent Connector and Hose
A	—	Tighten to 34-65 N·m (25-48 Lb-Ft)

(Continued)

Official Licensed Product
Ford Motor Company

IN-VEHICLE SERVICE (Continued)

Item	Part Number	Description
B	—	Tighten to 13-26 N·m (10-19 Lb-Ft)

EGR, California Application

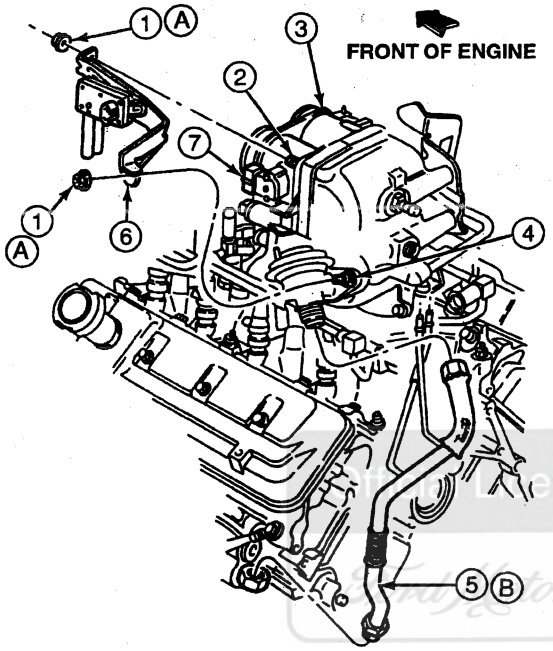

A25135-A

Item	Part Number	Description
1	—	Nut (Part of 9J433)
2	—	Stud (Part of 9E926)
3	9E926	Throttle Body
4	—	Stud (Part of 9F483)
5	9D477	EGR Tube Assy
6	9J433	Transducer Assy
7	9B989	Throttle Position Sensor
A	—	Tighten to 13-16 N·m (10-12 Lb-Ft)
B	—	Tighten to 34-65 N·m (25-48 Lb-Ft)

8. Remove four upper intake manifold retaining bolts.
9. Remove upper intake manifold and throttle body assembly.

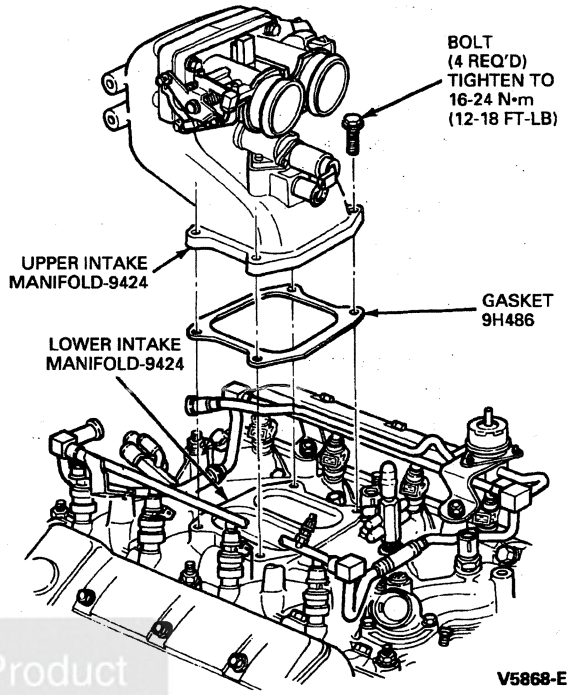

V5868-E

Installation

1. Clean and inspect the mounting faces of the lower and upper intake manifolds.
2. Position new gasket on lower intake mounting face. The use of alignment studs may be helpful.
3. Install upper intake manifold and throttle body to lower intake manifold, making sure gasket remains in place (if alignment studs are not used).
4. Install four upper intake manifold retaining bolts. Tighten to 16-24 N·m (12-18 lb-ft).
5. Install EGR valve to exhaust manifold tube (9D477).
6. Connect PCV hose to rear of upper intake manifold.
7. Connect vacuum lines to MAP sensor and EGR external pressure valve.
8. Position throttle linkage bracket with cables to upper intake manifold. Install two attaching bolts and tighten to specification. Connect throttle cable and automatic transmission kickdown cable to throttle body.
9. Connect electrical connectors at idle air control valve, throttle position sensor, and EGR valve sensor.
10. Connect idle air control valve clean air supply hose.

Ford Motor Company Licensed Product

IN-VEHICLE SERVICE (Continued)

11. NOTE: When the battery (10655) has been disconnected and reconnected, some abnormal drive symptoms may occur while the powertrain control module (PCM)(12A650) relearns its adaptive strategy. The vehicle may need to be driven 16 km (10 miles) or more to relearn the strategy.

    Connect battery ground cable.
12. Install air cleaner outlet tube.

Intake Manifold, Lower

SPECIAL SERVICE TOOL(S) REQUIRED

Description	Tool Number
Spark Plug Wire Remover	T74P-6666-A

Removal

1. NOTE: On F-250 and F-350 vehicles, it is possible to remove upper intake manifold (9424) and lower intake manifold as an assembly.

   Remove air cleaner outlet tube (9B659) and engine air cleaner (ACL)(9600).
2. Disconnect battery ground cable (14301).
3. Position a drain pan and drain radiator (8005).
4. Remove secondary air injection system from right side of engine (6007).
5. Remove ignition coil mounting strap (12043) from engine and remove high-tension lead at the ignition coil (12029).
6. Disconnect and remove EGR valve to exhaust manifold tube (9D477).
7. Disconnect upper radiator hose (8260) at engine.
8. Disconnect heater hoses at lower intake manifold and water pump (8501). Loosen water bypass tube (8548) at lower intake manifold.
9. Disconnect positive crankcase ventilation valve (PCV valve)(6A666). Disconnect all the vacuum lines at rear of lower intake manifold and tag them for reference during installation.
10. Disconnect distributor to spark plug wires (12286) at the spark plugs (12405) using Spark Plug Wire Remover T74P-6666-A and move out of the way. Disconnect and remove the distributor cap (12106) and distributor to spark plug wires as an assembly.

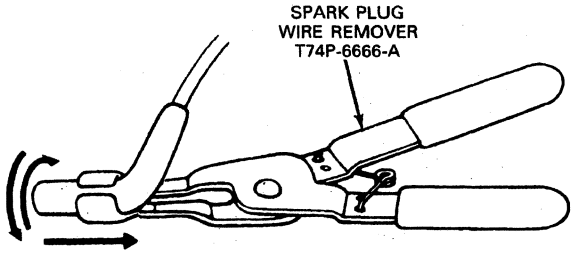

11. Remove distributor (12127). Refer to Section 03-07A.

    Disconnect accelerator linkage and transmission kickdown linkage at the throttle body (9E926). Remove speed control linkage bracket, if so equipped, from the upper intake manifold and disconnect it from the throttle body. Remove bolts holding accelerator linkage cable, and position linkage out of way.
12. Perform all fuel charging system pre-service procedures. Refer to Section 03-04B. Using Spring Lock Coupling Disconnect Tool D87L-9280-A or -B or equivalent, disconnect fuel lines at fuel injection supply manifold (9F792).
13. Disconnect engine wiring harness from main wiring harness engine. Remove engine wiring harness and lower intake manifold as an assembly.
14. Disconnect engine vacuum harness from vacuum reservoir at right-hand fender apron.
15. **CAUTION: If necessary to pry lower intake manifold away from the cylinder heads (6049), do not damage the gasket sealing surfaces.**

    Remove attaching bolts. Remove lower intake manifold using engine lifting eyes (17A084).
16. Remove and discard intake manifold gaskets and front and rear intake manifold-to-cylinder block seals.
17. Transfer components as required.
18. Remove all gasket material from the machined surfaces of the lower intake manifold. Clean the lower intake manifold in a suitable solvent and dry it with compressed air.
19. Inspect the lower intake manifold for cracks, damaged gasket surfaces, or other wear or damage that would make it unfit for further service. Replace all fasteners that are stripped or otherwise damaged. Remove all filings and foreign matter that may have entered the lower intake manifold as a result of service.

Ford Motor Company Confidential Licensed Product

IN-VEHICLE SERVICE (Continued)

Installation

1. Clean mating surfaces of lower intake manifold, cylinder heads, and cylinder blocks (6010). Use a solvent such as Metal Surface Cleaner F4AZ-19A536-RA or equivalent meeting Ford specification WSE-M5B392-A.
2. Apply a 3.175-mm (1/8-inch) diameter bead of Gasket Maker E2AZ-19562-B or equivalent meeting Ford specification WSK-M2G348-A5 in and along the joint, the full width of the cylinder block seal mounting surface (four corners) as shown in the following illustration.

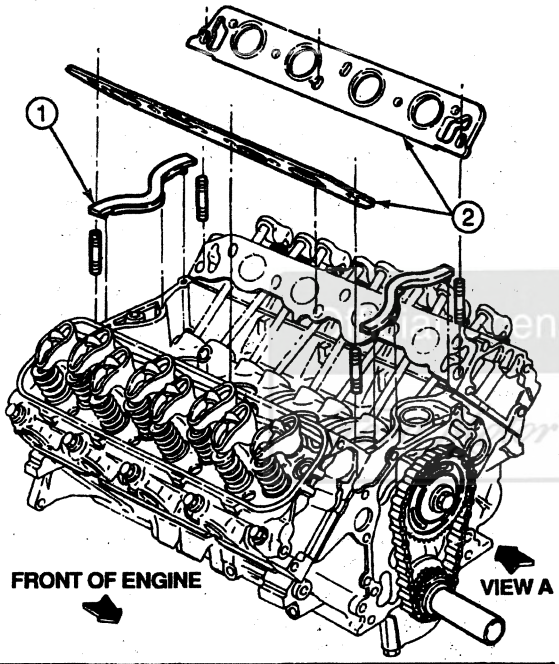

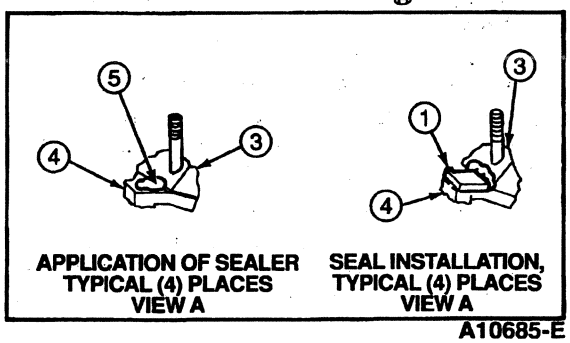

A10685-E

Item	Part Number	Description
1	—	Seal, Intake Manifold-to-Cylinder Block (Part of 9433)
2	—	Intake Manifold Gasket (Part of 9433)
3	6049	Cylinder Head
4	6010	Cylinder Blocks
5	E2AZ-19562-B	Gasket Maker (4 Places)

(Continued)

3. Install the front and rear intake manifold-to-cylinder block seals. Press front and rear intake manifold-to-cylinder block seals firmly into place, distributing sealer into junction of cylinder blocks and cylinder head as shown.
4. Install intake manifold gasket.
5. NOTE: When lower intake manifold is in place, run finger around seal area to make sure front and rear intake manifold-to-cylinder block seals are in place. If front and rear intake manifold-to-cylinder block seals have shifted, remove lower intake manifold and reposition front and rear intake manifold-to-cylinder block seals.

   Carefully place lower intake manifold into position over four studs in ends of cylinder heads.
6. Make sure intake manifold gaskets are properly aligned. Then, install attaching bolts and stud bolts into holes 1 through 10.

Bolt Tightening Order

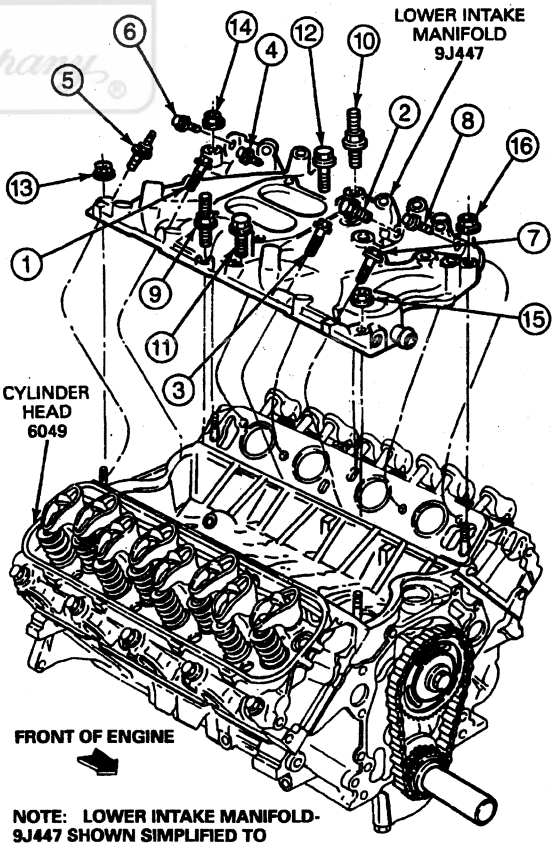

A10686-D

7. Install bolts into holes 11 and 12.

IN-VEHICLE SERVICE (Continued)

8. The lower intake manifold fasteners are secured following a three-step rundown procedure.
   a. Install nuts onto studs 13 through 16. Tighten bolts 1 through 12 in sequence to 11-16 N·m (8-11 lb-ft). Tighten nuts 13 through 16 in sequence to 11-16 N·m (8-11 lb-ft).
   b. Tighten bolts and nuts 1 through 16 in sequence to 16-30 N·m (12-22 lb-ft).
   c. Tighten bolts and nuts 1 through 16 in sequence to 30-47 N·m (22-35 lb-ft).
   d. Repeat Step 8c to make sure intake manifold has fully seated.
9. Install EGR valve to exhaust manifold tube and secondary air injection system.
10. Install water bypass tube to lower intake manifold.
11. Connect upper radiator hose to engine.
12. Rotate crankshaft vibration damper (6316) until No. 1 piston is at TDC at end of compression stroke. Install the distributor. Refer to Section 03-07A.
13. Connect heater hoses at lower intake manifold and water pump.
14. Connect positive crankcase ventilation valve.
15. Connect fuel lines to fuel injection supply manifold.
16. Install ignition coil mounting straps.
17. Complete all electrical connections.
18. Position accelerator linkage on upper intake manifold. Attach accelerator linkage cable. Attach speed control linkage bracket to upper intake manifold, if so equipped. Install accelerator and kickdown linkage to throttle body.
19. Connect the vacuum lines to their respective ports at rear of lower intake manifold.
20. Secure distributor cap to distributor. Connect distributor to spark plug wires to spark plugs. Connect high tension lead to ignition coil.
21. Fill and bleed the cooling system. Refer to Section 03-03.
22. NOTE: When the battery (10655) has been disconnected and reconnected, some abnormal drive symptoms may occur while the powertrain control module (PCM)(12A650) relearns its adaptive strategy. The vehicle may need to be driven 16 km (10 miles) or more to relearn the strategy.

    Connect the battery ground cable.
23. Perform all fuel charging system post-service procedures. Refer to Section 03-04B.
24. Start engine. Check and adjust ignition timing, if necessary.
25. Operate engine at fast idle and check for coolant leaks. Check coolant level and refill as necessary.
26. Start the engine and allow it to reach normal operating temperature. Then, while hot, tighten the lower intake manifold attaching nuts and bolts to 30-47 N·m (22-35 lb-ft).
27. Install engine air cleaner and air cleaner outlet tube assembly.

Cylinder Heads

Removal

1. Disconnect battery ground cable (14301). Drain cooling system.
2. Remove upper intake manifold (9424) and lower intake manifold as an assembly. Refer to Intake Manifold, Upper, and Intake Manifold, Lower, in the In-Vehicle Service portion of this section.
3. Disconnect muffler inlet pipe at left exhaust manifold (9431) and right exhaust manifold (9430).
4. Remove drive belts (8620). Refer to Section 03-05.
5. Remove secondary air injection pump (AIR pump)(9A486) and generator (GEN)(10300).
6. Remove the generator mounting bracket (10153) from the right cylinder head (6049).
7. If so equipped, discharge the air conditioning system into an approved refrigerant recovery system. Refer to Section 12-00 in the Body, Chassis Manual. Follow all safety precautions. Remove hose assembly from rear of A/C compressor (19703). Remove bolts attaching A/C compressor to A/C compressor mounting bracket (2882).
8. Remove nut attaching A/C compressor mounting bracket to water pump (8501). Remove bolts attaching A/C compressor mounting bracket to front of cylinder head. Swing A/C compressor mounting bracket out of the way with power steering pump (3A674) still attached.
9. Remove valve cover (6582). Remove rocker arm seat bolts, rocker arms (6564), rocker arm seats (6A528) and push rods (6565) in sequence so they can be installed in their original positions.
10. **CAUTION: If necessary to loosen head gasket seal, pry at forward corners of cylinder heads against casting bosses provided on cylinder blocks (6010). Do not damage machined surfaces of cylinder head or cylinder blocks.**

    Remove cylinder head attaching bolts. Lift cylinder heads and left exhaust manifold or right exhaust manifold as assemblies from cylinder blocks with a hoist or other suitable lifting device. Discard head gasket (6051).
11. If disassembly or machining of cylinder head is required, remove left or right exhaust manifold.

Official Licensed Product Ford Motor Company

IN-VEHICLE SERVICE (Continued)

Installation

1. Clean cylinder head, intake manifold, valve cover, and cylinder block sealing surfaces.
2. If cylinder head was removed for head gasket replacement, check flatness of cylinder head and cylinder block gasket surfaces for flatness. Refer to Section 03-00.
3. If left or right exhaust manifold was removed, coat cylinder head and exhaust manifold port areas with film of Premium Long-Life Grease XG-1-C or -K or equivalent meeting Ford specification ESA-M1C75-B and install left or right exhaust manifold to cylinder head.
4. Place two long cylinder head attaching bolts in two rear lower bolt holes of left cylinder head. Place a long cylinder head attaching bolt in rear lower bolt hole of right cylinder head. Use rubber bands to retain bolts in position, above head-to-block mating surface, until cylinder heads are installed.
5. Position new head gaskets on cylinder blocks over cylinder head to block dowels (6A008). Do not apply sealer to head gasket surfaces.
6. Place cylinder heads on cylinder blocks, guiding exhaust manifold studs into muffler inlet pipe connections.
7. Install remaining attaching bolts (longer bolts in lower row of bolt holes). Tighten all cylinder head attaching bolts in sequence shown in three steps: first to 95-108 N·m (70-80 lb-ft), then to 136-149 N·m (100-110 lb-ft), and finally to 176-189 N·m (130-140 lb-ft). When this procedure is used, it is not necessary to tighten bolts after extended operation.

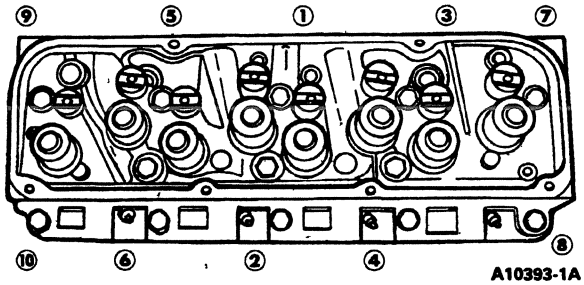

A10393-1A

8. Clean and inspect push rods, one at a time. Clean the oil passage in the push rods with a suitable solvent, and blow out with compressed air.
9. Install push rods in original positions. Apply Ford Multi-Purpose Grease DOAZ-19584-AA or equivalent meeting Ford specifications ESB-M1C93-B and ESB-M1C93-B to valve stem tips and push rod ends.
10. Lubricate and install the rocker arms. Refer to Rocker Arm in the In-Vehicle Service portion of this section. Make sure lower ends of push rods remain seated in valve tappets.
11. Tighten muffler inlet pipe stud nuts to 34-49 N·m (25-36 lb-ft).
12. Install upper and lower intake manifold assembly. Refer to Intake Manifold, Upper and Intake Manifold, Lower, in the In-Vehicle Service portion of this section.
13. Check valve clearance. Refer to Valve Clearance in the Adjustments portion of this section.
14. Install valve covers and retaining bolts. Tighten bolts to 12-15 N·m (9-11 lb-ft).
15. Install A/C compressor mounting bracket, with power steering pump in place, to left cylinder head and water pump. Tighten bolts to 54-71 N·m (40-53 lb-ft) and nut to 41-54 N·m (30-40 lb-ft). If equipped with air conditioning, attach A/C compressor to A/C compressor mounting bracket. Tighten compressor mounting bolts to 24-31 N·m (18-23 lb-ft). Connect service valves and hoses to A/C compressor.
16. Install generator mounting bracket to right cylinder head.
17. Install generator and secondary air injection pump to A/C compressor mounting bracket. Refer to Specifications in this section for bolt torques.
18. Install drive belts. Refer to Section 03-05.
19. Fill and bleed cooling system. Refer to Section 03-03.
20. NOTE: When the battery (10655) has been disconnected and reconnected, some abnormal drive symptoms may occur while the powertrain control module (PCM)(12A650) relearns its adaptive strategy. The vehicle may need to be driven 16 km (10 miles) or more to relearn the strategy.

    Connect battery ground cable.
21. Start engine (6007) and check for leaks.
22. If equipped with air conditioning, evacuate A/C compressor and partially charge system with refrigerant. Refer to Section 12-00 in the Body, Chassis Manual.

Ford Motor Company Licensed Product

IN-VEHICLE SERVICE (Continued)

A/C Compressor Mounting Bracket

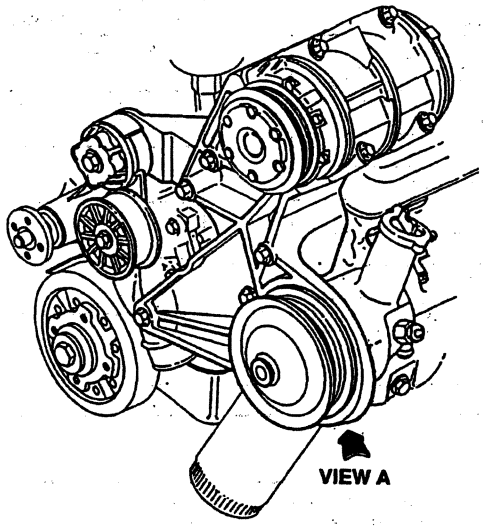

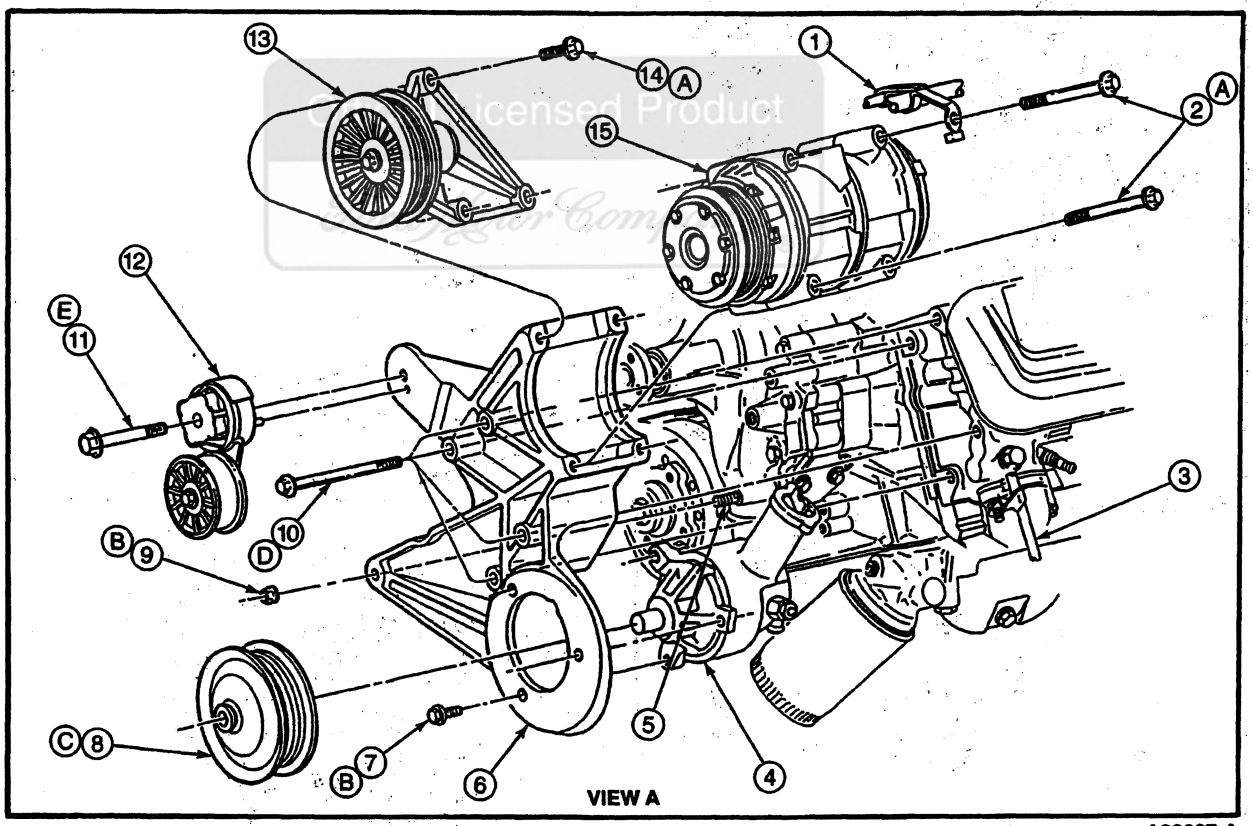

A23627-A

Item	Part Number	Description
1	19B890	Air Conditioning Hose Assy
2	N806020-S2	Bolt, M8-1.25 x 123
3	6754	Oil Level Indicator Tube

(Continued)

Item	Part Number	Description
4	3A674	Power Steering Pump
5	388112	Stud
6	2882	A/C Compressor Mounting Bracket

(Continued)

IN-VEHICLE SERVICE (Continued)

Item	Part Number	Description
7	N800199-S8M	Screw, M10-1.5 x 33
8	3A733	Power Steering Pump Pulley
9	382802-S2	Nut, 3/8-16
10	391319-S2	Bolt, 7/16-14 x 5.25
11	56192-S2	Bolt, 1/2-13 x 3.75
12	6B209	Drive Belt Tensioner
13	8678	Belt Idler Pulley
14	N605790-S2	Bolt, M8-1.25 x 40
15	19703	A/C Compressor

(Continued)

Item	Part Number	Description
A	—	Tighten to 24-31 N·m (18-23 Lb-Ft)
B	—	Tighten to 41-54 N·m (30-40 Lb-Ft)
C	—	Press Flush ± 0.254 mm (0.010 Inch)
D	—	Tighten to 54-71 N·m (40-53 Lb-Ft)
E	—	Tighten to 68-92 N·m (50-68 Lb-Ft)

Accessory Bracket, Right

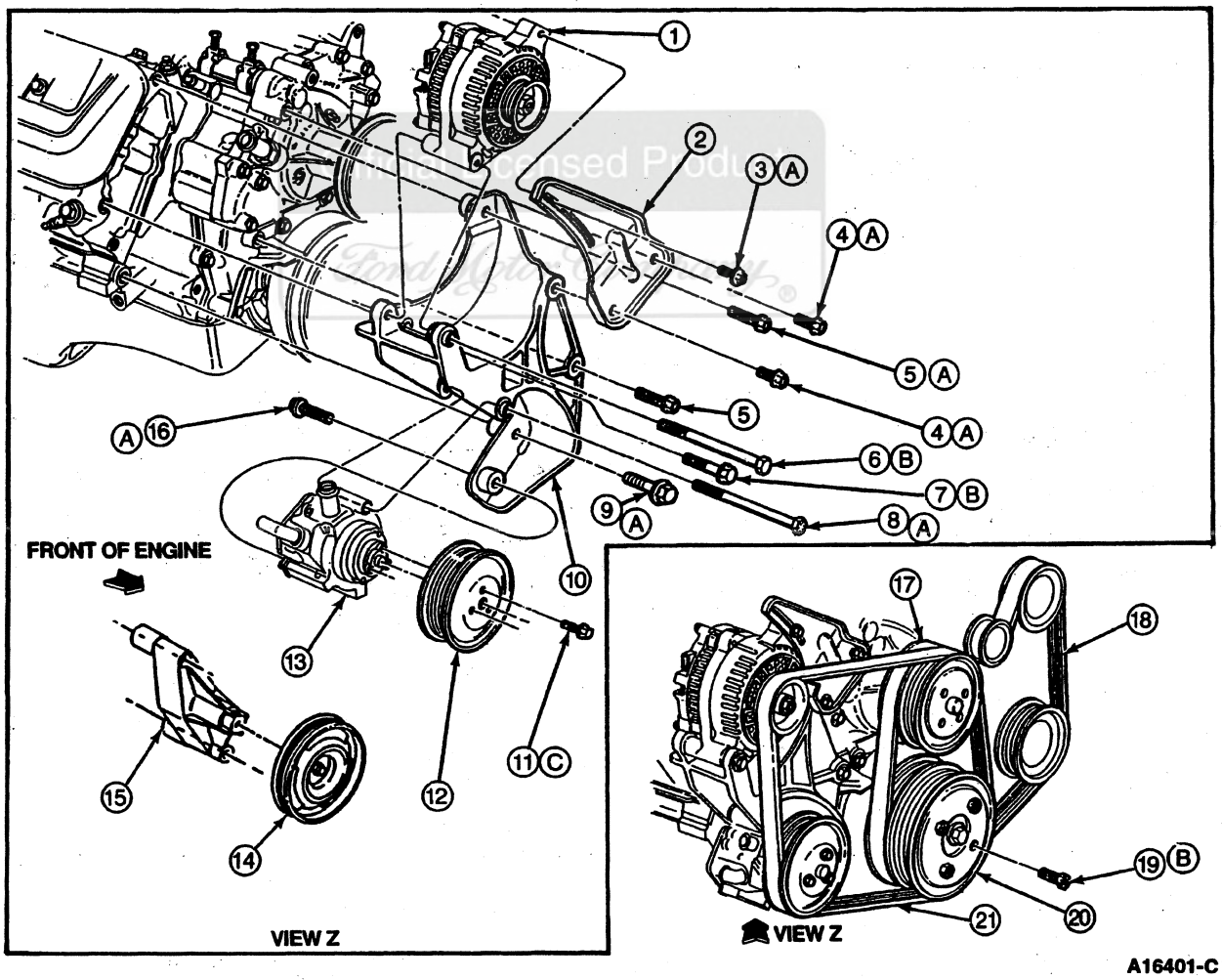

IN-VEHICLE SERVICE (Continued)

Item	Part Number	Description
1	10300	Generator
2	10145	Generator Adjusting Arm
3	390785-S36	Screw, 3/8-16 x 1.25 — Used with Small Frame Generator
4	56540-S36	Bolt, 3/8-16 x 1.0
5	56542-S2	Bolt, 3/8-16 x 1.5
6	391319-S2	Bolt, 7/16-14 x 5.50
7	56564-S2	Bolt, 7/16-14 x 2.0
8	391314-S2	Bolt, 3/8-16 x 5.25
9	56544-S36	Bolt, 3/8-16 x 2.0
10	10153	Generator Mounting Bracket
11	N802493-S2	Screw and Washer, M6-1.0 x 16
12	9B447	Secondary Air Injection Pump Pulley
13	9A486	Secondary Air Injection Pump
14	19A216	Idler Assy (California, Only)
15	8A620	Idler Support Bracket (California Only)
16	56543-S36	Bolt, 3/8-16 x 1.75
17	8509	Water Pump Pulley
18	8620	Drive Belt, 6k x 67.5 w/o A/C and 6k x 68.6 with A/C
19	42998-S36	Bolt, 3/8-16 x 1.0
20	6312	Crankshaft Pulley
21	8620	Drive Belt, 6k x 49.5 — Small and Medium Frame Generator 6k x 50.5 — Large Frame Alternator
A	—	Tighten to 41-54 N·m (30-40 Lb-Ft)
B	—	Tighten to 54-71 N·m (40-53 Lb-Ft)
C	—	Tighten to 12-15 N·m (9-11 Lb-Ft)

(Continued)

Official Licensed Product Ford Motor Company

Crankshaft Pulley/Damper/Crankshaft Front Seal

Replacement of the crankshaft front seal (6700) is recommended whenever the engine front cover (6019) is removed.

SPECIAL SERVICE TOOL(S) REQUIRED

Description	Tool Number
Crankshaft Damper Remover	T58P-6316-D
Front Cover Seal Remover	T70P-6B070-B
Crankshaft Seal Replacer/Cover Aligner	T88T-6701-A
Crankshaft Damper and Sprocket Replacer	T52L-6306-AEE

Removal

1. Remove the bolts attaching the fan shroud (8146) to the radiator (8005).
2. Remove the fan bolts from the water pump hub. Remove the fan blade (8600), fan clutch (8A616) and fan shroud.
3. Remove the drive belts (8620). Refer to Section 03-05.
4. Remove the crankshaft pulley (6312) from the crankshaft vibration damper (6316). Remove the damper attaching bolt and washer. Remove crankshaft vibration damper using Crankshaft Damper Remover T58P-6316-D.
5. Remove front Woodruff key and slide crankshaft damper spacer off crankshaft (6303).
6. Place the Front Cover Seal Remover T70P-6B070-B onto the engine front cover over the crankshaft front seal. Tighten the two through-bolts to force the seal puller under the seal flange.
7. Alternately tighten the four puller bolts one-half turn at a time. Pull the crankshaft front seal from the engine front cover.

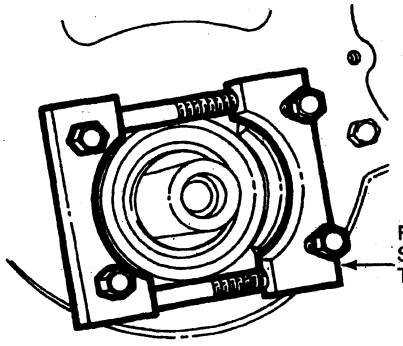

A5765-C

IN-VEHICLE SERVICE (Continued)

Installation

1. Coat a new crankshaft front seal with Ford Multi-Purpose Grease DOAZ-19584-AA or equivalent meeting Ford specification ESB-M1C93-B and place it onto the Crankshaft Seal Replacer / Cover Aligner T88T-6701-A. Place the sleeve and crankshaft front seal onto the end of the crankshaft and push it toward the engine (6007) until the crankshaft front seal starts into the engine front cover.

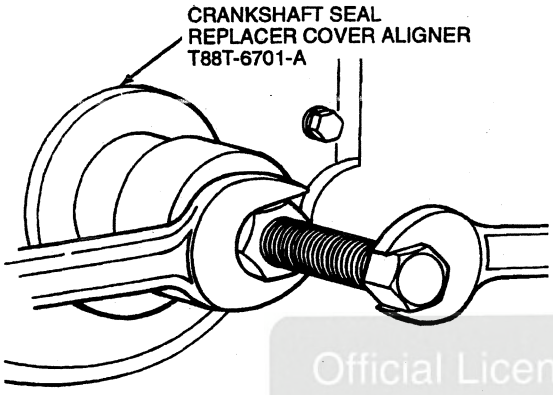

A10352-E

2. Place the installation screw, washer, and nut onto the end of the crankshaft. Thread the screw into the crankshaft. Tighten the nut against the washer and installation sleeve to force the crankshaft front seal into the engine front cover. Remove the installation tool from the crankshaft.
3. Install crankshaft damper spacer on the inner Woodruff key. Apply Gasket Maker E2AZ-19562-B or equivalent meeting Ford specification WSK-M2G348-A5 to the front of the key on the crankshaft, and in the keyway inside the crankshaft damper spacer, after installing spacer. Install Woodruff key for crankshaft vibration damper.
4. Apply Ford Multi-Purpose Grease DOAZ-19584-AA or equivalent meeting Ford specification ESB-M1C93-B to the front seal rubbing surface of the crankshaft vibration damper inner hub to prevent damage to the crankshaft front seal. Apply Ford Multi-Purpose Grease DOAZ-19584-AA or equivalent meeting Ford specification ESB-M1C93-B to the front of the crankshaft for crankshaft vibration damper installation.
5. Line up the crankshaft vibration damper keyway with the key on the crankshaft. Install the crankshaft vibration damper on crankshaft using Crankshaft Damper and Sprocket Replacer T52L-6306-AEE. Install the bolt and washer. Tighten the bolt to 95-122 N·m (70-90 lb-ft). Install the crankshaft pulley.
6. Install the drive belts. Refer to Section 03-05.
7. Position the fan shroud over the water pump pulley (8509). Install the fan blade. Install the fan shroud attaching screws.

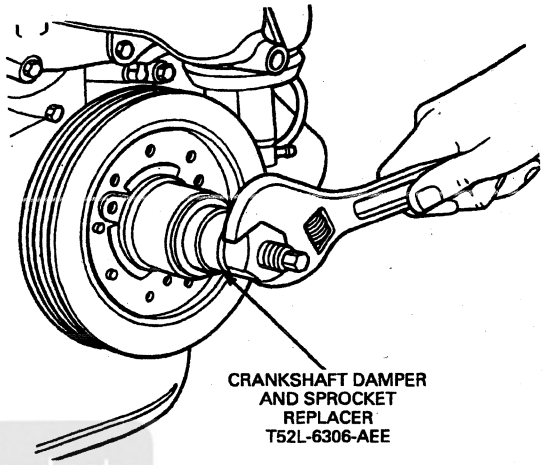

A10077-B

Official Licensed Product

Water Pump

Removal

1. Drain cooling system. Refer to Section 03-03.
2. Remove drive belts (8620). Refer to Section 03-05.
3. Remove bolts attaching fan shroud (8146) to radiator (8005).
4. Remove fan blade (8600) from fan clutch (8A616) and remove fan shroud.
5. Remove fan clutch and water pump pulley (8509) from water pump (8501).
6. Remove four bolts and one nut attaching A/C compressor mounting bracket (2882) to cylinder head (6049) and water pump. Do not remove A/C compressor (19703) or power steering pump (3A674) from A/C compressor mounting bracket.
7. Pull A/C compressor mounting bracket forward to remove from stud on water pump.
8. Remove bolt attaching generator adjusting arm (10145) to water pump. Remove four bolts attaching generator mounting bracket (10153) to cylinder head, cylinder blocks (6010) and water pump.

IN-VEHICLE SERVICE (Continued)

9. Remove remaining water pump attaching bolts and remove water pump from engine front cover (6019). Remove water pump cover (8508) from water pump. Discard water pump housing gasket (8507) and water pump cover gasket (8513).

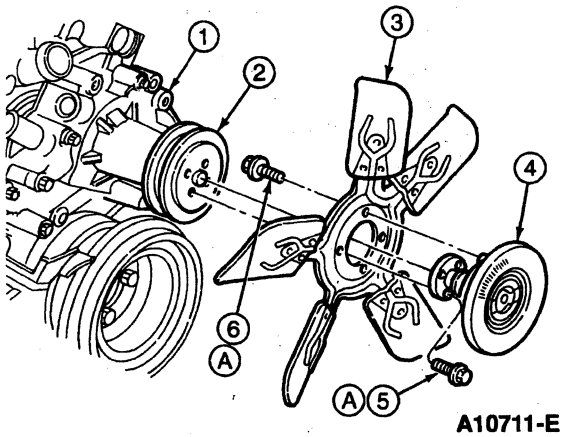

A10711-E

Item	Part Number	Description
1	8501	Water Pump
2	8509	Water Pump Pulley
3	8600	Fan Blade
4	8A616	Fan Clutch
5	380288-S2	Screw and Washer Assy
6	57632-S2	Screw and Washer Assy
A	—	Tighten to 16-24 N·m (12-18 Lb-Ft)

Installation

1. Remove any gasket material from water pump, cylinder front cover and separator plate mating surfaces.
2. Position new water pump housing gasket and water pump cover gasket coated on both sides with Perfect Seal Sealing Compound B5A-19554-A or equivalent water-resistant sealer meeting Ford specification ESE-M4G115-A.
3. Position water pump and water pump cover onto engine front cover. Install bolts and tighten to 16-24 N·m (12-18 lb-ft).
4. Install generator mounting bracket to cylinder head, cylinder blocks and water pump with four attaching bolts. Install generator adjusting arm to water pump with one attaching bolt. Tighten 7/16-inch bolts to 54-71 N·m (40-53 lb-ft) and 3/8-inch bolts to 41-54 N·m (30-40 lb-ft).
5. Position A/C compressor mounting bracket over water pump stud and secure to cylinder head with four bolts tightened to 54-71 N·m (40-53 lb-ft) and secure nut to water pump to 41-54 N·m (30-40 lb-ft).
6. Install water pump pulley and fan clutch to water pump hub with four bolts. Install fan blade to fan clutch with four bolts. Tighten water pump pulley, fan clutch hub bolts, and fan-to-fan clutch hub bolts to 16-24 N·m (12-18 lb-ft). Install fan shroud.
7. Install drive belts. Refer to Section 03-05.
8. Fill and bleed the cooling system. Refer to Section 03-03.
9. Start the engine (6007) and check for leaks.

Engine Front Cover

SPECIAL SERVICE TOOL(S) REQUIRED

Description	Tool Number
Crankshaft Damper Remover	T58P-6316-D
Front Cover Aligner	T68P-6019-A
Crankshaft Damper and Sprocket Replacer	T52L-6306-AEE

Removal

Crankshaft front seal replacement is recommended whenever the engine front cover (6019) has been removed.

1. Disconnect battery ground cable (14301). Drain crankcase.
2. Drain cooling system. Refer to Section 03-03.
3. Remove drive belts (8620). Refer to Section 03-05.
4. Remove bolts attaching fan shroud (8146) to radiator (8005).
5. Remove fan blade (8600) from fan clutch (8A616) and remove fan shroud.
6. Remove fan clutch and water pump pulley (8509) from water pump (8501).
7. Disconnect upper radiator hose (8260) and lower radiator hose (8286) at engine (6007). Disconnect transmission oil cooler lines at radiator.
8. Remove upper radiator support bracket and remove radiator.
9. Remove generator pivot and attaching bolts. Remove generator (GEN)(10300) from generator mounting bracket (10153) and generator adjusting arm (10145).
10. Remove two bolts attaching generator adjusting arm to water pump and generator mounting bracket and remove generator adjusting arm.
11. Remove air pump pivot and attaching bolts. Remove secondary air injection pump (AIR pump)(9A486) from generator mounting bracket.
12. Remove four bolts attaching generator mounting bracket to cylinder head (6049), cylinder blocks (6010) and water pump, and remove generator mounting bracket.

IN-VEHICLE SERVICE (Continued)

13. Remove power steering pump pulley (3A733) from power steering pump (3A674).
14. Remove power steering lines from power steering pump. Remove four bolts attaching power steering pump to A/C compressor mounting bracket (2882) and remove power steering pump from A/C compressor mounting bracket.
15. Remove four bolts attaching A/C compressor (19703) to A/C compressor mounting bracket. Remove four bolts and one nut attaching A/C compressor mounting bracket to cylinder head and water pump. Remove A/C compressor mounting bracket from engine.
16. Remove the crankshaft pulley (6312) from the crankshaft vibration damper (6316).
17. Remove bolt and washer attaching crankshaft vibration damper. Remove crankshaft vibration damper using Crankshaft Damper Remover T58P-6316-D or Rotunda Gear and Pulley Puller 014-00293 or equivalent. Remove Woodruff key and crankshaft damper spacer from crankshaft (6303).

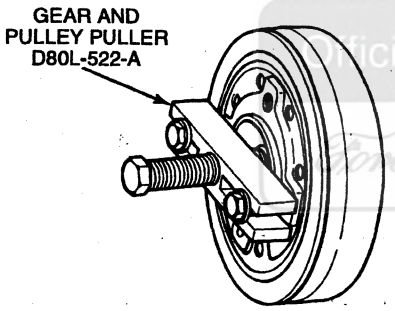

DA0971-A

18. Loosen water bypass tube (8548) at water pump. Disconnect heater return hose at water pump.
19. NOTE: If the original gasket was not damaged from front cover removal, it may be reused. If damage is evident, the oil pan gasket (6710) must be replaced in its entirety.

    Remove bolts attaching engine front cover to cylinder blocks. Remove engine front cover and water pump as an assembly. Discard engine front cover gasket (6020) and oil pan gasket.

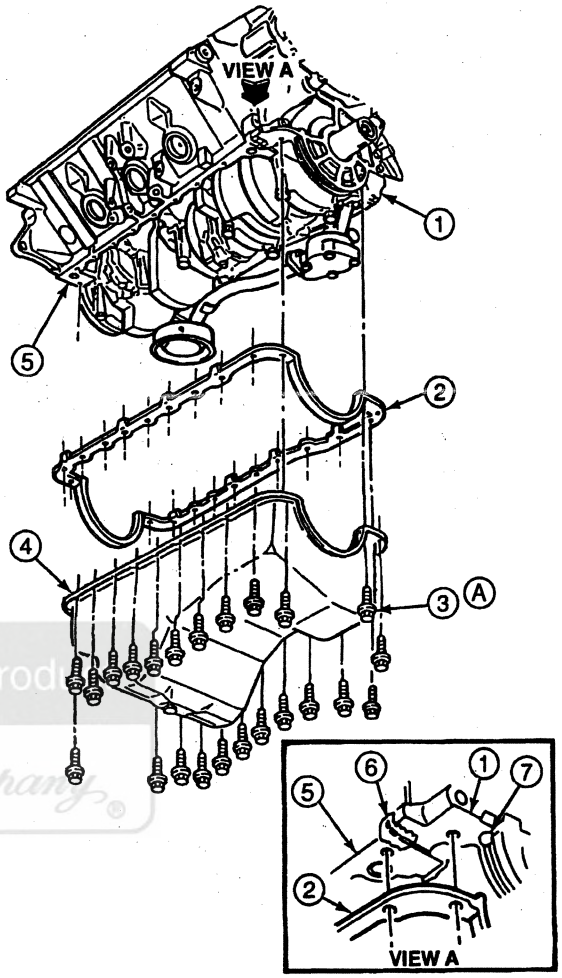

A23628-A

Item	Part Number	Description
1	6019	Engine Front Cover
2	6710	Oil Pan Gasket
3	391496-S2	Bolt
4	6675	Oil Pan
5	6010	Cylinder Blocks
6	E2AZ-19562-B	Gasket Maker (2 Places)
7	E2AZ-19562-B	Gasket Maker (4 Places)
A	—	Tighten to 11-16 N·m (8-12 Lb-Ft)

20. If new engine front cover is to be installed, remove water pump and install it and a new water pump housing gasket (8507) on the new engine front cover.
21. Check timing chain deflection. Refer to Section 03-00.

Official Licensed Product
Ford Motor Company

IN-VEHICLE SERVICE (Continued)

Installation

1. Replace crankshaft front seal (6700). Refer to Crankshaft Pulley / Damper / Crankshaft Front Seal in the In-Vehicle Service portion of this section.
2. Clean sealing surfaces of engine front cover and cylinder blocks. Also, clean oil pan gasket sealing surfaces of any oil or debris.
3. Coat the gasket surfaces of the cylinder blocks and engine front cover with Perfect Seal Sealing Compound F2AZ-19554-AA or equivalent oil resistant sealer meeting Ford specification ESE-M4G115-A and position a new engine front cover gasket on the cylinder blocks.
4. Apply Gasket Maker E2AZ-19562-B or equivalent meeting Ford specification WSK-M2G348-A5 along the cylinder block pan gasket junction where the engine front cover contacts the oil pan gasket.
5. Position the engine front cover onto the cylinder blocks. Use care when installing the engine front cover to avoid seal damage or possible mislocation.
6. Install Front Cover Aligner T68P-6019-A into proper position. It may be necessary to force the engine front cover downward to compress the oil pan gasket slightly. This operation can be facilitated by using a suitable tool at the attaching bolt hole locations.

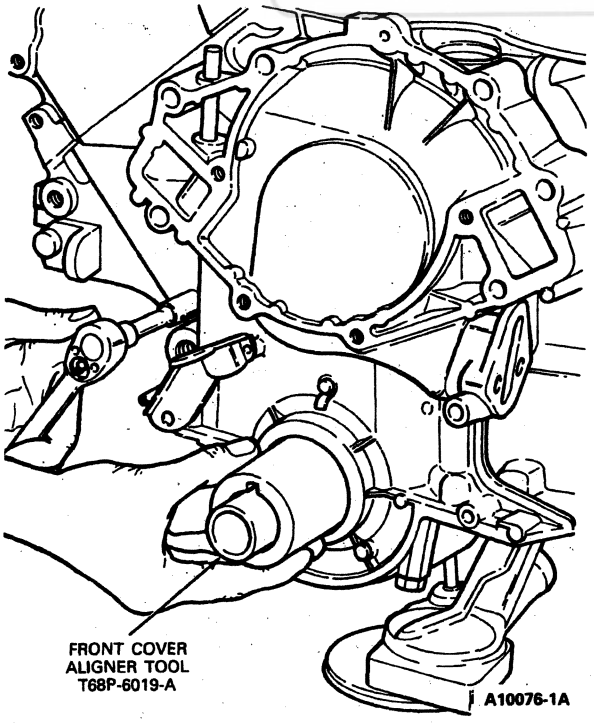

7. Coat the threads of the attaching bolts with Pipe Sealant with Teflon® D8AZ-19554-A or equivalent oil-resistant sealer meeting Ford specification WSK-M2G350-A2 and install the screws.
8. While pushing in on Front Cover Aligner T68P-6019-A, tighten the oil pan-to-engine front cover attaching bolts to 8-12 N·m (71-106 lb-in). Remove alignment tool. Tighten the engine front cover-to-cylinder blocks attaching screws to 16-24 N·m (12-18 lb-ft).
9. Apply Ford Multi-Purpose Grease DOAZ-19584-AA or equivalent meeting Ford specification ESB-M1C93-B to front of crankshaft for crankshaft vibration damper installation.
10. Install crankshaft damper hub (6359) on the inner Woodruff key.
11. Apply Gasket Maker E2AZ-19562-B or equivalent meeting Ford specification WSK-M2G348-A5 to the front of the key on the crankshaft, and in the keyway inside the crankshaft damper spacer, after installing spacer.
12. Position crankshaft damper Woodruff key and install crankshaft vibration damper using Crankshaft Damper and Sprocket Replacer T52L-6306-AEE. Install crankshaft vibration damper attaching bolt and washer. Tighten to 95-122 N·m (70-90 lb-ft).

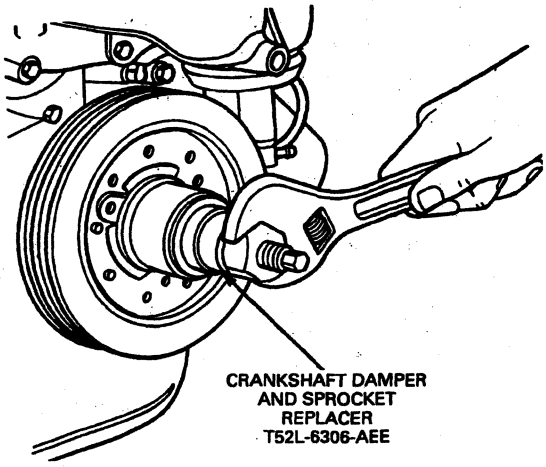

13. Install crankshaft pulley to crankshaft vibration damper. Tighten four bolts to 54-71 N·m (40-53 lb-ft).
14. Install A / C compressor mounting bracket to cylinder head using four bolts. Tighten to 54-71 N·m (40-53 lb-ft). Tighten nut to water pump stud to 41-54 N·m (30-40 lb-ft).

IN-VEHICLE SERVICE (Continued)

15. Attach A/C compressor to A/C compressor mounting bracket with four bolts and tighten to 24-31 N·m (18-23 lb-ft).
16. Attach power steering pump lines to power steering pump. Press power steering pump pulley onto power steering pump. Make sure front surface of pulley hub is flush with end of pump shaft.
17. Attach generator mounting bracket to cylinder head, cylinder blocks and water pump with four bolts. Tighten 3/8-inch bolts to 41-54 N·m (30-40 lb-ft) and 7/16-inch bolts to 54-71 N·m (40-53 lb-ft).
18. Install secondary air injection pump to generator mounting bracket with two bolts. Tighten to 41-54 N·m (30-40 lb-ft). Install secondary air injection pump pulley. Tighten screws to 12-15 N·m (9-11 lb-ft).
19. Install generator adjusting arm to generator mounting bracket and water pump with two bolts. Tighten to 41-54 N·m (30-40 lb-ft).
20. Install generator to generator mounting bracket using two bolts. Do not tighten bolts until drive belt has been tensioned.
21. Install drive belts and adjust drive belt tension to specifications. Refer to Section 03-05.
22. Position radiator to lower support. Position upper radiator support bracket to radiator, and install attaching bolts. Connect upper radiator hose and lower radiator hose at engine. Connect transmission oil cooler lines.
23. Place fan blade inside fan shroud and set in position in vehicle. Position the fan blade and fan clutch on the water pump pulley. Install and tighten the attaching bolts to 16-24 N·m (12-18 lb-ft). Install screws attaching fan shroud to radiator.
24. The crankcase oil should be drained and refilled with the proper grade and quantity of engine oil before starting the engine.
25. Install heater return hose to water pump. Fill and bleed the cooling system. Refer to Section 03-03.
26. NOTE: When the battery (10655) has been disconnected and reconnected, some abnormal drive symptoms may occur while the powertrain control module (PCM)(12A650) relearns its adaptive strategy. The vehicle may need to be driven 16 km (10 miles) or more to relearn the strategy.

    Connect battery ground cable.
27. Run engine at fast idle and check for coolant and oil leaks. Adjust ignition timing to specification listed on the Vehicle Emission Control Information (VECI) decal.

Timing Chain and Sprockets

SPECIAL SERVICE TOOL(S) REQUIRED

Description	Tool Number
Crankshaft Damper Remover	T58P-6316-D
Front Cover Aligner	T68P-6019-A
Crankshaft Damper and Sprocket Replacer	T52L-6306-AEE

Removal

1. NOTE: Crankshaft front seal replacement is recommended whenever the engine front cover (6019) has been removed.

   Disconnect battery ground cable (14301). Drain crankcase.
2. Drain cooling system. Refer to Section 03-03.
3. Remove drive belts (8620). Refer to Section 03-05.
4. Remove bolts attaching fan shroud (8146) to radiator (8005).
5. Remove fan blade (8600) from fan clutch (8A616) and remove fan shroud.
6. Remove fan clutch and water pump pulley (8509) from water pump (8501).
7. Disconnect upper radiator hose (8260) and lower radiator hose (8286) at engine (6007). Disconnect transmission oil cooler lines at radiator.
8. Remove upper radiator support bracket and remove radiator.
9. Remove generator pivot and attaching bolts. Remove generator (GEN)(10300) from generator mounting bracket (10153) and generator adjusting arm (10145).
10. Remove two bolts attaching generator adjusting arm to water pump and generator mounting bracket . Remove generator adjusting arm.
11. Remove air pump pivot and attaching bolts. Remove secondary air injection pump (AIR pump)(9A486) from generator mounting bracket.
12. Remove four bolts attaching generator mounting bracket to cylinder head (6049), cylinder blocks (6010) and water pump. Remove generator mounting bracket.
13. Remove power steering pump pulley (3A733) from power steering pump (3A674).
14. Remove power steering lines from power steering pump. Remove four bolts attaching power steering pump to A/C compressor mounting bracket (2882). Remove power steering pump from A/C compressor mounting bracket.
15. Remove four bolts attaching A/C compressor (19703) to A/C compressor mounting bracket. Remove four bolts and one nut attaching A/C compressor mounting bracket to cylinder head and water pump. Remove A/C compressor mounting bracket from engine.

IN-VEHICLE SERVICE (Continued)

16. Remove the crankshaft pulley (6312) from the crankshaft vibration damper (6316).
17. Remove bolt and washer attaching crankshaft vibration damper. Remove crankshaft vibration damper using Crankshaft Damper Remover T58P-6316-D or Gear and Pulley Puller D80L-522-A or equivalent. Remove Woodruff key and crankshaft damper spacer from crankshaft (6303).

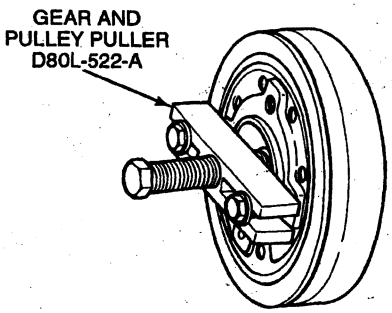

DA0971-A

18. Loosen water bypass tube (8548) at water pump. Disconnect heater return hose at water pump.
19. Remove bolts attaching engine front cover to cylinder blocks. Remove engine front cover and water pump as an assembly. Discard engine front cover gasket (6020) and oil pan gasket (6710). Using a thin-blade knife, cut the oil pan gasket flush with cylinder block face separating the engine front cover from the cylinder blocks.
20. If new engine front cover is to be installed, remove water pump and install it and a new water pump housing gasket (8507) on the new engine front cover.
21. Check timing chain deflection. Refer to Section 03-00.
22. If the timing chain, camshaft sprocket (6256) and crankshaft sprocket (6306) are to be removed, crank the engine until timing marks on camshaft sprocket and crankshaft sprocket are as shown.

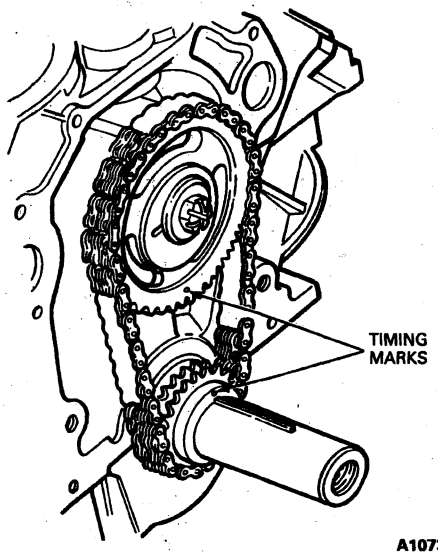

A10737-1A

23. Remove camshaft sprocket bolt and camshaft sprocket washer (6278). Discard camshaft sprocket bolt. Slide timing chain, camshaft sprocket and crankshaft sprocket forward, and remove as an assembly.

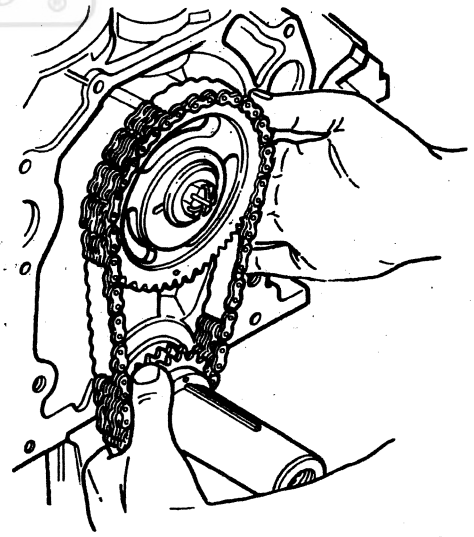

A10738-1A

24. Refer to Section 03-00 for cleaning and inspection procedures.

IN-VEHICLE SERVICE (Continued)

Installation

1. Assemble the timing chain, camshaft sprocket and crankshaft sprocket so sprocket timing marks align with each other as shown in the Removal portion of this procedure. Install the timing chain, camshaft sprocket and crankshaft sprocket as an assembly to crankshaft and camshaft (6250). If a new timing chain is to be installed, submerge timing chain in a container of recommended quality engine oil. Verify proper alignment of timing marks after installation.
2. Install new camshaft sprocket bolt and camshaft sprocket washer. Tighten bolt to 54-68 N·m (40-50 lb-ft). Lubricate timing chain with recommended quality engine oil.
3. Replace crankshaft front seal (6700). Refer to Crankshaft Pulley / Damper / Crankshaft Front Seal in the In-Vehicle Service portion of this section.
4. Clean sealing surfaces of engine front cover and cylinder blocks. Also, clean oil pan gasket sealing surfaces of any oil or debris.
5. Coat the gasket surfaces of the cylinder blocks and engine front cover with Perfect Seal Sealing Compound F2AZ-19554-AA or equivalent oil resistant sealer meeting Ford specification ESE-M4G115-A and position a new engine front cover gasket on the cylinder blocks.
6. Apply Gasket Maker E2AZ-19562-B or equivalent meeting Ford specification WSK-M2G348-A5 along the cylinder block pan gasket junction where the engine front cover contacts the oil pan gasket.
7. Position the engine front cover onto the cylinder blocks. Use care when installing the engine front cover to avoid seal damage or possible mislocation.
8. Install Front Cover Aligner T68P-6019-A into proper position. It may be necessary to force the engine front cover downward to compress the oil pan gasketslightly. This operation can be facilitated by using a suitable tool at the attaching bolt hole locations.

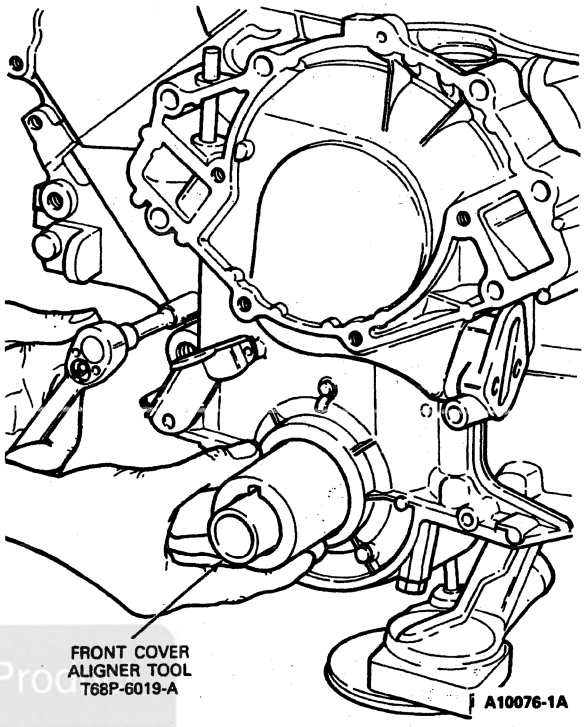

9. Coat the threads of the attaching bolts with Pipe Sealant with Teflon® D8AZ-19554-A or equivalent oil-resistant sealer meeting Ford specification WSK-M2G350-A2 and install the screws.
10. While pushing in on Front Cover Aligner T68P-6019-A, tighten the oil pan-to-engine front cover attaching bolts to 8-12 N·m (71-106 lb-in). Remove alignment tool. Tighten the engine front cover-to-cylinder blocks attaching screws to 16-24 N·m (12-18 lb-ft).
11. Apply Ford Multi-Purpose Grease DOAZ-19584-AA or equivalent meeting Ford specification ESB-M1C93-B to front of crankshaft for crankshaft vibration damper installation.
12. Install crankshaft damper hub (6359) on the inner Woodruff key.
13. Apply Gasket Maker E2AZ-19562-B or equivalent meeting Ford specification WSK-M2G348-A5 to the front of the key on the crankshaft, and in the keyway inside the crankshaft damper spacer, after installing spacer.

IN-VEHICLE SERVICE (Continued)

14. Position crankshaft damper Woodruff key and install crankshaft vibration damper using Crankshaft Damper and Sprocket Replacer T52L-6306-AEE. Install crankshaft vibration damper attaching bolt and washer. Tighten to 95-122 N·m (70-90 lb-ft).

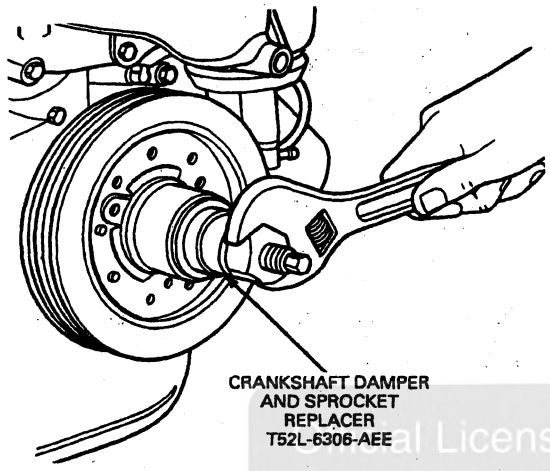

15. Install crankshaft pulley to crankshaft vibration damper. Tighten four bolts to 54-71 N·m (40-53 lb-ft).
16. Install A/C compressor mounting bracket to cylinder head using four bolts. Tighten to 54-71 N·m (40-53 lb-ft). Tighten nut to water pump stud to 41-54 N·m (30-40 lb-ft).
17. Attach A/C compressor to A/C compressor mounting bracket with four bolts and tighten to 24-31 N·m (18-23 lb-ft).
18. Attach power steering pump lines to power steering pump. Press power steering pump pulley onto power steering pump. Make sure front surface of pulley hub is flush with end of pump shaft.
19. Attach generator mounting bracket to cylinder head, cylinder blocks and water pump with four bolts. Tighten 3/8-inch bolts to 41-54 N·m (30-40 lb-ft) and 7/16-inch bolts to 54-71 N·m (40-53 lb-ft).
20. Install secondary air injection pump to generator mounting bracket with two bolts. Tighten to 41-54 N·m (30-40 lb-ft). Install secondary air injection pump pulley. Tighten screws to 12-15 N·m (9-11 lb-ft).
21. Install generator adjusting arm to generator mounting bracket and water pump with two bolts. Tighten to 41-54 N·m (30-40 lb-ft).
22. Install generator to generator mounting bracket using two bolts. Do not tighten bolts until drive belt has been tensioned.
23. Install drive belts and adjust drive belt tension to specifications. Refer to Section 03-05.
24. Position radiator to lower support. Position upper radiator support bracket to radiator, and install attaching bolts. Connect upper radiator hose and lower radiator hose at engine. Connect transmission oil cooler lines.
25. Place fan blade inside fan shroud and set in position in vehicle. Position the fan blade and fan clutch on the water pump pulley. Install and tighten the attaching bolts to 16-24 N·m (12-18 lb-ft). Install screws attaching fan shroud to radiator.
26. The crankcase oil should be drained and refilled with the proper grade and quantity of engine oil before starting the engine.
27. Install heater return hose to water pump. Fill and bleed the cooling system. Refer to Section 03-03.
28. NOTE: When the battery (10655) has been disconnected and reconnected, some abnormal drive symptoms may occur while the powertrain control module (PCM)(12A650) relearns its adaptive strategy. The vehicle may need to be driven 16 km (10 miles) or more to relearn the strategy.

    Connect battery ground cable.
29. Run engine at fast idle and check for coolant and oil leaks. Adjust ignition timing to specification listed on the vehicle emission control information (VECI) decal.

Camshaft

Removal

1. Drain radiator (8005) and remove. Refer to Section 03-03.

IN-VEHICLE SERVICE (Continued)

2. Remove engine front cover (6019), timing chain, camshaft sprocket (6256) and crankshaft sprocket (6306). Refer to Timing Chain and Sprockets in the In-Vehicle Service portion of this section. Check timing chain deflection before removal. Refer to Section 03-00.

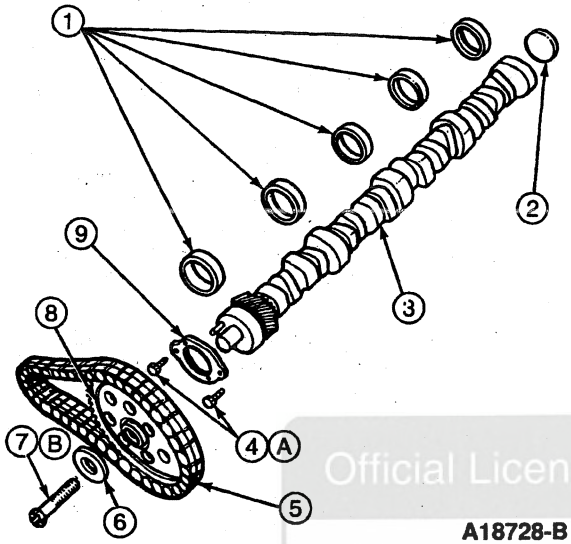

A18728-B

Item	Part Number	Description
1	6261	Camshaft Bearing
2	6266	Camshaft Rear Bearing Cover
3	6250	Camshaft
4	42910	Bolt, 1/4-20 x 1/2, Self-Locking
5	6268	Timing Chain
6	6278	Camshaft Sprocket Washer
7	43001	Bolt, 3/8-16 x 1.38
8	6256	Camshaft Sprocket
9	6269	Camshaft Thrust Plate
A	—	Tighten to 11-15 N·m (8-11 Lb-Ft)
B	—	Tighten to 54-68 N·m (40-50 Lb-Ft)

3. Remove the upper and lower intake manifolds (9424). Refer to Intake Manifold, Upper, and Intake Manifold, Lower in the In-Vehicle Service portion of this section.
4. Remove distributor. Refer to Section 03-07A.
5. Remove valve covers (6582). Back off all rocker arm seat bolts, turn rocker arms (6564) sideways, and remove the push rods (6565) keeping them in sequence.

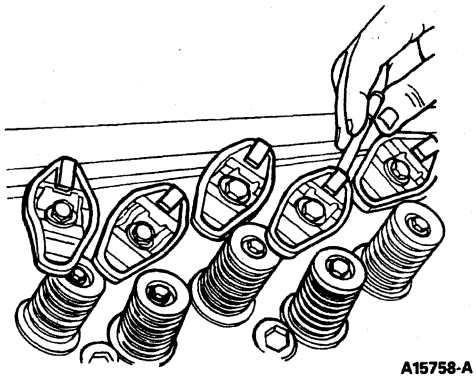

A15758-A

6. Remove the valve tappets (6500) with a magnet and place them in a rack in sequence. Rotate the valve tappets back and forth to loosen them from gum or varnish deposits.
7. Remove the bolts attaching the A/C condenser core (19712) to the chassis, if so equipped. Carefully rest the condenser on the left fender. Secure it in this position.
8. Remove the radiator inner grille (8150).
9. **CAUTION: Do not nick the camshaft bearings (6261) with the camshaft lobes.**

   Remove the camshaft thrust plate attaching bolts, and carefully remove the camshaft (6250) from the front of engine (6007).
10. Refer to Section 03-00 for cleaning and inspection procedures, and service as required.

Installation

1. Oil the camshaft journals and apply Ford Multi-Purpose Grease DOAZ-19584-AA or equivalent meeting Ford specification ESB-M1C93-B to the camshaft lobes. Carefully slide camshaft into position. Avoid nicking the camshaft bearings with the camshaft lobes.
2. Install camshaft thrust plate (6269). Tighten bolts to 11-15 N·m (8-11 lb-ft). Check camshaft end play following procedure in Section 03-00. If end play is excessive, replace the camshaft thrust plate.
3. Install timing chain, camshaft sprocket, crankshaft sprocket, new bolt, camshaft sprocket washer (6278) and engine front cover. Refer to Timing Chain and Sprockets in the In-Vehicle Service portion of this section.
4. Position the radiator in the vehicle and install the upper radiator support bracket to secure radiator. Connect the lower radiator hose (8286) and upper radiator hose (8260).
5. Install the radiator inner grille.
6. Install A/C condenser core.

Official Licensed Product Ford Motor Company

IN-VEHICLE SERVICE (Continued)

7. Clean the valve tappets externally. Lubricate the valve tappets and valve tappet bores with specified engine oil before installing them. Lubricate the push rod ends with Ford Multi-Purpose Grease DOAZ-19584-AA or equivalent meeting Ford specification ESR-M1C159-B. Install the valve tappets and push rods in their original positions.
8. Install upper and lower intake manifolds. Refer to Intake Manifold, Upper, and Intake Manifold, Lower, in the In-Vehicle Service portion of this section.
9. Rotate the crankshaft vibration damper (6316) until No. 1 piston (6108) is at TDC at the end of compression stroke. Install the distributor (12127) following the procedure in Section 03-07A.
10. Apply Ford Multi-Purpose Grease DOAZ-19584-AA or equivalent meeting Ford specification ESB-M1C93-B to valve stem tips. Position rocker arms over push rods and tighten bolts. Refer to Rocker Arm in the In-Vehicle Service portion of this section. Adjust valve clearance if necessary. Refer to Adjustments in this section.
11. Clean the valve covers and cylinder head sealing surfaces. Position new valve cover gasket (6584), if required, in cover seal groove. Make sure the valve cover gasket tang is secured in the notch of the valve cover.
12. Position valve cover on the cylinder head (6049) and tighten the four valve cover bolt and washer assemblies to 12-15 N·m (9-11 lb-ft), starting at the rearmost bolt and working forward.
13. Connect heater hose at intake manifold and at water pump (8501).
14. Install the accelerator linkage. Install the speed control linkage, if so equipped.
15. Connect engine vacuum lines to their original outlets on the fittings of the upper and lower intake manifolds.
16. Connect positive crankcase ventilation valve (PCV valve)(6A666) and crankcase vent connector and hose (6C324) to right valve cover.
17. Install the distributor cap (12106) and connect the ignition coil (12029) and distributor to spark plug wires (12286).
18. Install water pump pulley (8509) and fan clutch (8A616) to water pump hub with four bolts. Install fan blade (8600) to fan clutch with four bolts. Tighten water pump pulley, fan clutch hub bolts, and fan-to-fan clutch hub bolts to 16-24 N·m (12-18 lb-ft). Install fan shroud (8146). Install drive belt (8620) according to instructions on decal on upper radiator support bracket.
19. Fill and bleed the cooling system. Refer to Section 03-03. Fill and bleed power steering reservoir. Refer to Section 11-00 in the Body, Chassis Manual. Run engine at fast idle and check for leaks.
20. Adjust the ignition timing to specifications listed on the engine decal.
21. Adjust transmission linkage, if necessary. Refer to Section 07-01. Install the engine air cleaner (ACL)(9600) and air cleaner outlet tube (9B659).

Exhaust Manifolds

SPECIAL SERVICE TOOL(S) REQUIRED

Description	Tool Number
Spark Plug Wire Remover	T74P-6666-A

Right-Hand

Removal

1. Remove spark plug heat shield (12A406).
2. Remove distributor to spark plug wires (12286) using Spark Plug Wire Remover T74P-6666-A.

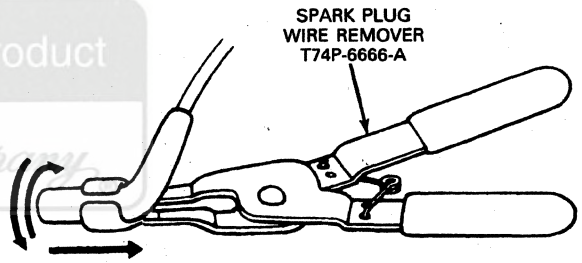

3. Disconnect muffler inlet pipe.
4. If equipped with secondary air injection, disconnect the secondary air injection check valve tube (9B480).
5. Remove attaching bolts and right exhaust manifold (9430).
6. Inspect joint faces for signs of exhaust leaks, cracks or any defect that would make exhaust manifold unfit for use.

Left-Hand

Removal

1. Remove oil level indicator tube (6754).
2. Remove spark plug heat shield.
3. Remove distributor to spark plug wires using Spark Plug Wire Remover T74P-6666-A.
4. Disconnect EGR valve to exhaust manifold tube (9D477). If equipped with air injection, disconnect the secondary air injection check valve tube.
5. Disconnect muffler inlet pipe.
6. Remove attaching bolts and exhaust manifold (9431).

IN-VEHICLE SERVICE (Continued)

7. Inspect joint faces for signs of exhaust leaks, cracks or any defect that would make the exhaust manifold unfit for use.

Installation

1. Clean mating surfaces of right exhaust manifold or left exhaust manifold and cylinder head (6049). Clean mounting flange of right exhaust manifold or left exhaust manifold and inlet pipe(s). Clean mounting surface for air injection tube or right exhaust manifold. Apply light film of Premium Long-Life Grease XG-1-C or -K or equivalent meeting Ford specification ESA-M1C75-B to right exhaust manifold or left exhaust manifold.
2. Position right exhaust manifold or left exhaust manifold on cylinder head. Install attaching bolts and washers, starting at fourth bolt hole from front of each right exhaust manifold or left exhaust manifold. Tighten bolts to 34-47 N·m (25-35 lb-ft), working from center right to both ends.

Exhaust Manifold

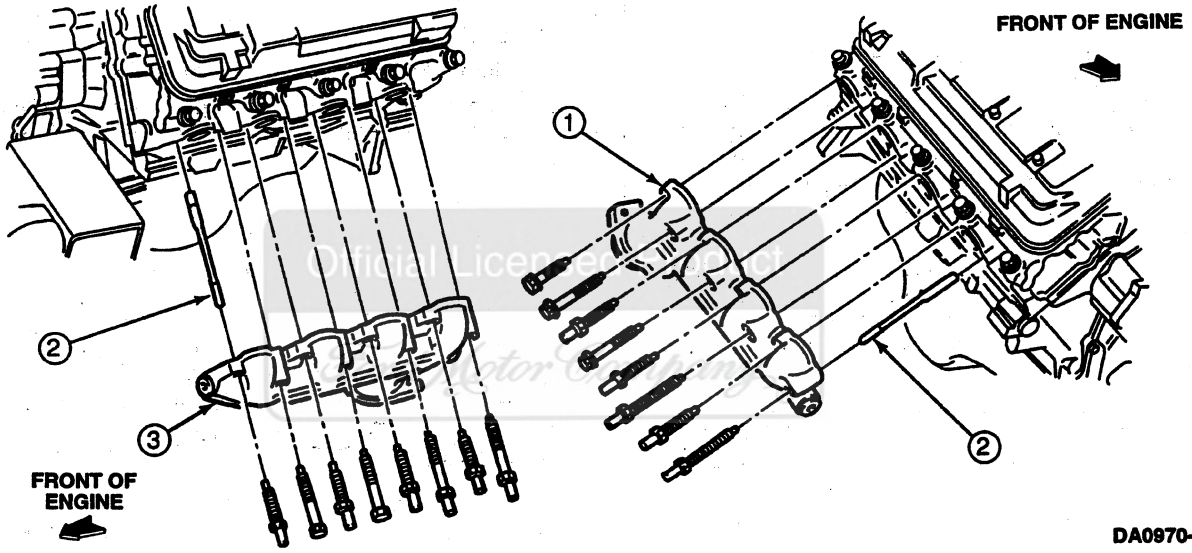

Item	Part Number	Description
1	9430	Exhaust Manifold(RH)
2	—	Guide Pin (Part of 9428)

Item	Part Number	Description
3	9431	Exhaust Manifold(LH)

(Continued)

3. Position inlet pipes to right exhaust manifold or left exhaust manifold. Install attaching nuts and tighten to 34-47 N·m (25-35 lb-ft).
4. Position the secondary air injection check valve tube and the secondary air injection tube gasket (9C435) at rear of right-hand exhaust manifold. Install attaching bolts and tighten to 19-25 N·m (14-18 lb-ft).
5. Attach the secondary air injection manifold tube (9B449) to left-hand exhaust manifold fitting (located under EGR tube). Tighten nut to 30-40 N·m (22-30 lb-ft).
6. Attach the secondary air injection check valve tube to rear of right-hand cylinder head. Tighten bolts to 75-85 N·m (56-62 lb-ft).

IN-VEHICLE SERVICE (Continued)

Secondary Air Injection System

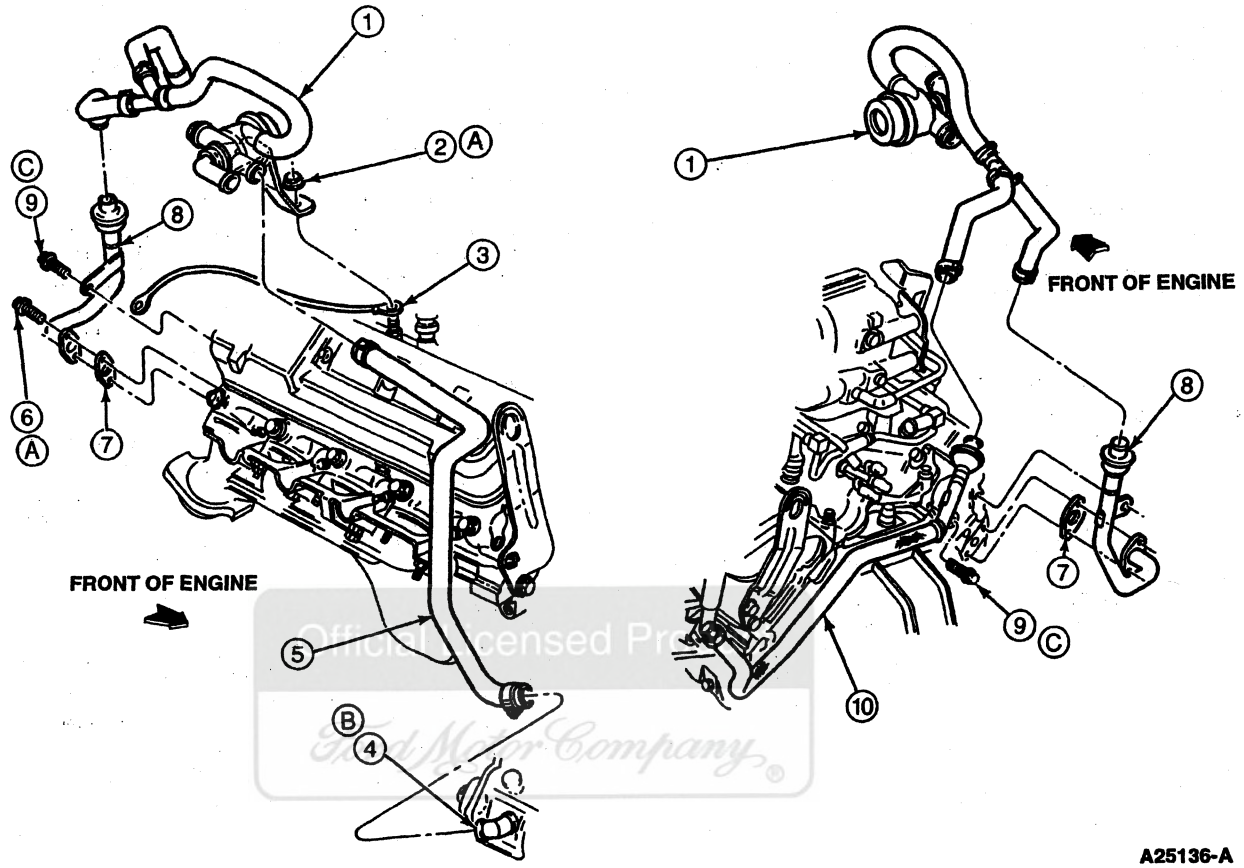

Item	Part Number	Description
1	9G442	Valve and Bracket Assy
2	45338-S36	Nut
3	19A05	Ground Strap
4	9A486	Air Supply Pump Assy
5	9S433	Hose Assy
6	56720-S2	Bolt
7	9C435	Exhaust Air Supply Tube Gasket
8	9B480	Exhaust Air Supply Check Valve

(Continued)

Item	Part Number	Description
9	56558-S36	Bolt
10	9B449	Exhaust Air Supply Manifold (LH)
A	—	Tighten to 19-25 N·m (14-18 Lb-Ft)
B	—	No Lubricants are to be Introduced to the Inside of the Pump Assy
C	—	Tighten to 53-72 N·m (39-53 Lb-Ft)

7. Connect EGR valve to exhaust manifold tube to left exhaust manifold, if removed. Tighten nut to 53-72 N·m (39-53 lb-ft).
8. Install spark plug heat shield and distributor to spark plug wires.
9. Install oil level indicator tube to left exhaust manifold, if removed. Tighten nut to 13-24 N·m (10-18 lb-ft).

10. Start engine (6007) and check for exhaust leaks.

Oil Pan/Oil Pump Screen Cover and Tube

Removal

1. Disconnect the battery ground cable (14301).

IN-VEHICLE SERVICE (Continued)

2. Drain the cooling system. Refer to Section 03-03.
3. Remove the engine air cleaner (ACL)(9600) and air cleaner outlet tube (9B659).
4. Remove fan shroud (8146), fan blade (8600) and water pump pulley (8509).
5. Disconnect throttle body linkage and wiring.
6. Disconnect vacuum lines from upper and lower intake manifolds (9424). Tag lines to aid in reassembly.
7. Perform fuel system pre-service. Refer to Section 03-04B. Using Spring Lock Coupling Disconnect Tool D87L-9280-A and -B or equivalent, disconnect fuel supply and return lines.
8. Disconnect the upper radiator hose (8260) and lower radiator hose (8286).
9. Disconnect the two transmission oil cooler lines at the radiator (8005).
10. Remove the power steering pump (3A674) and position out of the way.
11. Disconnect the front engine support insulators (6038) from the front engine support brackets.
12. If so equipped, rotate air conditioner lines (at rear of A/C compressor (19703)) down to clear the dash. Remove A/C compressor without disconnecting hoses and set out of the way.
13. Raise the vehicle on a hoist, drain the crankcase, and remove the oil bypass filter (6714).
14. Remove the muffler inlet pipe assembly. Disconnect the manual kickdown linkage from the transmission (7003).
15. Remove the driveshaft (4602) and coupling shaft assembly. Remove the oil filler tube (7A228) assembly
16. Remove the oil level dipstick (6750) and oil level indicator tube (6754) from the oil pan (6675). Refer to Oil Level Indicator Tube in the In-Vehicle Service portion of this section. Place a transmission jack under the engine oil pan. Insert a wood block between the jack surface and the oil pan. Jack the engine (6007) upward, pivoting about the rear mount until the transmission contacts the floorpan. Then, block the engine in position at the engine front supports. The engine must remain centralized to obtain the maximum height. The engine must be raised 102 mm (four inches) at the engine front supports to remove the oil pan.
17. Remove the oil pan retaining bolts and oil pan flange reinforcement (6A674). Lower the oil pan. Remove the oil pump and pickup tube attachments. Drop the oil pump (6600) and oil pump screen cover and tube (6622) into the oil pan. Remove the oil pan rearward from the vehicle.

Installation

1. Clean the oil pan gasket surface at the cylinder blocks (6010). Clean the oil pan assembly, the oil pump screen cover and tube. Prime the oil pump by filling the inlet opening with oil and rotate the oil pump intermediate shaft (6A618) until oil emerges from the outlet opening.

Unlicensed Product Ford Motor Company

IN-VEHICLE SERVICE (Continued)

2. Lightly apply Gasket Maker E2AZ-19562-B or equivalent meeting Ford specification WSK-M2G348-A5 to the cylinder block surface and a 6-mm (1/4-inch) diameter bead to engine front cover (6019) and rear main bearing cap as shown. Also apply a bead at the parting line of engine front cover and cylinder blocks. Position the one-piece silicone oil pan gasket (6710) to the cylinder blocks and press lightly until oil pan gasket sticks to surface. Position the oil pan with oil pump and oil pump screen cover and tube to the chassis. Install the oil pump and oil pump screen cover and tube to the cylinder blocks. Tighten attaching bolts to 30-43 N·m (22-32 lb-ft).

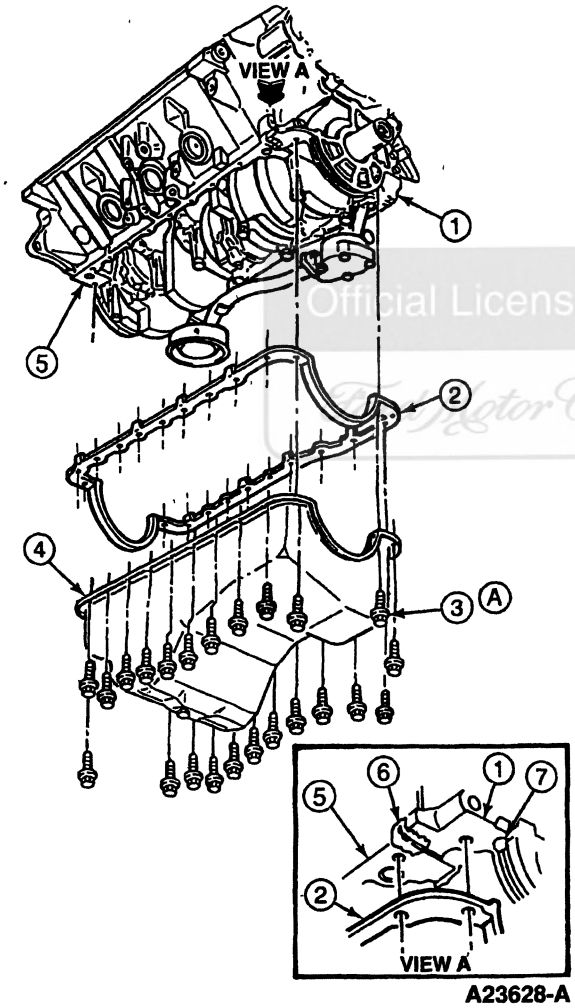

A23628-A

Item	Part Number	Description
1	6019	Engine Front Cover
2	6710	Oil Pan Gasket
3	391496-S2	Bolt
4	6675	Oil Pan
5	6010	Cylinder Blocks
6	E2AZ-19562-B	Gasket Maker (2 Places)
7	E2AZ-19562-B	Gasket Maker (4 Places)
A	—	Tighten to 11-16 N·m (8-12 Lb-Ft)

(Continued)

3. Position the oil pan to the cylinder blocks position oil pan flange reinforcement and install the attaching bolts. Tighten 1/4-inch bolts to 11-16 N·m (8-12 lb-ft).
4. Place jack under engine and raise engine enough to remove blocks.
5. Lower engine and remove jack.
6. Install the oil level indicator tube and oil level dipstick. Refer to Oil Level Indicator Tube in the In-Vehicle Service portion of this section.
7. Reposition the air conditioner lines, if so equipped. If removed, reinstall A/C compressor.
8. Install the front engine support insulator-to-front engine support bracket retaining nuts. Tighten nuts to 96-127 N·m (71-94 lb-ft). Connect the manual kickdown linkage at the transmission. Install the driveshaft and coupling shaft assembly, and the muffler inlet pipe assembly.
9. Clean the oil filter mounting surface and install the oil bypass filter.
10. Lower the vehicle from the hoist.
11. Install the radiator and connect the two transmission oil cooler lines.
12. Install the fan blade and fan shroud, and then connect the lower radiator hose and upper radiator hose.
13. Connect vacuum lines to upper and lower intake manifold.
14. Connect the throttle and transmission linkage at the throttle body (9E926).
15. Install the power steering pump and drive belt (8620).
16. Install the engine air cleaner and air cleaner outlet tube.
17. Fill and bleed the cooling system. Refer to Section 03-03.
18. NOTE: When the battery (10655) has been disconnected and reconnected, some abnormal drive symptoms may occur while the powertrain control module (PCM)(12A650) relearns its adaptive strategy. The vehicle may need to be driven 16 km (10 miles) or more to relearn the strategy.

    Connect the battery ground cable.
19. Fill the crankcase with engine oil. Start the engine and check for leaks.

Official Licensed Product Ford Motor Company

IN-VEHICLE SERVICE (Continued)

Oil Pump

The oil pump (6600) and oil pan (6675) must be removed together. Refer to Oil Pan / Oil Pump Screen Cover and Tube in the In-Vehicle Service portion of this section.

Crankshaft

Refer to Crankshaft in the Removal and Installation portion of this section.

Crankshaft Main Bearings

Crankshaft main bearings (6333), crankshaft thrust main bearings (6337) and connecting rod bearings (6211) are selective fits. Refer to Section 03-00.

Removal

1. Drain the crankcase. Remove the oil level dipstick (6750). Remove the oil pan (6675), oil pump (6600) and related parts. Refer to Oil Pan / Oil Pump Screen Cover and Tube in the In-Vehicle Service portion of this section.
2. Replace one crankshaft main bearing or crankshaft thrust main bearing at a time, leaving other crankshaft main bearings securely fastened. Remove the crankshaft main bearing cap to which new crankshaft main bearings or crankshaft thrust main bearings are to be installed.
3. Insert Main Bearing Insert Tool TOOL-6331-E or equivalent in oil hole in crankshaft (6303).
4. Rotate the crankshaft in the direction of engine rotation to force crankshaft main bearing or crankshaft thrust main bearing out of block.
5. Clean the crankshaft journals. Inspect journals and thrust faces (crankshaft thrust main bearing) for nicks, burrs or bearing pickup that would cause premature bearing wear.

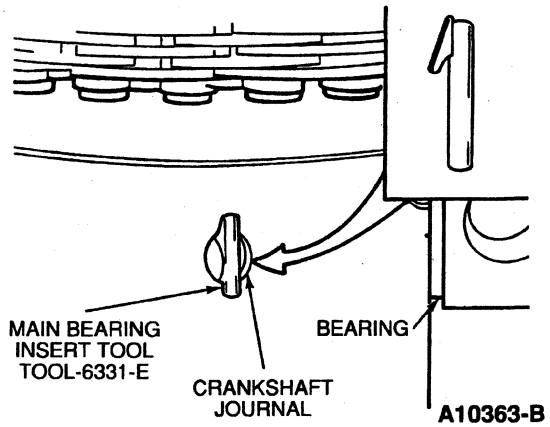

Installation

1. To install upper half of crankshaft main bearing or crankshaft thrust main bearing, place plain end of crankshaft main bearing or crankshaft thrust main bearing over crankshaft on locking tang side of cylinder blocks (6010) and partially install crankshaft main bearing or crankshaft thrust main bearing so Main Bearing Insert Tool TOOL-6331-E or equivalent can be inserted into oil hole in crankshaft. With Main Bearing Insert Tool TOOL-6331-E or equivalent in oil hole, rotate the crankshaft in the opposite direction of engine rotation until the crankshaft main bearing or crankshaft thrust main bearing seats itself. Remove the tool.
2. Fit the crankshaft main bearings or crankshaft thrust main bearings with Plastigage®. Refer to Section 03-00.
3. After the crankshaft main bearing or crankshaft thrust main bearing has been fitted, apply light coat of specified engine oil to journal and crankshaft main bearings or crankshaft thrust main bearings. Install the crankshaft main bearing cap. Tighten the crankshaft main bearing cap bolts to 129-142 N·m (95-105 lb-ft).
4. Repeat the procedure for remaining crankshaft main bearings or crankshaft thrust main bearings requiring replacement.
5. If the rear crankshaft main bearing is to be replaced, remove the rear crankshaft main bearing cap. Remove and discard the crankshaft rear oil seal (6701).
6. Clean rear journal oil seal groove and mating surfaces of cylinder blocks and rear crankshaft main bearing cap.
7. Install the new crankshaft rear oil seal. Refer to Crankshaft Rear Oil Seal in the In-Vehicle Service portion of this section.
8. Refer to Crankshaft Rear Oil Seal in the In-Vehicle Service portion of this section for procedure used in sealing the rear crankshaft main bearing cap. After sealing, install the rear crankshaft main bearing cap. Tighten rear crankshaft main bearing cap bolts to 129-142 N·m (95-105 lb-ft).
9. If thrust bearing cap (No. 3) has been removed, install as follows:
   a. Install the thrust bearing cap with bolts finger-tight.
   b. Pry the crankshaft forward against the thrust surface of upper half of crankshaft thrust main bearing.
   c. Hold the crankshaft forward and pry crankshaft thrust main bearing cap to rear. This aligns thrust surfaces of both halves of crankshaft thrust main bearing.
   d. Retain forward pressure on crankshaft.
   e. Tighten cap bolts to 129-142 N·m (95-105 lb-ft).

Ford Licensed Product

IN-VEHICLE SERVICE (Continued)

Tightening Crankshaft Thrust Main Bearing Cap

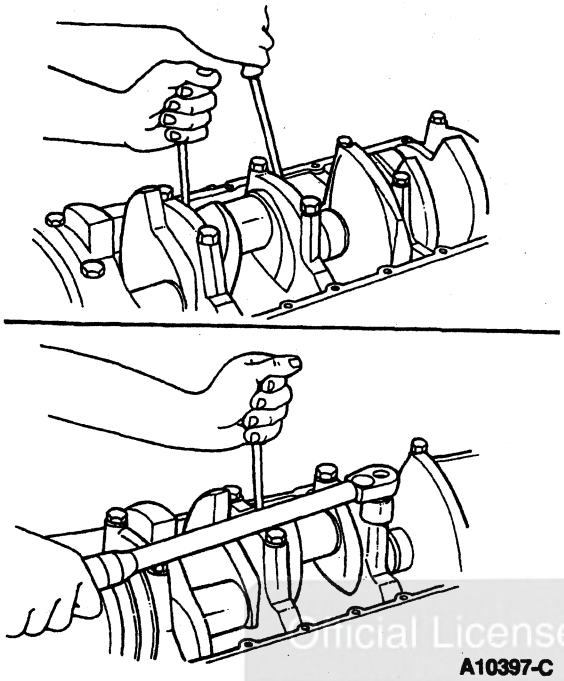

A10397-C

10. Clean the oil pump screen cover and tube (6622). Prime the oil pump by filling the inlet opening with oil and rotate the oil pump intermediate shaft (6A618) until oil emerges from the outlet opening.
11. Install the oil pan and oil pump. Refer to Oil Pan / Oil Pump Screen Cover and Tube in the In-Vehicle Service portion of this section.
12. Fill the crankcase. Start the engine (6007) and check for oil pressure. Operate the engine at fast idle and check for oil leaks.

Pistons and Connecting Rods

Removal

1. Drain the crankcase. Drain the cooling system. Refer to Section 03-03.
2. Remove the lower intake manifold (9424), cylinder heads (6049), oil pan (6675) and oil pump (6600). Refer to Intake Manifold, Lower, Cylinder Heads, and Oil Pan / Oil Pump Screen Cover and Tube in the In-Vehicle Service portion of this section.
3. Remove any ridge or deposits from upper end of cylinder bores as follows:
   a. Turn the crankshaft (6303) until the piston (6108) to be removed is at bottom of its travel.
   b. Place a cloth on top of the piston to collect cuttings.
   c. Remove any ridge or deposits from the upper end of the cylinder bore. Remove the cylinder ridge with a ridge cutter. Follow instructions furnished by tool manufacturer. Never cut into ring travel area in excess of 0.79 mm (1/32 inch) when removing ridges.
   d. Repeat the procedure at the remaining cylinders.
4. Make sure all connecting rod bearing caps are marked so they can be installed in their original positions.
5. Turn the crankshaft until the connecting rod (6200) being removed is down.
6. Remove the connecting rod nuts and connecting rod bearing cap.
7. **CAUTION: Avoid damage to the crankshaft journal and cylinder wall when removing the piston and connecting rod.**

   Push the connecting rod and piston out through the top of the cylinder with the handle end of a hammer or a suitable piston hammer.
8. Remove the connecting rod bearings (6211) from the connecting rod and connecting rod bearing cap.
9. Install the connecting rod bearing cap on the connecting rod from which it was removed.

Installation

1. If new partial piston ring sets (6148) are to be installed, remove the cylinder wall glaze. Refer to Section 03-00. Clean cylinder bores with soap and water after honing or deglazing. Dry and oil immediately after cleaning.
2. Oil the partial piston ring sets, pistons and cylinder walls with recommended quality engine oil. Be sure to install pistons into cylinders from which they were removed or to which they were fitted. Connecting rod and connecting rod bearing caps are numbered from 1 to 4 in the right bank, and 5 to 8 in the left bank, beginning at the front of engine (6007). Numbers on the connecting rod and connecting rod bearing cap must be on the same side when installed in the cylinder bore. If a connecting rod is ever transposed from one cylinder blocks (6010) or cylinder to another, new connecting rod bearings should be fitted and the connecting rod should be numbered to correspond with the new cylinder number.

Official Licensed Product

IN-VEHICLE SERVICE (Continued)

3. NOTE: Refer to the following illustration.
   Make sure piston ring gaps (oil ring spacer A, oil ring segments B, and compression rings C) are properly spaced around circumference of piston.

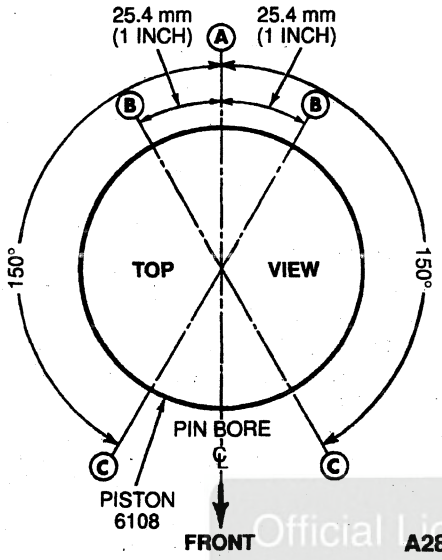

4. Turn the crankshaft until the connecting rod journal reaches the bottom of its stroke.
5. Install Piston Ring Compressor D81L-6002-C or equivalent on piston and push in with hammer handle or a suitable piston hammer until it is slightly below top of cylinder. Be sure to guide connecting rods while tapping them into position to avoid damaging crankshaft journals. Install piston with indentation notch in piston head toward front of engine. Push the piston down into the cylinder until the connecting rod bearings seat on the crankshaft journal.

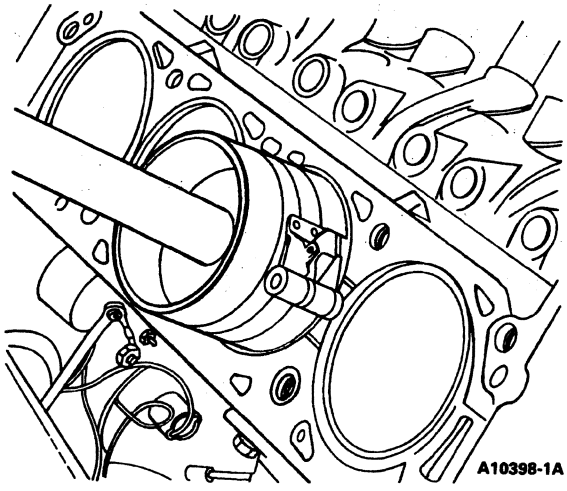

6. Check clearance of each connecting rod bearing using Plastigage® or equivalent. Refer to Section 03-00.
7. After the connecting rod bearings have been fitted, apply a light coat of recommended quality engine oil to the journals and connecting rod bearings.
8. Install the connecting rod bearing cap. Make sure connecting rod bolt heads are properly seated in the connecting rod. Tighten the nuts to 61-68 N·m (45-50 lb-ft).
9. After the piston and connecting rod assemblies have been installed, check the side clearance between the connecting rods on each crankshaft journal. Refer to Section 03-00.
10. Measure piston deck height as follows:
    a. Set up Dial Indicator with Bracketry TOOL-4201-C or D78-4201-B or equivalent as shown.

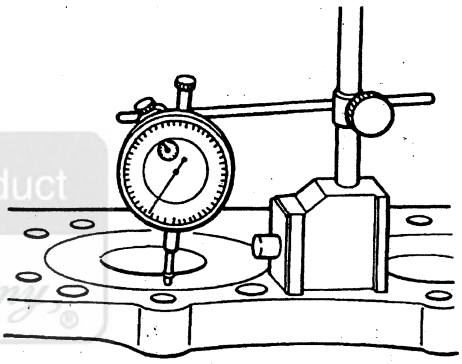

    b. Turn the crankshaft in normal direction of rotation until the piston is flush with the deck face of the cylinder blocks. Use a straightedge laid on the cylinder block deck across the piston bore to determine if the piston is resting at the flush location.
    c. Set the dial indicator to zero at this point. The probe of the dial should have some pressure against it before setting the indicator at zero.
    d. Continue rotating the crankshaft slowly until the piston is at TDC. Read the dial indicator.
11. If the dial recorded a reading, this indicates that the piston is protruding above the cylinder blocks by the measurement noted on the dial. Compare the reading with the specification for the model year of the vehicle. If the dial did not record any protrusion in Step b above, then the piston is either flush with the cylinder block deck, or is below the deck face. To determine the amount of piston recession below the cylinder block deck, perform the following:
    a. Remove dial indicator from engine.
    b. Rotate the crankshaft until the piston reaches TDC.

Official Licensed Product

IN-VEHICLE SERVICE (Continued)

c. Use a known, good straightedge and lay it on the cylinder block deck across the cylinder bore.

d. Measure the gap (if any) between the top of the piston crown and the straightedge using a feeler gauge. This measurement determines the amount of piston recession below the deck face. Compare this with the specification for the model year of the vehicle.

12. Disassemble, clean and inspect oil pump. Refer to Section 03-00. Reassemble or replace oil pump as required. Clean the oil pump screen cover and tube (6622), oil pan, and the block gasket surfaces.
13. Prime the oil pump by filling the inlet port with engine oil and rotating the oil pump intermediate shaft (6A618) to distribute oil within the housing. Install the oil pump and the oil pan. Refer to Oil Pan / Oil Pump Screen Cover and Tube in the In-Vehicle Service portion of this section.
14. Install the cylinder heads. Refer to Cylinder Heads in the In-Vehicle Service portion of this section.
15. Install the lower intake manifold. Refer to Intake Manifold, Lower, in the In-Vehicle Service portion of this section.
16. Fill and bleed the cooling system. Refer to Section 03-03. Fill the crankcase to the correct level with the specified engine oil.
17. Start the engine and adjust the ignition timing to specifications listed on the engine decal.
18. Operate the engine at fast idle and check for oil and coolant leaks after the engine temperature has stabilized.
19. Install the engine air cleaner (ACL)(9600) and air cleaner outlet tube (9B659).

Connecting Rod Bearings

Removal

1. Drain the crankcase. Remove the oil level dipstick (6750). Remove the oil pan (6675), oil pump (6600) and related parts. Refer to Oil Pan / Oil Pump Screen Cover and Tube in the In-Vehicle Service portion of this section.
2. Turn the crankshaft (6303) until connecting rod (6200) to which new bearings are to be fitted is down. Remove the connecting rod bearing cap. Remove the connecting rod bearings (6211) from connecting rod and connecting rod bearing cap.
3. Make sure connecting rod bearings and bearing bore in connecting rod and connecting rod bearing cap are clean. Foreign material under connecting rod bearings will distort connecting rod bearing and cause a failure.
4. Clean the crankshaft journal. When replacing standard connecting rod bearings with new connecting rod bearings, it is good practice to fit the connecting rod bearing to minimum specified clearance. Refer to Specifications in this section.

Installation

Refer to Section 03-00 for cleaning and inspection procedures.

1. Fit connecting rod bearings using Plastigage® or equivalent. Refer to Section 03-00.
2. Install the connecting rod bearing in the connecting rod and connecting rod bearing cap with tangs in the slots provided.
3. Pull the connecting rod assembly down firmly on the crankshaft journal (guide connecting rod to prevent crankshaft journal damage).
4. Apply a light coat of specified engine oil to the journal and connecting rod bearing. Install the connecting rod bearing cap. Make sure the connecting rod bolt heads are properly seated in the connecting rod. Tighten the nuts to 61-68 N·m (45-50 lb-ft).
5. Repeat the procedure for the remaining connecting rods that require new connecting rod bearings.
6. Install oil pan, oil pump and related parts. Refer to Oil Pan / Oil Pump Screen Cover and Tube in the In-Vehicle Service portion of this section.

Flywheel

Removal

1. Remove the transmission (7003) from vehicle. Refer to Section 07-01 or Section 07-03. Remove the flywheel mounting bolts and remove flywheel (6375) from the crankshaft (6303).
2. Refer to Section 03-00 for inspection.

Installation

1. Install flywheel on crankshaft. Install the mounting bolts. Tighten to 103-115 N·m (75-85 lb-ft).
2. Check flywheel runout and flywheel ring gear runout using Rotunda Dial Indicator with Bracketry 014-00282 or equivalent. Refer to Specifications in this section. If readings are not within specification, replace flywheel.

IN-VEHICLE SERVICE (Continued)

3. Install transmission assembly into vehicle. Refer to Section 07-01 or Section 07-03.

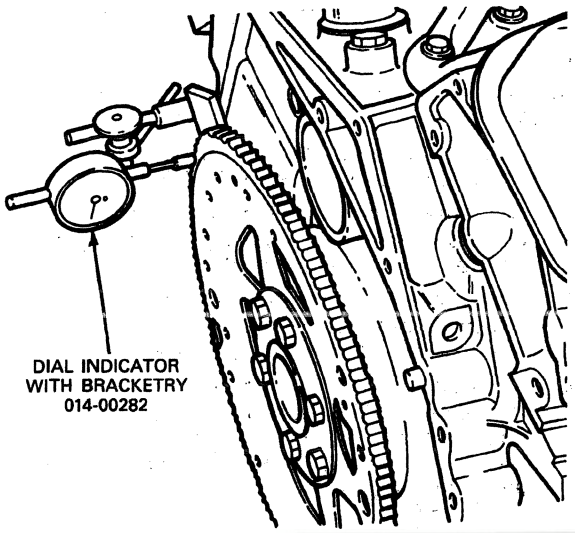

A10078-B

Mainshaft Bearing Roller

Refer to Section 08-01.

Crankshaft Rear Oil Seal

Removal

1. Remove the oil pan (6675). Refer to Oil Pan / Oil Pump Screen Cover and Tube in the In-Vehicle Service portion of this section.
2. Loosen all the crankshaft main bearing cap bolts, thereby lowering the crankshaft (6303) slightly but not to exceed 0.7938 mm (1/32 inch).
3. **CAUTION: Use care to prevent scratching or damaging the crankshaft sealing surfaces.**

   Remove the rear crankshaft main bearing cap, and remove the crankshaft rear oil seal (6701) from the rear crankshaft main bearing cap and cylinder blocks (6010). On the cylinder block half of the crankshaft rear oil seal, use a seal removal tool, or install a small metal screw in one end of the crankshaft rear oil seal, and pull on the screw to remove the crankshaft rear oil seal.

Installation

1. Carefully clean the seal groove in the rear crankshaft main bearing cap and cylinder blocks with a brush and solvent such as lacquer thinner or Metal Surface Cleaner F4AZ-19A536-RA or equivalent meeting Ford specification WSE-M5B392-A. Also, clean the area where sealer is later to be applied. Dry the area thoroughly, so that no solvent touches the crankshaft rear oil seal.
2. Dip the split lip-type seal halves in clean engine oil.
3. **CAUTION: Be sure no rubber has been shaved from the outside diameter of the crankshaft rear oil seal by the bottom edge of the groove. Do not allow oil to get on the sealer area.**

   Carefully install the upper half of the crankshaft rear oil seal (cylinder blocks) into its groove with undercut side of crankshaft rear oil seal toward the FRONT of the engine (6007)(with the tab side of the crankshaft rear oil seal directed toward the rear face of the cylinder blocks), by rotating it on the seal journal of the crankshaft until approximately 9.525 mm (3/8 inch) protrudes below the parting surface.

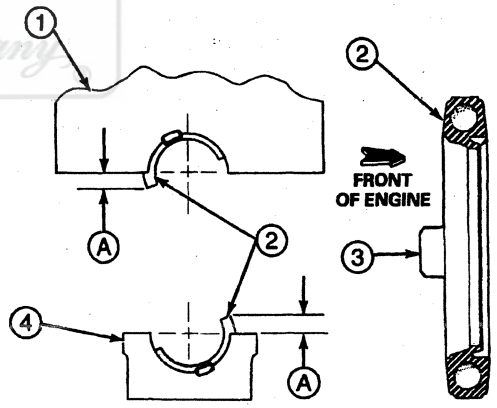

A2639-H

Item	Part Number	Description
1	6010	Cylinder Blocks
2	6701	Crankshaft Rear Oil Seal
3	—	Tab (Part of 6701)
4	—	Crankshaft Rear Main Bearing Cap (Part of 6010)
A	—	9.53 mm (3/8 Inch)

4. Tighten the remaining crankshaft main bearing cap bolts to specifications. Refer to Specifications in this section.

Official Licensed Product
Ford Motor Company

IN-VEHICLE SERVICE (Continued)

5. Install the lower half of the crankshaft rear oil seal in the rear crankshaft main bearing cap with undercut side of crankshaft rear oil seal toward the front of the engine with the tab side of the crankshaft rear oil seal directed toward the rear face of the cylinder blocks). Allow the crankshaft rear oil seal to protrude approximately 9.525 mm (3/8 inch) above the parting surface to mate with the upper half of the crankshaft rear oil seal when the rear crankshaft main bearing cap is installed.
6. NOTE: Sealer sets up in 15 minutes.

   Apply a continuous even 1.588-mm (1/16-inch) diameter bead of Gasket Maker E2AZ-19562-B or equivalent meeting Ford specification WSK-M2G348-A5 to the crankshaft rear oil seal area of the cylinder blocks starting from the forward face of the oil return groove and overlaying end of wire seal retainer. Do not allow sealer to contact inside diameter of the crankshaft rear oil seal.

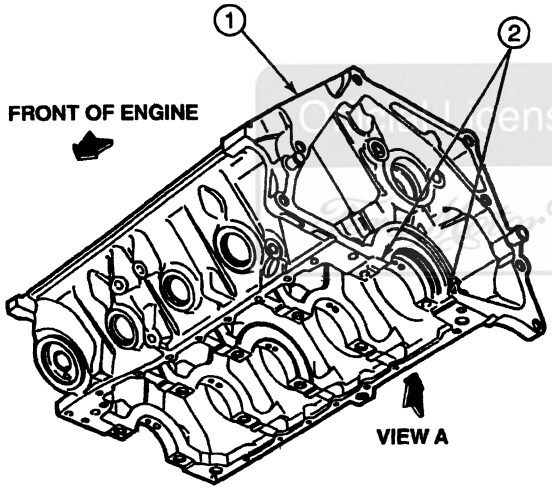

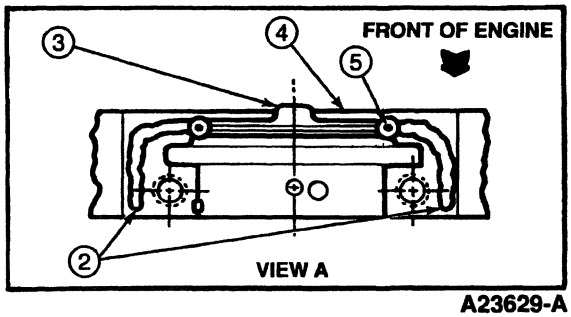

A23629-A

Item	Part Number	Description
1	6010	Cylinder Blocks
2	E2AZ-19562-B	Gasket Maker (2 Places)

(Continued)

Item	Part Number	Description
3	6701	Crankshaft Rear Oil Seal
4	—	Rear Face of 6010
5	—	Wire Seal Retainer (Part of 6701)

7. Install the rear crankshaft main bearing cap. Tighten the bolts to specifications listed at the end of this section.
8. Install the oil pump (6600) and oil pan. Refer to Oil Pan/Oil Pump Screen Cover and Tube in the In-Vehicle Service portion of this section. Fill the crankcase with the proper amount and type of oil.
9. Operate the engine and check for oil leaks.

Camshaft Rear Bearing Cover

Removal

1. Remove the transmission (7003) from the vehicle. Refer to Section 07-01 or Section 07-03.
2. Remove flywheel (6375) and engine rear plate (7007).
3. Replace the camshaft rear bearing cover (6266). Refer to Engine Block Plugs service procedure in Section 03-00.

Installation

1. Install the engine rear plate and flywheel.
2. Install the transmission. Refer to Section 07-01 or Section 07-03.

Oil Bypass Filter/Adapter/Oil Cooler

Removal

1. Place a drip pan under the oil bypass filter (6714). Unscrew the oil bypass filter from the engine oil cooler (6B856) using an oil filter wrench. Clean the oil filter mounting insert (6890) or engine oil cooler recess. Clean the oil bypass filter gasket surface. Make sure oil bypass filter gasket is not stuck on oil filter mounting insert or engine oil cooler.

Installation

1. Coat the oil bypass filter gasket on a new oil bypass filter with specified engine oil. Place the new oil bypass filter on the oil filter mounting insert or engine oil cooler. Hand-tighten the oil bypass filter until the oil bypass filter gasket contacts the sealing surface, then tighten another one-half turn.

IN-VEHICLE SERVICE (Continued)

2. Add one quart of oil. Operate the engine (6007) at fast idle and check for oil leaks. If oil leaks are evident, perform the necessary service to correct the leakage. Check the oil level and fill the crankcase to the correct level.

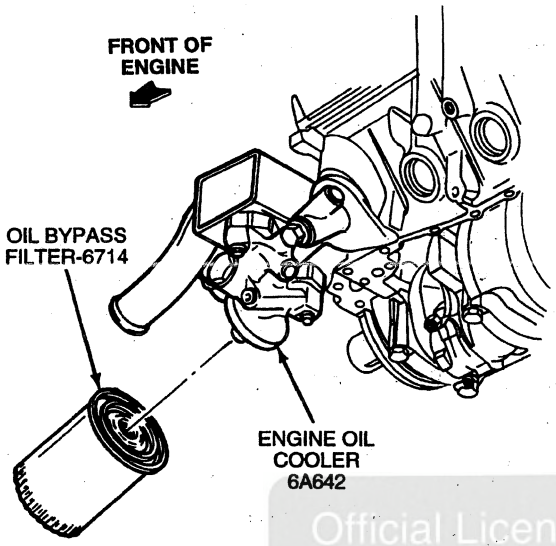

A15118-D

Engine Oil Cooler

Removal

1. Drain the engine cooling system. Refer to Section 03-03.
2. Raise the vehicle. Refer to Section 00-02 in the Body, Chassis Manual.
3. Remove the oil bypass filter.
4. Disconnect the lower radiator hose (8286) from the engine oil cooler.
5. Loosen the hose clamp securing the engine oil cooler hose to the water pump (8501).
6. Remove the oil filter adapter mounting bolt (6894).
7. Disconnect the engine oil cooler hose at the water pump and remove the engine oil cooler.
8. Disconnect the engine oil cooler hose from the engine oil cooler.
9. If necessary, remove the oil filter mounting insert.
10. Clean the engine oil cooler with a commercially available, environmentally safe solvent and dry with compressed air.
11. Inspect the engine oil cooler for sludge deposits, housing cracks, bent hose connections or other visible damage. Replace the engine oil cooler if any damage is found.

Engine Oil Cooler

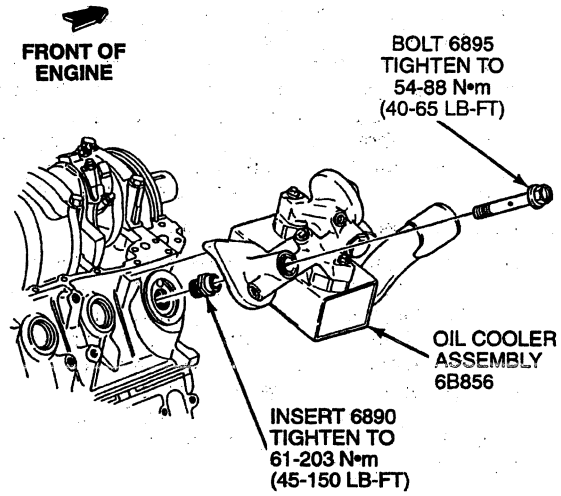

DA0969-A

Installation

1. If removed, install the oil filter mounting insert and tighten to 61-203 N•m (45-150 lb-ft).
2. Connect the engine oil cooler hose to the engine oil cooler and slide both hose clamps over the engine oil cooler hose.
3. Push the engine oil cooler hose onto the water pump inlet until bottomed against inlet ridge. Align arrow on engine oil cooler hose with notch on inlet ridge.
4. Install the engine oil cooler by piloting the adapter portion onto the oil filter mounting insert.
5. Install the oil filter adapter mounting bolt and tighten to 54-88 N•m (40-65 lb-ft).
6. Tighten both hose clamps securing the engine oil cooler hose to 1.6-2.8 N•m (14-24 lb-in).
7. Connect the lower radiator hose to the engine oil cooler and tighten the hose clamp to 3-4 N•m (27-35 lb-in).
8. Coat the oil bypass filter gasket on a new oil bypass filter with specified engine oil. Place the new oil bypass filter on the engine oil cooler and hand-tighten until the oil bypass filter gasket contacts the sealing surface, then tighten an additional one-half turn.
9. Lower the vehicle. Refer to Section 00-02 in the Body, Chassis Manual.
10. Fill the crankcase with the proper grade and quantity of engine oil.
11. Fill and bleed the engine cooling system. Refer to Section 03-03.
12. Operate the engine at fast idle and check for engine oil and coolant leaks. If leaks are evident, perform the necessary repairs to correct the leakage.

Official Licensed Product
Ford Motor Company

IN-VEHICLE SERVICE (Continued)

Oil Level Indicator Tube

Removal

1. Remove the oil level dipstick (6750).
2. Clean the area where the oil level indicator tube (6754) connects to the oil pan (6675).
3. Remove the nut securing the oil level indicator tube support to the exhaust manifold stud.
4. Remove the clip retaining the oil level indicator tube to the oil pan.
5. Remove the oil level indicator tube.
6. Cover the opening in the oil pan to prevent any contaminants from entering the oil pan.

Installation

1. Follow the removal procedures in reverse order.
2. Tighten the retaining nut to 13-24 N·m (10-18 lb-ft).

Official Licensed Product
Ford Motor Company

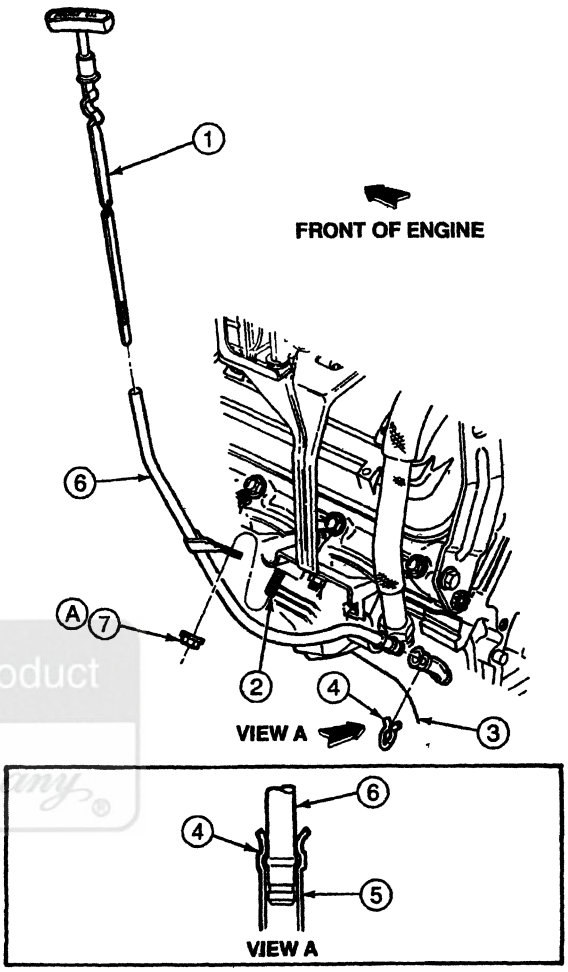

A23630-A

Item	Part Number	Description
1	6750	Oil Level Dipstick
2	391335-S101	3/8-16 x 3.77 Hex Shoulder Flange Stud
3	6675	Oil Pan
4	N808064-S100	Clip
5	—	Oil Pan Adapter (Part of 6675)
6	6754	Oil Level Indicator Tube
7	382802-S2	3/8-16 Nut
A	—	Tighten to 13-24 N·m (10-18 Lb-Ft)

IN-VEHICLE SERVICE (Continued)

Sensors

Oil Pressure Sender

Removal

1. Disconnect the wire at the oil pressure sensor (9278).
2. Prepare the new oil pressure sensor for installation by applying Pipe Sealant with Teflon® D8AZ-19554-A or equivalent meeting Ford specification WSK-M2G350-A2 or a small amount of electrically conductive sealer to the threads.
3. Remove the oil pressure sensor from its mounting.

Installation

1. Immediately install the new oil pressure sensor. Tighten to 11-24 N·m (8-18 lb-ft).
2. Connect wire to oil pressure sensor.
3. Start the engine (6007) and check the operation of the oil pressure sensor.

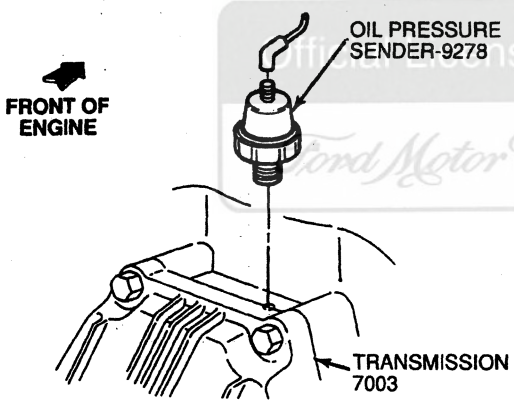

K12784-D

REMOVAL AND INSTALLATION

Engine

SPECIAL SERVICE TOOL(S) REQUIRED

Description	Tool Number
Engine Lifting Brackets	T70P-6000

Removal

1. Drain the crankcase. Drain the cooling system. Refer to Section 03-03. Remove hood.
2. Disconnect the battery ground cable (14301) from the battery.
3. Disconnect the secondary air injection manifold tube (9B449) at the right-hand side of the engine air cleaner (ACL)(9600). Perform all fuel charging system pre-service procedures. Refer to Section 03-04B.
4. Disconnect the air cleaner outlet tube (9B659) at the throttle body (9E926) and upper intake manifold (9424). The engine air cleaner and air cleaner outlet tubes can now be removed, after disconnecting the engine air cleaner hot air tube (9652) at the engine air cleaner.
5. Remove the secondary air injection silencer inlet hose (9J435) connected to the engine air cleaner hot air tube and remove the engine air cleaner hot air tube.
6. Remove the engine air cleaner and air cleaner outlet tube, including the crankcase ventilation hose (6853). Disconnect the fuel vapor return valve from the wiring harness connector and remove the fuel vapor return hose and valve assembly from the positive crankcase ventilation valve (PCV valve)(6A666).
7. Disconnect the lower radiator hose (8286) and upper radiator hose (8260) at the radiator (8005). If equipped with an automatic transmission (7003), disconnect the transmission oil cooler lines.
8. If so equipped, discharge the air conditioning system and remove the A/C condenser core (19712). Refer to Section 12-00 and Section 12-03A in the Body, Chassis Manual. Disconnect air conditioning lines at the A/C compressor (19703). Disconnect compressor clutch electrical lead.
9. Remove the fan shroud (8146) and position it over the fan blade (8600). Remove the radiator. Refer to Section 03-03. Remove the fan shroud, fan clutch (8A616), drive belts (8620) and water pump pulley (8509).

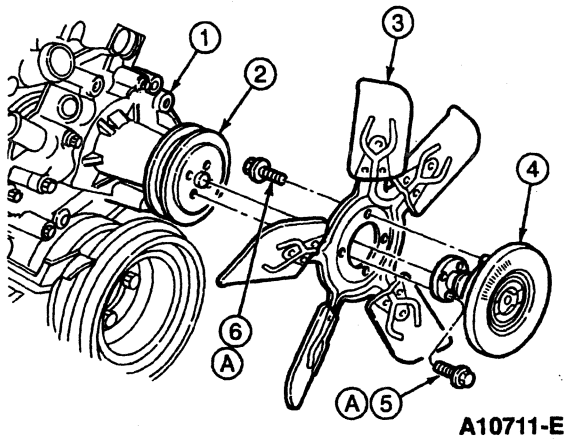

A10711-E

Item	Part Number	Description
1	8501	Water Pump
2	8509	Water Pump Pulley
3	8600	Fan Blade
4	8A616	Fan Clutch

(Continued)

REMOVAL AND INSTALLATION (Continued)

Item	Part Number	Description
5	380288-S2	Screw and Washer Assy
6	57632-S2	Screw and Washer Assy
A	—	Tighten to 16-24 N·m (12-18 Lb-Ft)

10. Remove the generator bolts and allow the generator (GEN)(10300) to swing down and out of the way.
11. Disconnect throttle and transmission linkage at throttle body and remove accelerator cable bracket (9723) from upper intake manifold. Remove the speed control hardware, if so equipped.
12. Disconnect the wiring harness from the oil pressure sensor (9278). Disconnect evaporative emission hoses at the evaporative emissions canister (EVAP canister)(9D653).
13. Disconnect the fuel lines at quick disconnect couplings and vacuum lines to the intake manifold.
14. Disconnect EGR valve to exhaust manifold tube (9D477) at left exhaust manifold (9431) and upper intake manifold. Plug manifold opening.
15. Disconnect power brake booster vacuum hose, if so equipped.
16. Disconnect the heater hoses from the water pump (8501) and intake manifold.
17. Disconnect secondary air injection silencer inlet hose at diverter valve.
18. Remove the flywheel housing-to-engine upper bolts.
19. Disconnect the ground strap from the cylinder blocks (6010).
20. Remove the oil level dipstick (6750) and oil level indicator tube (6754). Refer to Oil Level Indicator Tube in the In-Vehicle Service portion of this section.
21. Raise the front of the vehicle. Disconnect the starter cable from the starter motor (11002). Remove the starter motor. Refer to Section 03-06A.
22. Disconnect the muffler inlet pipes from the left-hand exhaust manifold (9430) and right-hand exhaust manifold. Disconnect the front engine support insulators (6038) from the right-hand front engine support bracket (6028) and left-hand front engine support bracket (6029) on the frame underbody.
23. Raise the engine (6007) slightly and carefully pull it from the transmission. Carefully lift the engine out of the engine compartment so that the engine rear plate (7007) is not bent or other components damaged. Install the engine on a work stand.

Engine Supports, F-250, F-350 and F-Super Duty

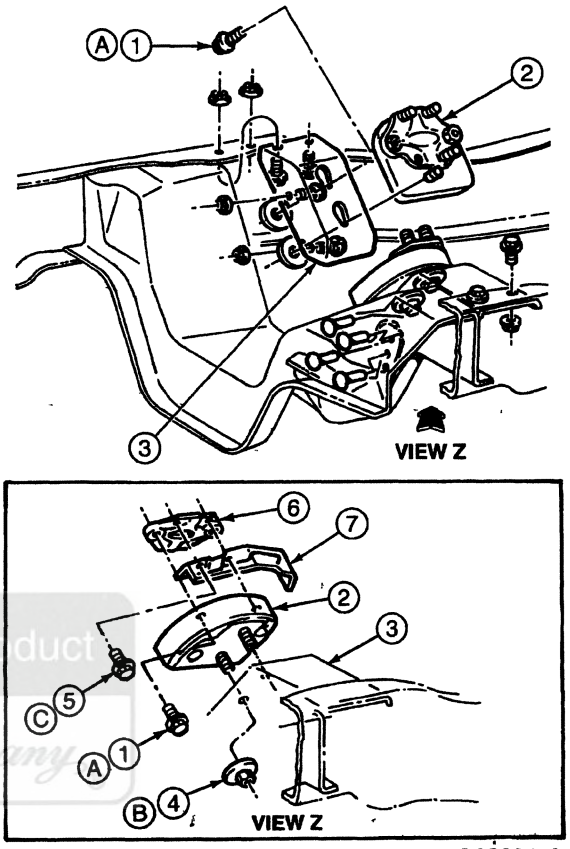

A23631-A

Item	Part Number	Description
1	N803203-S100	Screw and Washer, M12-1.75 x 35
2	6038	Front Engine Support Insulator
3	6028	Front Engine Support Bracket
4	N807479-S301	Nut and Washer, M12-1.75
5	387811-S100	Screw and Washer, 7/16-14 x 1
6	6030	Front Engine Support Mounting Bracket
7	6C038	Engine Mount Heat Shield (Left-Hand Only)
A	—	Tighten to 109-149 N·m (80-109 Lb-Ft)
B	—	Tighten to 88-118 N·m (65-87 Lb-Ft)
C	—	Tighten to 81-109 N·m (60-80 Lb-Ft)

Official Licensed Product Ford Motor Company

REMOVAL AND INSTALLATION (Continued)

Engine Support, F-Super Duty Motorhome Chassis

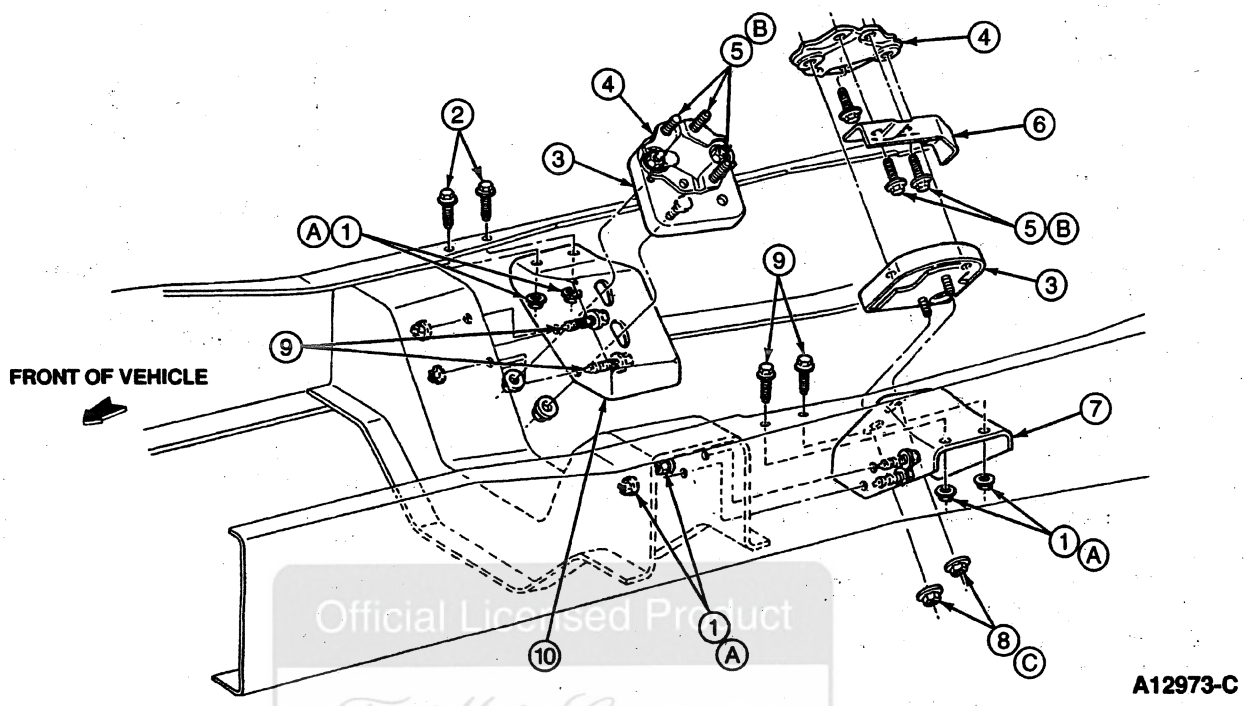

Item	Part Number	Description
1	N800937-S109	Nut
2	N802114-S12	Bolt
3	6038	Front Engine Support Insulator
4	6049	Front Engine Support Mounting Bracket
5	387811-S	Bolt
6	6C038	Engine Mount Heat Shield (Left-Hand Only)
7	6029	Front Engine Support Bracket (Left-Hand)

(Continued)

Item	Part Number	Description
8	N802320-S2	Nut
9	N802114-S	Bolt
10	6028	Front Engine Support Bracket (Right-Hand)
A	—	Tighten to 58-77 N·m (43-56 Lb-Ft)
B	—	Tighten to 81-109 N·m (60-80 Lb-Ft)
C	—	Tighten to 96-127 N·m (71-94 Lb-Ft)

24. Using a Rotunda Low Lift Transmission Jack 164-R3508 or equivalent, support transmission.
25. On a vehicle with automatic transmission, remove the transmission housing cover (7986). Remove the torque converter-to-flywheel attaching bolts. Remove transmission-to-engine bolts.

    On vehicles with manual transmission, remove the engine rear plate from the flywheel housing. Remove the remaining flywheel housing-to-engine bolts.
26. Lower the vehicle, and then support the transmission. Install Engine Lifting Brackets T70P-6000 onto the right-hand front and left-hand rear engine lifting eye (17A084). Attach the engine lifting sling.

Installation

1. Attach Engine Lifting Brackets T70P-6000 and sling. Remove the engine from the work stand.

REMOVAL AND INSTALLATION (Continued)

2. Lower the engine carefully into the engine compartment. Make sure the flywheel housing to block dowels (6397) in the cylinder blocks are through the engine rear plate. Engage flywheel housing to block dowels with holes in the flywheel housing.
3. On a vehicle with manual transmission, start the input shaft (7017) into the clutch disc (7550). It may be necessary to adjust the position of the transmission in relation to the engine if the input shaft will not enter the clutch disc. If the engine hangs up after the input shaft enters, turn the crankshaft (6303) slowly (transmission in gear) until the shaft splines mesh with the clutch disc splines.
4. Install the flywheel housing upper bolts.
5. Install the front engine support insulator-to-front engine support bracket nuts and washers. Tighten to 88-118 N·m (65-87 lb-ft) for F-250, F-350 and F-Super Duty, 96-127 N·m (71-94 lb-ft) for F-Super Duty Motorhome Chassis. Disconnect the engine lifting sling.
6. Install the remaining flywheel housing-to-engine bolts.
7. On a vehicle with automatic transmission, install the converter-to-flywheel attaching bolts. Install the transmission housing cover or the engine rear plate on manual transmissions.
8. Remove the Rotunda Low Lift Transmission Jack 164-R3508 or equivalent from the transmission and lower the vehicle. Remove the Engine Lifting Brackets T70P-6000.
9. Raise the front of the vehicle. Connect the muffler inlet pipes to the left exhaust manifold and right exhaust manifold. Tighten the nuts to 34-49 N·m (25-36 lb-ft).
10. Position and install the starter motor and the starter cable. Refer to Section 03-06A.
11. If so equipped, connect the air conditioning compressor magnetic clutch lead wire.
12. Connect the wiring harness to the oil pressure sensor.
13. Connect the accelerator cable bracket to the upper intake manifold. Connect the transmission and throttle linkage to the throttle body and speed control linkage, if so equipped.
14. Connect the fuel lines. Reconnect evaporative emission hoses at the evaporative emissions canister.
15. Install the water pump pulley, drive belts, fan clutch and fan blade. Position the fan shroud over the fan blade.
16. NOTE: When the battery has been disconnected and reconnected, some abnormal drive symptoms may occur while the powertrain control module (PCM)(12A650) relearns its adaptive strategy. The vehicle may need to be driven 16 km (10 miles) or more to relearn the strategy.

    Position the generator (GEN)(10346) and install the generator bolts. Connect the battery ground cable. Adjust the drive belt tension to specification. Refer to Section 03-05.
17. If so equipped, connect the air conditioning lines to the A/C compressor.
18. Install the radiator. Refer to Section 03-03. Connect the upper radiator hose and lower radiator hose. Connect the transmission oil cooler lines, if so equipped. Install the fan shroud.
19. If so equipped, install the A/C condenser core to the radiator. Refer to Section 12-03A in the Body, Chassis Manual.
20. Perform all fuel charging system post-service procedures. Refer to Section 03-04B.
21. Connect the heater hoses to the water pump and intake manifold. Fill and bleed the cooling system. Refer to Section 03-03. Fill the crankcase with the proper grade and quantity of oil. Connect the booster vacuum hose, if so equipped.
22. Operate the engine at fast idle and check all gaskets and hose connections for leaks.
23. Install the engine air cleaner and air cleaner outlet tube assembly. Connect the crankcase ventilation hose to the engine air cleaner.
24. Install the fuel vapor return hose and valve assembly to the positive crankcase ventilation valve and connect the fuel vapor return valve to the wiring harness connector.
25. Install the engine air cleaner hot air tube and connect the secondary air injection silencer inlet hose.
26. Install the air cleaner outlet tube to the throttle body and upper intake manifold.
27. Connect the secondary air injection manifold tube to the right-hand side of the engine air cleaner.
28. Evacuate and charge the air conditioning system, if so equipped. Refer to Section 12-00 in the Body, Chassis Manual.
29. Install hood.

Camshaft Bearings

Camshaft bearings (6261) are available prefinished to size for standard and undersize journal diameters.

SPECIAL SERVICE TOOL(S) REQUIRED

Description	Tool Number
Camshaft Bearing Set	T65L-6250-A

REMOVAL AND INSTALLATION (Continued)

Removal

Camshaft Bearings

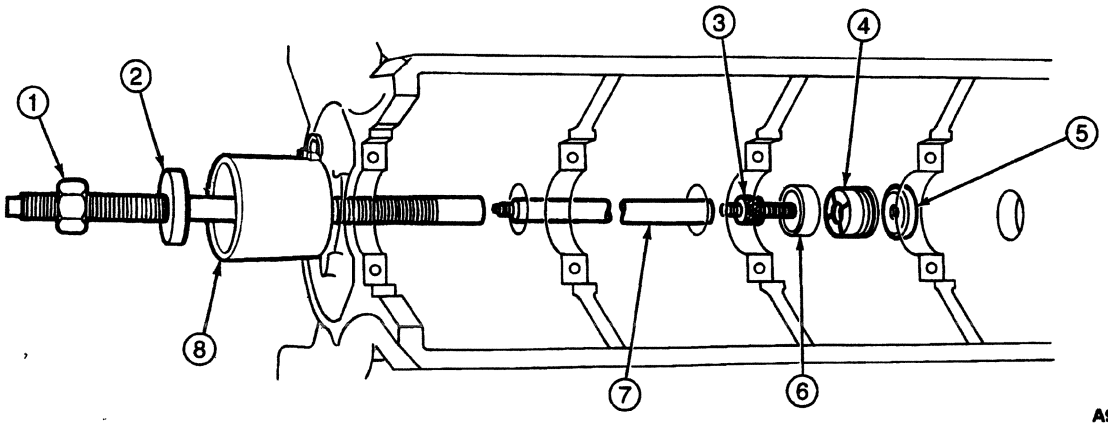

A9045-D

Item	Part Number	Description
1	—	Pulling Screw (Part of T65L-6250-A)
2	—	Pulling Plate (Part of T65L-6250-A)
3	—	Expanding Mandrel (Part of T65L-6250-A)
4	—	Expanding Collet (Part of T65L-6250-A)
5	—	Backup Nut (Part of T65L-6250-A)

Item	Part Number	Description
6	6262	Bearing, Camshaft (Part Number Given Is for Reference Only)
7	—	Puller Screw Extension (Part of T65L-6250-A)
8	—	Front Spacer (Part of T65L-6250-A) NOTE: All Items Except No. 6 (Bearing) Are Included in Camshaft Bearing Set T65L-6250-A.

(Continued)

1. With engine (6007) removed and placed in a work stand, remove the camshaft (6250) crankshaft, and flywheel (6375). Refer to Camshaft and to Flywheel in the In-Vehicle Service portion of this section. Push pistons to top of cylinders.
2. Remove the camshaft rear bearing cover (6266). Refer to Engine Block Plugs service procedure in Section 03-00.
3. Using Camshaft Bearing Set T65L-6250-A, select the proper size expanding collet and backup nut and assemble onto expanding mandrel. With the expanding collet collapsed, install the collet in the camshaft bearing. Tighten backup nut on expanding mandrel until collet fits camshaft bearing.
4. Assemble the puller screw and extension (if necessary), as shown, and install on expanding mandrel. Wrap a cloth around threads of the puller screw to protect the front camshaft bearing or journal. Tighten pulling nut against the thrust bearing and pulling plate to remove camshaft bearing. Hold a wrench on the end of puller screw to prevent it from turning.
5. Repeat the procedure for each camshaft bearing. To remove the front camshaft bearing, install puller screw from rear of cylinder blocks (6010).

REMOVAL AND INSTALLATION (Continued)

Installation

1. **CAUTION: Failure to use correct expanding collet can cause severe bearing damage. Align oil holes in camshaft bearings with oil holes in cylinder blocks before pressing them into block. Be sure front camshaft bearing is installed 1.0-1.5 mm (0.040-0.060 inch) below front face of cylinder blocks.**

   Position new camshaft bearings at bearing bores, and press in place with the tool. Be sure to center the pulling plate and puller screw to avoid bearing damage.

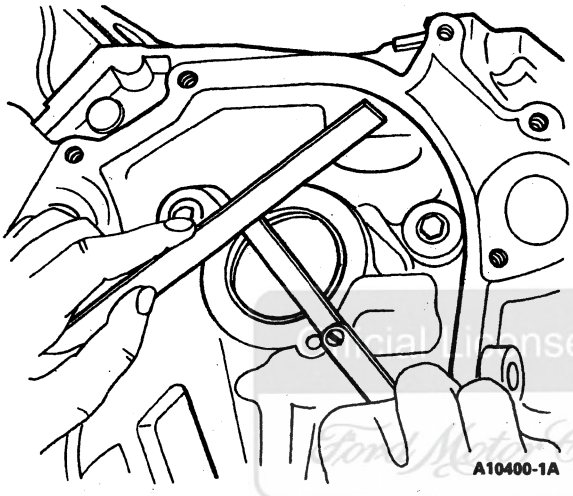

2. Install a new camshaft rear bearing cover. Refer to Engine Block Plugs service procedure in Section 03-00.
3. Install camshaft, crankshaft (6303), and flywheel. Refer to Camshaft and to Flywheel in the In-Vehicle Service portion of this section.
4. Position piston and connecting rod on crankshaft. Tighten connecting rod nuts to 61-68 N·m (45-50 lb-ft).
5. Install engine into vehicle. Refer to Engine in the Removal and Installation portion of this section.

Crankshaft

SPECIAL SERVICE TOOL(S) REQUIRED

Description	Tool Number
Spark Plug Wire Remover	T74P-6666-A
Crankshaft Damper Remover	T58P-6316-D

Removal

1. Remove the engine (6007) and install it on a work stand.
2. Disconnect the distributor to spark plug wires (12286) from the spark plugs (12405) using Spark Plug Wire Remover T74P-6666-A. Remove the spark plugs to allow easy rotation of crankshaft (6303).
3. Remove the oil bypass filter (6714). Slide water pump bypass clamp toward the water pump (8501).
4. Remove the crankshaft pulley (6312) from the crankshaft vibration damper (6316).
5. Remove the bolt and washer from the end of the crankshaft. Install Crankshaft Damper Remover T58P-6316-D or Rotunda Gear and Pulley Puller 014-00293 or equivalent on the crankshaft vibration damper and remove crankshaft vibration damper. Remove Woodruff key.

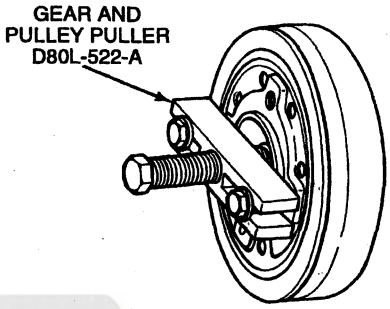

6. Slide crankshaft damper spacer off crankshaft.
7. Remove the engine front cover (6019) and water pump as an assembly. Check the timing chain deflection. Refer to Section 03-00. Remove the timing chain, camshaft sprocket (6256) and crankshaft sprocket (6306). Refer to Timing Chain and Sprockets in the In-Vehicle Service portion of this section.
8. Invert the engine on a work stand. Remove the flywheel (6375) and the engine rear plate (7007). Remove the oil pan (6675) and oil pan gasket (6710). Remove the oil pump (6600).
9. NOTE: Make sure all bearing caps (crankshaft main and connecting rod) are marked for installation into their original locations.

   Turn the crankshaft until the connecting rod (6200) from which connecting rod bearing cap is being removed is up, then remove the connecting rod bearing cap. Push the connecting rod and piston (6108) assembly down into the cylinder. Repeat this procedure until all connecting rod bearing caps are removed.
10. Remove the crankshaft main bearing caps.
11. **CAUTION: Handle the crankshaft with care to avoid possible fracture or damage to finished surfaces.**

    Carefully lift the crankshaft out of the cylinder blocks (6010) so thrust bearing surfaces are not damaged.
12. Refer to Section 03-00 for cleaning and inspection procedures. Clean the crankshaft vibration damper.
13. To refinish journals and dress minor imperfections refer to Section 03-00.

Ford Motor Company Official Licensed Product

REMOVAL AND INSTALLATION (Continued)

Crankshaft Assembly

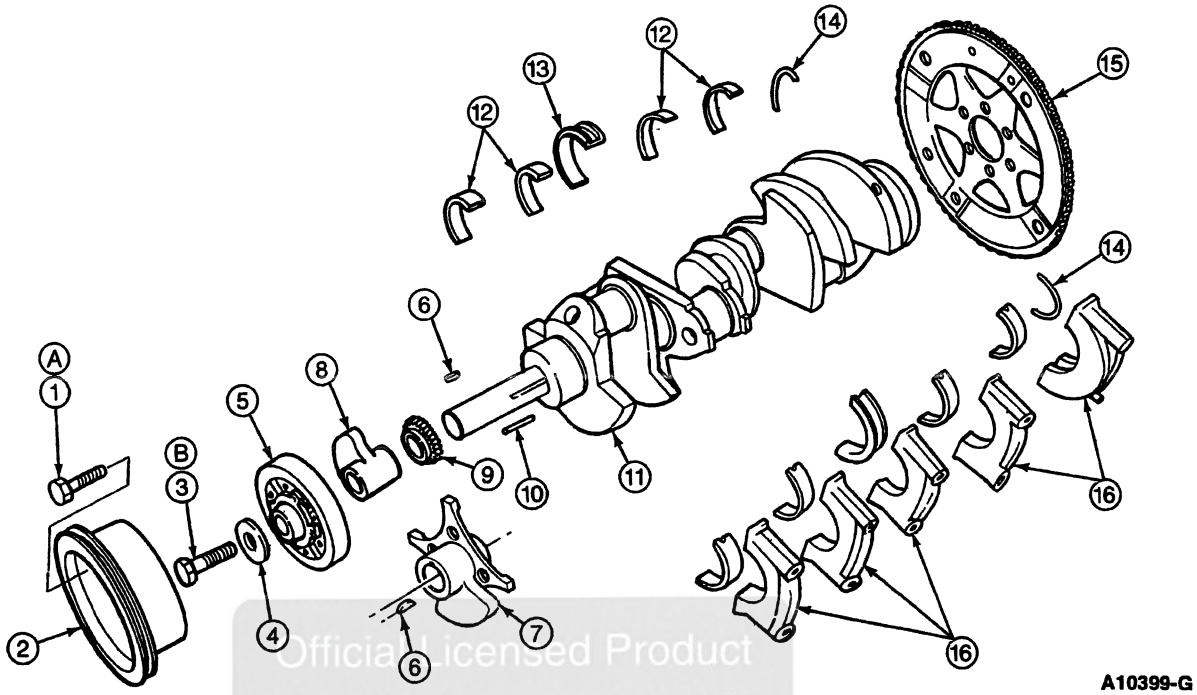

Item	Part Number	Description
1	42998-S8	Bolt
2	6312	Crankshaft Pulley
3	376706-S	Bolt
4	6378	Washer
5	6316	Crankshaft Vibration Damper
6	74151-S	Key
7	6M265	Spacer / Trigger Wheel
8	6359	Crankshaft Damper Hub
9	6306	Crankshaft Sprocket
10	388907-S	Key

(Continued)

Item	Part Number	Description
11	6303	Crankshaft
12	6333	Crankshaft Main Bearing
13	6337	Crankshaft Thrust Main Bearing
14	6701	Crankshaft Rear Oil Seal (Upper and Lower Halves)
15	6375	Flywheel
16	—	Crankshaft Main Bearing Caps (Part of 6010)
A	—	Tighten to 54-71 N·m (40-53 Lb-Ft)
B	—	Tighten to 95-122 N·m (70-90 Lb-Ft)

Installation

1. Remove the crankshaft rear oil seal (6701) from cylinder blocks and rear crankshaft main bearing cap.
2. Remove the crankshaft main bearings (6333) from the cylinder blocks and crankshaft main bearing caps.
3. Remove the connecting rod bearings (6211) from the connecting rods and connecting rod bearing caps.

REMOVAL AND INSTALLATION (Continued)

4. NOTE: If the original crankshaft main bearings and crankshaft thrust main bearings (6337) are to be reused, all crankshaft main bearings and crankshaft thrust main bearings should be marked for installation into their original locations.

   If the crankshaft main bearing journals have been refinished to a definite undersize, install the correct undersize crankshaft main bearing and crankshaft thrust main bearing. Make sure crankshaft main bearings and crankshaft thrust main bearings and bearing bores are clean. Foreign material under crankshaft main bearings and crankshaft thrust main bearings will distort the crankshaft main bearings and crankshaft thrust main bearings and cause failure.

5. **CAUTION: The oil holes in the upper half of the crankshaft main bearings and crankshaft thrust main bearings must be aligned with the oil holes in the cylinder blocks.**

   Place the upper half of the crankshaft main bearings and crankshaft thrust main bearings in the bores with tang in slot.

6. Install lower half of the crankshaft main bearings and crankshaft thrust main bearings in crankshaft main bearing caps.
7. Clean the rear journal oil seal groove and mating surfaces of the cylinder blocks and rear crankshaft main bearing cap.
8. Install a new crankshaft rear oil seal in the cylinder blocks and rear crankshaft main bearing cap. Refer to Crankshaft Rear Oil Seal in the In-Vehicle Service portion of this section.
9. **CAUTION: Be careful not to damage crankshaft main bearing and crankshaft thrust main bearing surfaces.**

   Carefully lower the crankshaft into place.

10. Check the clearance of each crankshaft main bearing and crankshaft thrust main bearing with Plastigage ® or equivalent. Refer to Section 03-00.
11. After crankshaft main bearings and crankshaft thrust main bearings have been fitted, apply light coat of specified engine oil to journals and crankshaft main bearings and crankshaft thrust main bearings. Install all crankshaft main bearing caps except thrust bearing cap No. 3. Make sure crankshaft main bearing caps are installed in original locations. Tighten the bearing cap bolts to 129-142 N·m (95-105 lb-ft).
12. Install the crankshaft thrust main bearing cap with bolts finger-tight.
13. Pry the crankshaft forward against thrust surface of upper half of crankshaft thrust main bearing.
14. Hold crankshaft forward and pry thrust bearing cap to rear. This aligns the rear thrust surfaces of both halves of crankshaft thrust main bearing.

Tightening Crankshaft Thrust Main Bearing Cap

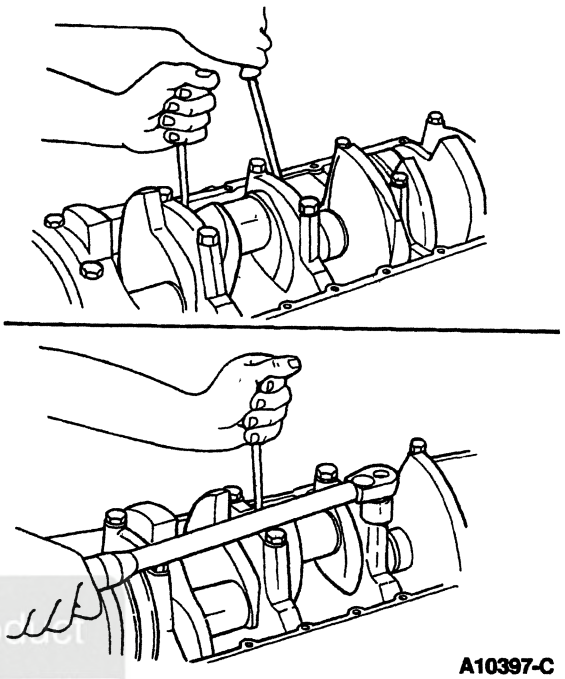

A10397-C

15. Retain forward pressure on the crankshaft. Tighten crankshaft main bearing cap bolts to 129-142 N·m (95-105 lb-ft).
16. Force the crankshaft toward the rear of engine.
17. Check the crankshaft end play. Refer to Section 03-00.
18. Install new connecting rod bearings in the connecting rods and connecting rod bearing caps. Check clearance of each connecting rod bearing with Plastigage® or equivalent. Refer to Section 03-00. Also, refer to Specifications in this section.
19. After the connecting rod bearings have been fitted, apply light coat of specified engine oil to journals and connecting rod bearings.
20. Install the connecting rod bearing cap. Make sure connecting rod bolt heads are properly seated in connecting rod. Tighten nuts to 61-68 N·m (45-50 lb-ft).
21. After piston and connecting rod assemblies have been installed, check side clearance between connecting rods on each crankshaft journal. Refer to Specifications in this section.
22. Install timing chain, camshaft sprocket and crankshaft sprocket, crankshaft damper spacer, engine front cover and crankshaft vibration damper. Refer to Timing Chain and Sprockets in the In-Vehicle Service portion of this section.
23. Install the engine rear plate. Position flywheel on crankshaft flange. Install and tighten the bolts to 103-115 N·m (75-85 lb-ft).

Official Licensed Product Ford Motor Company

REMOVAL AND INSTALLATION (Continued)

24. Clean the oil pan, oil pump and oil pump screen cover and tube (6622). Prime the oil pump by filling inlet port with engine oil and rotating oil pump intermediate shaft (6A618) to distribute oil within oil pump housing. Install oil pump and oil pan. Refer to Oil Pan / Oil Pump Screen Cover and Tube in the In-Vehicle Service portion of this section.
25. Install the oil bypass filter.
26. Install the spark plugs and connect the distributor to spark plug wires.
27. Install the engine in vehicle. Refer to Engine in the Removal and Installation portion of this section.

DISASSEMBLY AND ASSEMBLY

Engine

When installing nuts or bolts that must be tightened, oil the threads with light engine oil. Refer to Specifications in this section for proper torque values. Do not oil threads requiring oil-resistant or water-resistant sealer.

Subassemblies

Cylinder Head

SPECIAL SERVICE TOOL(S) REQUIRED

Description	Tool Number
Valve Spring Compressor	T70P-6049-A

Disassembly

1. With cylinder head (6049) removed from engine (6007), remove rocker arm seat bolts, rocker arm seats (6A528) and rocker arms (6564). Remove left and right exhaust manifolds (9430) and spark plugs (12405).
2. Clean carbon from combustion chambers before removing intake valves (6507) and exhaust valves (6505).
3. Compress valve springs (6513)using Valve Spring Compressor T70P-6049-A. Remove valve spring retainer key (6518) and release valve springs. Remove valve spring retainers (6514), valve springs, valve stem seals (6571), and intake valves and exhaust valves. Discard valve stem seals.
4. Clean and inspect cylinder head(s) and related components. Refer to Section 03-00.
5. Refer to Section 03-00 for cylinder head and valve repair procedures.

Assembly

1. NOTE: Lubricate all valve stems and valve guides with specified engine oil. Apply Ford Multi-Purpose Grease DOAZ-19584-AA or equivalent meeting Ford specification ESB-M1C93-B to the valve tips before installation.

   NOTE: Make sure the proper seal application for intake and exhaust are in place.

   Install each intake valve and exhaust valve in the port from which it was removed or to which it was fitted. Install new valve stem seal on each intake valve and exhaust valve.
2. Set valve spring and valve spring retainer over valve stem. Compress valve spring and install valve spring retainer keys.
3. **CAUTION: Reducing assembled height below specifications can cause spring breakage and rapid wear of camshaft lobe.**

   With dividers, measure assembled height of valve spring from surface of spring pad on cylinder head to underside of valve spring retainer. Check dividers with accurate scale. If assembled height exceeds specification, install shim(s) below valve spring to reduce height to recommended dimension. Refer to Specifications in this section.

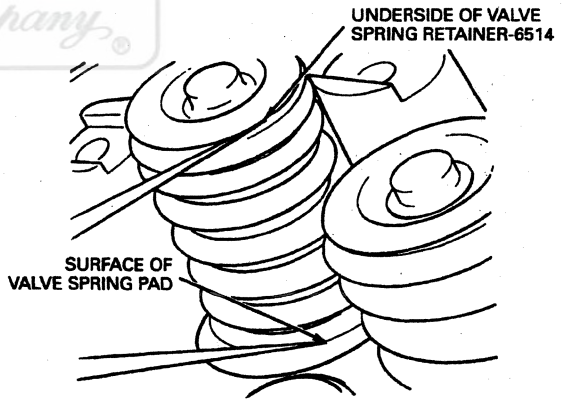

A10401-B

4. Coat the rocker arm seats and sockets with Ford Multi-Purpose Grease DOAZ-19584-AA or equivalent meeting Ford specification ESB-M1C93-B. Make sure the rocker arm seat bolts are in a serviceable condition before installing them. Install rocker arms, rocker arm seats and rocker arm seat bolts. Refer to Rocker Arm in the In-Vehicle Service portion of this section.
5. Install left and right exhaust manifolds and spark plugs.

Official Licensed Product
Ford Motor Company

DISASSEMBLY AND ASSEMBLY (Continued)

Pistons, Piston Pins and Rings

SPECIAL SERVICE TOOL(S) REQUIRED

Description	Tool Number
Piston Pin Remover/Replacer	T68P-6135-A

Disassembly

1. Remove the connecting rod bearing (6211) from the connecting rod (6200) and connecting rod bearing cap.
2. Mark the pistons (6108) to make sure they are assembled with same connecting rod and installed in the same cylinders from which they were removed.
3. Using an arbor press and Piston Pin Remover/Replacer T68P-6135-A, press the piston pin (6135) from the piston and connecting rod. Remove the partial piston ring set (6148).
4. Refer to Section 03-00 for cleaning and inspection procedures. Repair if required.

Piston and Connecting Rod

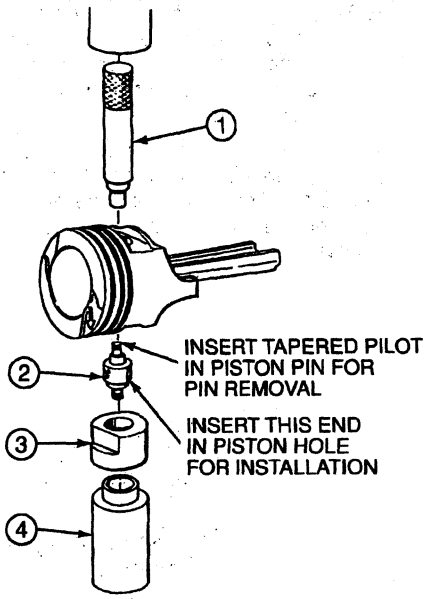

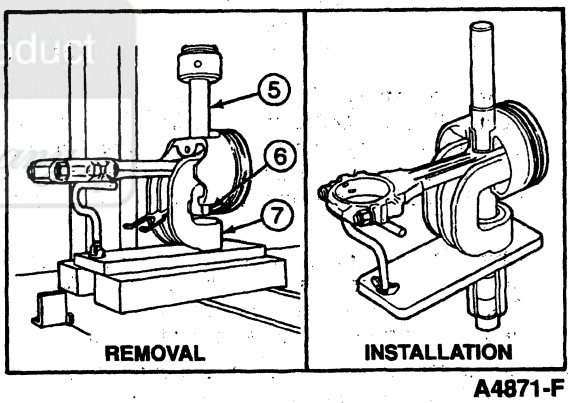

A4871-F

Item	Part Number	Description
1	—	Driver (Part of T68P-6135-A)
2	—	Locator (Part of T68P-6135-A)
3	—	Adapter (Part of T68P-6135-A)
4	—	Cup (Part of T68P-6135-A)
5	—	Pin Pusher (Part of T68P-6135-A)
6	6135	Piston Pin
7	—	Receiving Tube (Part of T68P-6135-A)

Official Licensed Product
Ford Motor Company

DISASSEMBLY AND ASSEMBLY (Continued)

Assembly

1. NOTE: Check the fit of a new piston in the cylinder bore before assembling piston and piston pin to connecting rod. Piston pin bore of connecting rod and diameter of piston pin must be within specifications.

   Apply a light coat of specified engine oil to all parts. Assemble the piston to the connecting rod with the cylinder number side of the connecting rod and indentation notch in piston positioned as shown.

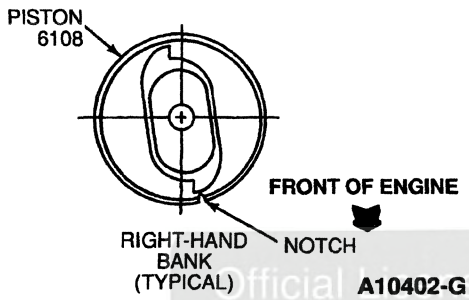

2. Start the piston pin in the piston and the connecting rod. Using an arbor press, press the piston pin through the piston and connecting rod until the end of piston pin is 1.59-3.18 mm (1/16-1/8 inch) below chamfer of the piston pin bore in the piston.
3. Check the end gap of each ring in partial piston ring set. End gap must be within specifications. Follow the instructions contained on piston ring package and install the partial piston ring set.
4. Check the ring-side clearance of compression rings with a feeler gauge inserted between the ring and the lower land. Feeler gauge should slide freely around the ring circumference without binding. Any wear will form a step at the inner portion of the lower land. If the lower lands have high steps, replace the piston.
5. Make sure the connecting rod bearing and connecting rod bearing bore in the connecting rod and connecting rod bearing cap are clean. Foreign material under the connecting rod bearing will distort the connecting rod bearing and cause failure. Install connecting rod bearing in connecting rod and connecting rod bearing cap with tangs fitting in slots provided.

Valve Tappet, Hydraulic

Each valve tappet (6500) is a matched assembly. If parts of one are mixed with those of another, improper valve operation may result. Disassemble and assemble each valve tappet separately. Valve tappets should be tested after assembly. Refer to Section 03-00. Keep the valve tappets in proper sequence so they can be installed in their original bores.

Disassembly

1. Grasp the lock ring with needlenose pliers to release it from the groove. It may be necessary to depress the plunger to fully release lock ring.
2. Remove the push rod cup, metering valve disc and plunger assembly.
3. Carefully remove the plunger spring, check valve spring, check valve retainer and check valve from the plunger.
4. Refer to Section 03-00 for cleaning and inspection procedures.

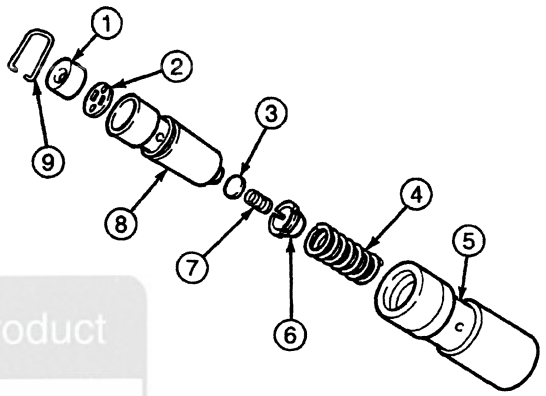

Item	Part Number	Description
1	—	Push Rod Cup (Part of 6500)
2	—	Metering Valve Disc (Part of 6500)
3	—	Check Valve (Part of 6500)
4	—	Plunger Spring (Part of 6500)
5	—	Body (Part of 6500)
6	—	Check Valve Retainer (Part of 6500)
7	—	Check Valve Spring (Part of 6500)
8	—	Plunger (Part of 6500)
9	—	Lock Ring (Part of 6500)

Assembly

1. Place the plunger upside down on a clean work bench.
2. Place the check valve (disc or ball check) in position over the oil hole on the bottom of the plunger. Set the check valve spring on top of the check valve (disc or ball check).
3. Position the check valve retainer over the check valve and spring. Then, push the retainer down into place on the plunger.
4. Place the plunger spring and the plunger (open end up) into tappet body.

Official Licensed Product Ford Motor Company

DISASSEMBLY AND ASSEMBLY (Continued)

5. Position the metering valve disc in the plunger, and place push rod cup in the plunger.
6. Depress the plunger and position the closed end of lock ring in the groove of the tappet body. With the plunger still depressed, position the open ends of lock ring in the groove. Release the plunger, and then depress it again to fully seat the lock ring.
7. Use Hydraulic Tappet Leak-Down Tester TOOL-6500-E or equivalent to fill the valve tappet with test fluid. Refer to Section 03-00.

Cylinder Block Assembly

Disassembly

1. Mount the engine on a work stand and remove all the parts not furnished with the new engine short block (6009).
2. Remove the four cylinder head to block dowels (6A008) and the block drain plugs.
3 Remove the old engine short block assembly from the work stand.

Assembly

1. Clean the gasket and seal surfaces of all serviceable parts and assemblies.
2. Position the new engine short block assembly on a work stand and install the cylinder head to block dowels and block drain plugs.
3. Transfer all serviceable parts removed from the old engine short block.
4. Check all assembly clearances. Refer to Specifications in this section. Correct as necessary.

Cylinder Block, Bare

Before replacing a cylinder blocks (6010), determine if it is repairable. If so, make the necessary repairs. Refer to Section 03-00.

Disassembly

1. Mount the old engine in a work stand and completely disassemble.
2. Make sure that cylinder bores are ridge-reamed before removing piston and connecting rod, if required.
3. Remove the cylinder head to block dowels and the block drain plugs.

Assembly

1. Clean the gasket and seal surfaces of all serviceable parts and assemblies.
2. Position the new cylinder blocks in a work stand and install the cylinder head to block dowels and the block drain plugs.
3. Transfer all serviceable parts removed from the old cylinder blocks.
4. Check all assembly clearances. Refer to Specifications in this section. Correct as necessary.

ADJUSTMENTS

Valve Clearance

SPECIAL SERVICE TOOL(S) REQUIRED

Description	Tool Number
Tappet Bleed Down Wrench	T71P-6513-B

The valve arrangement on the left bank is E-I-E-I-E-I-E-I and on the right bank is I-E-I-E-I-E-I-E.

A 1.52-mm (0.060-inch) shorter push rod (6565) or a 1.52-mm (0.060-inch) longer push rod is available for service to provide a means of compensating for dimensional changes in the valve mechanism. Refer to the Master Parts List for the pertinent color code.

Valve stem-to-valve rocker arm clearance should be within specifications. Refer to Specifications in this section. With the hydraulic valve tappet (6500) completely collapsed, repeated valve reconditioning operations (valve or valve seat refacing) will decrease the clearance to the point that if not compensated for, the hydraulic valve tappet will cease to function and the intake valve (6507) or exhaust valve (6505) will be held open.

The use of a positive stop rocker arm seat bolt eliminates the need for valve clearance adjustment. However, to obtain accurate valve clearance measurements, it is important that all components be serviceable and installed to specification.

To determine whether a shorter or a longer push rod is necessary, perform the following check:

1. Install an auxiliary starter switch. Crank the engine (6007) with the key off until the No. 1 piston (6108) is on TDC after the compression stroke.

ADJUSTMENTS (Continued)

2. With the crankshaft (6303) in the positions designated in the following Steps 3, 4 and 5, position the hydraulic tappet compressor Tappet Bleed Down Wrench T71P-6513-B on the rocker arm (6564). Slowly apply pressure to bleed down the hydraulic valve tappet until the plunger is completely bottomed. Hold the valve tappet in this position and check the available clearance between the rocker arm and the valve stem tip with a feeler gauge. If the clearance is less than specifications, install a shorter push rod. If the clearance is greater than specifications, install a longer push rod.

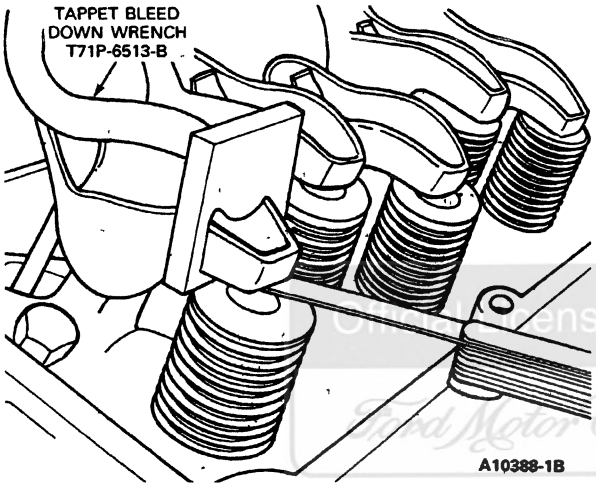

3. With the No. 1 piston at TDC at the end of the compression stroke (Position No. 1), check clearances on the following valves:
   - No. 1 Intake No. 1 Exhaust
   - No. 3 Intake No. 4 Exhaust
   - No. 7 Intake No. 5 Exhaust
   - No. 8 Intake No. 8 Exhaust

4. After checking the clearance on these intake valves and exhaust valves, rotate the crankshaft 360 degrees to Position No. 2, then check the following valves:
   - No. 2 Intake No. 2 Exhaust
   - No. 4 Intake No. 3 Exhaust
   - No. 5 Intake No. 6 Exhaust
   - No. 6 Intake No. 7 Exhaust

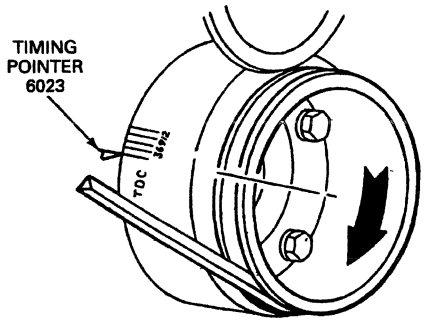

POSITION 1 – NO 1 AT TDC AT END OF COMPRESSION STROKE.
POSITION 2 – ROTATE THE CRANKSHAFT 360 DEGREES (ONE REVOLUTION) CLOCKWISE FROM POSITION 1.

Unlicensed Product
Ford Motor Company

SPECIFICATIONS

GENERAL SPECIFICATIONS

Bore and Stroke	Firing Order	Oil Pressure Hot @ 2000 rpm kPa (psi)	Engine Type and Number of Cylinder
4 36 x 3 85	15426378	276-606 (40-88)	O H.V. V-8

SPECIFICATIONS (Continued)

CYLINDER HEAD AND VALVE TRAIN

Combustion Chamber Volume C.C.[b]	Valve Guide Bore Diameter		Valve Seal Width[a]		Valve Seat Runout TIR Maximum	Valve Arrangement Front to Rear	Gasket Surface Flatness[c]
	Intake	Exhaust	Intake	Exhaust			
89.5-92.5	0.3433-0.3443	0.3433-0.3443	0.060-0.080	0.060-0.080	0.002	RT I-E-I-E-I-E-I-E LT E-I-E-I-E-I-E-I	0.003 in Any 6 In. 0.006 Overall

a Valve seat angle — 45°.
b Compression pressure (psi) of the lowest cylinder must be at least 75% of the highest to be within specification.
c Gasket surface finish — RMS 60-150.

CYLINDER HEAD AND VALVE TRAIN (Continued)

Rocker Arm Lift Ratio to 1	Push Rod Runout TIR Maximum	Valve Tappet or Lifter			Collapsed Tappet Gap (Clearance)	
		Standard Diameter	Clearance to Bore[a]	Hydraulic Lifter Leak-Down Rate[b]	Allowable	Desired
1.73	0.015	0.8740-0.8745	0.0007-0.0027	10 to 50 Seconds for 1/16 Travel	0.075-0.175	0.100-0.150

a Service limit — 0.005.
b Time required for plunger to leak-down 0.0625 in. under load of 50 lbs. using leak-down fluid in tappet.

Ford Motor Company

CYLINDER HEAD AND VALVE TRAIN (Continued)

Valve Spring Compression Pressure Lbs. @ Specified Height		Valve Spring Free Length (Approximate)		Valve Spring Assembled Height		Valve Spring Out of Square Maximum
Intake[a]	Exhaust	Intake	Exhaust	Intake	Exhaust	
76-84@ 1.81 218-240 @ 1.33	76-84 @ 1.81 218-240 @ 1.33	2.06	2.06	1.78-1.84	1.78-1.84	5/64 (0.078)

a Service limit — 10% loss of pressure.

CYLINDER HEAD AND VALVE TRAIN (Continued)

Valve Stem to Guide Clearance[a]		Valve Head Diameter[b]		Valve Face Runout TIR Maximum
Intake	Exhaust	Intake	Exhaust	
0.0010-0.0027	0.0010-0.0027	2.075-2.090	1.646-1.661	0.002

a Service clearance — 0.0065.
b Valve face angle — 44°.

CYLINDER HEAD AND VALVE TRAIN (Continued)

Standard		Valve Stem Diameter 0.015 Oversize		0.030 Oversize	
Intake	Exhaust	Intake	Exhaust	Intake	Exhaust
0.3415-0.3423	0.3415-0.3423	0.3565-0.3573	0.3565-0.3573	0.3715-0.3723	0.3715-0.3723

CAMSHAFT

Lobe Lift[a]		Camshaft End Play		Camshaft Journal to Bearing Clearance[b]
Intake	Exhaust	End Play	Service Limit	
0.252	0.278	0.001-0.006	0.009	0.001-0.003

a Maximum allowable lift loss — 0.005.
b Service limit — 0.006.

SPECIFICATIONS (Continued)

CAMSHAFT DRIVE

Camshaft Journal Diameter — Standard[a]					Camshaft Bearing Inside Diameter						
No. 1	No. 2	No. 3	No. 4	No. 5	No. 1	No. 2	No. 3	No. 4	No. 5	Camshaft Front Bearing Location[b]	Timing Chain Deflection Inches Maximum
2.1238-2.1248	2.1238-2.1248	2.1238-2.1248	2.1238-2.1248	2.1238-2.1248	2.1258-2.1268	2.1258-2.1268	2.1258-2.1268	2.1258-2.1268	2.1258-2.1268	0.040-0.060	0.500

a Camshaft journal runout — 0.005 TIR maximum.
b Distance in inches that front edge of the bearing is installed below the front face of the cylinder block.

CYLINDER BLOCK

Cylinder Bore Diameter[a]	Main Bearing Bore Diameter	Distributor Shaft Bearing Bore Diameter	Head Gasket Surface Flatness	Head Gasket Surface Finish	Tappet Bore Diameter
4.3600-4.3636	3.1922-3.1934	0.5160-0.5175	0.003 in Any 6 In. 0.006 Overall	RMS 90-150	0.8752-0.8767

a Maximum out-of-round — 0.0015, service limit — 0.005, maximum taper service limit — 0.010, cylinder bore surface finish RMS 18-38, Bore taper service limit — 0.010.

CRANKSHAFT AND FLYWHEEL

Main Bearing Journal Diameter[a]	Main Bearing Journal Runout TIR Maximum[b]	Main Bearing Thrust Face Runout TIR Maximum	Main Bearing Journal Taper Maximum Per Inch	Thrust Bearing Journal Length	Main and Rod Bearing Journal Finish RMS Maximum	Main Bearing Thrust Face Finish RMS Maximum
2.9994-3.0002	0.002	0.001	0.0005	1.124-1.126	12	25 Front — 23 Rear

a Maximum out-of-round — 0.0006.
b Service limit — 0.005.

Ford Motor Company

CRANKSHAFT AND FLYWHEEL (Continued)

Connecting Rod Journal Diameter[a]	Connecting Rod Journal Taper Per Inch Maximum	Crankshaft Free End Play[b]
2.4992-2.5000	0.0006	0.004-0.008

a Maximum out-of-round — 0.0006.
b Service limit — 0.012.

CRANKSHAFT AND FLYWHEEL (Continued)

Connecting Rod Bearing to Crankshaft Clearance Selective Fit			Main Bearing to Crankshaft Clearance Selective Fit		
Desired	Allowable	Bearing Wall Thickness Std.[a]	Desired	Allowable	Bearing Wall Thickness Std.[a]
0.0008-0.0015	0.0008-0.0025	0.0757-0.0762	Main Bearing Cap 2, 3, 4, 5: 0.0009-0.0027 Main Bearing Cap: 1 0.0004-0.0022	Main Bearing Cap 2, 3, 4, 5: 0.0009-0.0027 Main Bearing Cap: 1 0.0004-0.0022	0.0955-0.0960

a For 0.002 undersize add 0.001 to standard wall thickness.

CONNECTING ROD, PISTON AND RINGS

Piston Pin Bore or Bushing I.D.	Rod Bearing Bore I.D.[a]	Rod Length Center of Center	Connecting Rod Alignment Maximum Total Difference		Rod to Crankshaft Assembled Side Clearance[c]
			Twist[b]	Bend[b]	
1.0386-1.0393	2.6522-2.6530	6.6035-6.6065	0.024	0.012	0.010-0.020

a Connecting rod bearing bore maximum out-of-round — 0.0004.
b Pin bushing and crankshaft bore must be parallel and in same vertical plane within specified total difference when measured at the ends of an 8-inch long bar, 4 inches on each side of rod centerline.
c Service limit — 0.023.

SPECIFICATIONS (Continued)

CONNECTING ROD, PISTON AND RINGS (Continued)

Length	Diameter		To Piston Pin Bore Clearance[a]	To Connecting Rod Bushing Clearance
	Standard	.001 Oversize		
3.290-3.310	1.0398-1.0403	1.0410-1.0413	0.0002-0.0005	Interference Fit

a Selective Fit.

CONNECTING ROD, PISTON AND RINGS (Continued)

Ring Width		Side Clearance[a]			Ring Gap		
Compression		Compression			Compression (In Gauge)		
Top	Bottom	Top	Bottom	Oil	Top	Bottom	Oil
0.0773-0.0783	0.0773-0.0783	0.0012-0.0022	0.0012-0.0022	Snug	0.010-0.015	0.011-0.021	0.010-0.030

a Service limit — 0.002 maximum increase in clearance.

PISTON

Diameter[a]			Piston to Bore Clearance Selective Fit	Piston Pin Bore Diameter	Ring Groove Width Compression		
Coded Red	Coded Blue	.003 Oversize			Top	Bottom	Oil
4.3585-4.3595	4.3595-4.3605	4.3605-4.3615	0.0014-0.0022	1.0401-1.0406	0.0795-0.0805	0.0795-0.0805	0.1586-0.1596

a Measured at the piston pin bore centerline at 90° to the pin.

Official Licensed Product Ford Motor Company

PISTON (Continued)

Piston Bore Diameter	I.D. Code of Service Piston Required
110.744-110.774 mm (4.3600-4.3612 In.)	Red
110.774-110.805 mm (4.3612-4.3624 In.)	Blue
110.805-110.835 mm (4.3624-4.3636 In.)	Yellow

When replacing pistons, measure cylinder bore. Refer to Section 03-00. Install service piston matched in piston bore diameter above.

LUBRICATION SYSTEM

Relief Valve Spring Pressure Lbs. @ Specified Length	Driveshaft to Housing Clearance	Relief Valve to Housing Clearance	Rotor Assembly End Clearance	Outer Race to Housing Clearance	Engine Oil Capacity[a]			Inner to Outer Rotor Tip Clearance
					U.S. Qts.	Imperial Qts.	Liters	
20.6-22.6 @ 2.49	0.0015-0.0030	0.0015-0.0030	0.004 Maximum	0.001-0.013	5	4.2	4.7	0.012

a Add 1 U.S. quart (or equivalent in Imperial quarts or liters) when replacing filter.

DRIVE BELT TENSION

Tensioning Method	Belt Type	New Belt Tension (0 Min. Operation)	Used Belt Tension (Greater Than 5 Min. Operation)	Min. Tension After 5 Min. Operation
(A/C and P/S Belt) Automatic	6K Poly-V Belt	Tension OK If Tensioner Within Indicator Marks. 418 N (94 Lb.) Min.	Same As New	Same As New
(Alt and Air Pump Belt) Manual	6K Poly-V Belt	711-889 N (160-200 Lb.)	489-578 N (110-130 Lb.)	467 N (105 Lb.)

SPECIFICATIONS (Continued)

TORQUE SPECIFICATIONS

Description	N·m	Lb-Ft	Lb-In
Frame Bracket Attaching Bolt Lock Nuts	58-77	43-56	—
Nut, Insulator-to-Support Mounting Bracket (F-250, F-350 and F-Super Duty)	109-149	80-109	—
Insulator-to-Engine Bolts	81-109	60-80	—
Insulator-to-Support Bracket Nuts (F-Super Duty Motorhome Chassis)	96-127	71-94	—
Nut and Washer Assembly, Insulator-to-Support Bracket (F-250, F-350 and F-Super Duty)	88-118	65-87	—
Nut, Support Bracket-to-Frame	58-77	43-57	—
Rocker Arm Seat Bolts	25-34	18-25	—
Cylinder Head Attaching Bolts — in Sequence:			
Step 1	95-108	70-80	—
Step 2	136-149	100-110	—
Step 3	176-189	130-140	—
Muffler Inlet Pipe Stud Nuts	34-49	25-36	—
Water Pump-to-Engine Front Cover Bolts	16-24	12-18	—
Camshaft Sprocket Capscrew	54-68	40-50	—
Engine Front Cover-to-Cylinder Block Attaching Screws	16-24	12-18	—
Engine Front Cover-to-Oil Pan Bolts	8-12	—	71-106
Crankshaft Vibration Damper-to-Crankshaft Attaching Bolt	95-122	70-90	—
Camshaft Thrust Plate-to-Cylinder Block Bolts	11-15	8-11	—
Flywheel-to-Crankshaft Mounting Bolts	103-115	75-85	—
Oil Pump-to-Cylinder Block Attaching Bolts, Nut	30-43	22-32	—
Oil Pump Screen Cover and Tube-to-Oil Pump Bolts	16-24	12-18	—
Oil Pump Screen Cover and Tube-to-Main Bearing Cap Nut	30-43	22-32	—
Oil Lever Indicator Tube Nut	13-24	10-18	—
Engine Rear Plate Bolts	54-75	40-55	—
Engine Lifting Eye Bolts	54-75	40-55	—
Oil Pan-to-Cylinder Block Attaching Bolts 1/4-20	11-16	8-11	—
Crankshaft Main Bearing Cap Bolts	129-142	95-105	—
Connecting Rod Bearing Cap Nuts	61-68	45-50	—
Exhaust Manifold Bolts and Studs	34-47	25-35	—
Lock Nut, Spark Plug Heat Shield	13-24	10-18	—

(Continued)

TORQUE SPECIFICATIONS (Cont'd)

Description	N·m	Lb-Ft	Lb-In
Bolt, 3/8-16 x 2.75, Exhaust	52-65	38-48	—
Crankshaft Pulley Bolts	54-71	40-53	—
Fan Blade-to-Fan Clutch Bolts	16-24	12-18	—
Alternator/Air Pump Bracket-to-Head Bolt (7/16 inch)	54-71	40-53	—
Fan Clutch-to-Water Pump Pulley	16-24	12-18	—
Generator/Air Pump Bracket-to-Head, Block and Water Pump Bolts (3/8 inch)	41-54	30-40	—
Generator Adjusting Arm Bolts	41-54	30-40	—
EGR Valve-to-Exhaust Manifold Tube	34-65	25-48	—
Generator Pivot Bolt	54-71	40-53	—
Generator Locking Bolt (Med. and Lg. Frame Alt.)	41-54	30-40	—
Generator Locking Bolt (Sm. Frame Alt.)	41-54	30-40	—
Air Pump Pivot Bolt/Idler Bracket Pivot Bolt	41-54	30-40	—
Air Pump Locking Bolt/Idler Bracket Locking Bolt	41-54	30-40	—
Non Air Pump Idler Torque	40-55	30-40	—
Air Pump Pulley Bolts	12-15	9-11	—
AC/PS Bracket-to-Water Pump Stud Nut	41-54	30-40	—
AC/PS Bracket-to-Head Bolts	54-71	40-53	—
PS Pump-to-Bracket Bolts	41-54	30-40	—
Drive Belt Tensioner Bolt	68-92	50-68	—
Exhaust Air Supply Manifold Lube Bolt	53-72	39-53	—
Valve and Bracket Assembly Exhaust Air Supply Bolt	19-25	14-18	—
Exhaust Air Supply Check Valve Lube Bolt	19-25	14-18	—
AC Compressor Bolts	24-31	18-23	—
AC Idler Bolts	24-31	18-23	—
Oil Gallery Plugs, 3/8-18	31-38	23-28	—
Valve Cover Bolts, 1/4-20	12-15	9-11	—
PCV Valve Body	13-26	10-19	—
Oil Filter Mounting Insert	61-203	45-150	—
Engine Oil Cooler Bolt	54-88	40-65	—
Engine Oil Cooler Hose Clamp	3-4	—	27-35
Radiator Lower Hose Clamp	1.6-2.8	—	14-24
Oil Pressure Sender	11-24	8-18	—
Spark Plug	7-14	—	62-124
Upper Intake Manifold-to-Lower Intake Manifold Bolts	16-24	12-18	—

(Continued)

SPECIFICATIONS (Continued)

TORQUE SPECIFICATIONS (Cont'd)

Description	N·m	Lb-Ft	Lb-In
Lower Intake Manifold-to-Cylinder Head Bolts and Nuts — In Sequence			
Step 1	11-16	8-11	—
Step 2	16-30	12-22	—
Step 3	30-47	22-35	—

TORQUE LIMITS

NOTE. All values are in N·m (lb-ft) unless otherwise noted. Oil threads with engine oil unless the threads require oil or water-resistant sealer. The standard torque limits listed below are applicable for all functions not listed in the special torque chart.

1/4-20	5/16-18	5/16-24	3/8-16	3/8-24	7/16-14	7/16-20	1/2-13	9/16-18
8-12 (6-9)	16-24 (12-18)	19-27 (14-20)	30-43 (22-32)	37-52 (27-38)	54-75 (40-55)	54-75 (40-55)	75-108 (55-80)	115-163 (85-120)

PIPE THREADS

1/8-27	1/4-18	3/8-18	1/2-14
7-11 (5-8)	11-16 (8-12)	16-24 (12-18)	16-24 (12-18)

LUBRICANT/ADHESIVE/CLEANER SPECIFICATIONS

Description	Part Number	Ford Specification
Multi-Purpose Grease	DOAZ-19584-AA	ESR-M1C159-A
Premium Long-Life Grease	XG-1-C or -K	ESA-M1C75-B
Gasket Maker	E2AZ-19562-B	WSK-M2G348-A5
Perfect Seal Sealing Compound	B5A-19554-A	ESE-M4G115-A
Pipe Sealant with Teflon®	D8AZ-19554-A	WSK-M2G350-A2
Metal Surface Cleaner	F4AZ-19A536-RA	WSE-M5B392-A

SPECIAL SERVICE TOOLS/EQUIPMENT

SPECIAL SERVICE TOOLS REQUIRED

Tool Number/ Description	Illustration
T52L-6306-AEE Crankshaft Damper and Sprocket Replacer	T52L-6306-AEE
T58P-6316-D Crankshaft Damper Remover	T58P-6316-D

(Continued)

SPECIAL SERVICE TOOLS REQUIRED (Cont'd)

Tool Number/ Description	Illustration
T65L-6250-A Camshaft Bearing Set	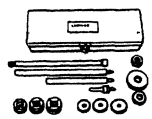 T65L-6250-A
T68P-6019-A Front Cover Aligner	T68P-6019-A
T68P-6135-A Piston Pin Remover/Replacer	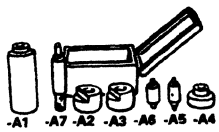 -A1 -A7 -A2 -A3 -A6 -A5 -A4 T68P-6135-A
T70P-6000 Engine Lifting Brackets	T70P-6000
T70P-6B070-B Front Cover Seal Replacer	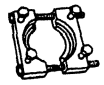 T70P-6B070-B
T70P-6049-A Valve Spring Compressor	T70P-6049-A

(Continued)

Official Licensed Product Ford Motor Company

SPECIAL SERVICE TOOLS/EQUIPMENT (Continued)

SPECIAL SERVICE TOOLS REQUIRED (Cont'd)

Tool Number/ Description	Illustration
T71P-6513-B Tappet Bleed Down Wrench	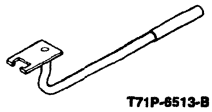 T71P-6513-B
T73P-6571-A Valve Seal Remover	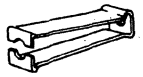 T73P-6571-A
T74P-6666-A Spark Plug Wire Remover	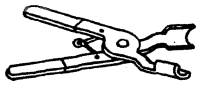 T74P-6666-A
T88T-6701-A Crankshaft Seal Replacer/Cover Aligner	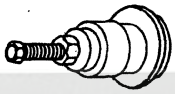 T88T-6701-A

SPECIAL SERVICE TOOLS DESIRED

Tool Number	Description
D78-4201-B	Dial Indicator with Bracketry
D80L-522-A	Gear and Pulley Puller
D81L-6002-C	Piston Ring Compressor
D87L-9280-A	Spring Lock Coupling Disconnect Tool (3/8-Inch)
D87L-9280-B	Spring Lock Coupling Disconnect Tool (1/2-Inch)
TOOL-4201-C	Dial Indicator with Bracketry
TOOL-6331-E	Main Bearing Insert Tool
TOOL-6500-E	Hydraulic Tappet Leak-Down Tester

ROTUNDA EQUIPMENT

Model	Description
014-00942	Low Lift Transmission Jack

Official Licensed Product
Ford Motor Company

SECTION 03-01C Engine, 7.3L Diesel

SUBJECT	PAGE
VEHICLE APPLICATION	03-01C-2
DESCRIPTION AND OPERATION	
Components	03-01C-6
Cooling System	03-01C-16
Engine Description	03-01C-2
Engine Identification	03-01C-3
Lubrication System	03-01C-14
High-Pressure System	03-01C-15
Low-Pressure System	03-01C-14
Mass Flywheel, Dual — Manual Transmission	03-01C-13
DIAGNOSIS AND TESTING	
Engine	03-01C-17
REMOVAL AND INSTALLATION	
Camshaft	03-01C-35
Camshaft Bearings	03-01C-37
Camshaft Drive Gear and Thrust Plate	03-01C-35
Compressor Manifold and Hoses	03-01C-33
Crankcase Breather Assembly	03-01C-33
Crankshaft	03-01C-55
Crankshaft Damper	03-01C-23
Crankshaft Gear	03-01C-35
Crankshaft Rear Oil Seal	03-01C-49
Cylinder Head, Left	03-01C-44
Cylinder Head, Right	03-01C-40
Engine	03-01C-17
Engine Front Cover	03-01C-34
Engine Oil Cooler	03-01C-57
Engine Rear Cover	03-01C-48
Exhaust Manifold, Left	03-01C-39
Exhaust Manifold, Right	03-01C-38
Flywheel	03-01C-47
Flywheel, Dual Mass	03-01C-47
Fuel Supply Pump	03-01C-26
Intake Manifold Covers	03-01C-33
Oil Filter	03-01C-56
Oil Pan and Oil Pump Screen Cover and Tube	03-01C-50
Oil Pump	03-01C-52
Oil Seal, Crankshaft — Front	03-01C-26
Piston and Connecting Rod	03-01C-53
Rocker Arm Cover, Rocker Arm and Push Rod, Left	03-01C-30
Rocker Arm Cover, Rocker Arm and Push Rod, Right	03-01C-27
Valve Spring, Valve Spring Retainer and Valve Stem Seal	03-01C-32
Valve Tappet	03-01C-33
Water Pump	03-01C-22
Water Thermostat	03-01C-21
DISASSEMBLY AND ASSEMBLY	
Cylinder Block	03-01C-59
Cylinder Head	03-01C-57
Engine Oil Cooler	03-01C-61
Oil Gallery Plugs	03-01C-60
Piston and Connecting Rod	03-01C-60
SERVICE PROCEDURES	
Drive Gear Backlash (All Gears)	03-01C-62
Oil Cooler Internal Leakage Test	03-01C-61
CLEANING AND INSPECTION	
Camshaft	03-01C-70
Cleaning	03-01C-70
Inspection	03-01C-70
Camshaft Timing — Front Cover Installed	03-01C-70
Inspection	03-01C-70
Connecting Rods	03-01C-68

SUBJECT	PAGE
CLEANING AND INSPECTION (Cont'd.)	
Inspection	03-01C-68
Core Plugs — Cup Type	03-01C-64
Crankshaft	03-01C-65
Cleaning	03-01C-65
Grinding Limits	03-01C-66
Inspection	03-01C-66
Journals, Refinishing	03-01C-66
Crankshaft Damper	03-01C-66
Cleaning	03-01C-66
Inspection	03-01C-66
Cylinder Block	03-01C-62
Cleaning	03-01C-63
Inspection	03-01C-63
Cylinder Heads	03-01C-73
Cleaning	03-01C-73
Cylinder Head Flatness	03-01C-74
Inspection	03-01C-73
Drive Gears	03-01C-66
Cleaning	03-01C-66
Inspection	03-01C-66
Exhaust Manifolds	03-01C-78
Cleaning	03-01C-78
Inspection	03-01C-78
Fitting Main Bearings or Connecting Rod Bearings with Plastigage®	03-01C-64
Connecting Rod Bearings	03-01C-65
Main Bearings	03-01C-64
Flywheel Clutch Face Machining	03-01C-78
Flywheel Inspection	03-01C-78
Transmission, Automatic	03-01C-78
Transmission, Manual	03-01C-78
Intake Manifold	03-01C-77
Cleaning	03-01C-77
Inspection	03-01C-78
Main Bearings and Connecting Rod Bearings	03-01C-64
Cleaning	03-01C-64
Inspection	03-01C-64
Oil Pan	03-01C-73
Cleaning	03-01C-73
Inspection	03-01C-73
Oil Pump Inspection	03-01C-72
Pistons, Piston Pins and Piston Rings	03-01C-67
Cleaning	03-01C-67
Inspection	03-01C-67
Piston Pins, Fitting	03-01C-67
Piston Rings, Fitting	03-01C-67
Pistons, Fitting	03-01C-67
Push Rods	03-01C-77
Cleaning	03-01C-77
Inspection	03-01C-77
Rocker Arm	03-01C-77
Cleaning	03-01C-77
Inspection	03-01C-77
Service Limit Specifications	03-01C-62
Valve Tappets	03-01C-72
Assembly	03-01C-72
Cleaning	03-01C-72
Disassembly	03-01C-72
Inspection	03-01C-72
Valves	03-01C-74
Valve Face Runout	03-01C-75
Valve Guide Removal	03-01C-76
Valve Seat Refacing	03-01C-76
Valve Seat Runout	03-01C-76
Valve Spring Squareness	03-01C-77

SECTION 03-01C Engine, 7.3L Diesel

SUBJECT	PAGE
CLEANING AND INSPECTION (Cont'd.)	
Valve Spring Tension	03-01C-76
Valve Stem-to-Valve Guide Clearance	03-01C-75
Valves, Refacing	03-01C-75
ADJUSTMENTS	
Engine	03-01C-78
SPECIFICATIONS	
Torque Wrench Information	03-01C-83
SPECIAL SERVICE TOOLS/EQUIPMENT	03-01C-84

VEHICLE APPLICATION

F-250 Heavy Duty, F-350 and F-Super Duty

DESCRIPTION AND OPERATION

Engine Description

The 7.3L diesel engine is:

- a four cycle turbocharged V-8 with overhead valves
- 7.3 liters (444 cubic inches) displacement
- separated into two banks, the right bank numbered 1, 3, 5, 7 and the left bank numbered 2, 4, 6, 8
- rated at 215 horsepower at 3000 rpm

The cylinder blocks (6010) has been designed to withstand the loads of diesel operations by using:

- four bolt main bearing caps
- internal piston cooling oil jet (6C327)
- a forged steel crankshaft (6303)
- heavy-duty forged steel connecting rods (6200)

The pistons are:

- made of aluminum alloy
- fitted with an upper keystone compression ring
- fitted with a lower rectangular compression ring
- fitted with oil control rings
- constructed with a steel band on the inside of piston skirt to prevent warpage

The piston pins (6135) are:

- free floating type permitting the piston pin to move/float freely in the piston pin bore
- retained in the pistons by piston pin retainers (6140)

The camshaft (6250) is:

- supported by five insert-type camshaft bearings (6A251)
- of the roller camshaft design
- driven by the crankshaft through the use of the crankshaft gear and the camshaft gear

The hydraulic valve tappets (6500):

- minimize engine noise
- maintain zero valve lash
- incorporate camshaft follower guides
- incorporate roller follower design that reduces camshaft wear

The cylinder heads (6049) are designed:

- to incorporate electronically controlled/hydraulically actuated fuel injectors (9F593)
- to locate the fuel injectors in the center of the combustion chambers between the rocker arms (6564)
- with integral high pressure oil galleys

The glow plug system is:

- designed to preheat the cylinders for faster cold weather starts
- controlled by the powertrain control module (PCM)(12A650)
- mounted directly into the cylinder heads
- activated by the glow plug control module (12B533)

The standard engine block heater (6A051) is:

- designed to heat the engine coolant and oil for improved cold weather starts
- located near the oil filter (6731) in the rear oil cooler header
- powered by a 110-volt external power source
- replaceable but not repairable

The engine is equipped with a closed crankcase ventilation system that:

- circulates crankcase vapors into the combustion chambers to be burned during the combustion cycle
- aids in the reduction of emissions levels

The fuel injection system used on the engine:

- is controlled by the powertrain control module
- uses a two-phase fuel pump (9350)
- circulates through a combination fuel filter, fuel heater and water separator assembly

Ford Licensed Product Ford Motor Company

DESCRIPTION AND OPERATION (Continued)

- uses eight electronically controlled / hydraulically actuated fuel injectors
- maintains operating pressures above a minimum 138 kPa (20 psi)

The engine lubrication system:

- is divided into two systems; the low-pressure system lubricates the engine (6007), the high-pressure system actuates the fuel injectors
- maintains pressures between 0 and 414 kPa (10 and 60 psi) for the low-pressure system and 4137 and 20685 kPa (600 and 3000 psi) for the high-pressure system
- is cooled by an engine oil cooler (6A642)
- uses an oil pressure sensor (9278) and an injection pressure regulator
- actuates the exhaust back pressure warm-up system integral to the turbocharger pedestal

Engine Identification

Vehicle identification, the location of the vehicle rating and data plates, and engine code information is fully covered in Section 00-01. For specific and exact engine identification, an engine calibration code label is affixed to the B-pillar and on the engine. Refer to the following illustrations for examples of engine identification labeling.

Licensed Product Ford Motor Company

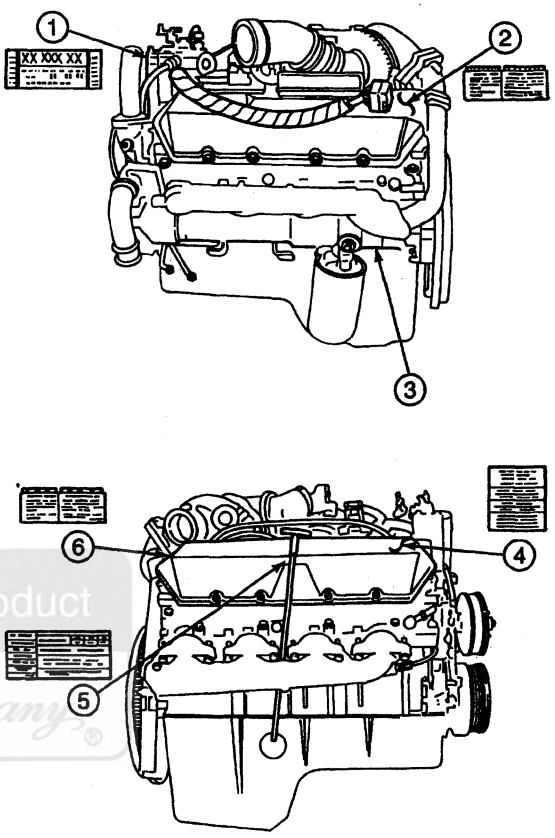

A23074-A

Item	Part Number	Description
1	—	Engine Code Label (Part of 6007)
2	—	Electrical System Caution (Part of 6007)
3	—	Stamped Serial Number (on Crankcase) (Part of 6007)
4	—	Oil Change Label (Part of 6007)
5	—	Emission Label (Part of 6007)
6	—	Electrical System Caution (Part of 6007)

DESCRIPTION AND OPERATION (Continued)

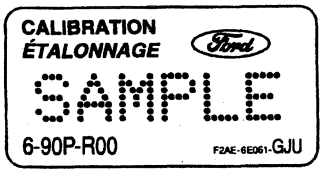

CALIFORNIA

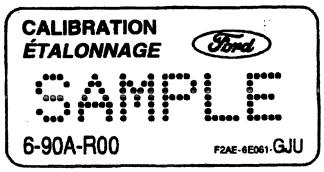

49 STATE AND CANADA

A26434-A

Always refer to the engine calibration code label when replacement parts are required or when checking engine calibrations. Some engine parts may vary with engine application and vehicle type. The codes contain information relating to dates, optional equipment and revisions. The Ford Master Parts Catalog contains a complete listing of the codes and their application. Additional identification information can be found in the permanent engine serial number (stamped on the lower rear left-hand side of the crankcase), the emission label (affixed to the right valve cover), or the engine serial sequence number label or oil change information label.

Official Licensed Product
Ford Motor Company

DESCRIPTION AND OPERATION (Continued)

Engine Code Label

ENGINE SERIAL NUMBER CHART

ENGINE DISPLACEMENT	VARIATION CODE	COUNTRY OF ORIGIN	SERIAL SEQUENCE NUMBER
7.3	TU2	U	XXXXXXX

7.3 = Engine Displacement in Litres
T = Turbocharged
U2 = OEM Application
U = Country of Origin - U.S.A.
XXXXXXX = Starting Sequence Number
* = Used to Prevent Tampering

ENGINE CODE LABEL IDENTIFICATION CHART

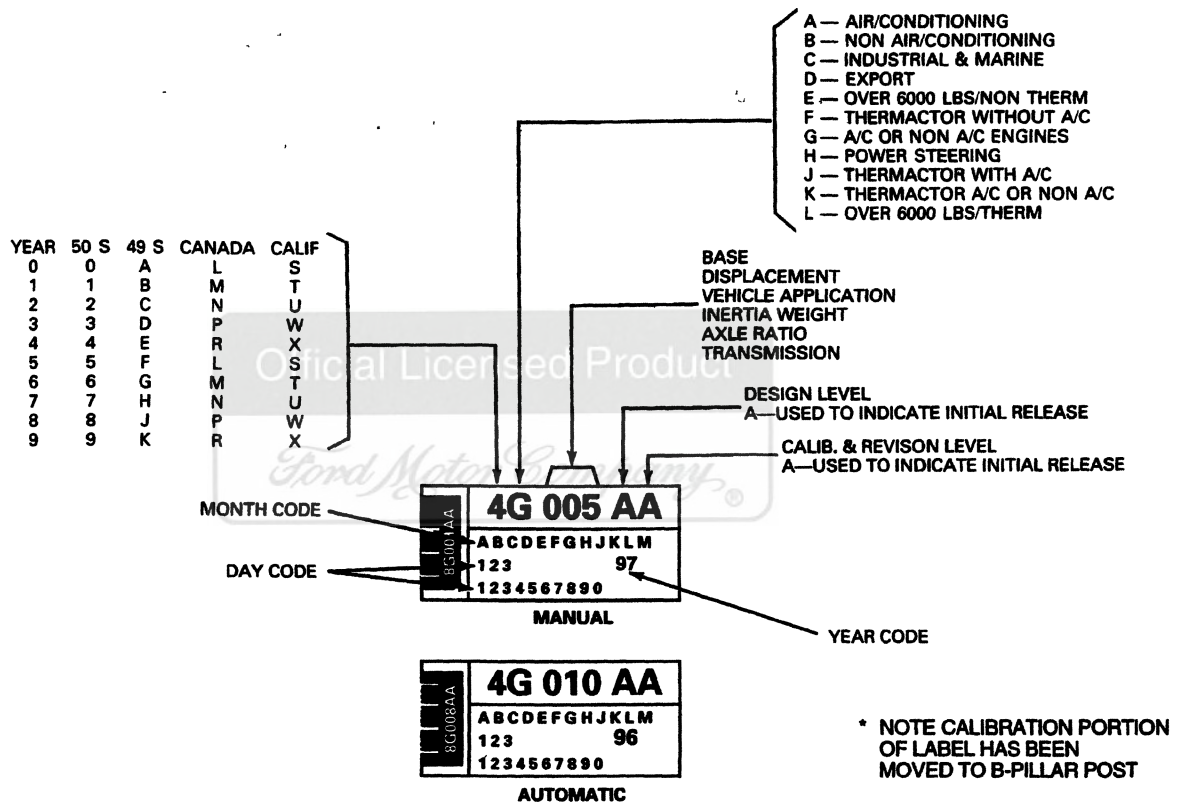

* NOTE CALIBRATION PORTION OF LABEL HAS BEEN MOVED TO B-PILLAR POST

DA0044-A

Official Licensed Product
Ford Motor Company

DESCRIPTION AND OPERATION (Continued)

Engine Emission Label

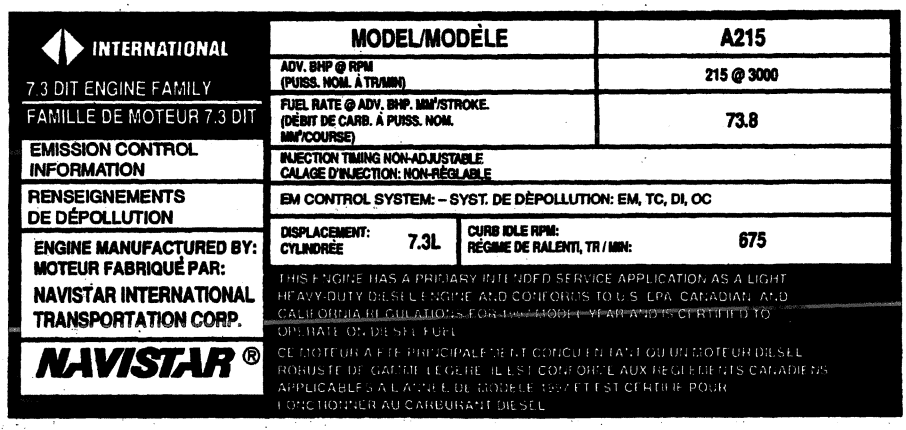

INTERNATIONAL	MODEL/MODÈLE	A215
7.3 DIT ENGINE FAMILY	ADV. BHP @ RPM (PUISS. NOM. À TR/MIN)	215 @ 3000
FAMILLE DE MOTEUR 7.3 DIT	FUEL RATE @ ADV. BHP. MM³/STROKE. (DÉBIT DE CARB. À PUISS. NOM. MM³/COURSE)	73.8
EMISSION CONTROL INFORMATION	INJECTION TIMING NON-ADJUSTABLE CALAGE D'INJECTION: NON-RÉGLABLE	
RENSEIGNEMENTS DE DÉPOLLUTION	EM CONTROL SYSTEM: – SYST. DE DÉPOLLUTION: EM, TC, DI, OC	
ENGINE MANUFACTURED BY: MOTEUR FABRIQUÉ PAR: NAVISTAR INTERNATIONAL TRANSPORTATION CORP.	DISPLACEMENT: CYLINDRÉE 7.3L	CURB IDLE RPM: RÉGIME DE RALENTI, TR / MIN: 675
NAVISTAR®	THIS ENGINE HAS A PRIMARY INTENDED SERVICE APPLICATION AS A LIGHT HEAVY-DUTY DIESEL ENGINE AND CONFORMS TO U.S. EPA, CANADIAN AND CALIFORNIA REGULATIONS FOR THE MODEL YEAR AND IS CERTIFIED TO OPERATE ON DIESEL FUEL CE MOTEUR A ÉTÉ PRINCIPALEMENT CONÇU EN TANT QU'UN MOTEUR DIESEL ROBUSTE DE CATÉGORIE LÉGÈRE. IL EST CONFORME AUX RÈGLEMENTS CANADIENS APPLICABLES À L'ANNÉE DE MODÈLE 19__ ET EST CERTIFIÉ POUR FONCTIONNER AU CARBURANT DIESEL	

DA0043-A

Components

Refer to the illustrations on the following pages when performing procedures in this section. Part descriptions and part numbers listed correspond with the Ford Master Parts Catalog.

Licensed Product
Ford Motor Company

DESCRIPTION AND OPERATION (Continued)

7.3L Diesel Engine, Disassembled View

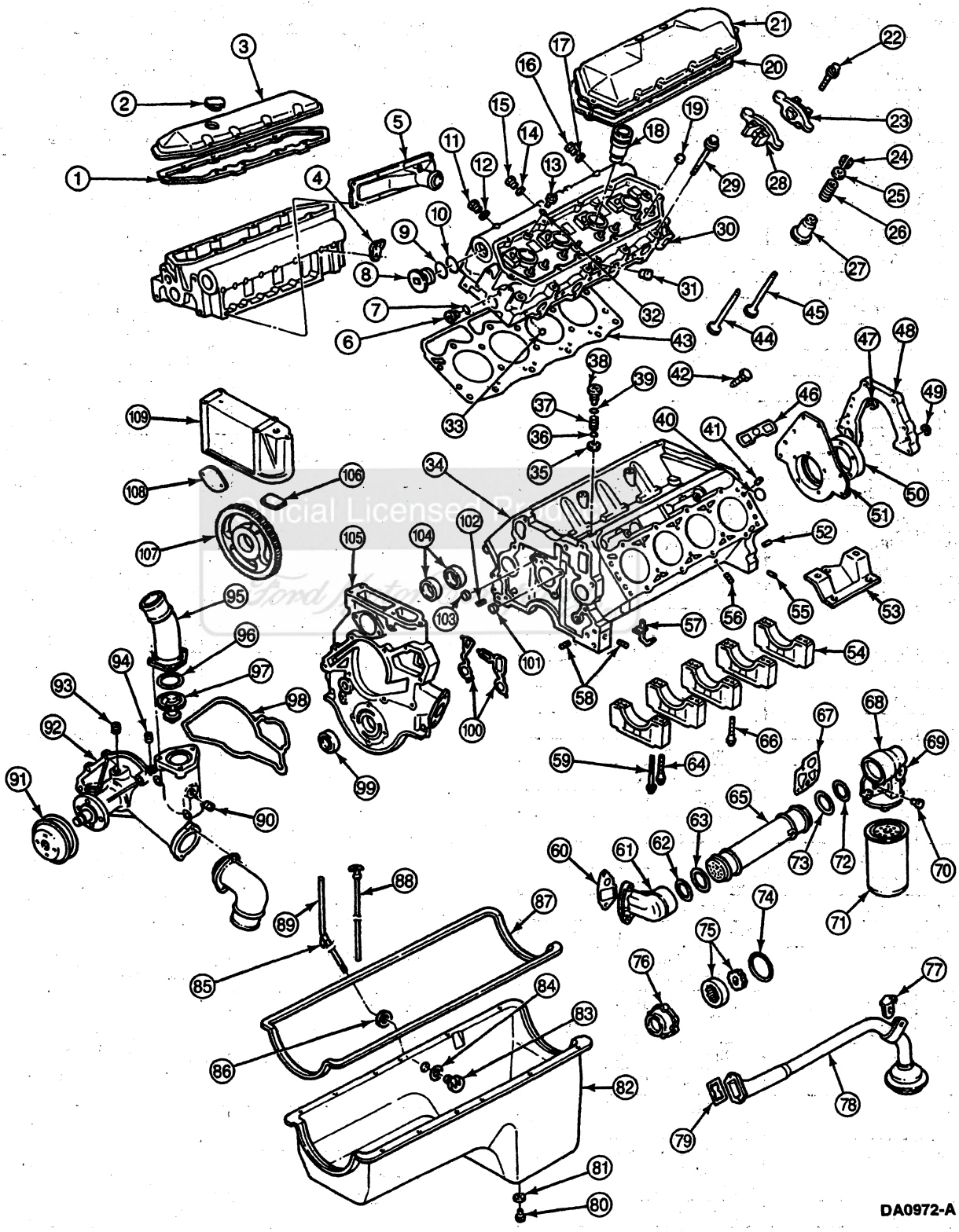

Official Licensed Reproduction

DESCRIPTION AND OPERATION (Continued)

Item	Part Number	Description
1	6584	Valve Cover Gasket
2	6766	Oil Filler Cap
3	6582	Valve Cover
4	—	Lifting Eye (Part of 6010)
5	9E434	Intake Manifold Cover
6	1818188C1	Plug, Fuel Rail Drain
7	1815734C1	O-Ring, Fuel Rail Drain Plug
8	1818186C1	Plug, Oil Supply Rail
9	1814546C1	Ring, Backup Supply Rail
10	1815873C1	O-Ring, Oil Supply Rail
11	9410357	Plug
12	9N693	O-Ring
13	1815944C1	Plug, Oil Rail Drain
14	9N693	O-Ring
15	9410357	Plug
16	9410357	Plug
17	9N693	O-Ring
18	9F538	Sleeve, Fuel Injector
19	6026	Plug, Cup
20	6584	Valve Cover Gasket
21	6582	Valve Cover
22	6A527	Rocker Arm Bolt
23	6564	Rocker Arm
24	6518	Valve Spring Retainer Key
25	6514	Valve Spring Rotator
26	6513	Valve Spring
27	6571	Valve Stem Seal
28	6564	Rocker Arm
29	6065	Cylinder Head Bolt
30	6049	Cylinder Head
31	445751	Plug, Pipe
32	1815887C1	O-Ring
33	6026	Ball, Steel (Plug)
34	6010	Cylinder Blocks
35	—	Seat, Ball (Part of 6674)
36	—	Ball, 1/2-Inch Metal (Part of 6674)
37	6670	Oil Pump Relief Valve Spring
38	6666	Oil Pump Relief Valve Plug
39	—	O-Ring (Part of 6674)
40	6026	Engine Block Plug
41	6A008	Cylinder Head to Block Dowel
42	6C330	Camshaft Follower Guide Retaining Bolt (Part of 6C329)
43	6051	Head Gasket
44	6507	Intake Valve

(Continued)

Item	Part Number	Description
45	6505	Exhaust Valve
46	6C329	Guide, Camshaft Follower
47	437157 R1	Ring, Flywheel Adapter Housing Retaining
48	6A369	Flywheel Front Adapter
49	437157 R1	Ring, Flywheel Adapter Housing Retaining
50	6701	Crankshaft Rear Oil Seal
51	6L080	Cover, Engine Rear
52	20640 R1	Pin, Dowel
53	6031	Bracket, Front Engine Support Mounting
54	—	Cap, Main Bearing (Part of 6010)
55	—	Plug, Oil Cooler Drain 3/8 NPTF (Part of 6010)
56	—	Plug, 1/4-18 (Part of 6010)
57	6C327	Piston Cooling Oil Jet
58	445684	Plug, Oil Galley 3/8 NPTF
59	6345	Crankshaft Main Bearing Cap Stud
60	6A636	Gasket, Oil Cooler Front Header
61	6881	Header, Oil Cooler Front
62	6K649	O-Ring, Oil Cooler Inner
63	6C610	O-Ring, Oil Cooler Outer
64	6345	Crankshaft Main Bearing Cap Stud
65	6A642	Oil Cooler
66	6345	Crankshaft Main Bearing Cap Stud
67	6A636	Gasket, Oil Cooler Rear Header
68	6881	Header, Oil Cooler Rear
69	6A051	Block Heater
70	—	Plug (Part of 6881)
71	6731	Oil Filter
72	6K649	O-Ring, Oil Cooler Outer
73	6C610	O-Ring Oil Cooler Inner
74	6619	O-Ring, Oil Pump Body Plate
75	6608	Oil Pump Drive Rotor and Gear
76	6616	Oil Pump Body Plate
77	6A661	Bracket, Oil Pump Screen Cover and Tube
78	6622	Oil Pump Screen Cover and Tube
79	6626	Oil Pump Inlet Tube Gasket
80	6730	Oil Pan Drain Plug
81	6734	Oil Pan Drain Plug Gasket
82	6675	Oil Pan

(Continued)

Official Licensed Product Ford Motor Company

DESCRIPTION AND OPERATION (Continued)

Item	Part Number	Description
83	—	Adapter, Oil Level Indicator Tube (Part of 6754)
84	—	O-Ring, Oil Level Indicator Tube Adapter Retainer (Part of 6754)
85	—	Flange, Oil Level Indicator Tube Adapter Retainer (Part of 6754)
86	—	O-Ring, Oil Level Indicator Tube (Part of 6754)
87	E2AZ-19562-B	Gasket Maker
88	6750	Oil Level Dipstick
89	6754	Oil Level Indicator Tube
90	—	Plug, Pipe (Part of 8501)
91	8509	Water Pump Pulley
92	8501	Pump, Water
93	—	Plug, Pipe (Part of 8501)
94	—	Plug, Pipe (Part of 8501)
95	8592	Outlet, Water Pump

(Continued)

Item	Part Number	Description
96	8255	Gasket, Water Outlet
97	8575	Water Thermostat
98	8507	Water Pump Housing Gasket
99	6700	Crankshaft Front Seal
100	6020	Engine Front Cover Gasket
101	—	Plug, Tappet Oil Gallery (Part of 6010)
102	6B041	Pin, Dowel (Engine Front Cover)
103	—	Plug, Tappet Oil Gallery (Part of 6010)
104	6A251	Camshaft Bearing
105	6019	Engine Front Cover
106	6619	Gasket, Oil Reservoir
107	6655	Gear, High Pressure Oil Pump Drive
108	1818208C1	Cover, Oil Pump Drive Gear Access
109	6658	Reservoir, High Pressure Oil Pump Supply

Official Licensed Product
Ford Motor Company

7.3L Diesel Engine, Internal View

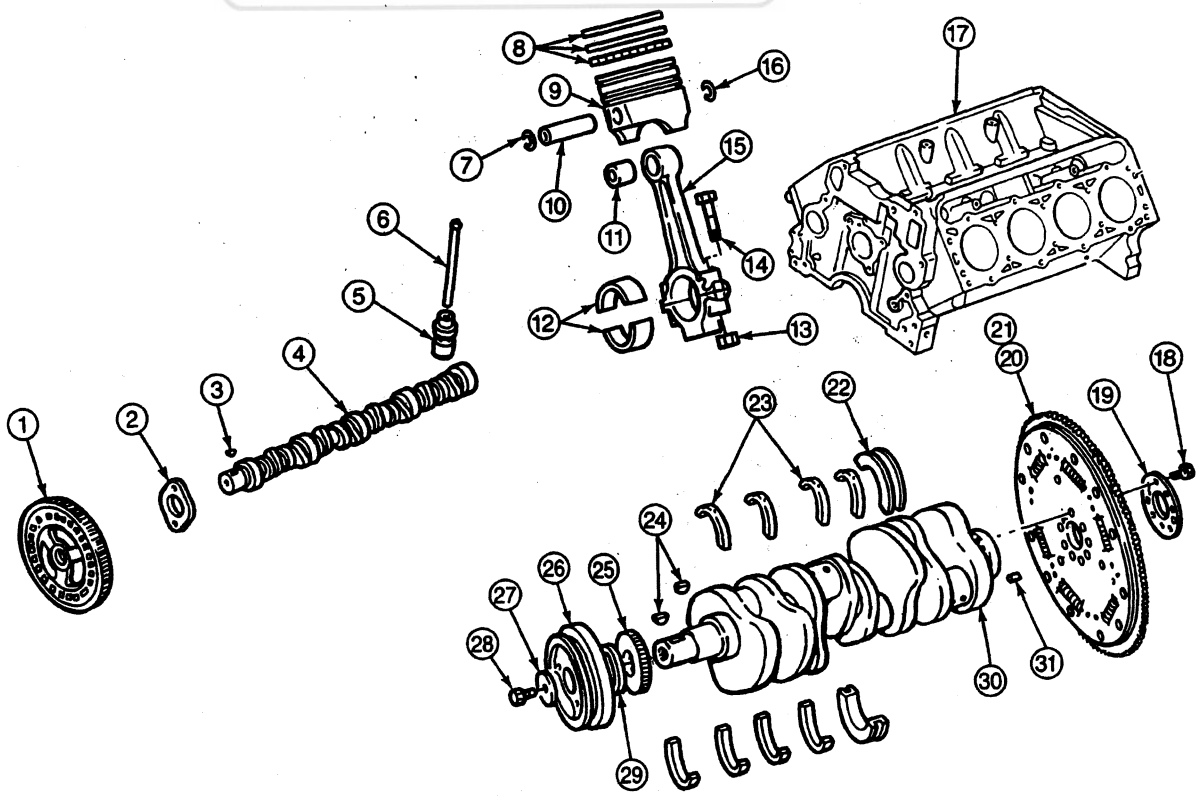

A22008-B

DESCRIPTION AND OPERATION (Continued)

Item	Part Number	Description
1	6256	Camshaft Gear
2	6269	Camshaft Thrust Plate
3	6L269	Camshaft Gear Key
4	6250	Camshaft
5	6500	Valve Tappet
6	6565	Push Rod
7	6140	Piston Pin Retainer
8	6148	Partial Piston Ring Set
9	6102	Piston, Pin and Ring
10	6135	Piston Pin
11	6207	Connecting Rod Bushing
12	6211	Connecting Rod Bearing
13	6212	Connecting Rod Nut
14	6214	Connecting Rod Bolt
15	6200	Connecting Rod
16	6140	Piston Pin Retainer
17	6010	Cylinder Blocks

(Continued)

Item	Part Number	Description
18	6379	Flywheel Attaching Bolt
19	6A366	Flywheel Reinforcing Plate
20	6375	Flywheel (Automatic Transmission) (Not Shown)
21	6477	Flywheel Assy, Dual Mass (Manual Transmission)
22	6337	Crankshaft Thrust Main Bearing
23	6333	Crankshaft Main Bearing
24	6B316	Crankshaft Key
25	6306	Crankshaft Gear
26	6312	Crankshaft Pulley
27	6332	Washer, Crankshaft Vibration Damper
28	6A340	Crankshaft Pulley Bolt
29	6310	Crankshaft Damper Wear Ring
30	6303	Crankshaft
31	20024 R1	Pin, Dowel

Official Licensed Product
Ford Motor Company

7.3L Diesel Engine, Front View

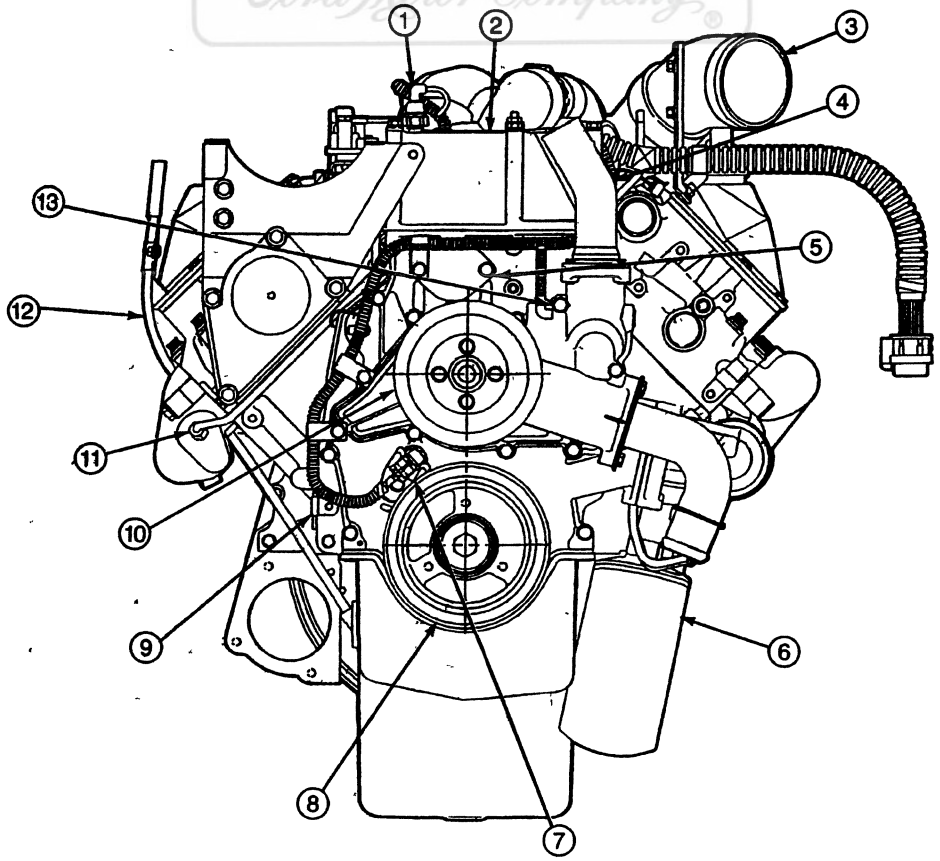

DA0041-A

DESCRIPTION AND OPERATION (Continued)

Item	Part Number	Description
1	9278	Oil Pressure Sensor
2	6658	High-Pressure Oil Pump Supply Reservoir
3	1820052C92	Air Intake Tube
4	8592	Water Pump Outlet
5	1818208C1	High-Pressure Oil Pump Drive Gear Access Cover
6	6731	Oil Filter

(Continued)

Item	Part Number	Description
7	6B288	Camshaft Position Sensor
8	6316	Crankshaft Vibration Damper
9	9L273	Fuel Filter Water Drain Tube
10	8509	Water Pump Pulley
11	9D477	Exhaust Back Pressure Tube
12	6754	Oil Level Indicator Tube
13	10884	Engine Coolant Gauge Sensor

7.3L Diesel Engine, Left Side

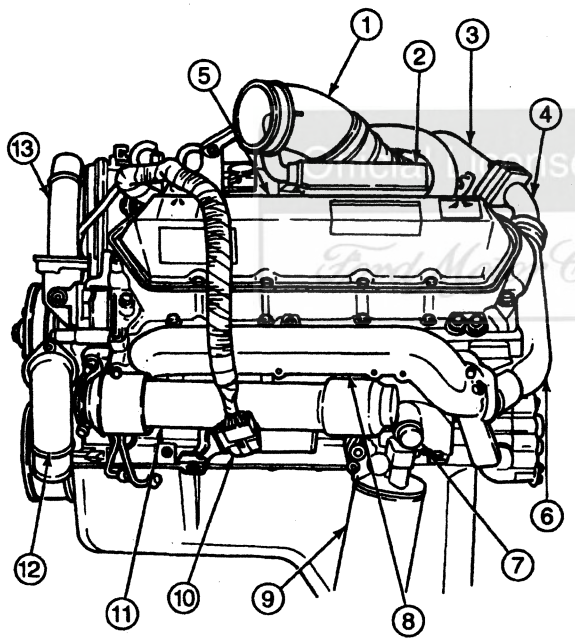

A22261-A

Item	Part Number	Description
1	1820052	Air Intake Tube
2	6769	Crankcase Breather Assy
3	6K682	Turbocharger Assy
4	6K854	Turbocharger Exhaust Collector
5	6582	Valve Cover (LH)
6	6K854	Turbocharger Exhaust Inlet Pipe (LH)
7	6A051	Block Heater
8	9430	Exhaust Manifold (LH)

(Continued)

Item	Part Number	Description
9	6731	Oil Filter
10	12A581	Engine Control Sensor Wiring
11	6A642	Oil Cooler
12	8592	Water Pump Inlet
13	8592	Water Pump Outlet

7.3L Diesel Engine, Rear View

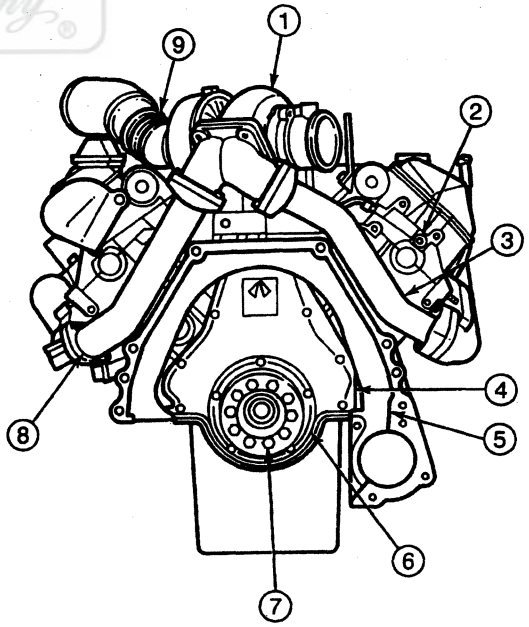

A22262-B

Item	Part Number	Description
1	6K682	Turbocharger Assy
2	1818188C1	Fuel Rail Drain Plug

(Continued)

DESCRIPTION AND OPERATION (Continued)

Item	Part Number	Description
3	6K854	Turbocharger Exhaust Inlet Pipe (RH)
4	6L080	Crankcase Rear Cover
5	6A369	Flywheel Front Adapter
6	6701	Crankshaft Rear Oil Seal
7	6379	Flywheel Attaching Bolt
8	6K854	Turbocharger Exhaust Inlet Pipe (LH)
9	9C681	Air Intake Hose

7.3L Diesel Engine, Right Side

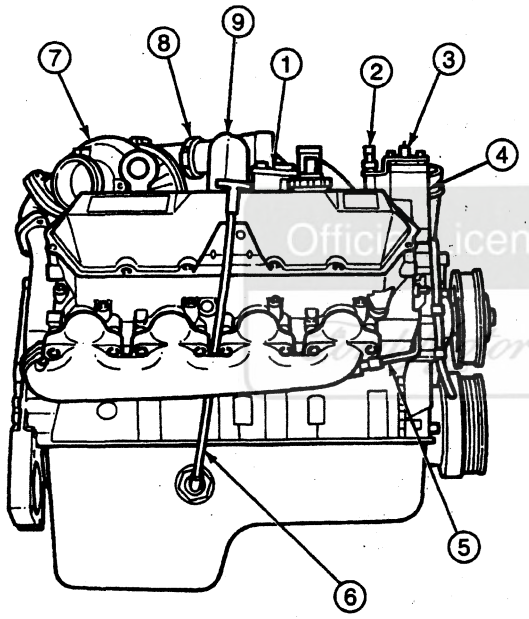

A22263-B

Item	Part Number	Description
1	9155	Fuel Filter
2	9J460	Exhaust Back Pressure Sensor

(Continued)

Item	Part Number	Description
3	9278	Oil Pressure Sensor
4	6658	High-Pressure Oil Pump Supply Reservoir
5	9D477	Exhaust Back Pressure Tube
6	6754	Oil Level Indicator Tube
7	6K682	Turbocharger Assy
8	8287	Compressor Manifold Clamp
9	6K889	Compressor Manifold

Official Licensed Product Motorcraft Company

DESCRIPTION AND OPERATION (Continued)

7.3L Diesel Engine, Top View

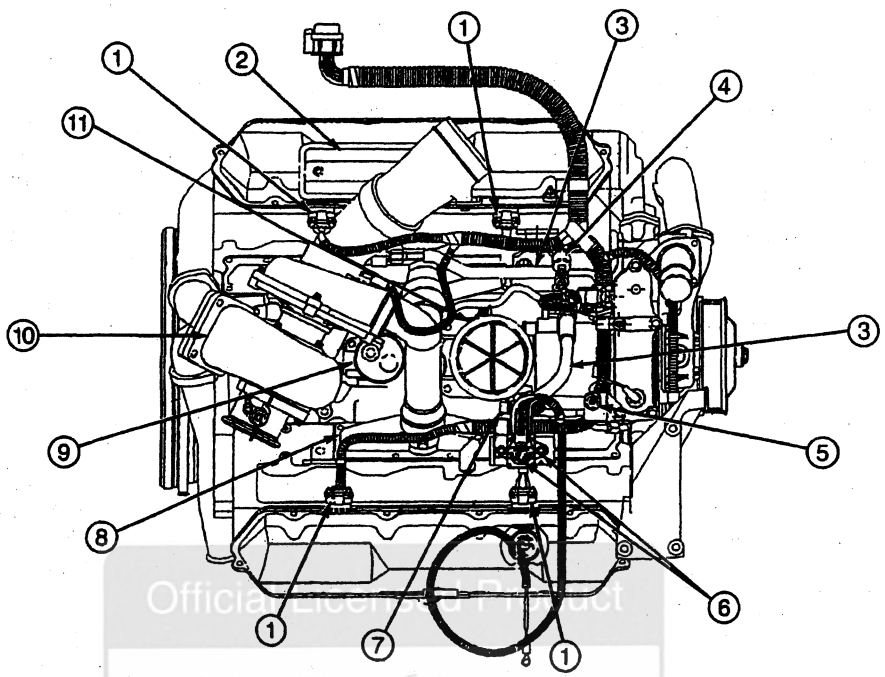

DA0042-A

Official Licensed Product
Ford Motor Company

Item	Part Number	Description
1	—	Fuel Injector and Glow Plug Electrical Connector to Rocker Arm Cover Gasket (Part of 12A581)
2	6769	Crankcase Breather Assy
3	9E313	High-Pressure Oil Pump Hose
4	9F838	Injection Control Pressure Sensor

(Continued)

Item	Part Number	Description
5	9J460	Exhaust Back Pressure Sensor
6	12B533	Glow Plug Relay
7	—	Fuel Filter Electrical Connector (Part of 12A581)
8	9E434	Intake Manifold Cover (RH)
9	9350	Fuel Pump
10	6K682	Turbocharger Assy
11	9155	Fuel Filter

Mass Flywheel, Dual — Manual Transmission

The flywheel used on the 7.3L diesel engine equipped with a manual transmission is known as a dual mass flywheel. The purpose of the dual mass flywheel is to provide one inertia mass connected directly to the engine crankshaft (6303) and a second inertia mass connected through the clutch system to the transmission (7003). The dual mass flywheel provides the same functions as a conventional flywheel, with mounting provisions for the starter ring gear, pilot bearing, clutch pressure plate and disc mounting location.

The first inertia mass provides sustaining energy to maintain engine (6007) operation between the times that the cylinders fire and maintains smooth power delivery.

The second inertia mass provides sustaining energy to the transmission.

Between these two inertia masses a series of springs and friction elements provide smooth, quiet operation and a torque limitation function to protect the drivetrain from impact shock.

The bearing used to mount the second inertia mass onto the first requires no lubrication.

DESCRIPTION AND OPERATION (Continued)

Dual Mass Flywheel

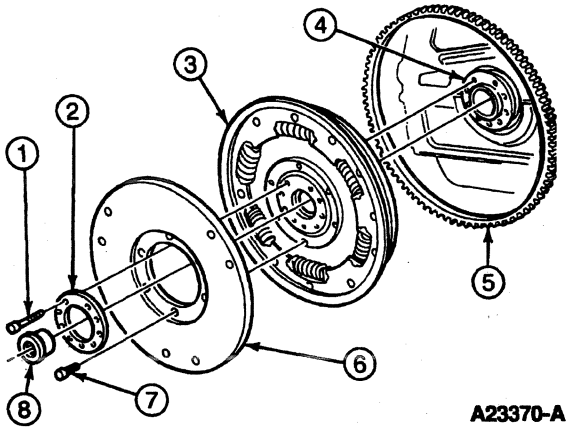

A23370-A

Item	Part Number	Description
1	6379	Flywheel Attaching Bolt (10 Req'd)
2	6A366	Flywheel Reinforcing Plate
3	6477	Primary Flywheel
4	—	Crankshaft Flange (Part of 6303)
5	6384	Flywheel Ring Gear
6	—	Secondary Flywheel (Part of 6477)
7	—	Secondary Flywheel Bolts with Washers (6 Req'd) (Part of 6477)
8	7600	Pilot Bearing

Lubrication System

Low-Pressure System

The lubrication system is comprised of a low-pressure system and a high-pressure system. The low-pressure system provides primary engine lubrication while the high-pressure system provides the hydraulic pressure required to actuate the fuel injectors. The low-pressure system consists of the following:

- oil pump screen cover and tube (6622)
- gerotor oil pump
- oil cooler and filter assembly

The low-pressure lubricating system draws oil from the engine oil pan (6675) through the oil pump screen cover and tube, into the oil inlet passage in the front cover. The gerotor oil pump then pumps the oil back out through the outlet passage in the front cover. The oil separates into two paths. One flow path sends oil into the high-pressure pump reservoir initial feed galley (integral to the cylinder block) and through the anti-drain back check ball. During cold start the oil feeds in two directions from the anti-drain back check ball. One feed leaves the check ball and enters the front cover. From there it enters the high-pressure oil reservoir. The second feed exits the check ball and enters the left bank valve lifter oil galley. After leaving the front cover outlet passage, the second oil path sends the oil through the oil cooler and filter assembly. Once inside the filter housing the oil filter bypass valve may open to vent excess pressure and oil back into the oil pan. After the oil has been circulated through the oil filter (6731), the oil feed then enters the main oil galley (integral to the cylinder block). Once in the main oil galley the oil is routed to the five crankshaft main bearings (6333) through five drilled and machined feed galleys (integral to the cylinder block). The five camshaft bearings receive the oil feed through five vertical drilled and machined feed galleys connected to the main bearing feed galleys. The front main bearing feed galley also supplies oil to the right bank valve lifter oil galley through a vertically drilled and machined oil feed galley (integral to the cylinder block). The rear main bearing oil feed galley also supplies oil to the turbocharger assembly through a vertically drilled and machined oil feed galley (integral to the cylinder block). Pressurized oil entering the turbocharger assembly is used to actuate the exhaust back pressure warm-up system. The oil drains back through the turbocharger mounting pedestal and back into the oil pan. The valve lifter oil galley supplies pressurized oil to the valve tappet (6500) and to the piston cooling oil jets. Oil from the valve tappets is routed upward to the cylinder head valve train through hollow push rods (6565). Once in the cylinder head (6049), the oil drains back to the oil pan through return ports at each end of the cylinder head.

DESCRIPTION AND OPERATION (Continued)

Low-Pressure Oil Flow 7.3L

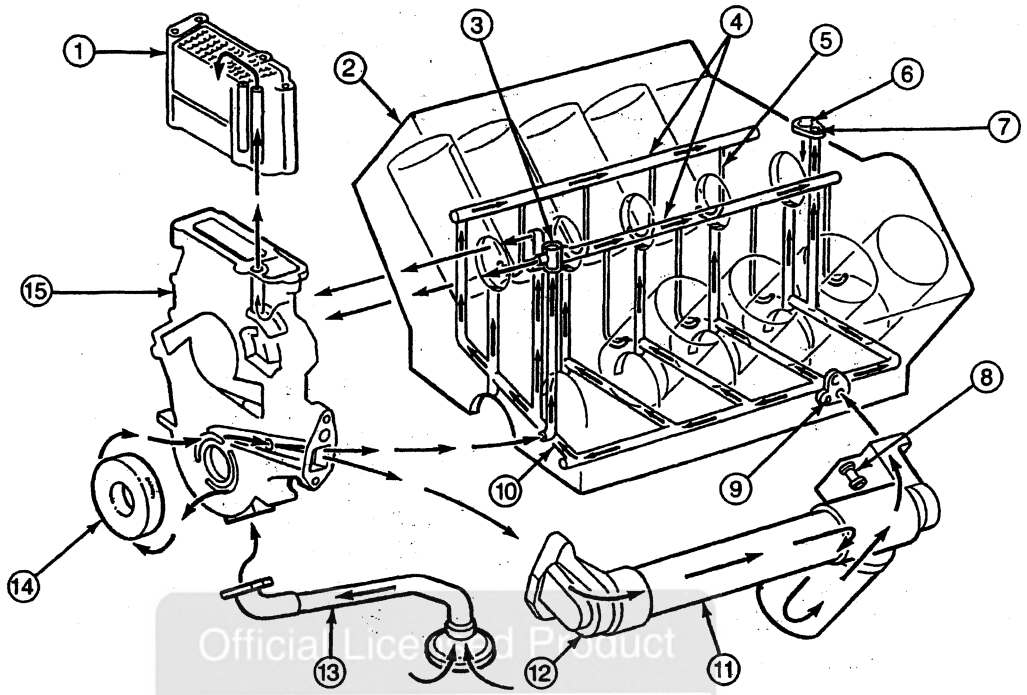

A24962-A

Item	Part Number	Description
1	6658	High-Pressure Oil Pump Reservoir
2	6010	Cylinder Blocks
3	—	Anti-Drain Check Ball (Part of 6658)
4	—	Valve Lifter Oil Galleys (Part of 6010)
5	6C327	Piston Cooling Oil Jets
6	—	Turbocharger Oil Return Galley (Part of 6010)
7	—	Turbocharger Oil Supply Galley (Part of 6010)

(Continued)

Item	Part Number	Description
8	—	Pressure Relief/Regulator Valve (Part of 9155)
9	—	Oil Filter Bypass Drain (Part of 6881)
10	—	Main Oil Galley (Part of 6010)
11	6A642	Oil Cooler
12	6881	Oil Cooler Header
13	6622	Oil Pump Screen Cover and Tube
14	6608	Gerotor Oil Pump
15	6019	Engine Front Cover

Official Licensed Product
Ford Motor Company

High-Pressure System

The high-pressure system consists of:

- an injection control pressure sensor
- an injection pressure regulator
- a high-pressure oil pump (6600)
- a left cylinder head high-pressure feed hose
- a right cylinder head high-pressure feed hose
- a high-pressure oil rail (integral to the cylinder heads)
- an oil pressure sensor (9278)

During initial start or cold start, the high-pressure oil pump receives unfiltered oil from the left side valve lifter oil galley through the anti-drain back check ball valve. Once the engine starts or during warm engine starts the check ball closes and the high-pressure oil pump receives filtered oil from the high-pressure oil pump reservoir. The high-pressure oil pump pumps the oil under extremely high pressures (4115-20577 kPa [600-3000 psi]) through the left and right side pressure oil rails (integral to the cylinder heads). Once in the oil rail the oil is fed to the fuel injector bores through four oil feed galleys drilled and machined in the cylinder head. The high-pressure oil then actuates the fuel injectors (9F593).

DESCRIPTION AND OPERATION (Continued)

High-Pressure Oil Flow — 7.3L

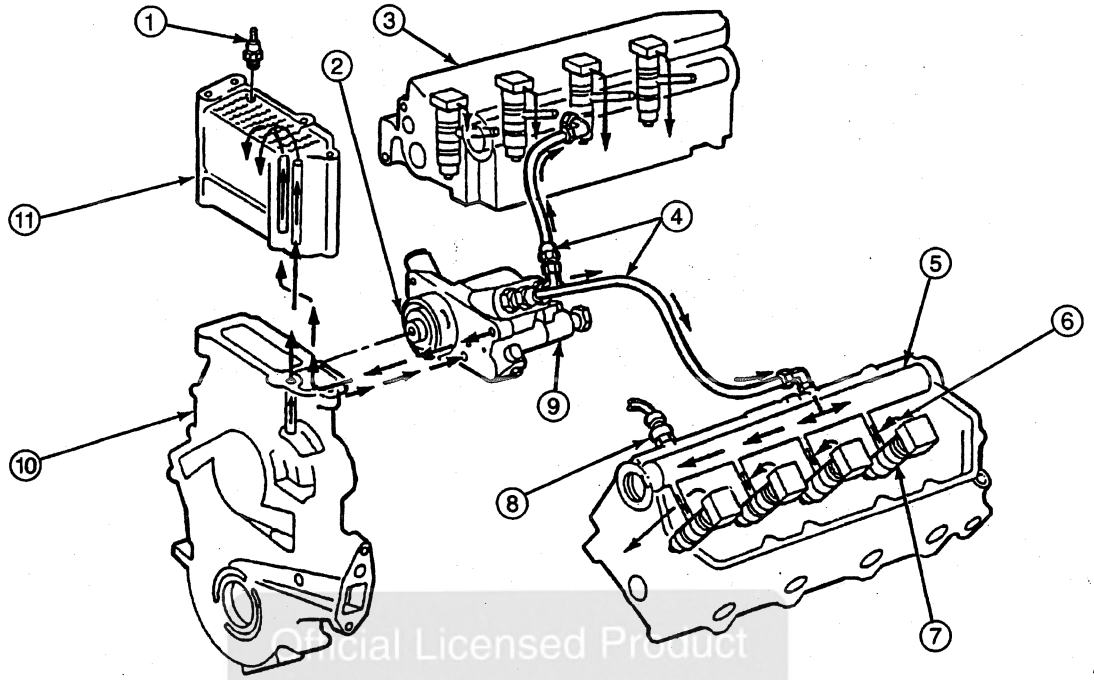

A24961-B

Official Licensed Product
Ford Motor Company

Item	Part Number	Description
1	9278	Oil Pressure Sensor
2	6600	High-Pressure Oil Pump
3	6049	Cylinder Head
4	9A332	High-Pressure Oil Feed Hoses
5	—	High-Pressure Oil Rail (Part of 6049)
6	—	Injector Oil Feed Galleys (Part of 6049)

Item	Part Number	Description
7	9F593	Fuel Injector (8 Required)
8	9F838	Injection Control Pressure Sensor
9	—	Injection Pressure Regulator (Part of 6600)
10	6019	Engine Front Cover
11	6658	High-Pressure Oil Pump Reservoir

(Continued)

Cooling System

WARNING: TO AVOID THE POSSIBILITY OF PERSONAL INJURY OR DAMAGE TO THE VEHICLE, DO NOT OPERATE THE ENGINE WITH THE HOOD OPEN UNTIL THE FAN BLADE HAS BEEN FIRST EXAMINED FOR POSSIBLE CRACKS AND SEPARATION.

The engine cooling system operates in the following manner:

- Engine coolant flows through the radiator tubes and is cooled by air passing over the cooling fins assisted by the cooling fan.
- Coolant flows from the radiator (8005) to the water pump, through the engine front cover to the cylinder block, cylinder head (6049), oil cooler (6A642) and on to the water thermostat (8575).
- Coolant also flows from the engine and from the top tank of the radiator into the degas bottle where air and combustion gas is removed from the coolant. The degassed coolant is then returned to the water pump.
- The degas bottle has a fill cap to allow coolant to be added to the cooling system.

DIAGNOSIS AND TESTING

Engine

Refer to the Powertrain Control / Emissions Diagnosis Manual.[1]

REMOVAL AND INSTALLATION

Engine

SPECIAL SERVICE TOOL(S) REQUIRED

Description	Tool Number
Fuel / Oil / Turbo Protector Cap Set	T94T-9395-AH
Fan Clutch Nut Wrench	T83T-6312-B
Fan Clutch Pulley Holder	T94T-6312-AH

Install Fuel / Oil / Turbo Protector Cap Set T94T-9395-AH as required for any fittings, lines or ports left exposed to prevent the entry of contaminants.

Protector Cap Locations

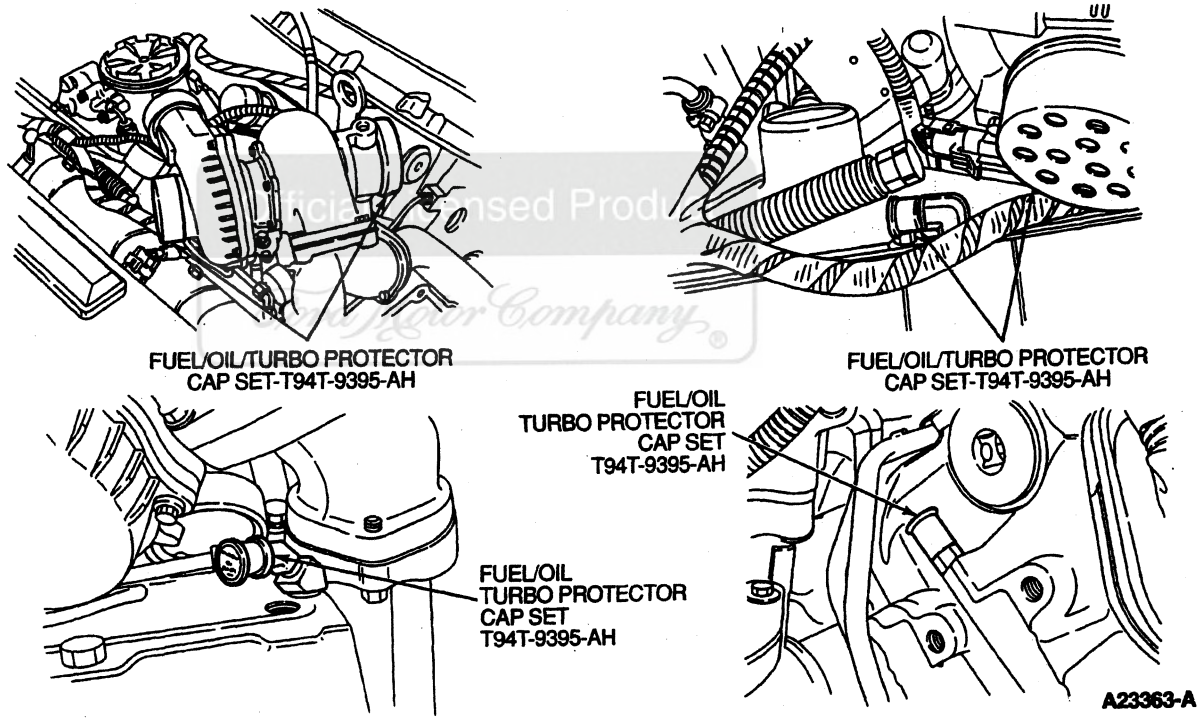

Removal

1. Disconnect the battery ground cable. On vehicles equipped with dual batteries, refer to Section 14-01.
2. NOTE: This step is for automatic transmission only.

   Remove turbocharger. Refer to Section 03-04D.
3. Drain the cooling system. Refer to Section 03-03.
4. Discharge and recover the refrigerant from the A / C system, if so equipped. Refer to Section 12-00 in the Body, Chassis Manual.
5. Remove the upper radiator hose clamps and upper radiator hose (8260).
6. Disconnect the radiator coolant reservoir hose at radiator (8005).

1 Can be purchased as a separate item.

REMOVAL AND INSTALLATION (Continued)

7. **CAUTION: Fan clutch has right-hand thread. Remove by turning nut counterclockwise.**

   Remove the fan and clutch assembly using Fan Clutch Nut Wrench T83T-6312-B and Fan Clutch Pulley Holder T94T-6312-AH. Set the fan and clutch assembly in fan shroud (8146).

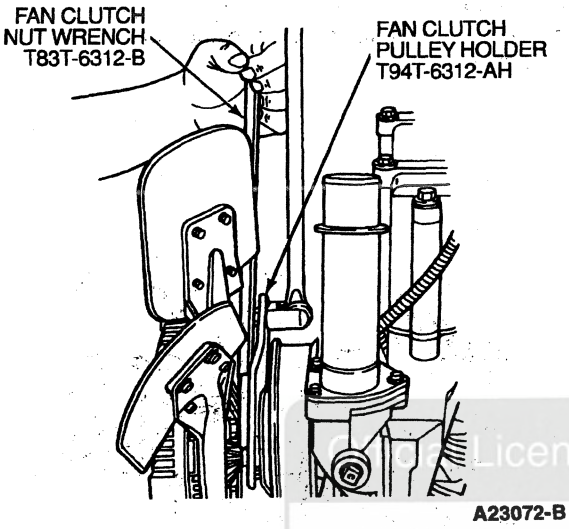

A23072-B

8. Remove the fan shroud screws.
9. Remove the fan shroud and fan and clutch assembly.
10. Disconnect the lower radiator hose (8286) from radiator.
11. Remove the radiator retaining bolts.
12. Disconnect the heater hose and transmission cooler hoses (automatic transmission only) from radiator.
13. Remove the radiator.
14. Remove the drive belt (8620). Refer to Section 03-05.
15. Disconnect the generator electrical connectors.
16. Remove the generator retaining bolt and lay the heater hose aside.
17. Remove the generator bracket retaining bolts and generator bracket (10A313) (with generator (GEN)(10300) attached).
18. Disconnect the electrical connectors from A/C compressor (19703), if so equipped.
19. Disconnect the air conditioning manifold lines from the A/C compressor.
20. Disconnect the vacuum pump hose from the vacuum pump (2A451).
21. Disconnect the power steering pump lines from the power steering pump (3A674).
22. Disconnect the A/C lines at the condenser and position the A/C lines aside.
23. Disconnect the heater hoses at the water pump and the right cylinder head.
24. Disconnect the lower radiator hose from the water pump.
25. Remove the right-side battery cable clamp and bolts from engine.
26. Disconnect the MAP sensor vacuum hose from the intake manifold cover (9E434).
27. Disconnect the engine control sensor wiring (12A581) from the left side of the engine compartment and lay on top of the engine.

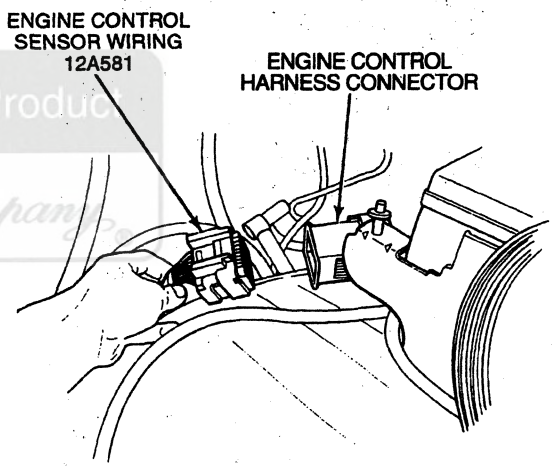

A22266-C

28. Remove the jack handle.
29. Remove air cleaner cover.
30. Remove engine charge exhaust pipe-to-turbocharger clamp.
31. Disconnect the wiring harness from the starter solenoid and lay across engine.
32. Raise vehicle.
33. NOTE: This step applies only to manual transmission.

    Remove transmission. Refer to Section 07-03.

Ford Motor Company Licensed Product

REMOVAL AND INSTALLATION (Continued)

34. Remove the right and left turbocharger exhaust inlet pipe bolts and nuts.

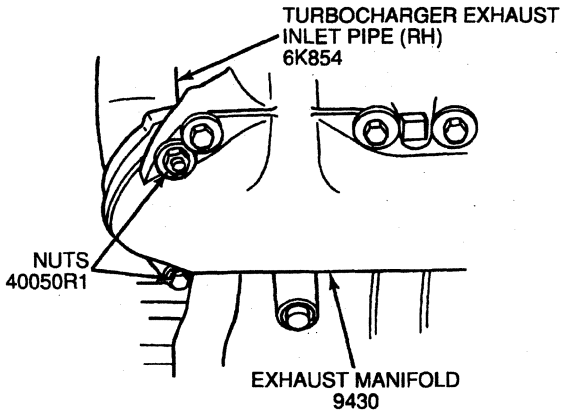

A22033-B

35. Remove the left battery ground cable (14301) and bolt from the cylinder blocks (6010).
36. Relieve fuel system pressure. Disconnect the fuel lines at the fuel line quick connects.
37. Disconnect the engine block heater (6A051).
38. Remove the oil filter.
39. Disconnect the starter motor electrical connectors.
40. Remove the starter bolts and starter motor (11002).
41. Remove the right and left engine mount nuts.
42. NOTE: Steps 42-44 apply only to automatic transmissions. Refer to Section 07-01.

    Remove transmission housing cover, if so equipped.
43. Remove four torque converter-to-flywheel attaching nuts.
44. Remove the lower transmission retaining bolts.
45. NOTE: This step also applies to manual transmissions.

    Lower vehicle.
46. NOTE: Steps 46-47 apply only to automatic transmissions.

    Remove the ground strap bolt at rear of engine.

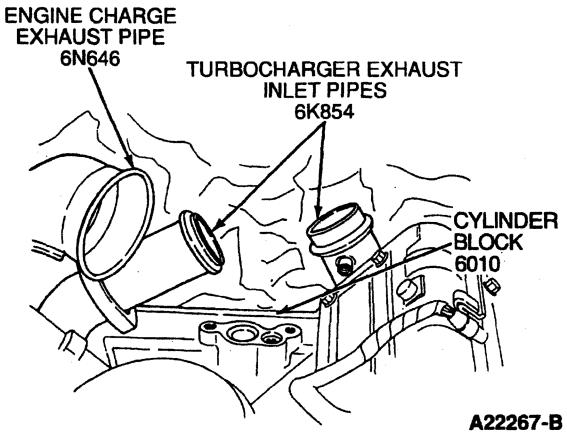

A22267-B

47. Remove the two upper transmission retaining bolts.
48. NOTE: This step applies to automatic and manual transmissions.

    Use suitable jack to support transmission.
49. Remove the front lamp harness plastic fasteners and lay the harness forward.
50. Remove the engine with the help of an assistant. Turn engine 45 degrees to the left and lift engine from compartment. Mount the engine on a work stand using Rotunda Engine Mounting Bracket 014-00939 or equivalent.

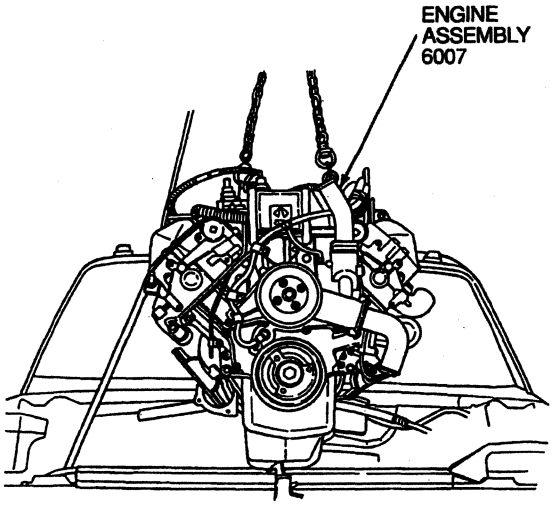

A22268-A

Official Licensed Product
Ford Motor Company

REMOVAL AND INSTALLATION (Continued)

ENGINE MOUNTING BRACKET
014-00939

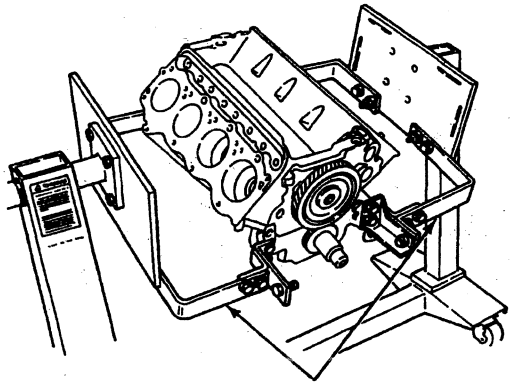

ENGINE MOUNTING BRACKET
014-00939

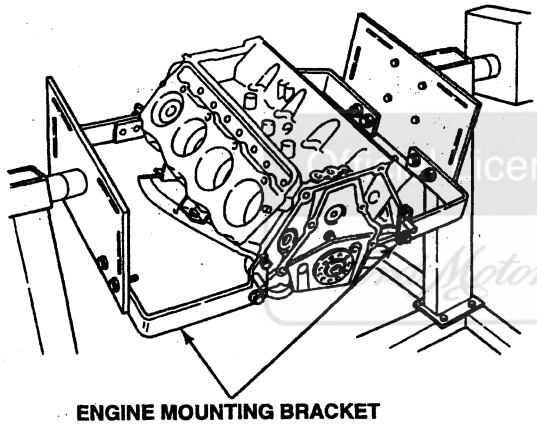

ENGINE MOUNTING BRACKET
014-00939

DA0967-A

Installation

1. Install the engine assembly. If equipped with automatic transmission, carefully align torque converter studs with holes in flywheel.
2. Install the engine mount nuts. Tighten nuts to 96-127 N·m (71-94 lb-ft).
3. NOTE: This step applies to automatic and manual transmissions.

   Start the two upper transmission retaining bolts.
4. Raise vehicle.
5. Start the lower transmission bolts.
6. NOTE: This step applies only to manual transmission.

   Install transmission. Refer to Section 07-03.
7. Tighten the transmission attaching bolts to 53-72 N·m (39-53 lb-ft).
8. NOTE: This step applies only to automatic transmissions.

   Install flywheel-to-torque converter attaching nuts, and tighten to 121 N·m (89 lb-ft).
9. Install flywheel housing cover, if so equipped, and tighten screws to 17-23 N·m (13-17 lb-ft).
10. Install the starter motor and retaining bolts. Refer to Section 03-06B.
11. Install the oil filter (6731).
12. Connect the engine block heater electrical connector to the block heater.
13. Connect the fuel line quick connectors and install retaining clips.
14. Install the left battery ground cable and bolt to cylinder blocks.
15. Lower vehicle.
16. Install the front lamp harness and install retainers.
17. Install the ground strap and bolt to the right cylinder head (6049).
18. Connect the wiring harness to starter solenoid.
19. Connect the engine control sensor wiring.
20. Connect the lower radiator hose to water pump inlet and install hose clamp.
21. Connect the heater hoses at the water pump and right cylinder head.
22. Connect the air conditioning line at condenser.
23. Install the battery terminal clamp and bolts to the engine.
24. Connect the power steering pump lines to the power steering pump. Tighten the power steering pressure line to 30-40 N·m (22-29 lb-ft).
25. Connect the vacuum pump hose to the brake vacuum pump.
26. Connect the air conditioning manifold lines to A/C compressor, if so equipped. Tighten the A/C manifold lines to 18-23 N·m (13-17 lb-ft).
27. Install generator bracket and bolts. Tighten bolts to 40-55 N·m (30-40 lb-ft).
28. Reposition heater hose and install generator retaining bolt. Tighten bolt to 40-55 N·m (30-40 lb-ft).
29. Connect electrical connectors to generator and A/C compressor.
30. Install the drive belt.
31. Install radiator.
32. Install the radiator retaining bolts and tighten to 24-34 N·m (18-25 lb-ft).
33. Connect the heater hose and transmission cooler hoses to radiator (automatic transmission only).
34. Connect the lower radiator hose to radiator and install the radiator hose clamp.
35. Position fan and clutch assembly inside fan shroud and position in vehicle.
36. Position fan shroud on the radiator.
37. Install fan shroud retaining screws and tighten to 5-8 N·m (44-71 lb-in).

REMOVAL AND INSTALLATION (Continued)

38. **CAUTION: Fan clutch has right-hand thread. Install by turning nut clockwise.**

    Install the fan and clutch assembly using Fan Clutch Nut Wrench T83T-6312-B and Fan Clutch Pulley Holder T94T-6312-AH or equivalent.

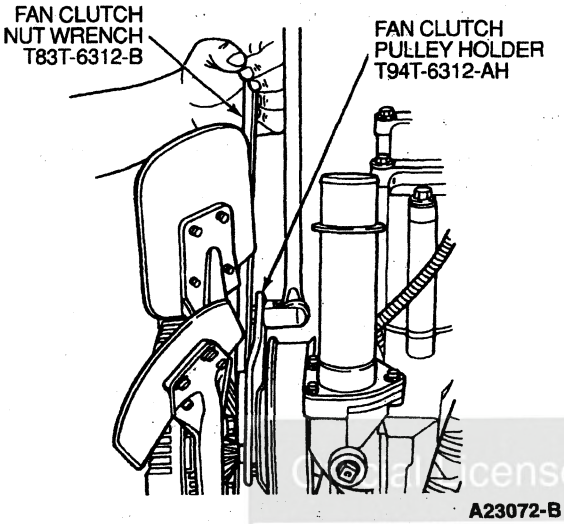

A23072-B

39. Connect the radiator coolant recovery reservoir hose at radiator.
40. Install the upper radiator hose and hose clamps.
41. NOTE: This step applies only to automatic transmission.

    Install turbocharger assembly. Refer to Section 03-04D.
42. Evacuate and recharge the refrigerant to the A/C system. Refer to Section 12-00 in the Body, Chassis Manual.
43. Refill the power steering system. Refer to Section 11-00 in the Body, Chassis Manual.
44. NOTE: When the battery (10655) has been disconnected and reconnected, some abnormal drive symptoms may occur while the powertrain control module (PCM)(12A650) relearns its adaptive strategy. The vehicle may need to be driven 16 km (10 miles) or more to relearn the strategy.

    Reconnect the battery ground cable. On vehicles equipped with dual batteries, refer to Section 14-01.
45. Refill the engine cooling system. Refer to Section 03-03.
46. Refill the crankcase and high-pressure oil pump supply reservoir with the proper grade and quantity of oil.

Water Thermostat

Removal

1. Partially drain the cooling system. Refer to Section 03-03.
2. Disconnect the drive belt (8620) at the drive belt tensioner pulley.
3. Remove the upper radiator hose clamp at the water pump outlet and disconnect the upper radiator hose (8260) from the water pump outlet.
4. Remove retaining screws and the water pump outlet.
5. Remove the water hose connection gasket (8255) and water thermostat (8575).

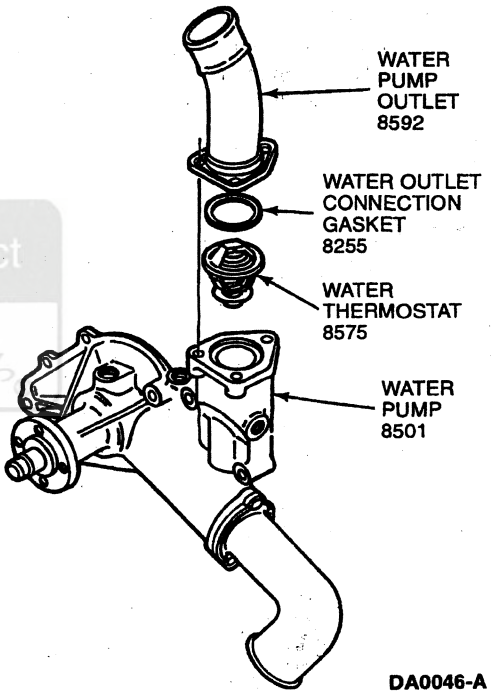

DA0046-A

Installation

1. Install the water thermostat and the water hose connection gasket in the water pump outlet.
2. Install the water pump outlet and install water pump outlet retaining screws. Tighten screws to 20 N·m (15 lb-ft).
3. Connect the upper radiator hose to the water pump outlet and install hose clamp.
4. Install the drive belt at the drive belt tensioner pulley.
5. Refill the engine cooling system. Refer to Section 03-03.

Ford Licensed Product
Ford Motor Company

REMOVAL AND INSTALLATION (Continued)

Water Pump

SPECIAL SERVICE TOOL(S) REQUIRED

Description	Tool Number
Fan Clutch Nut Wrench	T83T-6312-B
Fan Clutch Pulley Holder	T94T-6312-AH

Removal

1. Partially drain the engine cooling system.
2. Remove the upper radiator hose clamps and upper radiator hose (8260).
3. Disconnect the radiator coolant recovery reservoir hose at radiator (8005).
4. **CAUTION: Fan clutch has right-hand thread. Remove by turning nut counterclockwise.**

   Remove the fan and clutch assembly using Fan Clutch Nut Wrench T83T-6312-B and Fan Clutch Pulley Holder T94T-6312-AH. Set fan and clutch assembly in fan shroud (8146).

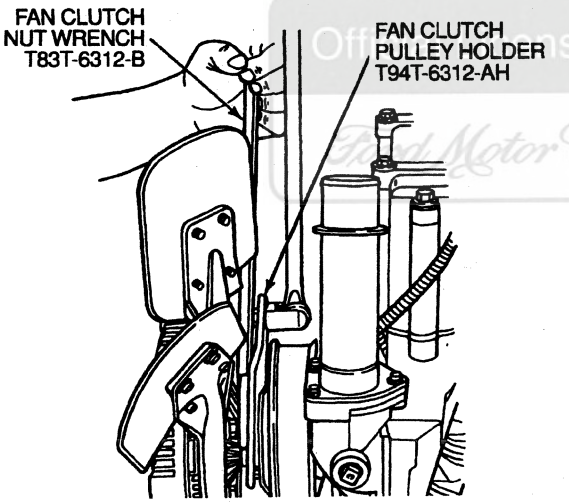

A23072-B

5. Remove the fan shroud screws.
6. Remove the fan shroud and fan and clutch assembly.
7. Loosen the water pump pulley bolts.
8. Remove the drive belt (8620). Refer to Section 03-05.
9. Remove the water pump pulley bolts and water pump pulley (8509).
10. Disconnect the engine coolant temperature sensor (ECT sensor)(12A648).
11. Disconnect the heater hose and clamp from water pump (8501).
12. Remove water pump bolts.
13. Remove water pump and water pump housing gasket (8507).
14. Clean gasket surfaces.

Installation

1. Install the water pump and water pump housing gasket.

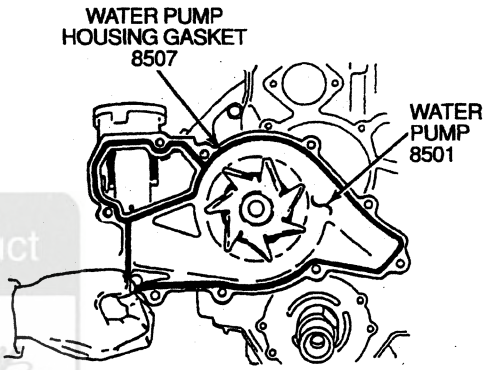

A23882-B

2. Install the water pump bolts and tighten bolts to 20 N·m (15 lb-ft).
3. Install the heater hose and clamp to the water pump.
4. Connect the engine coolant temperature sensor.
5. Install the water pump pulley and start the water pump pulley bolts.
6. Install the drive belt. Refer to Section 03-05.
7. Tighten the water pump pulley bolts to 16-24 N·m (12-18 lb-ft).
8. Install the fan shroud, and fan and clutch assembly.
9. Install the fan shroud screws. Tighten screws to 5-8 N·m (44-71 lb-in).

Off-Licensed Product
Ford Motor Company

REMOVAL AND INSTALLATION (Continued)

10. **CAUTION: Fan clutch has right-hand thread. Install by turning nut clockwise.**

    Install the fan and clutch assembly using Fan Clutch Nut Wrench T83T-6312-B and Fan Clutch Pulley Holder T94T-6312-AH.

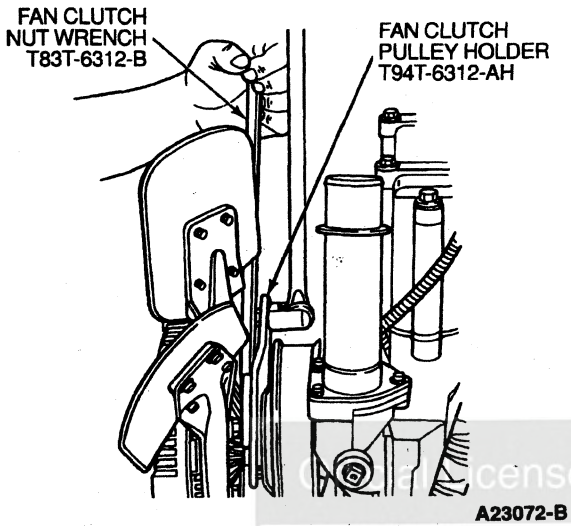

11. Install the radiator coolant recovery reservoir hose to radiator.
12. Install the upper radiator hose and clamps.
13. Refill the engine cooling system. Refer to Section 03-03.

Crankshaft Damper

SPECIAL SERVICE TOOL(S) REQUIRED

Description	Tool Number
Fan Clutch Nut Wrench	T83T-6312-B
Fan Clutch Pulley Holder	T94T-6312-AH
Flywheel Holding Tool	T74P-6375-A
Damper Remover/Replacer Tool	T79T-6316-A
Driver/Puller Screw	T79T-6316-A1
Damper Remover	T79T-6316-A2
Adapter	T79T-6316-A3
Driver Sleeve	T79T-6316-A4

(Continued)

SPECIAL SERVICE TOOL(S) REQUIRED (Cont'd)

Description	Tool Number
Damper Service Set	T94T-6379-AH
Damper Wear Ring Remover	T94T-6379-AH1
Damper Wear Ring Replacer	T94T-6379-AH2
Damper/Remover/Replacer Adapter	T94T-6379-AH3
Bearing Collet Sleeve	T77F-7025-C
Remover Tube	T77J-7025-B
Forcing Screw	T84T-7025-B
Driver Handle	T80T-4000-W

Removal

1. Drain the engine cooling system. Refer to Section 03-03.
2. Remove the upper radiator hose clamps and upper radiator hose (8260).
3. Disconnect the radiator coolant recovery reservoir hose at radiator (8005).
4. **CAUTION: Fan clutch has right-hand thread. Remove by turning nut counterclockwise.**

   Remove the fan and clutch assembly using Fan Clutch Nut Wrench T83T-6312-B and Fan Clutch Pulley Holder T94T-6312-AH. Set fan and clutch assembly in fan shroud (8146).
5. Remove the fan shroud screws.
6. Remove the fan shroud, and the fan and clutch assembly.
7. Disconnect the lower radiator hose (8286) from the radiator.
8. Remove the four radiator retaining bolts.
9. Disconnect the heater hose and transmission cooler hoses from the radiator (automatic transmission only).
10. Remove the radiator.
11. Raise vehicle.
12. Remove the flywheel housing cover attaching screws and flywheel housing cover (if equipped).
13. NOTE: To prevent the crankshaft (6303) from rotating, use a breaker bar for in-vehicle service or Flywheel Holding Tool T74P-6375-A for bench overhaul.

    Remove crankshaft pulley bolt (6A340) and washer.

Ford Motor Company Licensed Product

REMOVAL AND INSTALLATION (Continued)

14. Remove crankshaft vibration damper (6316) using Damper Remover T79T-6316-A2 (Part of T79T-6316-A), Adapter Bolt (Part of Damper Remover / Replacer Adapter Set T94T-6379-AH3), and Adapter T79T-6316-A3 (Part of T79T-6316-A) or equivalent.

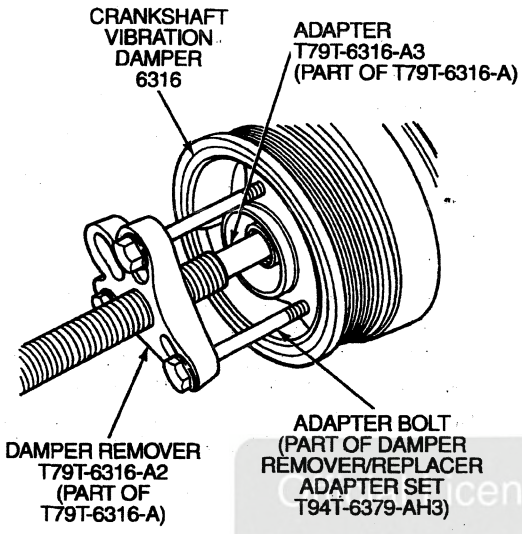

A23357-B

15. Remove crankshaft damper wear ring as follows:
    a. Assemble Step Plate Adapter D80L-630-A or equivalent, Damper Wear Ring Remover T94T-6379-AH1, Bearing Collet Sleeve T77F-7025-C, Remover Tube T77J-7025-B and Forcing Screw T84T-7025-B (not shown) to the crankshaft vibration damper as illustrated.
    b. Tighten forcing screw until crankshaft damper wear ring is pulled free from hub of crankshaft vibration damper.

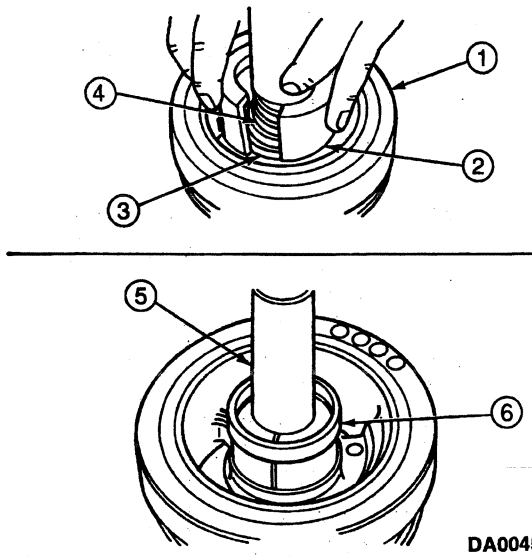

DA0045-A

Item	Part Number	Description
1	6316	Crankshaft Vibration Damper
2	T94T-6379-AH1	Damper Wear Ring Remover
3	6310	Crankshaft Damper Wear Ring
4	—	Step Plate Adapter (Part of D80L-630-A)
5	T77J-7025-B	Remover Tube
6	T77F-7025-C	Bearing Collet Sleeve

Ford Motor Company Confidential - Licensed Product

REMOVAL AND INSTALLATION (Continued)

Installation

1. Assemble Driver Handle T80T-4000-W to Damper Wear Ring Replacer T94T-6379-AH2. Insert crankshaft damper wear ring into Damper Wear Ring Replacer T94T-6379-AH2 and position tool assembly onto crankshaft vibration damper as shown. Use ballpeen hammer to seat crankshaft damper wear ring into hub of crankshaft vibration damper (apply Loctite® 271 to inside diameter of wear sleeve to prevent oil migration).

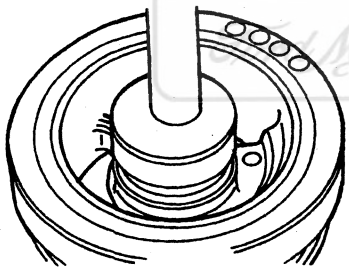
A23354-B

2. NOTE: A new crankshaft damper wear ring should be installed whenever the crankshaft vibration damper is removed. Refer to Oil Seal, Crankshaft — Front in the Removal and Installation portion of this section.

   NOTE: Apply RTV sealant to the crankshaft keyway prior to crankshaft vibration damper installation.

   Install the crankshaft vibration damper using Driver / Puller Screw T79T-6316-A1 (Part of T79T-6316-A), Driver Sleeve T79T-6316-A4 (Part of T79T-6316-A) and Thread Adapter (Part of T94T-6379-AH3).

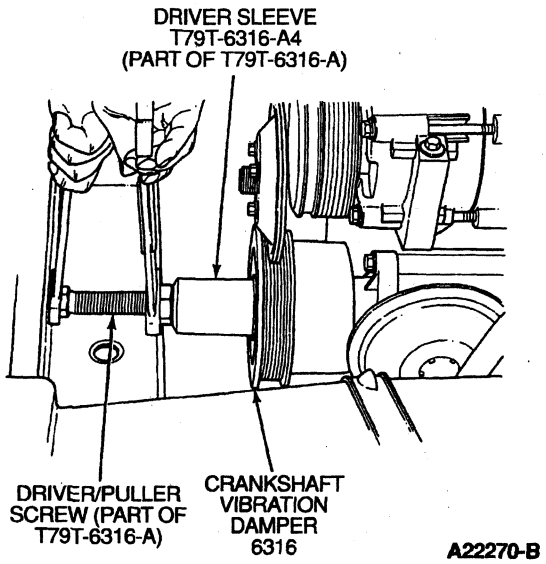

A22270-B

3. NOTE: To prevent the crankshaft from rotating, use a breaker bar for in-vehicle service or Flywheel Holding Tool T74P-6375-A for bench overhaul.

   Install the crankshaft pulley bolt and washer. Tighten crankshaft pulley bolt to 287 N·m (212 lb-ft).
4. Remove the flywheel holding tool.
5. Install the flywheel housing cover and screws. Tighten screws to 17-23 N·m (13-17 lb-ft).
6. Lower vehicle.
7. Install the radiator and the radiator lower retaining bolts. Tighten the retaining bolts to 24-34 N·m (18-25 lb-ft).
8. Connect the heater hose and transmission cooler hoses to the radiator (automatic transmission only).
9. Install the four radiator retaining bolts and tighten to 24-34 N·m (18-25 lb-ft).
10. Install the lower radiator hose to the radiator. Install hose clamp.
11. Install the fan shroud and the fan and clutch assembly.
12. Install the fan shroud retaining screws and tighten to 5-8 N·m (44-71 lb-in).
13. **CAUTION: Fan clutch has right-hand thread. Install by turning nut clockwise.**

    Install the fan and clutch assembly using Fan Clutch Nut Wrench T83T-6312-B and Fan Clutch Pulley Holder T94T-6312-AH.
14. Connect the radiator coolant recovery reservoir hose at radiator.
15. Install the upper radiator hose and hose clamps.
16. Refill the engine cooling system. Refer to Section 03-03.
17. Check and refill crankcase oil.

Official Licensed Product Ford Motor Company

REMOVAL AND INSTALLATION (Continued)

Oil Seal, Crankshaft — Front

SPECIAL SERVICE TOOL(S) REQUIRED

Description	Tool Number
Lube Tube Remover	T86P-70001-A
Impact Slide Hammer	T59L-100-B
Front Crank Seal Replacer	T94T-6700-AH
Thread Adapter	T94T-6379-AH3
Damper Removal/Replacer Tool	T79T-6316-A
Driver/Puller Screw	T79T-6316-A1
Driver Sleeve	T79T-6316-A4

Removal

1. Remove the crankshaft pulley (6312). Refer to Crankshaft Damper in the Removal and Installation portion of this section.
2. Using Lube Tube Remover T86P-70001-A and Impact Slide Hammer T59L-100-B, carefully remove the crankshaft front seal (6700).

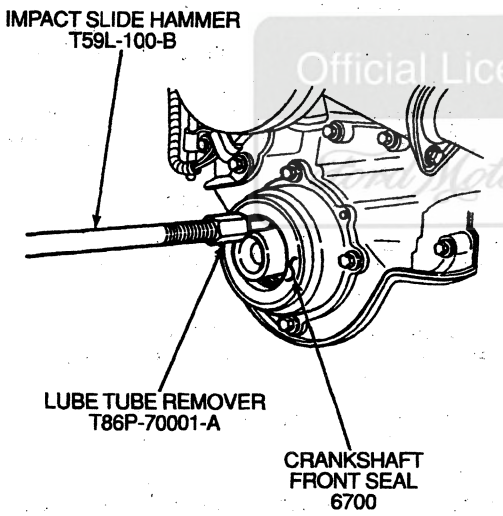

A23358-A

Installation

1. Throughly clean crankshaft front seal mounting surface.
2. Coat the new crankshaft front seal with Multi-Purpose Grease D0AZ-19584-AA or equivalent meeting Ford specification ESB-M1C93-A.
3. NOTE: It may be necessary to rotate Front Crank Seal Replacer T94T-6700-AH to align with crankshaft key (6B316).

   Install the crankshaft front seal using Front Crank Seal Replacer T94T-6700-AH, Thread Adapter T94T-6379-AH3, Driver Sleeve T79T-6316-A4 (Part of T79T-6316-A), and Driver/Puller Screw T79T-6316-A1 (Part of T79T-6316-A). Install crankshaft front seal until fully seated.

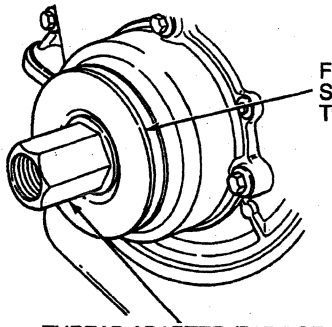

A23361-A

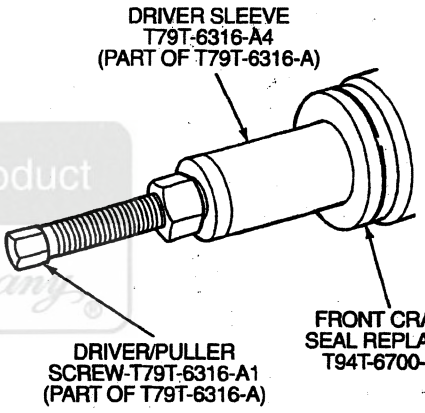

A23362-A

4. Install crankshaft damper. Refer to Crankshaft Damper in the Removal and Installation portion of this section.

Fuel Supply Pump

Removal

NOTE: The following procedure applies to both the 49-state and California vehicles (California fuel pump shown; 49-state fuel pump similar).

1. Remove turbocharger. Refer to Section 03-04D.

Official Licensed Product
Ford Motor Company

REMOVAL AND INSTALLATION (Continued)

2. Remove the fuel line banjo fitting bolt at fuel pump (9350).

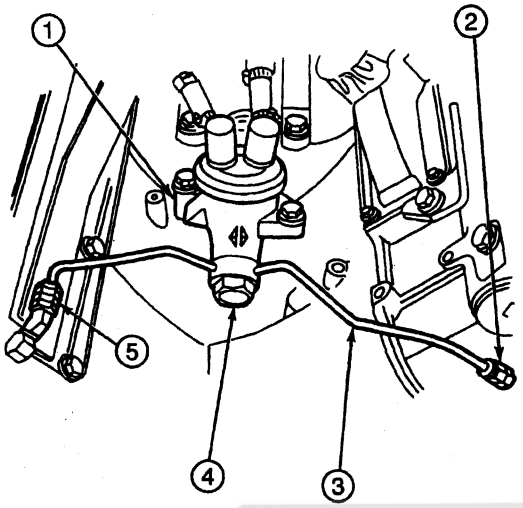

A22278-A

Item	Part Number	Description
1	9350	Fuel Pump
2	9B254	Fuel Line Fitting
3	9A564	Fuel Supply Line Assy
4	9R549	Banjo Bolt
5	9B253	Fuel Line Fitting

3. Disconnect the fuel line fittings at the rear of the cylinder heads (6049).
4. Remove the fuel line assembly.
5. Loosen the two hose clamps at the fuel pump fittings.
6. Disconnect the water drain hose at the fuel filter (9155).
7. Remove the fuel filter retaining bolts and position the fuel filter forward.
8. Remove the two fuel pump retaining bolts and lift the fuel pump up out of the camshaft bore.
9. Remove the fuel pump tappet from the camshaft bore.

Installation

1. Rotate the engine so the fuel pump cam eccentric is on the base circle to ease the installation and prevent possible damage to the fuel pump.
2. Replace the O-ring on the fuel pump base.
3. Install the fuel pump tappet in the base of the fuel pump.

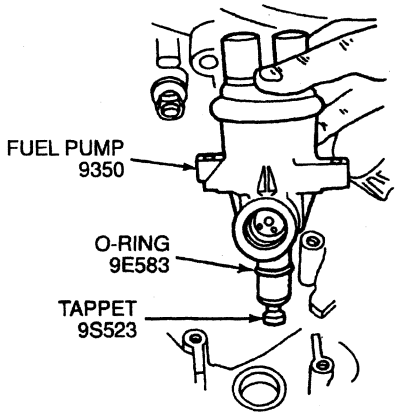

V9809-B

4. Install the fuel pump and retaining bolts. Tighten bolts evenly.
5. Install the fuel filter and connect the water drain hose.
6. Connect the two fuel hoses at the front of the fuel pump.
7. Tighten the fuel hose clamps.
8. Install the fuel filter retaining bolts.
9. Install the fuel line assembly with new seal rings at the rear of the fuel pump.
10. Loosely install the fuel line fittings at the rear of the cylinder heads.
11. Install the fuel line banjo fitting at the fuel pump. Tighten fitting to 55 N·m (40 lb-ft).
12. Tighten fuel line fittings at the rear of the cylinder head.
13. Install turbocharger. Refer to Section 03-04D.

Rocker Arm Cover, Rocker Arm and Push Rod, Right

Removal

1. Disconnect battery ground cables (14301).
2. Remove the generator retaining bolt and position the heater hose aside.
3. Remove the drive belt (8620). Refer to Section 03-05.
4. Disconnect the generator electrical connectors.
5. Remove the generator bracket retaining bolts.
6. Remove the generator bracket (10A313) (with generator (GEN)(10300) attached).
7. Remove the oil level indicator bracket bolts, bracket and oil level dipstick (6750).

Official Licensed Product Ford Motor Company

REMOVAL AND INSTALLATION (Continued)

8. **WARNING: RED-STRIPED WIRES CARRY 115 V DC. SEVERE ELECTRICAL SHOCK MAY BE RECEIVED. DO NOT PIERCE.**

   CAUTION: Do not pierce engine electrical wires or damage to the harness may occur.

   Disconnect the engine harness electrical connectors from the valve cover gasket (6584).

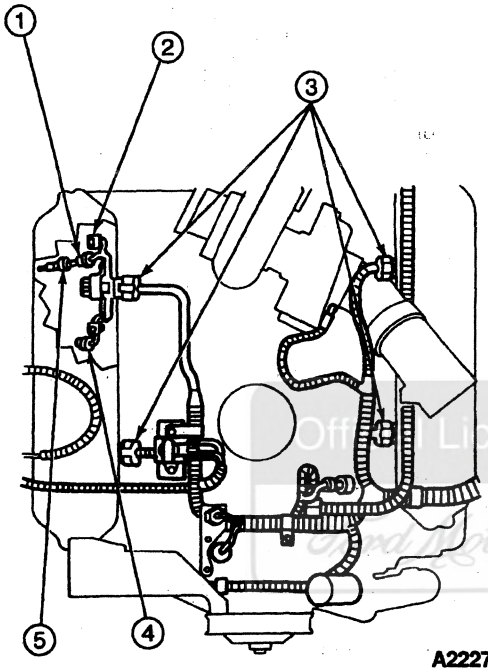

A22273-A

Item	Part Number	Description
1	—	Fuel Injector Connector (Part of 9D930)
2	—	Glow Plug Connector (Part of 9D930)
3	—	Fuel Injector and Glow Plug Electrical Connectors to Rocker Arm Cover Gasket (Part of 12A581)
4	12A342	Glow Plug
5	3802246	Fuel Injector

9. Remove the valve cover bolts and valve cover (6582).
10. Disconnect the electrical connectors from the fuel injector nozzle tip (9E527) and glow plugs.
11. Remove the valve cover gasket.
12. Remove the two rocker arm bolts (6A527).
13. Remove the rocker arm (6564) assembly.
14. Remove the push rod (6565).
15. NOTE: Be careful when removing the rocker arm snap retaining clip. Do not lose the rocker arm steel ball.

    Remove the snap retaining clip.
16. Remove the rocker arm and steel ball from the rocker arm pedestal.

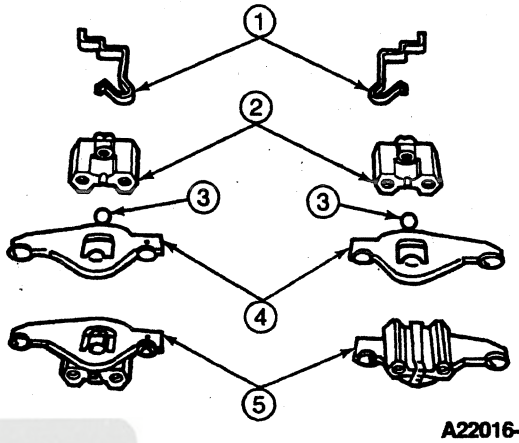

A22016-A

Item	Part Number	Description
1	—	Snap Retaining Clip (Part of 6564)
2	—	Rocker Arm Pedestal (Part of 6564)
3	—	Rocker Arm Ball (Part of 6564)
4	—	Rocker Arm (Part of 6564)
5	6564	Rocker Arm Assy

Installation

1. Assemble the intake rocker arm or exhaust rocker arm assembly as follows:
   a. Place the steel ball in the rocker arm cup and lubricate with clean engine oil.

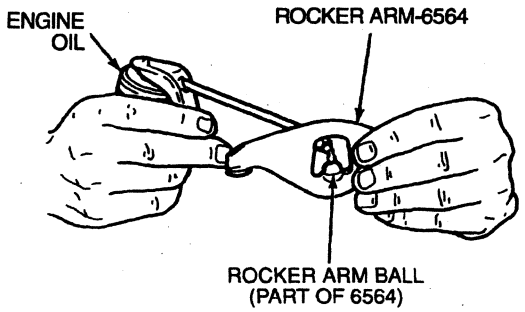

A22017-B

REMOVAL AND INSTALLATION (Continued)

b. Place the rocker arm pedestal on the steel ball

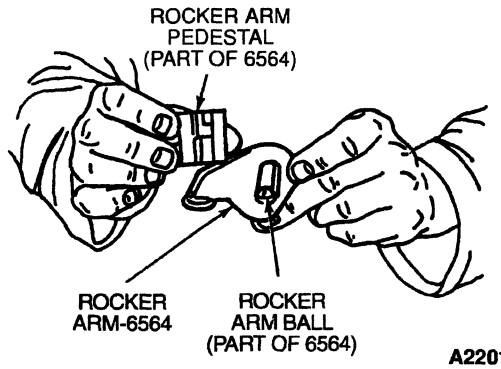

A22018-B

c. Snap the retaining clip over the rocker arm pedestal groove.

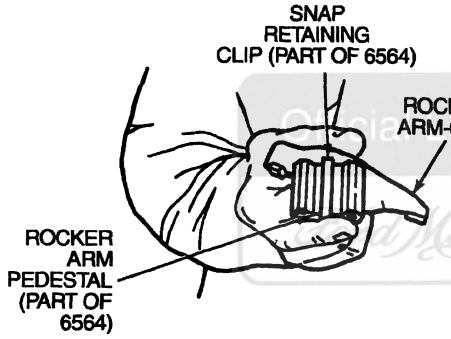

A22019-A

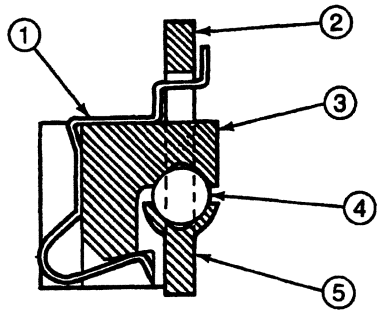

FRONT VIEW

A22020-A

Item	Part Number	Description
1	—	Snap Retaining Clip (Part of 6564)
2	—	Rocker Arm (Part of 6564)
3	—	Rocker Arm Pedestal (Part of 6564)
4	—	Rocker Arm Ball (Part of 6564)

(Continued)

Item	Part Number	Description
5	6564	Rocker Arm Assy

2. Lubricate the push rod ends with engine oil and install the push rod (copper end up).
3. **CAUTION: Failure to follow the next step of this procedure could result in bent valves, causing severe engine damage.**

   Rotate the engine until the mark on the crankshaft damper is at 11 o'clock to prevent valve damage when installing the intake rocker arm and exhaust rocker arm.
4. Install the push rods.
5. Install the intake rocker arm or exhaust rocker arm.
6. Install the two rocker arm bolts. Tighten rocker arm bolts evenly to 27 N·m (20 lb-ft).
7. Install the valve cover gasket.

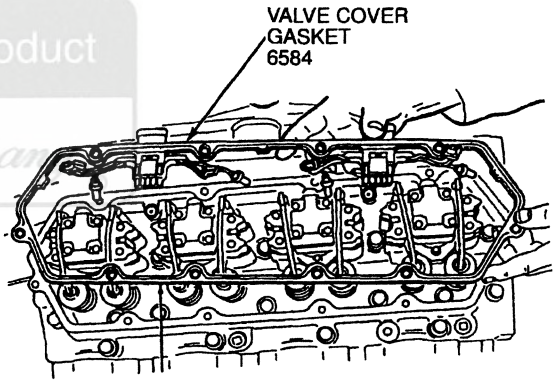

A22275-B

8. Connect the electrical connectors to the fuel injectors and glow plugs.
9. Install the valve cover and retaining bolts. Tighten bolts to 11 N·m (8 lb-ft).
10. Connect the engine harness electrical connectors to the valve cover gasket. Install the fuel injector harness clip.
11. Install the oil level indicator bracket, oil level dipstick and retaining bolts. Tighten bolts to standard torque specifications listed at the end of this section.
12. Install the generator bracket (with generator attached).
13. Install the generator bracket retaining bolts. Tighten bolts to 40-55 N·m (30-40 lb-ft).
14. Connect the generator electrical connectors.
15. Install the drive belt. Refer to Section 03-05.
16. Reposition the heater hose and install the generator retaining bolt. Tighten bolt to 40-55 N·m (30-40 lb-ft).

REMOVAL AND INSTALLATION (Continued)

17. NOTE: When the battery (10655) has been disconnected and reconnected, some abnormal drive symptoms may occur while the powertrain control module (PCM)(12A650) relearns its adaptive strategy. The vehicle may need to be driven 16 km (10 miles) or more to relearn the strategy.

    Reconnect battery ground cables.

Rocker Arm Cover, Rocker Arm and Push Rod, Left

Removal

1. Disconnect battery ground cables (14301).
2. Remove the intake duct tube assembly bolts and the clamps at the turbocharger and air cleaner. Remove the air inlet duct tube assembly.
3. Remove the intake duct bracket and retaining nuts.
4. Remove the vacuum pump hose at the vacuum pump (2A451).

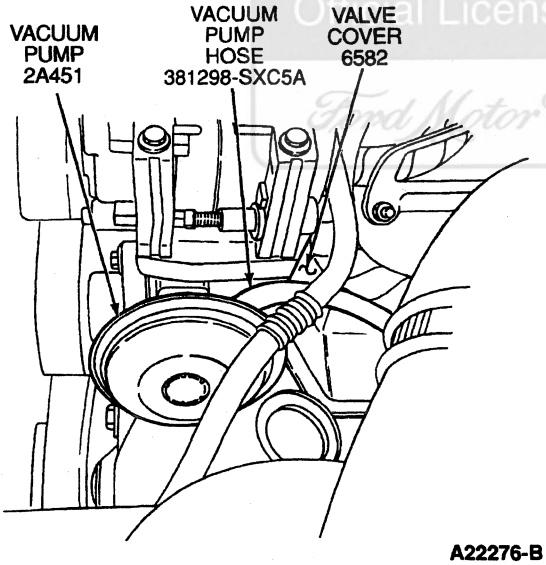

A22276-B

5. Remove the valve cover bolts.
6. Remove the valve cover (6582).
7. Disconnect the electrical connectors from the fuel injectors (9F593) and the glow plugs.
8. Disconnect the engine harness electrical connectors from the valve cover gasket (6584).
9. Remove the valve cover gasket.

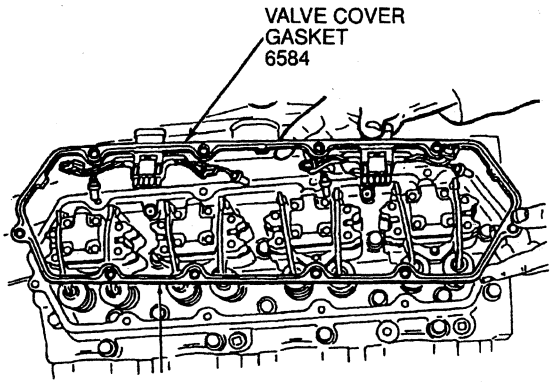

A22275-B

10. Remove the two rocker arm bolts (6A527).
11. Remove the intake rocker arm (6564) or exhaust rocker arm.
12. Remove the push rod (6565).
13. NOTE: Be careful when removing the rocker arm snap retaining clip. Do not lose the rocker arm steel ball.

    Remove the snap retaining clip.
14. Remove the rocker arm and steel ball from the rocker arm pedestal.

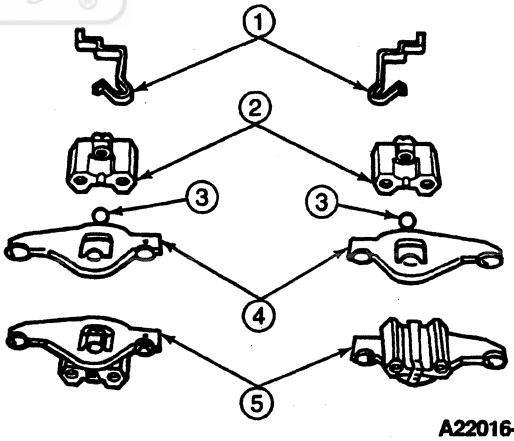

A22016-A

Item	Part Number	Description
1	—	Snap Retaining Clip (Part of 6564)
2	—	Rocker Arm Pedestal (Part of 6564)
3	—	Rocker Arm Ball (Part of 6564)
4	—	Rocker Arm (Part of 6564)
5	6564	Rocker Arm Assy

Official Licensed Product Ford Motor Company

REMOVAL AND INSTALLATION (Continued)

Installation

1. Assemble the intake rocker arm or exhaust rocker arm assembly as follows:
   a. Place the steel ball in the rocker arm cup and lubricate it with clean engine oil.

Steel Ball Assembly

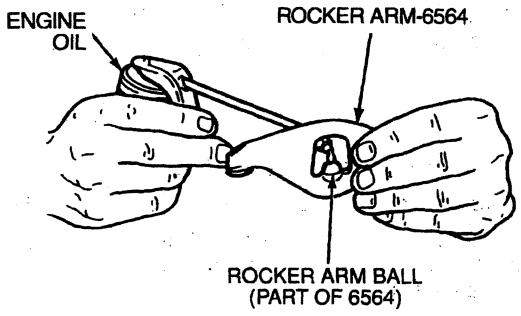

A22017-B

   b. Place the rocker arm pedestal on the steel ball.

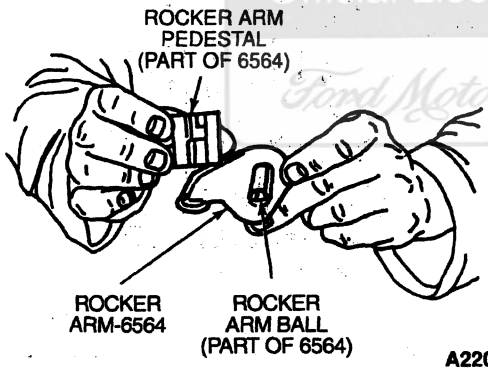

A22018-B

   c. Snap the retaining clip over the rocker arm pedestal groove.

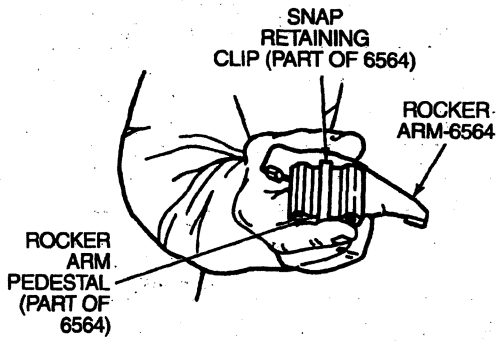

A22019-A

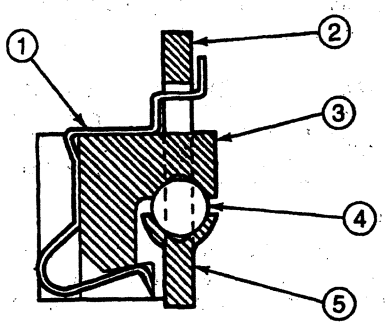

FRONT VIEW

A22020-A

Item	Part Number	Description
1	—	Snap Retaining Clip (Part of 6564)
2	—	Rocker Arm (Part of 6564)
3	—	Rocker Arm Pedestal (Part of 6564)
4	—	Rocker Arm Ball (Part of 6564)
5	6564	Rocker Arm Assy

2. Lubricate the push rod ends with engine oil and install the push rod (copper end up).
3. **CAUTION: Failure to follow the next step of this procedure could result in bent valves, causing severe engine damage.**
   Rotate the engine until the mark on the crankshaft damper is at 11 o'clock to prevent valve damage when installing the intake rocker arm and exhaust rocker arm.
4. Install push rods.
5. Install the intake rocker arm or exhaust rocker arm.
6. Install the two rocker arm bolts. Tighten rocker arm bolts evenly to 27 N·m (20 lb-ft).
7. Install the valve cover gasket.
8. Connect the engine harness electrical connectors to the valve cover gasket.
9. Connect the electrical connectors to the fuel injectors and glow plugs.
10. Install the valve cover and bolts. Tighten bolts to 11 N·m (8 lb-ft).
11. Connect the vacuum pump hose to the vacuum pump.
12. Install the intake duct bracket and the two retaining nuts.
13. Install the intake duct tube assembly, the two retaining bolts and the clamps at the turbocharger and air cleaner.
14. Connect battery ground cable.

Official Licensed Product Ford Motor Company

REMOVAL AND INSTALLATION (Continued)

Valve Spring, Valve Spring Retainer and Valve Stem Seal

SPECIAL SERVICE TOOL(S) REQUIRED

Description	Tool Number
Valve Spring Compressor	T94T-6513-AH

Removal

1. Remove the valve cover. Refer to Rocker Arm Cover, Rocker Arm and Push Rod, Left or Right, in the Removal and Installation portion of this section.
2. Remove the two rocker arm bolts (6A527) and the intake rocker arm (6564) or exhaust rocker arm.
3. Remove the push rod (6565).
4. Disconnect the glow plug electrical connector.
5. Bar the engine over until the piston of the cylinder to be serviced is at TDC.
6. Install Valve Spring Compressor T94T-6513-AH.

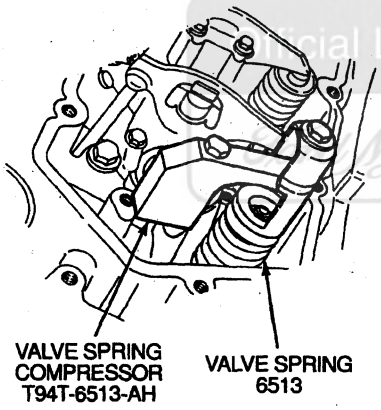

A23367-A

7. NOTE: It may be necessary to strike the valve stem end with a plastic-tipped hammer to loosen the valve spring retainer keys (6518).

   Remove Valve Spring Compressor T94T-6513-AH. Remove the valve spring retainer keys, rotator and the valve spring (6513).
8. Remove the valve stem seal (6571).

Installation

1. Install the valve stem seal.

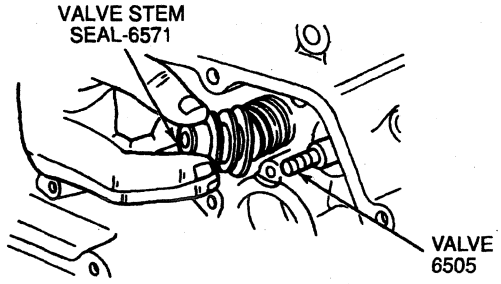

A22021-A

2. Install the valve spring and rotator.
3. Install Valve Spring Compressor T94T-6513-AH.
4. Compress the valve spring and install the valve spring retainer keys using Valve Spring Compressor T94T-6513-AH.

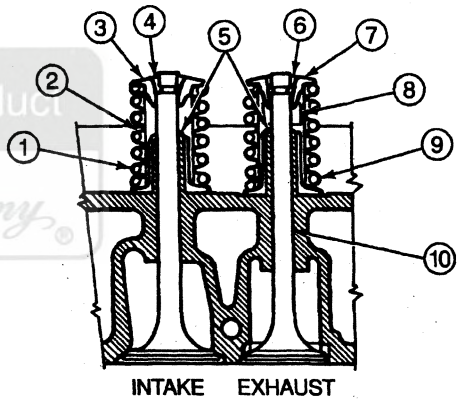

A22015-B

Item	Part Number	Description
1	6513	Valve Spring
2	6571	Valve Stem Seal
3	6514	Valve Spring Rotator
4	6518	Valve Spring Retainer Key
5	—	Valve Guide (Part of 6049)
6	6518	Valve Spring Retainer Key
7	6514	Valve Spring Rotator
8	6571	Valve Stem Seal
9	6513	Valve Spring
10	—	Valve Guide Bore (Part of 6049)

5. Remove Valve Spring Compressor T94T-6513-AH.
6. Lubricate the push rod ends with engine oil and install the push rod (copper end up).

Official Licensed Product Ford Motor Company

REMOVAL AND INSTALLATION (Continued)

7. **CAUTION: Failure to follow the next step of this procedure could result in bent valves, causing severe engine damage.**

   Rotate the engine until the mark on the crankshaft vibration damper (6316) is at 11 o'clock to prevent valve damage when installing the rocker arm assemblies.
8. Install the intake rocker arm or exhaust rocker arm and two rocker arm bolts. Tighten rocker arm bolts evenly to 27 N·m (20 lb-ft).
9. Install the valve cover. Refer to Rocker Arm Cover, Rocker Arm and Push Rod, Left or Right, in the Removal and Installation portion of this section.

Crankcase Breather Assembly

Removal

1. Remove the intake duct tube assembly bolts and the clamps at turbocharger and air cleaner. Remove the air inlet duct tube assembly.
2. Remove the two crankcase breather hose clamps and crankcase breather screws.
3. Remove the crankcase breather assembly.

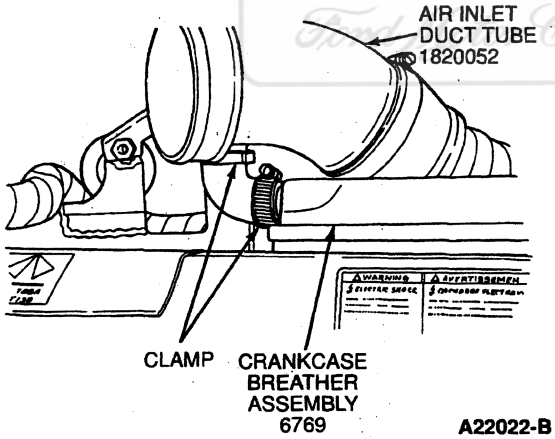

A22022-B

Installation

1. Position crankcase breather assembly.
2. Install the two crankcase breather screws, crankcase breather hose and clamps.
3. Install the air inlet duct tube assembly and the clamps at the turbocharger and air cleaner. Install the intake duct tube assembly bolts.

Intake Manifold Covers

Intake manifold covers should only be serviced for cylinder head reconditioning. Refer to Cylinder Head in the Disassembly and Assembly portion of this section.

Compressor Manifold and Hoses

Removal

1. Loosen the four intake manifold hose clamps and one clamp retaining the compressor manifold to the turbocharger.
2. Remove the compressor manifold.
3. Loosen the hose clamps and remove the intake manifold hoses.

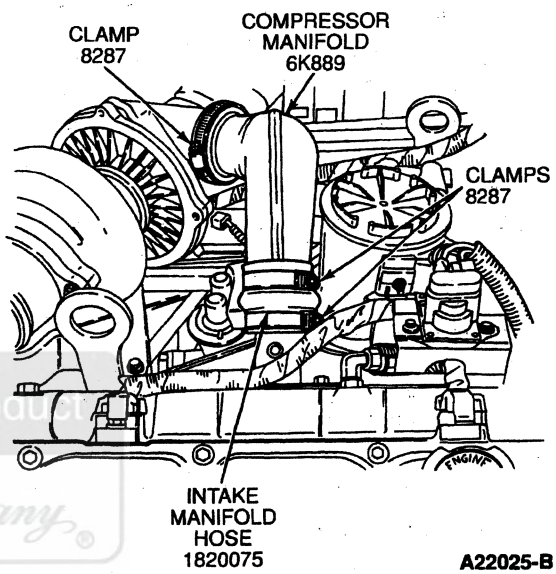

A22025-B

Installation

1. Install the intake manifold hoses on the intake manifold covers.
2. Install the compressor manifold.
3. Tighten the hose clamps and the marmon clamp at the turbocharger.

Valve Tappet

Removal

1. NOTE: Valve tappets (6500) should be kept in order so they can be installed in their original position. Inspect and test each valve tappet separately to prevent intermixing the valve tappets.

   Remove the appropriate cylinder head (6049). Refer to Cylinder Head, Left or Right, in the Removal and Installation portion of this section.
2. Remove the retaining bolts and the camshaft follower guide.

Ford Motor Company Official Licensed Product

REMOVAL AND INSTALLATION (Continued)

3. Remove the valve tappet.

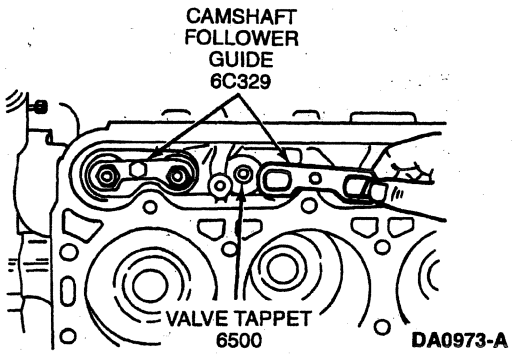

Installation

1. Lubricate valve tappet and valve tappet bores with recommended quality engine oil. Install valve tappet in its original location.
2. Position the camshaft follower guide and install the retaining bolts.
3. Install the cylinder head. Refer to Cylinder Head, Left or Right, in the Removal and Installation portion of this section.

Engine Front Cover

Removal

1. Remove the engine. Refer to Engine in the Removal and Installation portion of this section.
2. Remove the water pump (8501). Refer to Water Pump in the Removal and Installation portion of this section.
3. Remove the crankshaft vibration damper (6316). Refer to Crankshaft Damper in the Removal and Installation portion of this section.
4. Remove the oil pan (6675) and oil pump screen cover and tube (6622).
5. Remove the four engine front cover bolts.
6. Remove the engine front cover (6019) and the two engine front cover gaskets (6020).
7. Clean the engine front cover, oil pan and cylinder block mating surfaces.

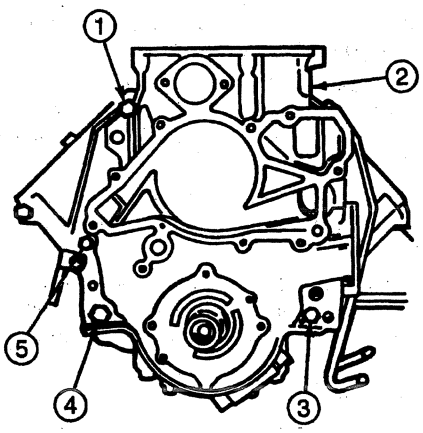

Item	Part Number	Description
1	—	Bolt (Part of 6019)
2	6019	Engine Front Cover
3	—	Bolt (Part of 6019)
4	—	Bolt (Part of 6019)
5	—	Bolt (Part of 6019)

Installation

1. NOTE: Silicone Rubber sealant starts to set up after being exposed to air. Assembly must be completed within 15 minutes of sealant application.

   Install the two new engine front cover gaskets and apply Silicone Rubber F4AZ-19562-B or equivalent meeting Ford specifications WSE-M4G323-A1 and ESE-M4G195-A to the sealing grooves in the engine front cover.

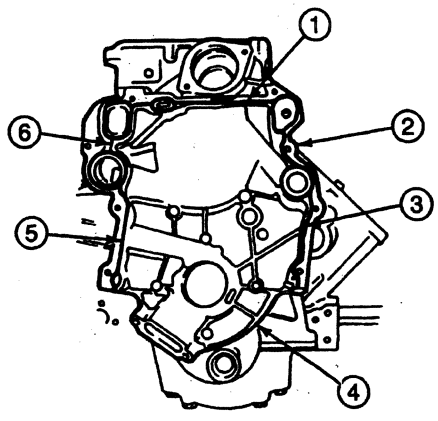

Item	Part Number	Description
1	F4AZ-19562-B	Silicone Rubber
2	6020	Engine Front Cover Gasket

(Continued)

Official Licensed Product
Ford Motor Company

REMOVAL AND INSTALLATION (Continued)

Item	Part Number	Description
3	F4AZ-19562-B	Silicone Rubber
4	6019	Engine Front Cover
5	F4AZ-19562-B	Silicone Rubber
6	6020	Engine Front Cover Gasket

2. Install the engine front cover and the four retaining bolts finger-tight.
3. Install the water pump.
4. Tighten the four engine front cover bolts to 20 N·m (15 lb-ft).
5. Install the oil pan and oil pump screen cover and tube.
6. Install the crankshaft vibration damper.
7. Install the engine.

Crankshaft Gear

The crankshaft gear is not serviced separately from the crankshaft (6303). Do not attempt to remove the crankshaft gear or damage to the crankshaft and crankshaft gear will occur.

Camshaft Drive Gear and Thrust Plate

Removal

1. Remove the engine (6007).
2. Remove the camshaft (6250). Refer to Camshaft in the Removal and Installation portion of this section.
3. Use a press to remove the camshaft gear from the camshaft.
4. Remove the camshaft thrust plate (6269).
5. Remove the camshaft gear from the camshaft.
6. Visually inspect the camshaft gear. Refer to Drive Gears in the Cleaning and Inspection portion of this section.
7. Visually inspect the camshaft thrust plate for wear, cracks or distortion. Use a micrometer to measure camshaft thrust plate thickness. Refer to Specifications for correct value. Replace the camshaft thrust plate if not within specification, or if any wear or damage is found during inspection.

Installation

1. Clean the nose of the camshaft and install the camshaft thrust plate onto the camshaft.
2. Position the camshaft gear in the keyway on the camshaft.
3. Heat the camshaft gear in an oven to 260°C (500°F).
4. **WARNING: WEAR PROTECTIVE GLOVES TO HANDLE HOT GEARS. FAILURE TO DO SO WILL CAUSE SEVERE INJURY TO PERSONNEL.**

   CAUTION: The gear will be permanently distorted if overheated. The oven temperature should never exceed 260°C (500°F).

   Remove the camshaft gear from the oven and, while aligning the sprocket keyway with the camshaft gear key install the camshaft gear over the nose of the camshaft until fully seated against the camshaft thrust plate journal. Allow camshaft assembly to cool before installing into the engine.
5. Install the camshaft. Refer to Camshaft Installation in the Removal and Installation portion of this section.
6. Install the engine.

Camshaft

Removal

1. Remove the engine (6007).
2. NOTE: The camshaft (6250) can be removed without removing the cylinder heads (6049) and valve tappets (6500) if desired. Remove the rocker arms and push rods (6565) making sure to keep them in order for assembly. Rotate the engine on the engine stand until in the vertical position, tipped slightly back so the valve tappets will slide away from the camshaft. Rotate the camshaft three or four times to push the valve tappets away from the camshaft lobes.

   Before removing the camshaft, inspect camshaft sprocket backlash. Refer to Drive Gear Backlash (All Gears) in the Service Procedures portion of this section. Inspect camshaft sprocket end play. Refer to Section 03-00.
3. Remove the engine front cover (6019).
4. Remove the valve tappets.

Ford Motor Company Licensed Product

REMOVAL AND INSTALLATION (Continued)

5. Rotate the crankshaft (6303) to align the camshaft sprocket and crankshaft sprocket timing marks.

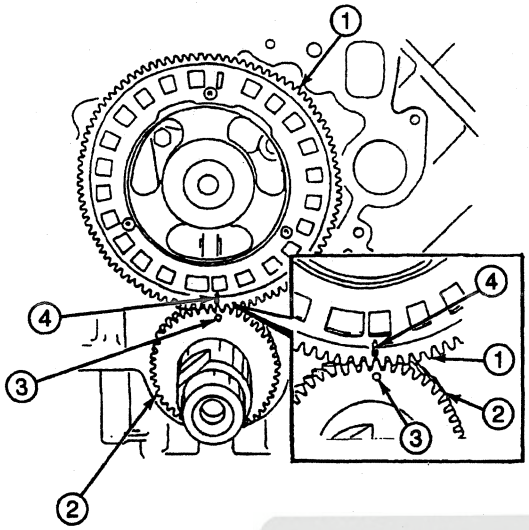

A23343-A

Item	Part Number	Description
1	6256	Camshaft Gear
2	6306	Crankshaft Gear
3	—	Crankshaft Gear Timing Mark (Part of 6306)
4	—	Camshaft Gear Timing Mark (Part of 6256)

6. Remove the camshaft thrust plate retaining bolts.

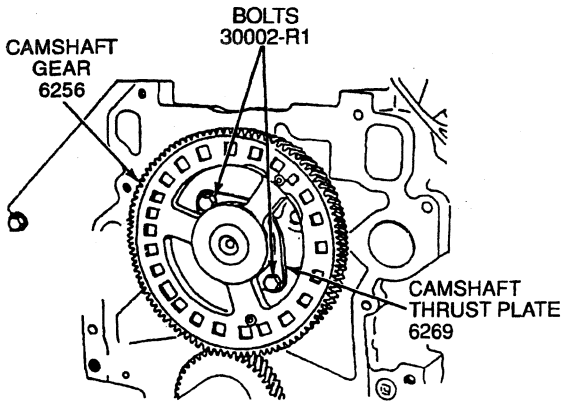

A22030-C

7. Remove the camshaft, camshaft gear and camshaft thrust plate (6269) as an assembly.
8. Inspect the camshaft lobes and journals. Refer to Section 03-00.

Installation

Before installing, coat the camshaft lobes with Multi-Purpose Grease DOAZ-19584-AA or equivalent meeting Ford specification ESB-M1C93-B. Lubricate the camshaft journals with diesel engine oil specified for this engine.

1. Carefully slide the camshaft, with the camshaft gear and camshaft thrust plate, down into the camshaft bearings (6A251). Make sure the camshaft gear and crankshaft gear timing marks are properly aligned after the camshaft is installed.

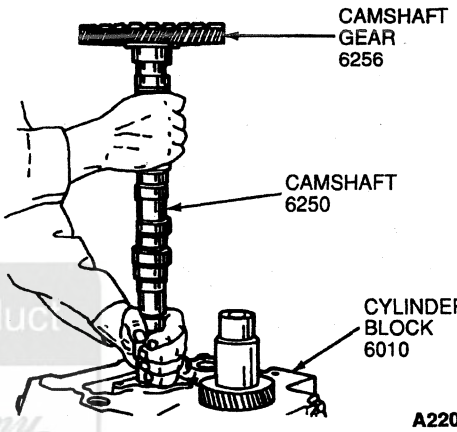

A22031-C

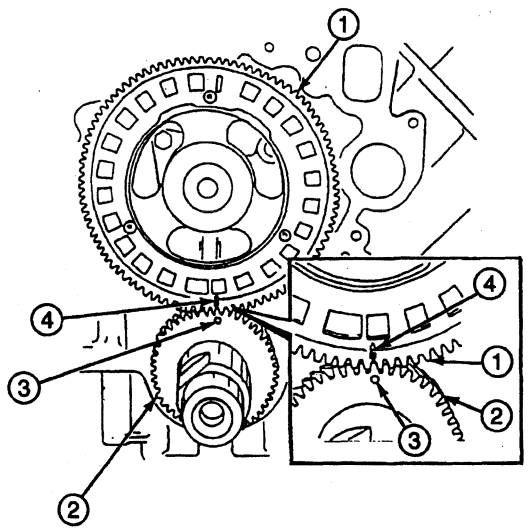

A23343-A

Item	Part Number	Description
1	6256	Camshaft Gear
2	6306	Crankshaft Gear
3	—	Crankshaft Gear Timing Mark (Part of 6306)

(Continued)

Official Licensed Product Ford Motor Company

REMOVAL AND INSTALLATION (Continued)

Item	Part Number	Description
4	—	Camshaft Gear Timing Mark (Part of 6256)

2. Install the camshaft thrust plate retaining bolts. Tighten bolts to the standard torque specification listed at the end of this section.
3. NOTE: If the camshaft was removed without removing the cylinder heads and valve tappets, install the rocker arms and push rods in their original order. Refer to Rocker Arm Cover, Rocker Arm and Push Rod, Right or Left, in the Removal and Installation portion of this section.

   Install the valve tappets.
4. Install the engine front cover.
5. Install the engine. Refer to Engine in the Removal and Installation portion of this section.

Camshaft Bearings

The camshaft bearings (6A251) are interchangeable from one bore to another except for the front camshaft bearing which is wider than the others.

SPECIAL SERVICE TOOL(S) REQUIRED

Description	Tool Number
Camshaft Bearing Set	T65L-6250-A

Removal

1. Remove engine from vehicle. Refer to Engine in the Removal and Installation portion of this section. Mount engine on a workstand using Rotunda Engine Mounting Brackets 014-00932 or equivalent.
2. **CAUTION: Use care when pushing pistons to top of cylinders to prevent damage to piston cooling oil jets (6C327). Use connecting rod installation guides (rubber hose) or equivalent to protect connecting rod bolts (6214).**

   Remove camshaft (6250), flywheel and crankshaft (6303). Push pistons to top of cylinders.
3. Using Camshaft Bearing Set T65L-6250-A, select proper size expanding collet and backup nut, and assemble on expanding mandrel. With expanding collet collapsed, install collet assembly in camshaft bearing, and tighten backup nut on expanding mandrel until collet fits camshaft bearing.

Camshaft Bearing Replacement, Typical

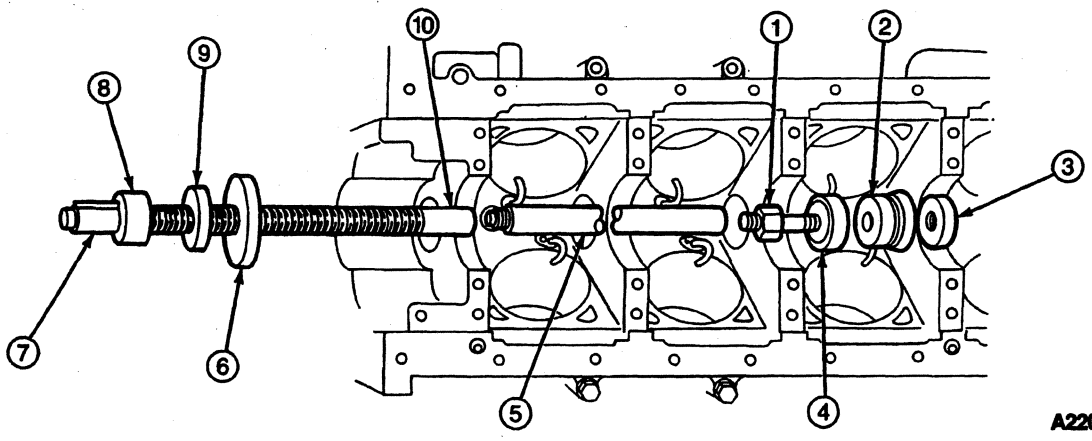

A22032-A

Item	Part Number	Description
1	—	Expanding Mandrel (Part of T65L-6250-A)
2	—	Expanding Collet (Part of T65L-6250-A)
3	—	Backup Nut (Part of T65L-6250-A)
4	6A251	Camshaft Bearing

(Continued)

Item	Part Number	Description
5	—	Puller Screw Extension (Part of T65L-6250-A)
6	—	Pulling Plate (Part of T65L-6250-A)
7	—	Puller Screw (Part of T65L-6250-A)
8	—	Pulling Nut (Part of T65L-6250-A)

(Continued)

REMOVAL AND INSTALLATION (Continued)

Item	Part Number	Description
9	—	Thrust Bearing (Part of T65L-6250-A)

(Continued)

Item	Part Number	Description
10	—	Puller Screw (Part of T65L-6250-A)

4. Assemble puller screw and extension, if necessary, and install on expanding mandrel. Wrap a cloth around threads of puller screw to protect front camshaft bearing or camshaft bearing bore. Tighten pulling nut against thrust bearing and pulling plate to remove camshaft bearing. Be sure to hold wrench on end of puller screw to prevent it from turning.
5. Repeat procedure for each camshaft bearing. To remove front camshaft bearing, install puller screw from rear of cylinder blocks (6010).

Installation

1. **CAUTION: Failure to use correct expanding collet can cause severe camshaft bearing damage. Be sure front camshaft bearing is installed the specified distance below front face of cylinder block.**

   Position new camshaft bearings at camshaft bearing bores with oil holes aligned, and press in place with Camshaft Bearing Set T65L-6250-A. Be sure to center pulling plate and puller screw to avoid damage to camshaft bearing.
2. Make sure each camshaft bearing oil hole aligns with oil hole in camshaft bearing bore. Use a length of wire to verify oil hole alignment.

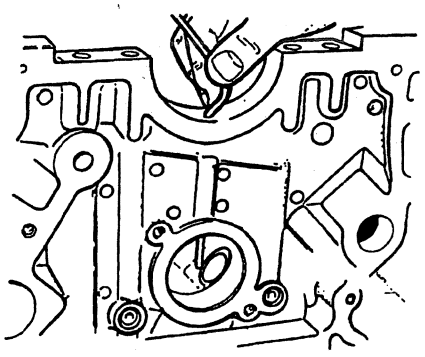

A23348-A

3. Install camshaft, crankshaft and flywheel (6375). It is not necessary to check connecting rod and main bearing clearances as a part of camshaft bearing replacement.
4. Install engine (6007) into vehicle.

Exhaust Manifold, Right

Removal

1. Disconnect the battery ground cable. On vehicles equipped with dual batteries, refer to Section 14-01.
2. Remove the transmission fill tube bracket bolts and rotate the transmission fill tube and bracket aside.
3. Raise the vehicle.
4. Remove the two bolts retaining the turbocharger exhaust inlet pipe to the exhaust manifold (9430).

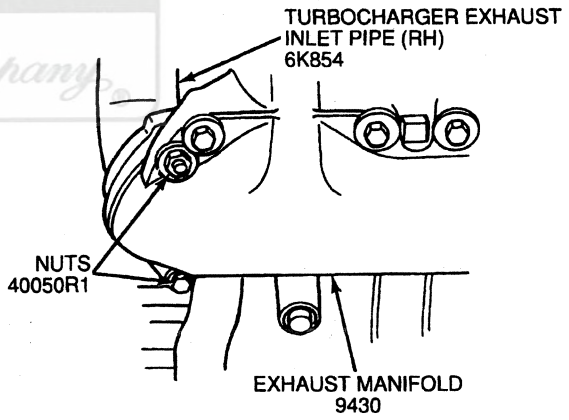

A22033-B

5. Remove the exhaust manifold bolts and exhaust manifold.
6. Clean the exhaust manifold mating surfaces.
7. Check surfaces for warpage with a straightedge. Refer to Specifications in this section.

Installation

1. Apply anti-seize compound to the exhaust manifold bolt threads.
2. Install exhaust manifold and retaining bolts.

Official Licensed Product

REMOVAL AND INSTALLATION (Continued)

3. Tighten the exhaust manifold bolts to 61 N·m (45 lb-ft).

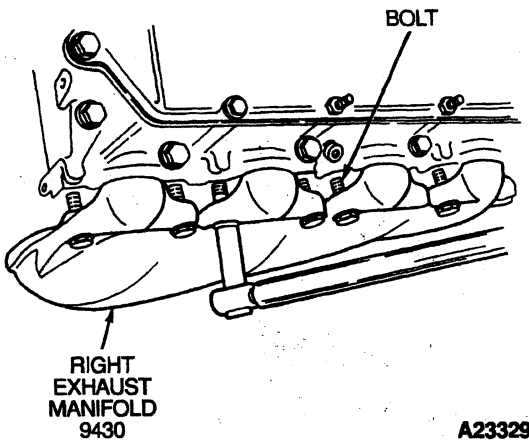

A23329-A

4. Install the bolts retaining the turbocharger exhaust inlet pipe to the exhaust manifold. Tighten the bolts to 28 N·m (21 lb-ft).
5. Lower the vehicle.
6. Rotate the transmission fill tube bracket into original position. Install bracket bolts. Tighten the bolts to standard torque specification listed at the end of this section.
7. NOTE: When the battery (10655) has been disconnected and reconnected, some abnormal drive symptoms may occur while the powertrain control module (PCM)(12A650) relearns its adaptive strategy. The vehicle may need to be driven 16 km (10 miles) or more to relearn the strategy.

   Reconnect the battery ground cable. On vehicles equipped with dual batteries, refer to Section 14-01.

Exhaust Manifold, Left

Removal

1. Disconnect the battery ground cable. On vehicles equipped with dual batteries, refer to Section 14-01.
2. Raise the vehicle.
3. Remove the bolts retaining the turbocharger exhaust inlet pipe to the exhaust manifold.

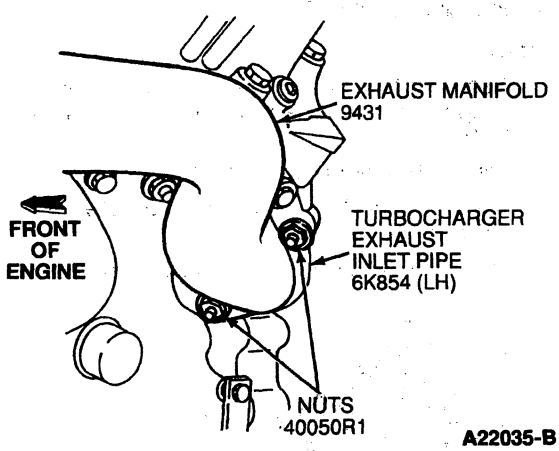

A22035-B

4. Remove the exhaust manifold bolts and exhaust manifold (9430).
5. Clean the exhaust manifold mating surfaces.
6. Check surfaces for warpage with straightedge. Refer to Specifications in this section.

Installation

1. Apply anti-seize compound to the exhaust manifold bolt threads.
2. Install exhaust manifold and retaining bolts. Tighten bolts to 61 N·m (45 lb-ft).

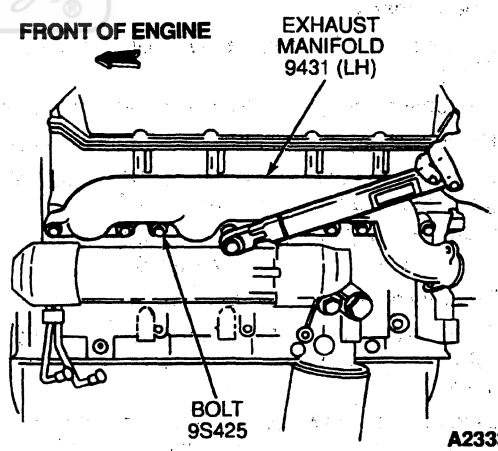

A23330-B

3. Install the bolts retaining the turbocharger exhaust inlet pipe to the exhaust manifold. Tighten the bolts to 49 N·m (36 lb-ft).
4. Lower the vehicle.
5. NOTE: When the battery (10655) has been disconnected and reconnected, some abnormal drive symptoms may occur while the powertrain control module (PCM)(12A650) relearns its adaptive strategy. The vehicle may need to be driven 16 km (10 miles) or more to relearn the strategy.

   Reconnect the battery ground cable. On vehicles equipped with dual batteries, refer to Section 14-01.

Ford Motor Company Licensed Product

REMOVAL AND INSTALLATION (Continued)

Cylinder Head, Right

Removal

1. Disconnect the battery ground cable. On vehicles equipped with dual batteries, refer to Section 14-01.
2. Drain the water fuel separator.
3. Disconnect the fuel supply lines from the rear of cylinder head (6049).
4. Drain the cooling system. Refer to Section 03-03.

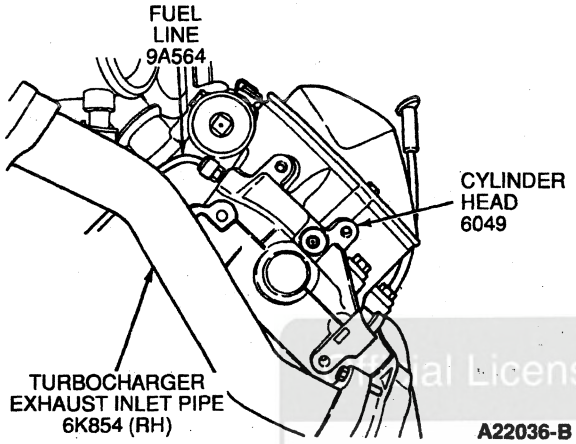

5. Remove one generator bolt and position the heater hose aside.
6. Remove the drive belt (8620). Refer to Section 03-05.
7. Disconnect the generator electrical connectors.
8. Remove the generator bracket retaining bolts.
9. Remove the generator bracket (10A313) (with generator (GEN)(10300) attached).
10. Remove the oil level indicator bracket bolts, bracket and oil level dipstick (6750).
11. Remove the oil level indicator tube.
12. Remove the manifold absolute pressure sensor (MAP sensor)(9F479) and screws. Position aside.
13. Disconnect the two engine harness electrical connectors from the valve cover gasket (6584).
14. Remove the valve cover bolts and valve cover (6582).
15. Disconnect the electrical connectors from the fuel injector nozzle tip (9E527) and glow plugs.
16. Remove the valve cover gasket.
17. Remove the high pressure oil line to the right cylinder head.

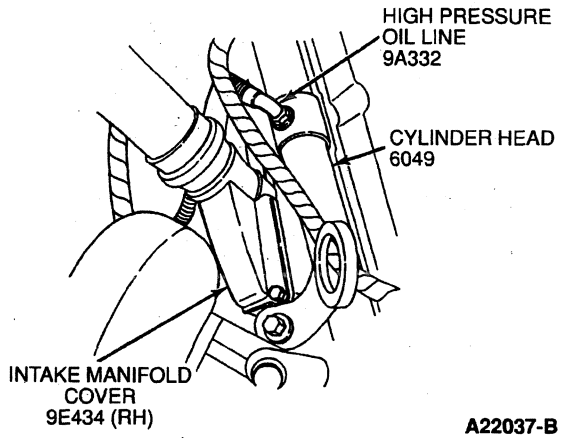

18. Remove the exhaust back pressure line.

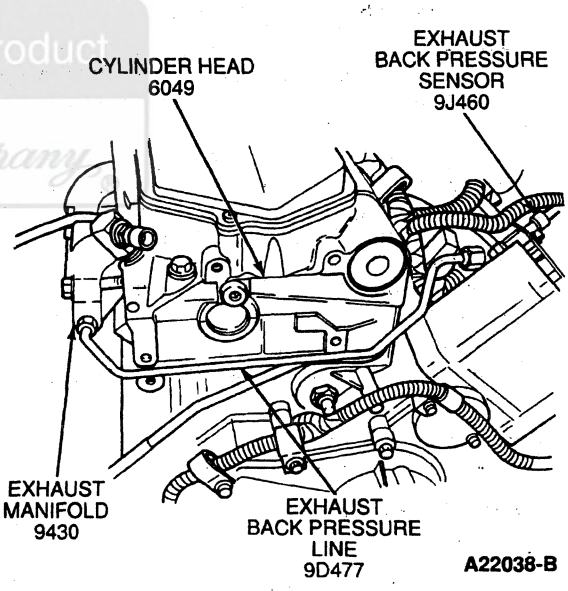

19. Remove the three glow plug relay bracket nuts and the ground wire.
20. Disconnect the heater hose from the right cylinder head.

Ford Motor Company Licensed Product

REMOVAL AND INSTALLATION (Continued)

21. Remove the heater plenum screws, nuts, and clip. Remove the outer half of heater plenum. Refer to Section 12-02 in the Body, Chassis Manual.

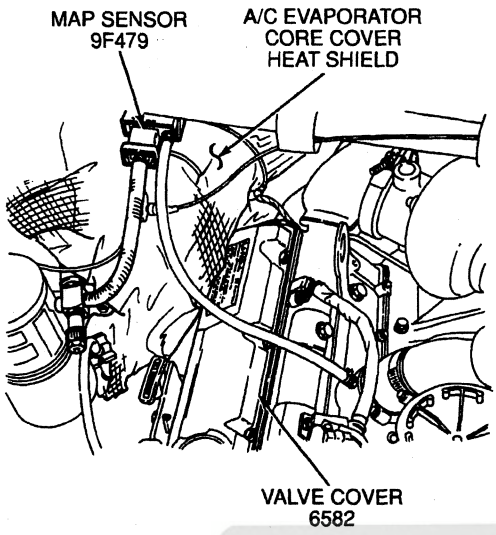

A22039-B

22. **CAUTION: Make sure to retrieve the fuel injector copper washer, located at the tip of the fuel injector, during removal.**

    NOTE: When removing the fuel injectors it is important that all three injector O-rings and the injector tip copper washer are retrieved from the injector bore.

    NOTE: If injector is to be replaced, refer to Section 03-04C for proper injector identification.

    Remove the fuel injectors. Refer to Section 03-04C.
23. Remove the rocker arms (6564) and push rods (6565).
24. Raise vehicle.
25. Remove exhaust manifold. Refer to Exhaust Manifold in the Removal and Installation portion of this section.
26. Lower vehicle.
27. Remove the ground strap bolt at the rear of the cylinder head.
28. Disconnect the fuel return line at the front of the cylinder head.
29. Remove the four inboard fuel injector shoulder bolts.
30. Remove the cylinder head bolts.
31. Install the Rotunda Cylinder Head Lifting Bracket 014-00932 or equivalent.

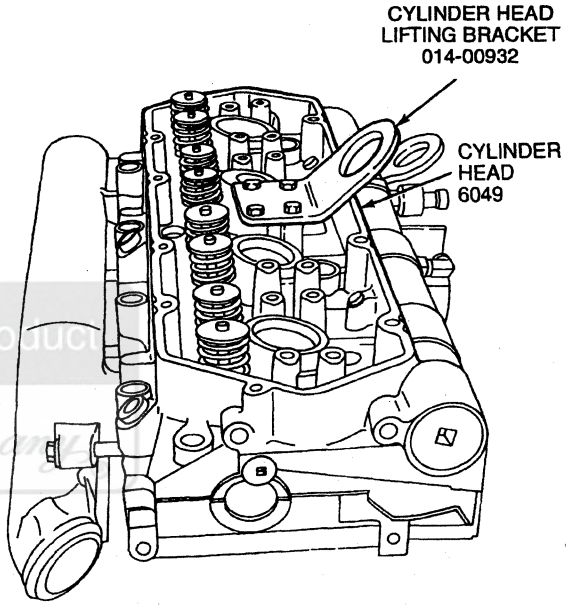

**LEFT-HAND SHOWN,
RIGHT-HAND SIMILAR**

A22042-C

32. Remove the cylinder head and head gasket (6051).

Official Licensed Product
Ford Motor Company

REMOVAL AND INSTALLATION (Continued)

Cylinder Head Removal

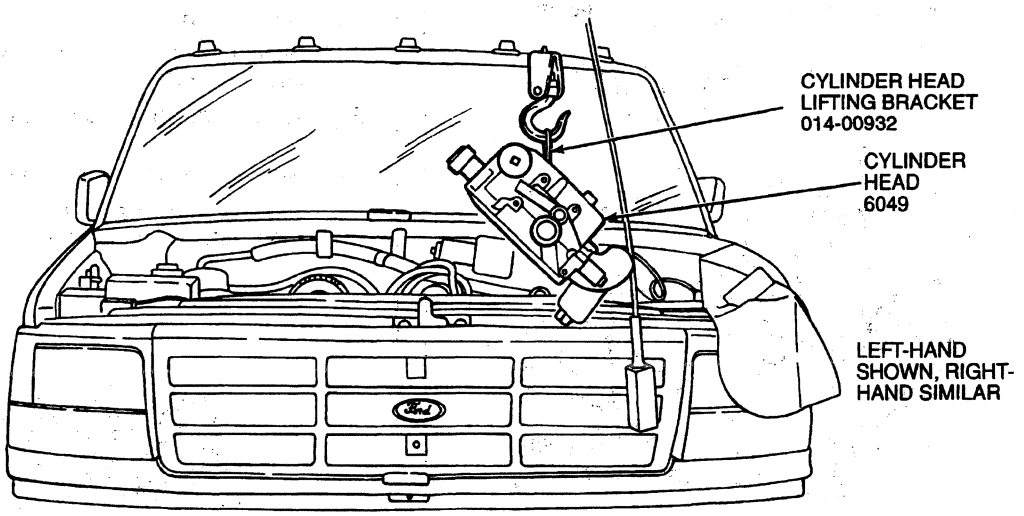

33. Clean the cylinder block mating surface.
34. Clean the cylinder head mating surface.
35. Inspect the cylinder head and cylinder block deck. Refer to Cylinder Heads, Inspection and Cylinder Head Flatness in the Cleaning and Inspection portion of this section.
36. To make sure the fuel injector O-rings seat properly, clean fuel injector bore using Rotunda Injector Sleeve Brush 014-00934 or equivalent. Clean any debris from fuel injector bore.

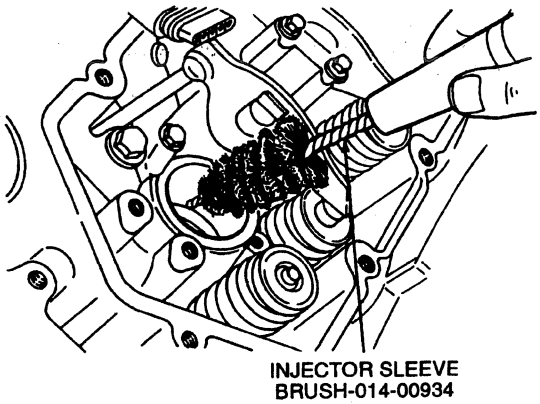

Installation

1. Install head gasket over dowel sleeves and onto the cylinder head surface.
2. Install the cylinder head. Do not damage the gasket.
3. Remove the Rotunda Cylinder Head Lifting Bracket 014-00932 or equivalent.
4. **CAUTION: Do not use too much engine oil on the threads or damage to the threads and poor sealing may result. Do not use anti-seize compound, grease or any other lubricants except engine oil on the cylinder head bolt threads because they will affect the true torque value reading of the bolts.**

   Lightly lubricate the cylinder head retaining bolt threads and flanges with clean engine oil.

Official Licensed Product Motor Company

REMOVAL AND INSTALLATION (Continued)

5. Install the cylinder head retaining bolts in sequence to the specified torque. Refer to the following illustration.

STEP 1 — 88 N•m (65 FT-LB)
STEP 2 — 115 N•m (85 FT-LB)

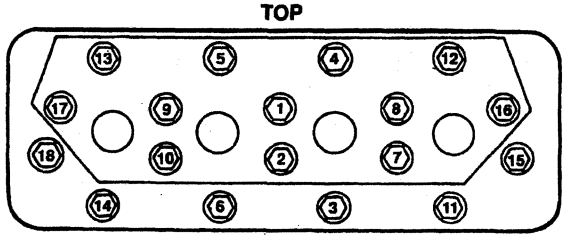

STEP 3 — 142 N•m (105 FT-LB)

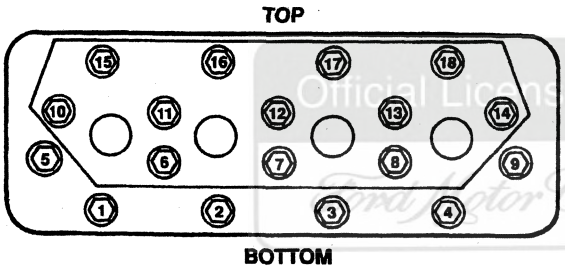

A22044-A

6. Install the four inboard fuel injector shoulder bolts. Tighten shoulder bolts to 12 N•m (9 lb-ft).
7. Connect the fuel return line at the front of the cylinder head.
8. Install the ground strap bolt at the rear of the cylinder head.
9. Install the exhaust manifold. Refer to Exhaust Manifold in the Removal and Installation portion of this section.
10. Install the fuel injectors. Refer to Section 03-04C.
11. **CAUTION: Failure to follow the next step of this procedure could result in bent valves, causing severe engine damage.**

    Rotate engine until the mark on the crankshaft vibration damper (6316) is at 11 o'clock to prevent valve damage when installing rocker arms.
12. Install the push rods (copper end up), rocker arms and rocker arm bolts (6A527). Tighten the rocker arm bolts to 27 N•m (20 lb-ft).
13. Install the oil rail drain plugs. Tighten oil rail drain plug to 6 N•m (53 lb-in).
14. Install the heater plenum, screws, nuts, and clip.
15. Install the heater hose at the right cylinder head.
16. Install the glow plug relay bracket, three nuts and ground wire.
17. Install the exhaust back pressure line.
18. Install the high-pressure oil supply line to the right cylinder head. Tighten oil supply fitting to 26 N•m (19 lb-ft).
19. Install the oil level indicator tube.
20. Install the oil level indicator tube bracket, bolts and oil level dipstick.
21. Install MAP sensor and screws.

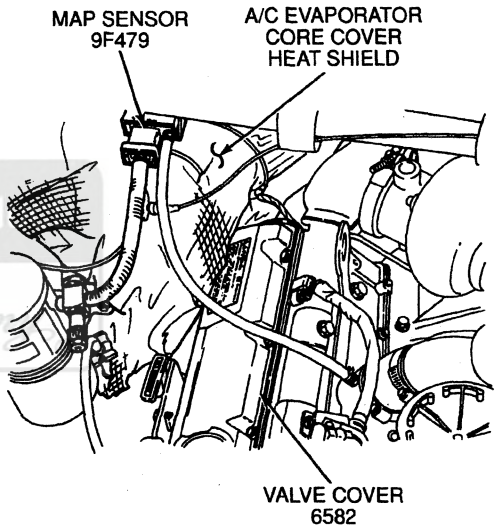

A22039-B

22. Install the valve cover gasket.
23. Connect electrical connectors to the fuel injectors (9F593) and glow plugs.
24. Install the valve cover and bolts. Tighten bolts to 11 N•m (8 lb-ft).
25. Connect the two electrical connectors to the valve cover gasket.
26. Install the generator bracket (with generator attached) and retaining bolts. Tighten the generator bracket bolts to 40-55 N•m (30-40 lb-ft).
27. Connect the generator electrical connectors.
28. Install the heater hose clip at the generator and install the generator retaining bolt. Tighten the bolt to 40-55 N•m (30-40 lb-ft).

Official Licensed Product Ford Motor Company

REMOVAL AND INSTALLATION (Continued)

29. Install the drive belt. Refer to Section 03-05.

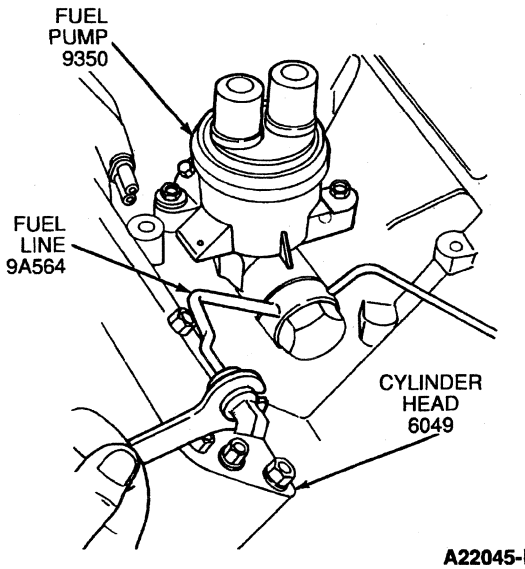

A22045-B

30. Install the fuel supply line to the rear of cylinder head.
31. Tighten the fuel supply line to the rear of cylinder head. Tighten the fittings to standard torque specification listed at the end of this section.
32. Refill the cooling system. Refer to Section 03-03.
33. NOTE: When the battery (10655) has been disconnected and reconnected, some abnormal drive symptoms may occur while the powertrain control module (PCM)(12A650) relearns its adaptive strategy. The vehicle may need to be driven 16 km (10 miles) or more to relearn the strategy.

    Reconnect the battery ground cable. On vehicles equipped with dual batteries, refer to Section 14-01.

Cylinder Head, Left

SPECIAL SERVICE TOOL(S) REQUIRED

Description	Tool Number
Injector Remover / Replacer Set	T94T-9000-AH
Injector Remover	T94T-9000-AH1
Injector Replacer	T94T-9000-AH2

Removal

1. Disconnect the battery ground cable. On vehicles equipped with dual batteries, refer to Section 14-01.
2. Recover refrigerant. Refer to Section 12-00 in the Body, Chassis Manual.
3. Remove the two crankcase breather screws and the crankcase breather.
4. Disconnect the air conditioning compressor electrical connectors.
5. Disconnect the vacuum hose at the brake vacuum pump (2A451).
6. Disconnect the air conditioning manifold lines from the A / C compressor (19703).
7. Remove the power steering lines from the power steering pump (3A674).
8. Remove the A / C compressor mounting bracket (2882) and accessories as an assembly.
9. Remove the valve cover bolts and the valve cover (6582).
10. Disconnect the electrical connectors from the valve cover gasket (6584).
11. Disconnect the electrical connectors from the fuel injectors (9F593) and glow plugs.
12. Remove the valve cover gasket.
13. Drain fuel filter / heater / water separator.
14. Drain the cooling system. Refer to Section 03-03.
15. Disconnect the fuel supply line from the rear of cylinder head (6049).

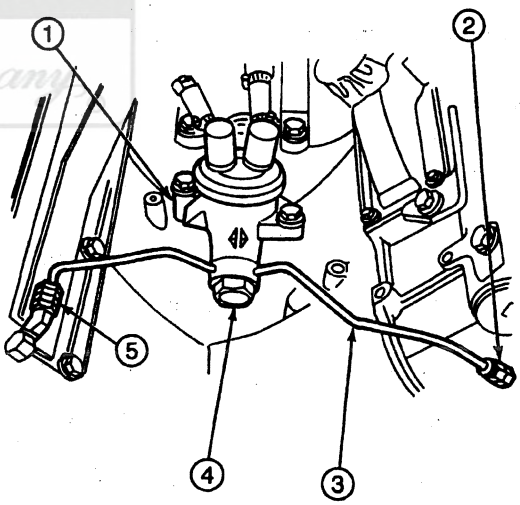

A22278-A

Item	Part Number	Description
1	9350	Fuel Pump
2	9B254	Fuel Line Fitting
3	9A564	Fuel Supply Line Assy
4	9R549	Banjo Bolt
5	9B253	Fuel Line Fitting

16. Remove the fuel line nut from the intake manifold stud.
17. Disconnect the fuel return line from the left cylinder head.

Official Licensed Product

REMOVAL AND INSTALLATION (Continued)

18. Remove the high pressure oil pump supply line from the left cylinder head.
19. Raise the vehicle.
20. Remove the exhaust manifold (9430). Refer to Exhaust Manifold in the Removal and Installation portion of this section.
21. Lower the vehicle.
22. Remove the fuel injectors. Refer to Section 03-04C.
23. Remove the rocker arm (6564) and push rods (6565).
24. Remove the upper air cleaner housing and zip tube.
25. Remove the main engine harness connectors in the left fender well and position harness assembly aside.
26. Remove the four inboard fuel injector shoulder bolts.
27. Remove the cylinder head bolts.
28. Install the Rotunda Cylinder Head Lifting Bracket 014-00932 or equivalent.

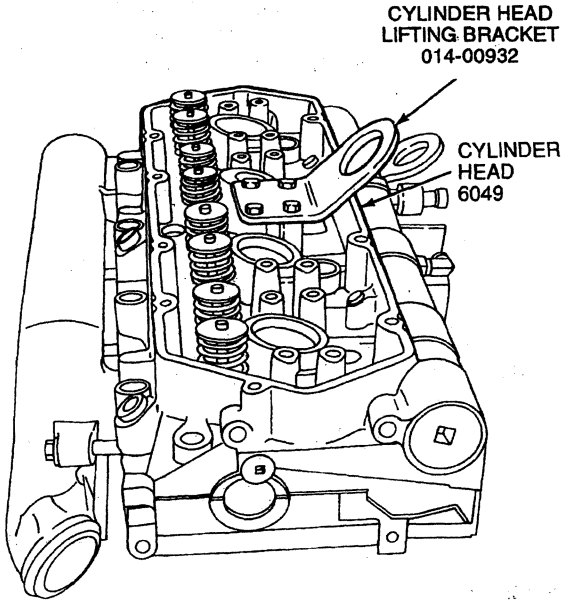

LEFT-HAND SHOWN, RIGHT-HAND SIMILAR

A22042-C

Official Licensed Product
Ford Motor Company

29. Remove the cylinder head and head gasket.

Cylinder Head Removal

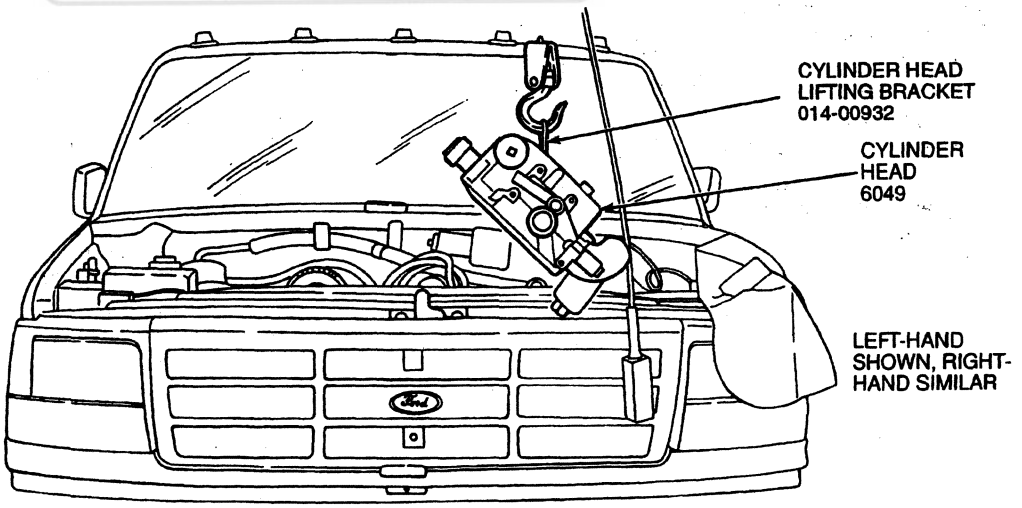

A22043-C

30. Clean the cylinder block mating surface.
31. Clean the cylinder head mating surface.
32. Inspect the cylinder head and cylinder block deck. Refer to Cylinder Heads, Inspection and Cylinder Head Flatness in the Cleaning and Inspection portion of this section.

REMOVAL AND INSTALLATION (Continued)

33. To make sure the fuel injector O-rings seat properly, clean fuel injector bore using Rotunda Injector Sleeve Brush 014-00934 or equivalent. Clean any debris from fuel injector bore.

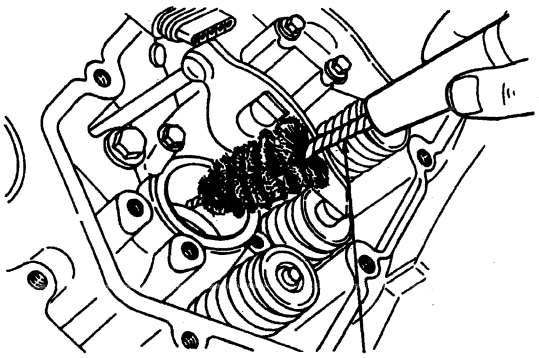

INJECTOR SLEEVE BRUSH-014-00934

A23341-B

Installation

1. Install head gasket over dowel sleeves and onto the cylinder head surface.
2. Install the cylinder head. Take care to not damage the head gasket.
3. **CAUTION: Do not use too much engine oil on the threads or damage to the threads and poor sealing may result. Do not use anti-seize compound, grease or any other lubricants other than engine oil on the cylinder head bolt threads. They will affect the true torque value reading of the bolts.**

   Lightly lubricate the cylinder head retaining bolt threads and flanges with clean engine oil.
4. Install the cylinder head retaining bolts in sequence and tighten to the specified torque in three steps. Refer to the following illustration.

STEP 1 — 88 N•m (65 FT-LB)
STEP 2 — 115 N•m (85 FT-LB)

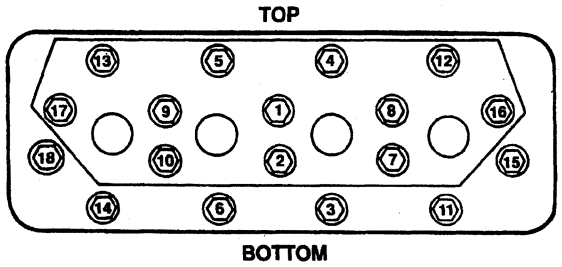

STEP 3 — 142 N•m (105 FT-LB)

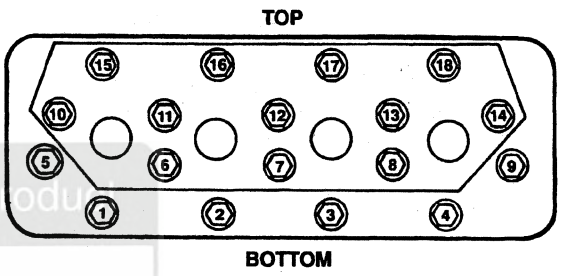

A22044-A

5. Remove the Rotunda Cylinder Head Lifting Bracket 014-00932 or equivalent.
6. Install the four inboard fuel injector hold-down bolts and tighten shoulder bolts to 12 N•m (9 lb-ft).
7. **CAUTION: Failure to follow the next step of this procedure could result in bent valves, causing severe engine damage.**

   Rotate the engine until the mark on the crankshaft vibration damper (6316) is at 11 o'clock to prevent valve damage when installing the rocker arm.
8. Install the rocker arms and push rods (copper end up). Tighten the rocker arm bolts (6A527) to 27 N•m (20 lb-ft).
9. Install the fuel injectors. Refer to Section 03-04C.
10. Install the valve cover gasket. Connect the electrical connectors.
11. Install the left valve cover and bolts. Tighten the bolts to 11 N•m (8 lb-ft).
12. Connect the engine wiring harness assembly connectors.
13. Install the upper air cleaner housing and zip tube.
14. Install the exhaust manifold. Refer to Exhaust Manifold in the Removal and Installation portion of this section.

Official Licensed Product

REMOVAL AND INSTALLATION (Continued)

15. Install the return fuel line block screws to the left cylinder head.
16. Connect the fuel return line to the front of the cylinder head.
17. Install the high-pressure oil pump supply line to the cylinder head.
18. Install the fuel line nut to the intake manifold stud.
19. Connect the fuel supply line at the rear of the cylinder head.
20. Install the A/C compressor mounting bracket and accessories as an assembly.
21. Install the power steering lines to the power steering pump.
22. Connect the air conditioning manifold lines to the A/C compressor.
23. Connect the vacuum pump hose to the vacuum pump.
24. Connect the air conditioning compressor electrical connectors.
25. Refill the cooling system. Refer to Section 03-03.
26. NOTE: When the battery (10655) has been disconnected and reconnected, some abnormal drive symptoms may occur while the powertrain control module (PCM)(12A650) relearns its adaptive strategy. The vehicle may need to be driven 16 km (10 miles) or more to relearn the strategy.

    Reconnect the battery ground cable. On vehicles equipped with dual batteries, refer to Section 14-01.

Flywheel

Removal

1. Remove the transmission from the vehicle. Refer to Section 07-01.
2. Remove the flywheel mounting bolts and the flywheel (6375).
3. Inspect flywheel. Refer to Transmission, Automatic under Flywheel Inspection in the Cleaning and Inspection portion of this section.

Installation

1. Position the flywheel on the crankshaft flange and install retaining bolts. Tighten bolts to standard torque specifications listed at the end of this section.
2. Install transmission into vehicle. Refer to Section 07-01.

Flywheel, Dual Mass

Removal

1. Remove the transmission (7003) and integral clutch housing. Refer to Section 07-03.
2. Remove the clutch pressure plate and disc. Refer to Section 08-01.
3. Remove two flywheel attaching bolts and install two guide studs to help support the flywheel during removal.
4. Remove the remaining seven flywheel attaching bolts, reinforcement ring and flywheel.

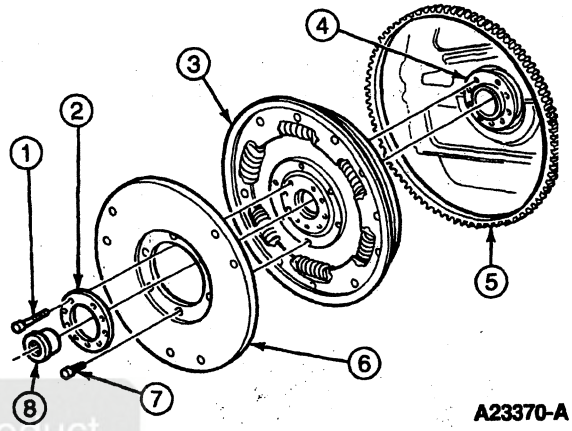

A23370-A

Item	Part Number	Description
1	6379	Flywheel Attaching Bolt (10 Req'd)
2	6A366	Flywheel Reinforcing Plate
3	6375	Primary Flywheel
4	—	Crankshaft Flange (Part of 6303)
5	6384	Flywheel Ring Gear
6	—	Secondary Flywheel (Part of 6477)
7	—	Secondary Flywheel Bolts with Washers (6 Req'd) (Part of 6477)
8	7600	Pilot Bearing

Installation

1. With the two guide studs installed, install the flywheel (6375).
2. Remove the two guide studs and install the remaining two flywheel attaching bolts. Tighten bolts to 121 N·m (89 lb-ft).
3. Install the clutch pressure plate and disc. Refer to Section 08-01.
4. Install the transmission and integral clutch housing. Refer to Section 07-03.

Ford Motor Company

REMOVAL AND INSTALLATION (Continued)

Engine Rear Cover

SPECIAL SERVICE TOOL(S) REQUIRED

Description	Tool Number
Driver Sleeve	T79T-6316-A4
Rear Crank Service Set	T94T-6701-AH
Crankshaft Seal Replacer	T94T-6701-AH3
Crankshaft Seal Replacer	T94T-6701-AH4

Removal

1. Remove the flywheel (6375). Refer to Flywheel in the Removal and Installation portion of this section.
2. Remove the two flywheel adapter housing retaining rings.

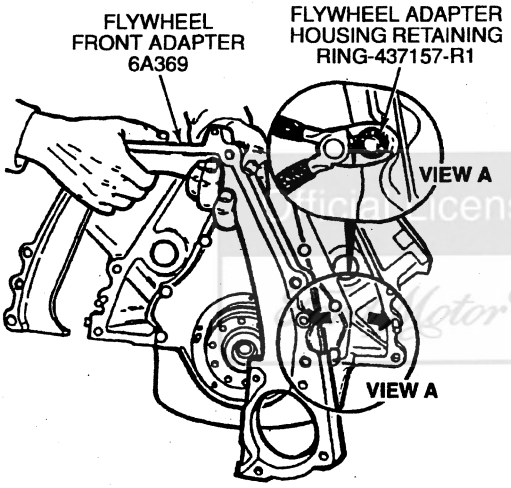

A22047-B

3. NOTE: Use extreme care when removing the flywheel front adapter (6A369) to prevent damage to the alignment dowel pins.

   Remove the flywheel front adapter.
4. Remove the five crankshaft rear oil seal retaining bolts and the crankshaft rear oil seal (6701).
5. Remove the eight engine rear cover retaining bolts.
6. **CAUTION: Be careful not to bend or twist engine rear cover during removal.**

   Carefully pry the engine rear cover away from the cylinder blocks (6010).

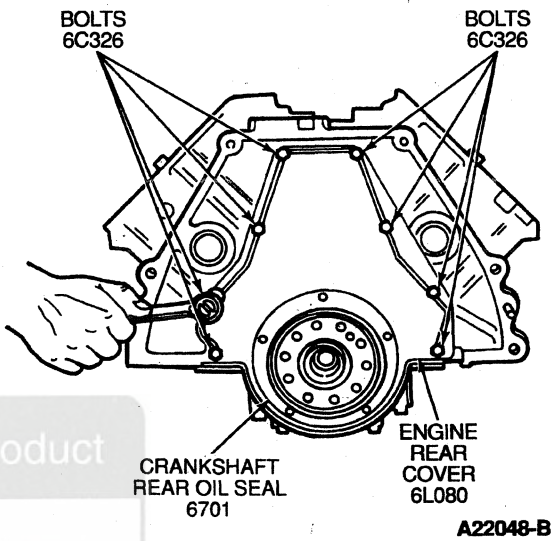

A22048-B

7. Clean the engine rear cover sealing surfaces.
8. Inspect the crankshaft rear oil seal, and alignment dowel pins for damage. Replace as necessary.

Installation

1. Apply Silicone Rubber F4AZ-19562-B or equivalent meeting Ford specification ESE-M4G195-A or WSE-M4G323-A to the engine rear cover sealing surfaces.
2. Install the engine rear cover and retaining bolts. Tighten bolts to 20 N·m (15 lb-ft).
3. Apply Silicone Rubber F4AZ-19562-B or equivalent meeting Ford specification ESE-M4G195-A or WSE-M4G323-A to the rear oil seal retaining ring and the five crankshaft rear oil seal retaining bolts.

Official Licensed Product Ford Motor Company

REMOVAL AND INSTALLATION (Continued)

4. Using Driver Sleeve T79T-6316-A4 and guide pins (part of T79T-6316-A), Crankshaft Seal Replacer T94T-6701-AH3, and Crankshaft Seal Replacer T94T-6701-AH4, install the crankshaft rear oil seal and the five crankshaft rear oil seal retaining bolts.

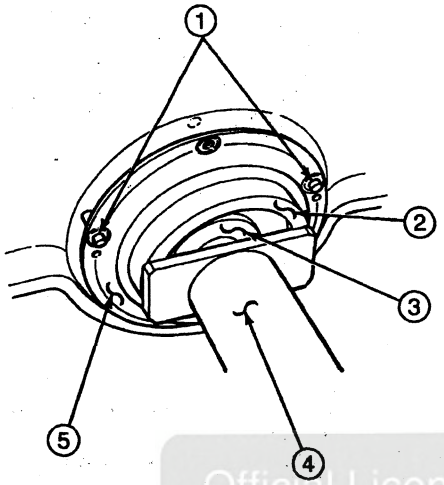

A23356-A

Item	Part Number	Description
1	—	Guide Pins (Part of T79T-6316-A)
2	T94T-6701-AH4	Crankshaft Seal Replacer
3	T94T-6701-AH3	Crankshaft Seal Replacer
4	T79T-6316-A4	Driver Sleeve
5	6701	Crankshaft Rear Oil Seal

5. Tighten crankshaft rear oil seal retaining bolts to standard torque specification listed at the end of this section.
6. Install the flywheel front adapter and two flywheel adapter housing retaining rings.
7. Install the flywheel. Refer to Flywheel in the Removal and Installation portion of this section.

Crankshaft Rear Oil Seal

SPECIAL SERVICE TOOL(S) REQUIRED

Description	Tool Number
Rear Crank Service Set	T94T-6701-AH
Rear Wear Ring Remover	T94T-6701-AH1

(Continued)

SPECIAL SERVICE TOOL(S) REQUIRED (Cont'd)

Description	Tool Number
Crankshaft Rear Wear Ring Remover Sleeve	T94T-6701-AH2
Crankshaft Seal Replacer	T94T-6701-AH3
Crankshaft Seal Replacer	T94T-6701-AH4
Forcing Screw	T84T-7025-B
Remover Tube	T77J-7025-B
Driver Sleeve	T79T-6316-A4

Removal

1. Remove the flywheel (6375). Refer to Flywheel or to Flywheel, Dual Mass in the Removal and Installation portion of this section.
2. Remove the five crankshaft rear oil seal retaining bolts and the crankshaft rear oil seal (6701).

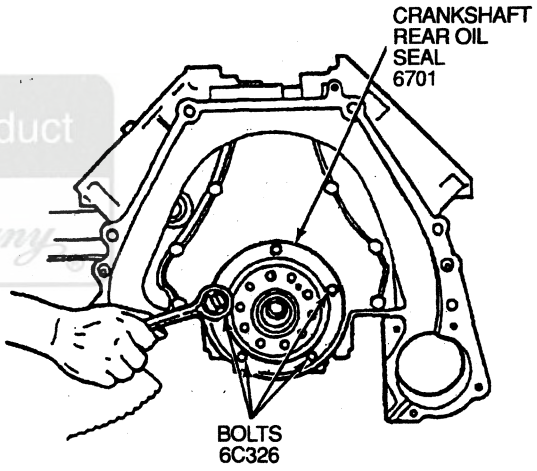

A22049-B

3. Clean the crankshaft rear oil seal sealing surfaces.
4. Inspect the crankshaft rear oil seal for damage. Replace as necessary.

Official Licensed Product
Ford Motor Company

REMOVAL AND INSTALLATION (Continued)

5. If equipped with a crankshaft wear sleeve, use Crankshaft Rear Wear Ring Remover T94T-6701-AH1, Forcing Screw T84T-7025-B, Remover Tube T77J-7025-B and Crankshaft Rear Wear Ring Remover Sleeve T94T-6701-AH2 to remove the crankshaft rear wear sleeve.

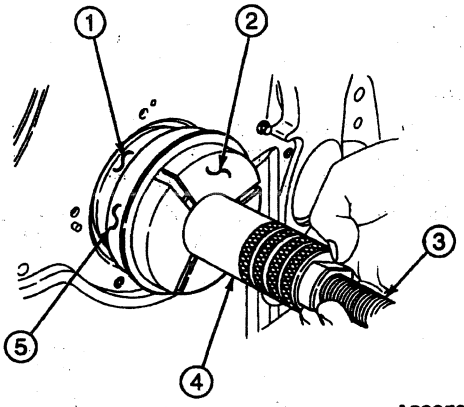

A23359-A

Item	Part Number	Description
1	—	Crankshaft Wear Ring (Part of 6701)
2	T94T-6701-AH1	Crankshaft Rear Wear Ring Remover
3	T84T-7025-B	Forcing Screw
4	T77J-7025-B	Remover Tube
5	T94T-6701-AH2	Crankshaft Rear Wear Ring Remover Sleeve (if Installed)

Installation

1. Apply Silicone Rubber F4AZ-19562-B or equivalent meeting Ford specification ESE-M4G195-A or WSE-M4G323-A1 to the rear oil seal retaining ring and five crankshaft rear oil seal retaining bolts.
2. Using Crankshaft Seal Replacer T94T-6701-AH3, Crankshaft Seal Replacer T94T-AH4 and if wear sleeve is to be replaced, Driver Sleeve T79T-6316-A4 and guide pins (part of T79T-6316-A), install crankshaft wear ring and crankshaft rear oil seal.

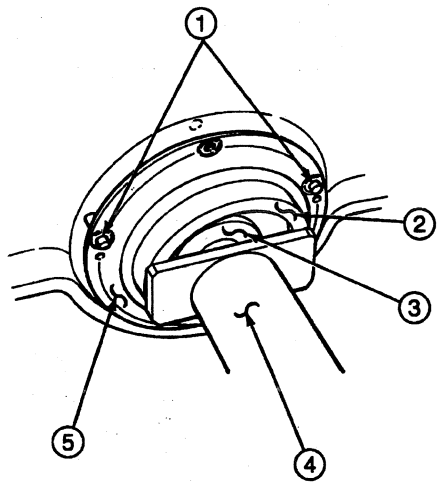

A23356-A

Item	Part Number	Description
1	—	Guide Pins (Part of T79T-6316-A)
2	T94T-6701-AH4	Crankshaft Seal Replacer
3	T94T-6701-AH3	Crankshaft Seal Replacer
4	T79T-6316-A4	Driver Sleeve
5	6701	Crankshaft Rear Oil Seal

3. Install the five crankshaft rear oil seal retaining bolts. Tighten bolts to standard torque specification listed at the end of this section.
4. Remove installation tools.
5. Install the flywheel.

Oil Pan and Oil Pump Screen Cover and Tube

Removal

1. Remove the engine assembly. Refer to Engine in the Removal and Installation portion of this section.

Official Licensed Product

REMOVAL AND INSTALLATION (Continued)

2. Remove the twelve oil pan retaining bolts.

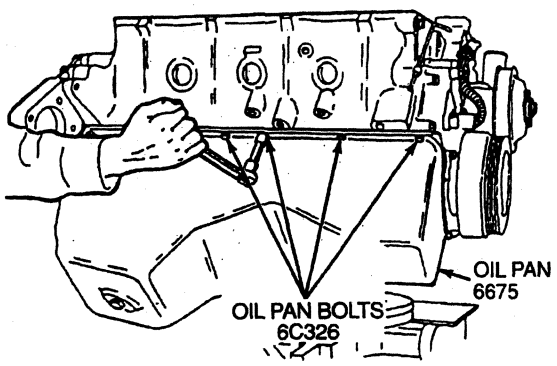

A22050-B

3. Use a gasket scraper to cut the RTV sealant on each side rail.
4. Pry up on one side of the oil pan (6675) to break the RTV seal at the engine front cover and engine rear cover and remove the oil pan.
5. Remove the oil pump screen cover and tube screws at the engine front cover and remove the nut retaining oil pump screen cover and tube (6622) to the crankshaft main bearing cap stud (6345).
6. Remove the oil pump screen cover and tube.

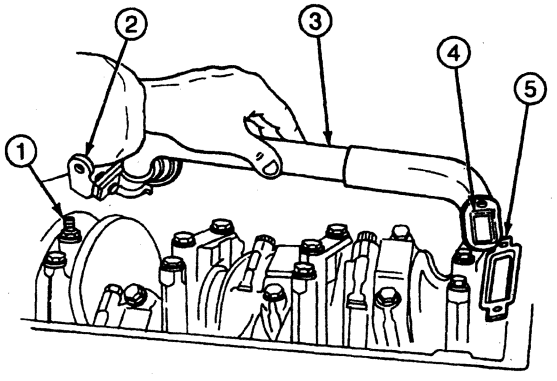

A23075-B

Item	Part Number	Description
1	6345	Crankshaft Main Bearing Cap Stud
2	6A661	Bracket, Oil Pump Screen Cover and Tube
3	6622	Oil Pump Screen Cover and Tube
4	6626	Oil Pump Inlet Tube Gasket
5	—	Mounting Flange (Part of 6B070)

7. Clean the oil pan mating surfaces and the oil pump screen cover and tube mating surfaces.
8. Inspect the oil pan and the oil pump screen cover and tube for damage.

Installation

1. **CAUTION: Do not apply excessive amounts of RTV that could enter into the oil lubrication system and cause a restriction.**

   Install oil pump screen cover and tube on oil pump screen cover and tube mounting flange. Use a small amount of RTV sealant to hold oil pump inlet tube gasket (6626) in place if necessary.
2. Install the oil pump screen cover and tube to the engine front cover and crankshaft main bearing cap stud.
3. Install the oil pump screen cover and tube retaining screws finger-tight.
4. Install the oil pump screen cover and tube retaining nut. Tighten nut to standard torque specification listed at the end of this section.
5. Tighten the oil pump screen cover and tube retaining screws to 24 N·m (18 lb-ft).
6. **CAUTION: Do not apply excessive amounts of RTV that could enter into the oil lubrication system and cause a restriction.**

   NOTE: Install oil pan and retaining bolts within 10 minutes of applying RTV sealant.

   Apply a 3.2-mm (1/8-inch) bead of Silicone Rubber F4AZ-19562-B or equivalent meeting Ford specification ESE-M4G195-A or WSE-M4G323-A1 to the crankcase oil pan flange on the inside of the oil pan bolt holes.
7. Apply a 6.35-mm (1/4-inch) bead of Silicone Rubber F4AZ-19562-B or equivalent meeting Ford specification ESE-M4G195-A or WSE-M4G323-A1 to the engine front and engine rear cover flange.

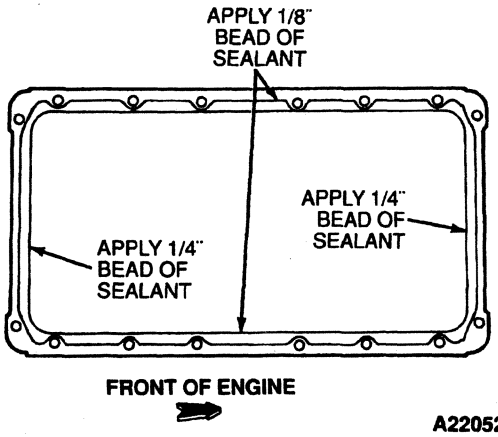

A22052-A

8. Install four temporary locating studs in the oil pan bolt holes.
9. Install the oil pan and eight retaining bolts finger-tight.

Off-Line Licensed Product
Ford Motor Company

REMOVAL AND INSTALLATION (Continued)

10. Remove the four temporary locating studs.
11. Install the remaining four oil pan bolts. Tighten bolts to standard torque specification listed at the end of this section.
12. Install the engine. Refer to Engine in the Removal and Installation portion of this section.

Oil Pump

SPECIAL SERVICE TOOL(S) REQUIRED

Description	Tool Number
Fan Clutch Nut Wrench	T83T-6312-B
Fan Clutch Pulley Holder	T94T-6312-AH
Damper Remover / Replacer Adapter Set	T94T-6379-AH3
Damper Remover / Replacer Tool	T79T-6316-A
Driver / Puller Screw	T79T-6316-A1
Damper Remover	T79T-6316-A2
Adapter	T79T-6316-A3
Driver Sleeve	T79T-6316-A4

Removal

1. Remove radiator (8005). Refer to Section 03-03.
2. Raise vehicle.
3. Remove flywheel inspection cover and screws.
4. NOTE: To prevent the crankshaft (6303) from rotating, use a breaker bar for in-vehicle service.
   Install flywheel holding tool.
5. Remove crankshaft pulley bolt (6A340).
6. Remove crankshaft vibration damper (6316) using Damper Remover T79T-6316-A2 (part of T79T-6316-A), Adapter Bolts (part of Damper Remover / Replacer Adapter Set T94T-6379-AH3), and Adapter T79T-6316-A3 (part of T79T-6316-A).

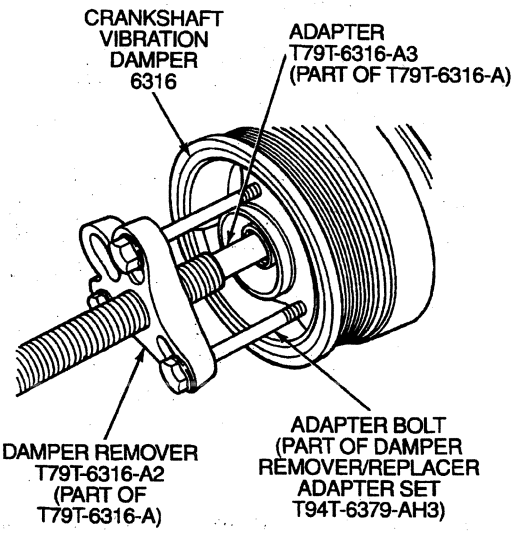

A23357-B

7. Remove four oil pump housing bolts.

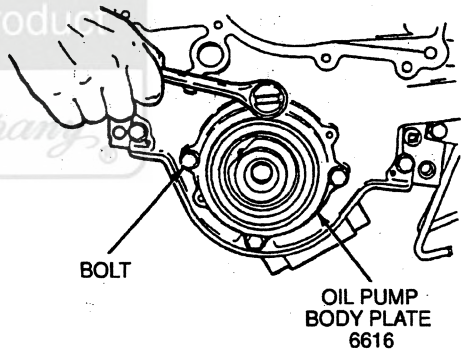

A22053-A

8. Remove oil pump housing and square cut O-ring.
9. Remove inner and outer gerotors.

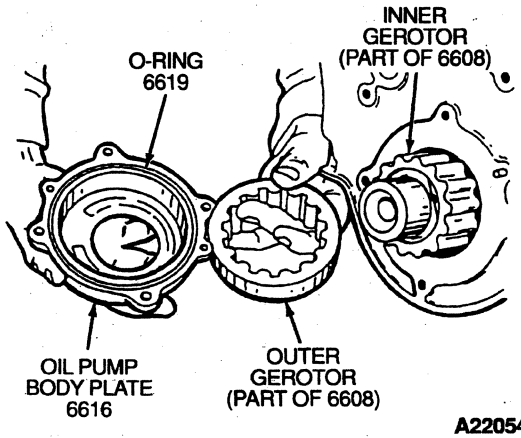

A22054-B

10. Clean oil pump assembly.

Ford Motor Company

REMOVAL AND INSTALLATION (Continued)

11. Inspect inner and outer gerotor assembly. Refer to Oil Pump Inspection in the Cleaning and Inspection portion of this section. Replace the oil pump assembly if any damage is found or if any measurements are not within specification.

Installation

1. Install inner gerotor on crankshaft.

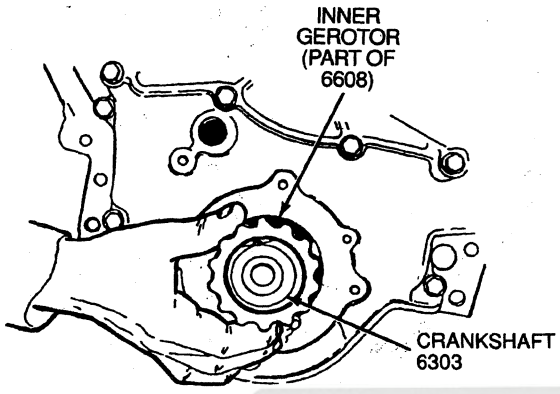

A22055-B

2. Install oil pump body plate (6616), outer gerotor and O-ring. Liberally apply oil to gerotor pump.

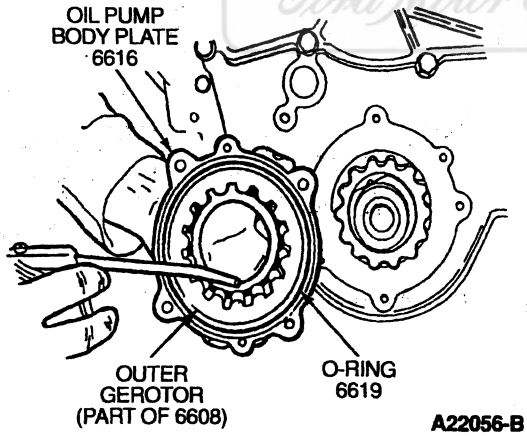

A22056-B

3. Install four oil pump body plate bolts. Tighten bolts to standard torque specification listed at the end of this section.
4. NOTE: A new crankshaft front seal (6700) should be installed whenever the crankshaft vibration damper is removed.

   NOTE: Apply RTV sealant to the crankshaft keyway prior to crankshaft vibration damper installation.

   Install crankshaft vibration damper using Driver / Puller Screw T79T-6316-A1 (part of T79T-6316-A), Driver Sleeve T79T-6316-A4 (part of T79T-6316-A), and Thread Adapter (part of T94T-6379-AH3).

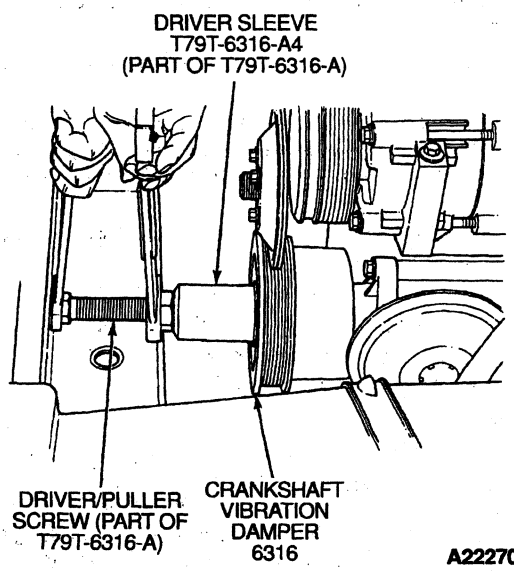

A22270-B

5. Install crankshaft pulley bolt and washer. Tighten crankshaft pulley bolt to 287 N·m (212 lb-ft).
6. Remove flywheel holding tool.
7. Install flywheel housing cover and screws. Tighten the screws to 17-23 N·m (13-17 lb-ft).
8. Lower vehicle.
9. Install radiator. Refer to Section 03-03.
10. Check and refill engine oil.

Piston and Connecting Rod

Removal

1. **CAUTION: Do not use a power wrench for removing or installing connecting rod bolts (6214), or connecting rod nuts (6212). Power wrench usage will cause seizure of connecting rod bolt or connecting rod nut threads.**

   Remove engine. Refer to Engine in the Removal and Installation portion of this section.
2. Remove cylinder heads (6049), oil pan (6675) and oil pump screen cover and tube (6622).
3. Remove any ridges or deposits from upper end of cylinder bores as follows:
   a. Turn crankshaft (6303) until piston to be removed is at bottom dead center (BDC). Place a cloth on piston head to collect cuttings. Remove any ridge or deposits from upper end of cylinder bores.
   b. Remove cylinder ridge with a razor knife or equivalent. Carefully scrape ridge away.
4. Mark all connecting rods (6200) and connecting rod caps to permit installation into original positions.

Official Licensed Product Ford Motor Company

REMOVAL AND INSTALLATION (Continued)

5. Remove connecting rod nuts and connecting rod cap.
6. Install rubber hose or equivalent onto connecting rod bolts.
7. **CAUTION: Avoid damage to piston cooling oil jets (6C327), crankshaft journal or cylinder wall when removing piston and connecting rod.**

   Push connecting rod and piston out top of cylinder with handle end of a hammer.
8. Remove connecting rod bearing (6211) from connecting rod and connecting rod cap.
9. Install connecting rod cap onto connecting rod from which it was removed.

Installation

1. Remove cylinder wall glaze if new piston rings are to be installed. Follow instructions of the tool manufacturer. Cylinder bores must be cleaned with a soap and water solution after deglazing or honing. Dry and oil cylinder walls immediately after cleaning. Use proper size ring installation tool.
2. **CAUTION: Be sure to install pistons in same cylinders from which they were removed, or to which they were fitted. If a connecting rod is ever transposed from one cylinder block or cylinder to another, new connecting rod bearings should be fitted and connecting rod should be numbered to correspond with a new cylinder number.**

   Oil piston rings, piston, and cylinder walls with specified engine oil.
3. Make sure ring gaps (oil control ring, compression rings) are properly spaced around circumference of piston. Refer to Piston Ring Spacing illustration.

Piston Ring Spacing

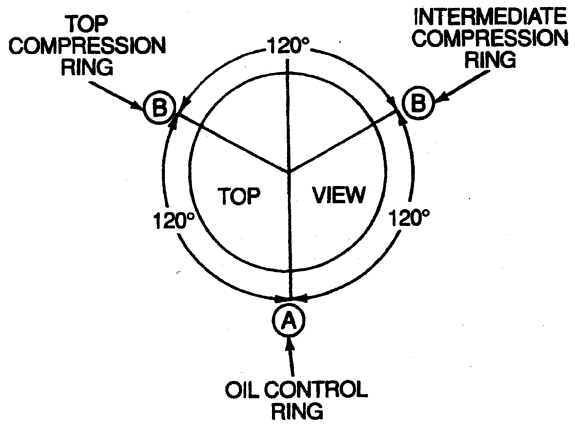

A23328-A

4. Make sure the indentation marks on top two compression rings are facing up. Piston rings are identified by indents as shown in Ring Identification illustration.

Ring Identification

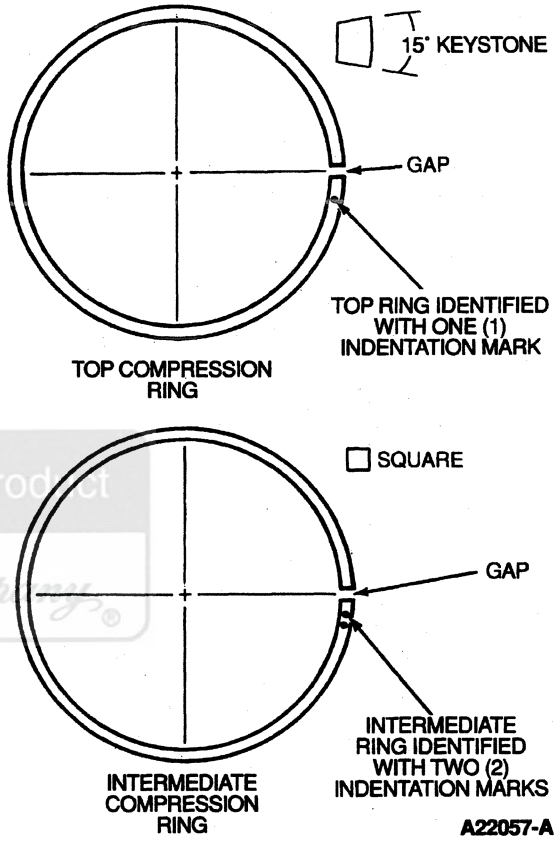

A22057-A

5. Turn crankshaft throw to position.

REMOVAL AND INSTALLATION (Continued)

6. Install upper connecting rod bearing. Install lengths of rubber hose onto connecting rod bolts. Before installing, make sure large chamfer on connecting rod faces crankshaft side, not opposite connecting rod (facing toward front of engine on right bank connecting rods, and toward rear of engine on left bank connecting rods). Install Piston Ring Compressor D81L-6002-C or equivalent onto piston and push piston in with a hammer handle until it is slightly below top of cylinder. Guide connecting rod to avoid damaging piston cooling oil jets and crankshaft journals. Install piston with arrow on piston head toward camshaft (6250).

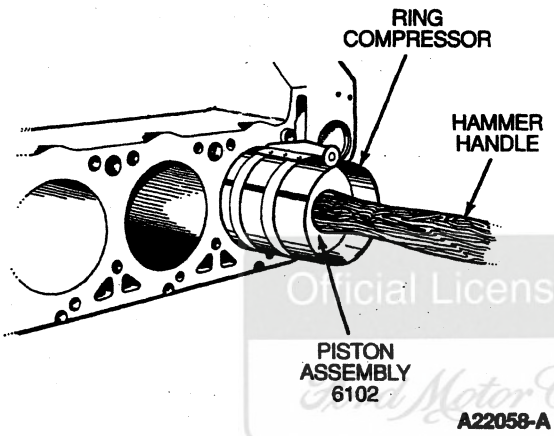

Piston Orientation

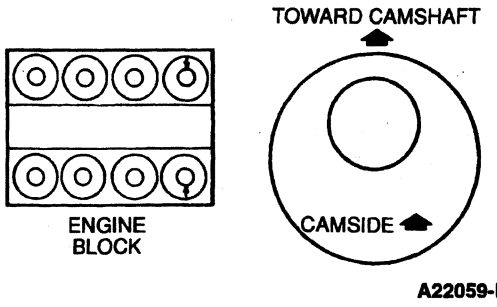

7. Push piston downward until connecting rod bearing seats on crankshaft journal. Remove protective sleeves (rubber hose) and install lower connecting rod bearing and connecting rod cap.
8. Check clearance of each connecting rod bearing and connecting rod side clearance following procedure described under Main Bearings and Connecting Rod Bearings in the Cleaning and Inspection portion of this section.
9. Apply a light coat of specified engine oil to crankshaft journals and connecting rod bearings.
10. NOTE: Lightly coat connecting rod bolt threads with oil before installing.

    Install connecting rod cap and lower connecting rod bearing. Initially tighten connecting rod nuts alternately to 71 N·m (52 lb-ft). Retighten connecting rod nuts alternately to 108 N·m (80 lb-ft).
11. Install cylinder heads, oil pump screen cover and tube, and oil pan.
12. Install engine. Refer to Engine in the Removal and Installation portion of this section.

Crankshaft

Removal

1. Remove engine. Refer to Engine in the Removal and Installation portion of this section.
2. Remove engine front and rear covers. Refer to Engine Front Cover and Engine Rear Cover in the Removal and Installation portion of this section.
3. Remove oil pump screen cover and tube (6622). Refer to Oil Pan, and Oil Pump Screen Cover and Tube in the Removal and Installation portion of this section.
4. Remove oil pump. Refer to Oil Pump in the Removal and Installation portion of this section.
5. Mark all bearing caps (main and connecting rod) to permit installation into their original locations.
6. **CAUTION: Use care to avoid damage to crankshaft journal, piston cooling oil jets (6C327) and cylinder wall when moving piston assembly.**

   Remove pistons. Refer to Piston and Connecting Rods in the Removal and Installation portion of this section.
7. NOTE: Main bearing caps are numbered from front of engine.

   Remove main bearing caps.
8. **CAUTION: Handle crankshaft (6303) with care to avoid possible fracture or damage to finished surfaces.**

   Install Engine Lifting Brackets T70P-6000 to crankshaft and lift crankshaft out of cylinder block so that bearing surfaces are not damaged.
9. Remove crankshaft main bearings (6333) and crankshaft thrust main bearings (6337) from main bearing caps and saddles.
10. Inspect crankshaft. Refer to Crankshaft in the Cleaning and Inspection portion of this section.

Installation

1. Using a lint-free cloth, wipe the bearing saddles clean and oil-free.
2. Clean the crankshaft main bearings and crankshaft thrust main bearings and main bearing caps thoroughly in solvent and dry with compressed air.

Official Licensed Product Ford Motor Company

REMOVAL AND INSTALLATION (Continued)

3. NOTE: Make sure the bearing tangs snap into the locating slots and the oil holes line up with the bearing holes.

   Install the bearing halves in the crankcase saddles and the main bearing caps.
4. Check bearing clearances. Refer to Main Bearings and Connecting Rod Bearings in the Cleaning and Inspection portion of this section.
5. Coat bearing halves with clean engine oil.
6. NOTE: When installing crankshaft make sure timing marks line up correctly. Refer to Camshaft in the Removal and Installation portion of this section.

   Carefully install the crankshaft.
7. NOTE: Number 1 main bearing cap is at the front of the engine.

   Install the main bearing caps, crankshaft main bearings and crankshaft thrust main bearings in correct locations.
8. Install main bearing cap bolts finger-tight. Using a soft-faced hammer, tap the numbers 2, 3 and 4 main bearing caps until the rear machined faces of the main bearing caps are flush with the machined faces of the cylinder blocks (6010).
9. Repeat the above step for the number 1 main bearing cap, aligning the front face of the main bearing cap with the cylinder blocks. Align the number 5 bearing rear thrust flanges with each other. Check this alignment at both sides of the main bearing caps.
10. Tighten main bearing cap bolts to 102 N·m (75 lb-ft) for main bearing caps 1, 2, 3 and 4.
11. Check crankshaft end play as follows:
    a. Install Dial Indicator Bracketry D78P-4201-F and Dial Indicator D78P-4201-G or equivalents on the machined surface of the cylinder blocks.
    b. Position dial indicator tip on the nose of the crankshaft and zero in the dial indicator.
    c. Using a prybar, move the crankshaft back and forth. Record the reading.
    d. End play should be within 0.063-0.216 mm (0.0025-0.0085 inch).
    e. If end play exceeds service limits, the crankshaft thrust main bearing should be replaced and end play reverified.

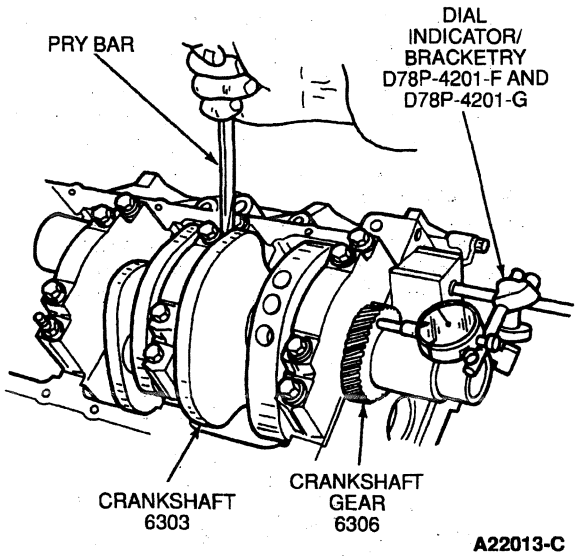

A22013-C

12. Tighten all main bearing cap bolts to 129 N·m (95 lb-ft).
13. Install piston and rod assemblies. Refer to Piston and Connecting Rod in the Removal and Installation portion of this section.
14. Check connecting rod side clearance. Refer to Main Bearings and Connecting Rod Bearings in the Cleaning and Inspection portion of this section.
15. Install oil pump. Refer to Oil Pump in the Removal and Installation portion of this section.
16. Install oil pump screen cover and tube, and oil pan (6675). Refer to Oil Pan and Oil Pump Screen Cover and Tube in the Removal and Installation portion of this section.
17. Install engine front and rear cover. Refer to Engine Front Cover and Engine Rear Cover in the Removal and Installation portion of this section.
18. Install engine in vehicle. Refer to Engine in the Removal and Installation portion of this section.

Oil Filter

Removal

1. Raise vehicle.
2. Remove the oil filter (6731), using a suitable oil filter wrench.

Installation

1. Clean the gasket mating surface on the oil filter flange.
2. Lightly coat the gasket sealing surface with clean engine oil.
3. Install the oil filter until the seal contacts the filter flange and then tighten 1-1/4 to 2 additional turns.

REMOVAL AND INSTALLATION (Continued)

4. Lower vehicle.
5. Check engine oil level, and add as required.
6. Run engine and check for oil leaks.

Engine Oil Cooler

Removal

1. Drain the engine coolant. Refer to Section 03-03.
2. Remove the marmon clamp from the turbocharger exhaust outlet pipe.
3. Raise vehicle.
4. Remove the oil filter (6731).
5. Remove the engine block heater electrical connector.
6. Remove the two left engine mount to bracket bolts.
7. Remove the oil cooler front header retaining bolts.
8. Remove the oil cooler rear header retaining bolts.
9. Reposition the engine assembly using a suitable jack.
10. Remove the oil cooler (6A642) and gaskets from vehicle.

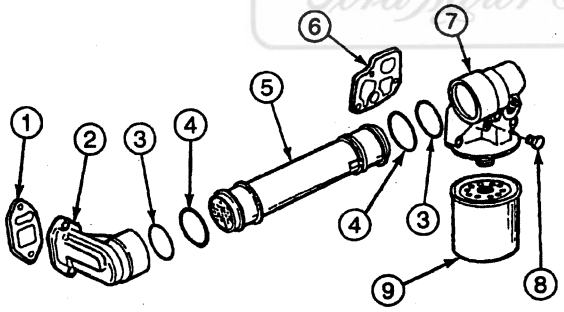

A22077-B

Item	Part Number	Description
1	6A636	Gasket, Oil Cooler Front Header
2	6881	Header, Oil Cooler Front
3	6K649	O-Ring, Oil Cooler Inner

(Continued)

Item	Part Number	Description
4	6C610	O-Ring, Oil Cooler Outer
5	6A642	Oil Cooler
6	6A636	Gasket, Oil Cooler Rear Header
7	6881	Header, Oil Cooler Rear
8	—	Plug (Part of 6881)
9	6731	Oil Filter

Installation

1. Install the engine oil cooler, rear gasket and three rear bolts to snug.
2. Install the oil cooler front header gasket and two retaining bolts. Tighten bolts to 32 N·m (24 lb-ft).
3. Lower the engine in its original position.
4. Install two engine mount to bracket bolts, tighten bolts to standard torque specification listed at the end of this section.
5. Tighten the three oil cooler rear header retaining bolts to 19 N·m (14 lb-ft).
6. Install the oil filter.
7. Connect the engine block heater electrical connector.
8. Lower vehicle.
9. Refill the engine cooling system. Refer to Section 03-03.
10. Refill the engine oil.

DISASSEMBLY AND ASSEMBLY

Cylinder Head

SPECIAL SERVICE TOOL(S) REQUIRED

Description	Tool Number
Valve Spring Compressor Tool	T94T-6513-AH
Slide Hammer	T50T-100-A

Disassembly

1. Remove cylinder head (6049). Refer to Cylinder Heads Left or Right in the Removal and Installation portion of this section.

Official Licensed Product
Ford Motor Company

DISASSEMBLY AND ASSEMBLY (Continued)

2. Install Valve Spring Compressor Tool T94T-6513-AH.

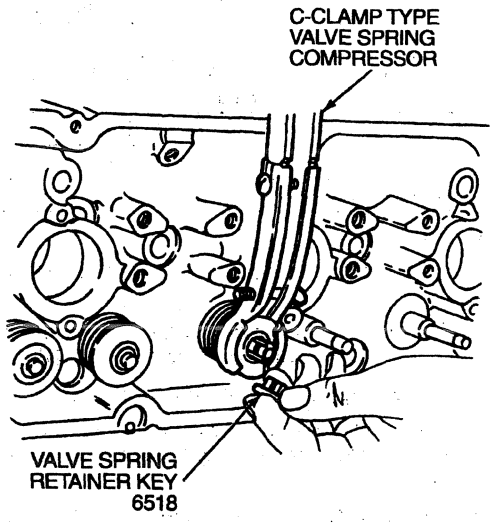

A23369-A

3. NOTE: It may be necessary to strike the valve stem end with a plastic-tipped hammer to loosen the valve spring retainer keys (6518).

   Remove the valve spring retainer keys, rotators and the valve springs (6513).

4. Remove the valves.

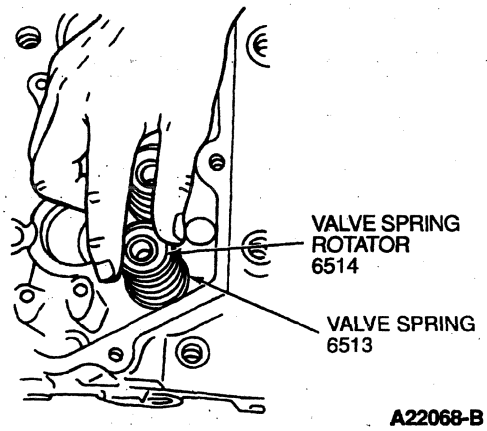

A22068-B

5. Remove the valve stem seals (6571).

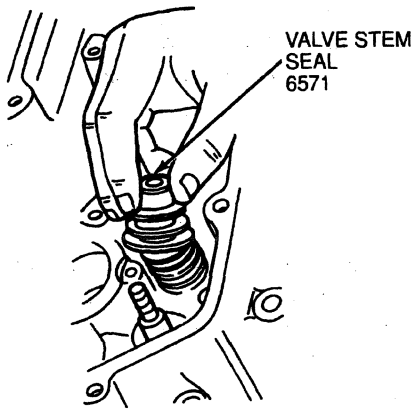

A22069-A

6. Remove the intake manifold cover retaining bolts.
7. NOTE: Carefully remove the intake manifold cover using a gasket scraper or equivalent between the intake manifold cover and the cylinder head to break the RTV sealant. Be careful not to bend intake manifold cover.

   Remove the intake manifold cover.

8. Remove the injection control pressure sensor and discard O-ring (left cylinder head only).

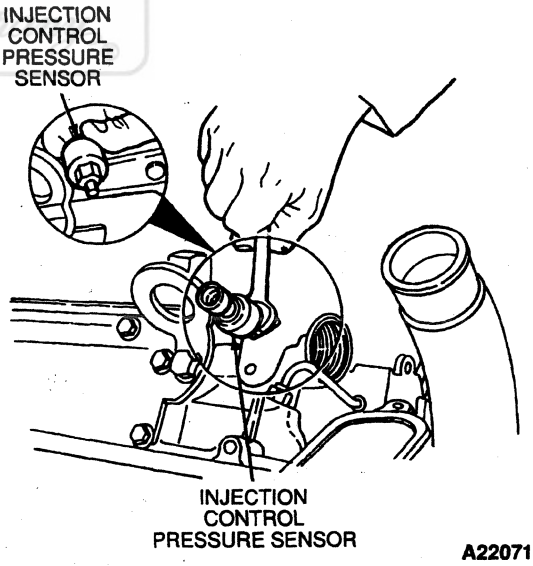

A22071-A

9. Remove fuel injector sleeves if cylinder head is to be cleaned with solvents. Refer to Section 03-04C.

Ford Motor Company Official Licensed Product

DISASSEMBLY AND ASSEMBLY (Continued)

10. The intake valves (6507) can be identified by the dimple in the center of the intake valve head.

    Inspect valve for evidence of burning, warping, scuffing or bending. Minor pits, grooves, etc., may be removed. Discard valves that are severely damaged, if face runout cannot be corrected by refinishing, or if stem clearance exceeds specifications. Refer to Specifications at the end of this section.

    Discard any worn or damaged valve train components.

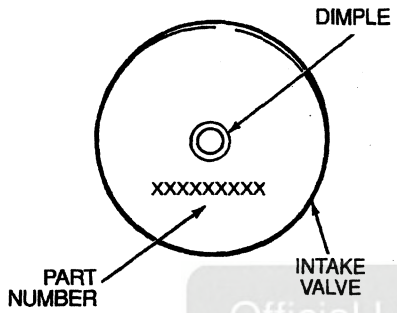

A20417-B

Assembly

1. Install the valve stem seals.
2. Install the valve springs and rotators.
3. Install Valve Spring Compressor Tool T94T-6513-AH.
4. Compress the valve springs and install the valve spring retainer keys.
5. Remove the valve spring compressor tool.
6. Use Rotunda Injector Sleeve Brush 014-00934 or equivalent to clean the injector bores of any sealant residue and also to make sure the fuel injector O-rings seat properly. Remove any debris from the fuel injector bores.
7. If removed, install fuel injector sleeves. Refer to Section 03-04C.
8. Apply Silicone Rubber F4AZ-19562-B or equivalent meeting Ford specifications ESE-M4G195-A or WSE-M4G323-A1 to the intake manifold cover mating surfaces.
9. Install the intake manifold cover.
10. Install the intake manifold cover retaining bolts. Tighten bolts to 24 N·m (18 lb-ft).
11. Remove the cylinder head from the holding fixture.
12. NOTE: Apply Threadlock® and Sealer EOAZ-19554-AA or equivalent meeting Ford specification WSK-M2G315-A5 to threads of injection control pressure sensor prior to installation.

    Install the injection control pressure sensor with a new O-ring. Tighten injection control pressure sensor to 29 N·m (21 lb-ft).

Cylinder Block

Before replacing a cylinder block, determine if it is serviceable. If so, service as necessary.

Disassembly

1. Mount engine in a work stand using Rotunda Engine Mounting Bracket 014-00939 or equivalent. Remove necessary engine components required to install engine on stand.

ENGINE MOUNTING BRACKET
014-00939

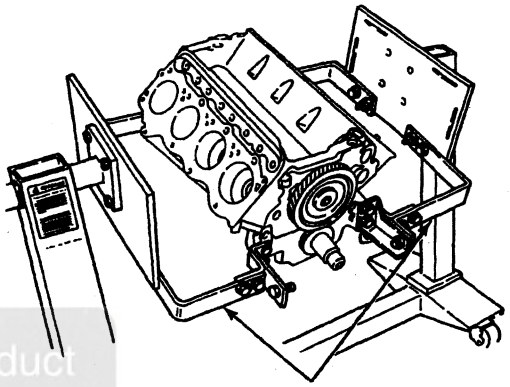

ENGINE MOUNTING BRACKET
014-00939

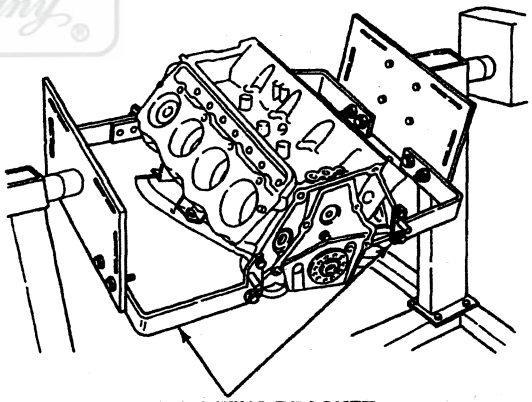

ENGINE MOUNTING BRACKET
014-00939

DA0967-A

2. Remove the cylinder heads (6049), oil pan (6675), engine front cover (6019) and engine rear cover.
3. Remove cylinder bore ridge before removing piston assemblies. Using a sharp razor blade, carefully scrape off cylinder bore ridge.
4. Remove piston and rod assemblies and crankshaft (6303).
5. Remove cylinder head locating dowels and cylinder block oil gallery and core plugs.
6. Clean and inspect cylinder blocks (6010). Refer to Cylinder Block in the Cleaning and Inspection portion of this section.

Official Licensed Product
Ford Motor Company

DISASSEMBLY AND ASSEMBLY (Continued)

Assembly

1. Install crankshaft, and piston and rod assemblies.
2. Install oil gallery and core plugs. Refer to Core Plugs in the Cleaning and Inspection portion of this section.
3. Install oil pan, engine front cover, engine rear cover and cylinder heads.

Oil Gallery Plugs

Refer to Cylinder Block in the Cleaning and Inspection portion of this section.

Piston and Connecting Rod

Disassembly

1. NOTE: When replacing piston and connecting rod (6200), make sure to use the correct replacement part.

   Remove connecting rod bearings (6211) from connecting rod and connecting rod cap.
2. Mark pistons to make sure they are installed with the same connecting rod and installed into cylinders from which they were removed.
3. Mark connecting rod to make sure of correct orientation to piston on reassembly.
4. To disassemble connecting rod from piston and piston pin assembly, remove piston pin retainers (6140) from each end of piston pin (6135) using appropriate snap ring pliers.
5. Push piston pin out of connecting rod and piston by hand.

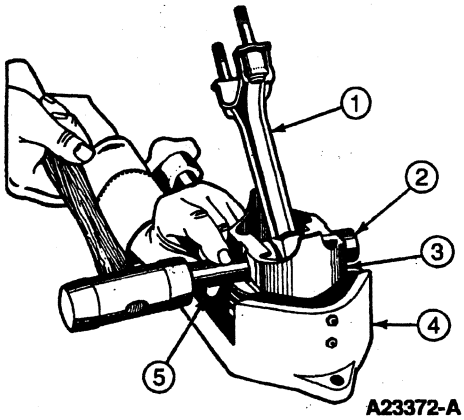

A23372-A

Item	Part Number	Description
1	6200	Connecting Rod
2	6135	Piston Pin

(Continued)

Item	Part Number	Description
3	6102	Piston
4	—	Piston Vise
5	—	Nylon Rod / Brass Drift

6. After piston pin is removed, separate piston from connecting rod. Remove all old piston rings from piston. Clean and inspect components. Refer to Pistons, Piston Pins and Piston Rings, and Connecting Rods in the Cleaning and Inspection portion of this section.

Assembly

1. Assemble piston to connecting rod. Position connecting rod into piston so that large chamfer of connecting rod journal faces the crankshaft fillet. The word camside and an arrow on the piston should point toward the camshaft (6250) when installed in cylinder blocks (6010).

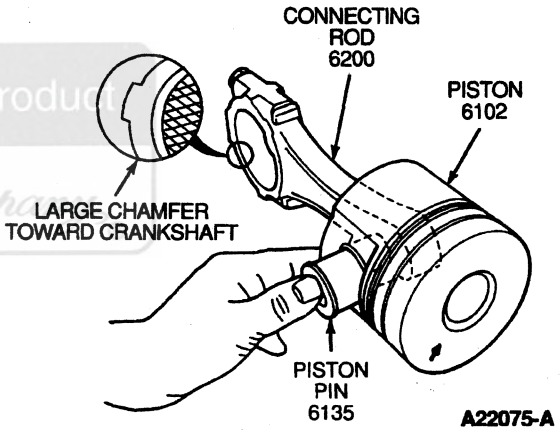

A22075-A

2. Lubricate piston pin with specified engine oil. Align rod bore and piston bore and insert piston pin. Push piston pin with thumb and install piston pin retainers. Make sure piston pin retainers seat fully in their grooves.
3. After checking piston ring end gap, assemble piston rings onto pistons to which they were fitted by using a suitable ring expander tool. This type of tool is recommended to avoid overexpansion of piston rings, and also to expand piston rings to a true circle to avoid distortion. Install piston rings onto piston in the following order: oil control ring, second compression ring and top compression ring. Space ring gaps 120 degrees apart.

Official Licensed Product Ford Motor Company

DISASSEMBLY AND ASSEMBLY (Continued)

4. Check ring side clearance (second compression ring).

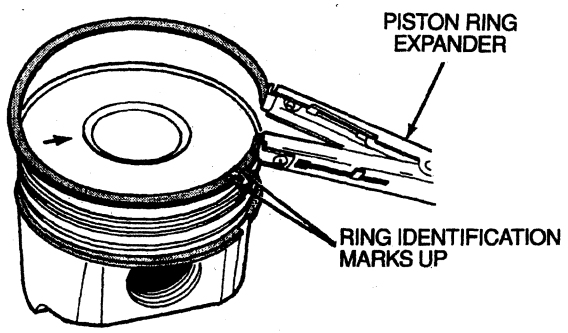

A22076-A

Engine Oil Cooler

If oil is found in the cooling system, or coolant found in the oil, the oil cooler (6A642) should be checked for leakage as outlined under Oil Cooler Internal Leakage Test in the Service Procedures portion of this section.

If oil cooler O-rings are leaking, remove oil cooler. Refer to Engine Oil Cooler in the Removal and Installation portion of this section. Disassemble and service as follows.

Disassembly

1. Gently rap front header and rear (oil filter) header to loosen O-rings. Twist oil cooler apart.
2. Clean oil cooler, front header and rear header thoroughly in suitable solvent. The oil cooler should be thoroughly flushed and drained to remove all residue within it.

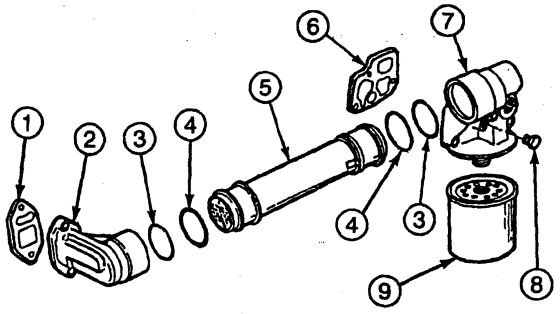

A22077-B

Item	Part Number	Description
1	6A636	Gasket, Oil Cooler Front Header
2	6881	Header, Oil Cooler Front
3	6K649	O-Ring, Oil Cooler Inner

(Continued)

Item	Part Number	Description
4	6C610	O-Ring, Oil Cooler Outer
5	6A642	Oil Cooler
6	6A636	Gasket, Oil Cooler Rear Header
7	6881	Header, Oil Cooler Rear
8	—	Plug (Part of 6881)
9	6731	Oil Filter

Assembly

1. Use new O-rings when assembling oil cooler. Lubricate all O-ring mating surfaces and O-rings prior to assembly with clean engine oil.
2. Install the large O-rings on the oil cooler first, then install the small O-rings on the oil cooler.

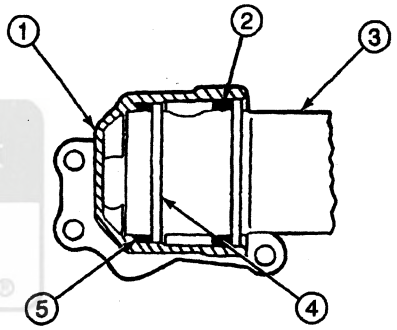

A23347-A

Item	Part Number	Description
1	6881	Header, Oil Cooler Front
2	6C610	O-Ring, Oil Cooler Outer
3	6A642	Oil Cooler
4	—	Flange (Part of 6A642)
5	6K649	O-Ring, Oil Cooler Inner

3. Press assembly together, making sure locating clips align in slots and header is not cocked.
4. Test oil cooler before installing on engine.

SERVICE PROCEDURES

Oil Cooler Internal Leakage Test

Inspection

1. Remove oil cooler (6A642) from engine. Refer to Engine Oil Cooler, Removal in the Removal and Installation portion of this section.
2. Using new header gaskets, attach oil cooler assembly to Rotunda Oil Cooler Internal Leakage Tester 014-00726 or equivalent.

Official Licensed Product Ford Motor Company

SERVICE PROCEDURES (Continued)

3. Pressurize coolant side of front header test plate at air supply fitting with 277 kPa (40 psi) air pressure.
4. Inspect for air leakage at the plastic tubes and at each header cover plate. If no leakage is detected, place a cup of water up to the plastic tubes.
   - If no bubbles appear, no internal leak in the oil cooler assembly is indicated.
   - If bubbles appear, an internal leak is present in oil cooler assembly.
5. Disengage air source and remove oil cooler assembly from Rotunda Oil Cooler Internal Leakage Tester 014-00726 or equivalent.
6. If leakage was detected, disassemble oil cooler assembly. Refer to Engine Oil Cooler, Disassembly in the Disassembly and Assembly portion of this section. Replace oil cooler bundle tube.
7. Install oil cooler on engine. Refer to Engine Oil Cooler, Installation in the Removal and Installation portion of this section.
8. If engine oil leaked into the coolant, drain and flush cooling system. Refer to Section 03-03. If coolant leaked into the engine oil, change the oil and oil filter (6731).

Drive Gear Backlash (All Gears)

With the engine front cover removed, perform the following steps:

1. Install Dial Indicator Bracketry D78P-4201-F and Dial Indicator D78P-4201-G or equivalents on the machined surface of the cylinder block.
2. NOTE: Keep other gears from moving while performing this procedure.

   Position the dial indicator tip on the sprocket tooth of the gear to be checked.
3. Rotate gear to remove backlash and zero in the dial indicator.
4. Rotate gear in opposite direction and measure the backlash.
5. Backlash should be within 0.038-0.305 mm (0.0015-0.012 inch).
6. If backlash exceeds service limits, the gear should be replaced.

Checking Timing Gear Backlash

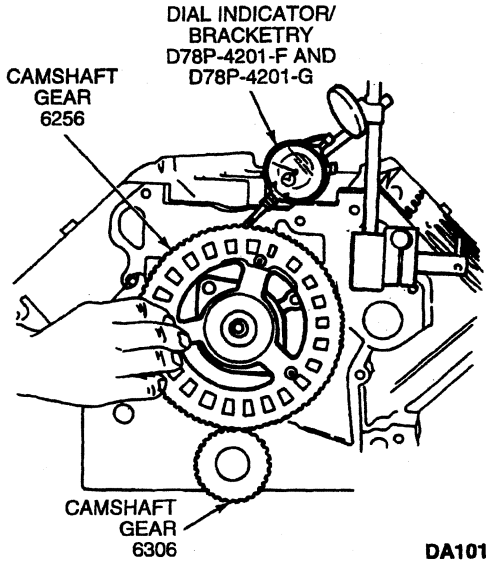

DA1011-A

CLEANING AND INSPECTION

Service Limit Specifications

Refer to Specifications at the end of this section for service limits.

Cylinder Block

1. Remove main oil gallery plug and use a 9.5-mm (3/8-inch) diameter brush to clean main oil gallery. Replace oil plug after coating with Perfect Seal Sealing Compound F2AZ-19554-AA or equivalent nonhardening sealing compound meeting Ford specifications ESR-M18P2-A and ESE-M4G115-A.

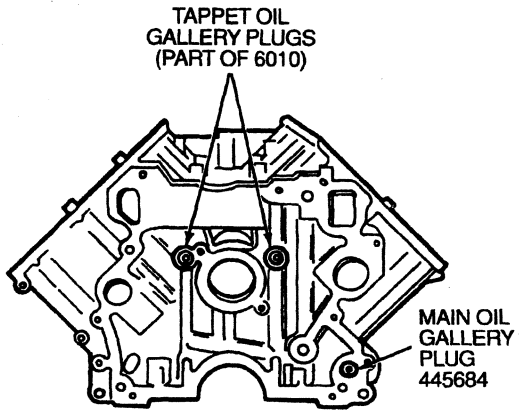

A23073-B

CLEANING AND INSPECTION (Continued)

2. Remove tappet oil gallery plugs and clean tappet oil galleries with an 8-mm (5/16-inch) brush. Replace tappet gallery plugs after coating with Perfect Seal Sealing Compound F2AZ-19554-AA or equivalent nonhardening Sealing Compound meeting Ford specification ESR-M18P2-A and ESE-M4G115-A.
3. Make sure threads in cylinder head bolt holes are clean. Dirt in threads may cause binding and result in false torque readings. Use tap to true-up threads and to remove any deposits.

Cylinder Walls, Refinishing

1. NOTE: It is NOT necessary to remove crankshaft (6303). However, it is good practice to oil the connecting rod journals and wrap them in a shop towel with tape.

   NOTE: Obtain an electric or air-powered drill motor with adjustable speed. A speed of about 100 rpm is required. If this is not available, service will not be successful.

   Remove the piston cooling oil jet (6C327) prior to honing the cylinder, otherwise damage to piston cooling oil jet will result.

   To refinish cylinder walls, obtain a "flexhone" for a 4-inch bore engine with a 120 grit rating (no color code). This type of hone looks like a wire brush with carbide balls on the ends of the bristles. Obtain a full 12-ounce container of Rust Penetrant and Inhibitor F2AZ-19A501-A or equivalent meeting Ford specification ESR-M99C56-A. This spray contains colloidal graphite and has a black appearance.
2. Spray cylinder wall with graphite spray and hone cylinder wall for about three seconds while stroking up and down twice a second. Remove the hone (ALWAYS REMOVE WITH HONE ROTATING), and wipe a portion of cylinder wall. Inspect the crosshatch pattern comparing it to the neighboring (untouched) cylinder. The crosshatch angle should be 120 to 135 degrees.
3. Comparison with a "virgin" bore is the best check, provided the engine has not been repaired before. If the pattern is flatter than called for, increase stroke speed or slow down rotation speed. Honing to the very bottom of the cylinder is not required as the piston ring travel stops well short of the bottom of the bore. The hone must be partly removed from the cylinder at the top of each stroke.
4. Continue honing the cylinder (after adjusting your technique to get required 120 to 135 degrees crosshatch) for 10 to 15 seconds, while an assistant continuously sprays the graphite spray at the cylinder wall. Do not spend more than 15 seconds (25 strokes) per bore. Wipe cylinder bore clean and inspect. The bore should have a satin-like sheen with a clearly identified crosshatch pattern of 120 to 135 degrees. Compare with a virgin bore to confirm correct angle. Repeat for remaining cylinders.
5. Wash all cylinders with mild soap and water (dishwashing solution). Dry with compressed air and immediately oil cylinder walls to prevent corrosion.

Cleaning

CAUTION: If these procedures are not followed, rusting of the cylinder bore(s) may occur.

After any cylinder bore service operation such as honing or deglazing, clean the bore(s) with soap or detergent and water. Then, thoroughly rinse the bore(s) with clean water to remove the soap or detergent and wipe the bore(s) dry with a clean lint-free cloth. Finally, wipe the bore(s) with a clean cloth dipped in engine oil.

If the engine is disassembled, thoroughly clean the block with solvent. Remove old gasket material from all machined surfaces. Remove all pipe plugs that seal oil passages and clean out all the passages. Blow out all passages, then bolt holes, etc., with compressed air. Make sure threads in the cylinder head bolt holes are clean. Dirt in the threads may cause binding and result in a false torque reading. Use a tap to true-up threads and to remove all deposits.

Inspection

After the block has been thoroughly cleaned, check it for cracks. Tiny cracks not visible to the naked eye may be detected by coating the suspected area with a mixture of 25 percent kerosene and 75 percent light engine oil. Wipe the part dry and immediately apply a coating of zinc oxide dissolved in wood alcohol. Do not use rubbing alcohol as a substitute. If cracks are present, the coating will become discolored at the damaged area. Replace the cylinder blocks (6010) if it is cracked.

Check all machined surfaces for burrs, nicks, scratches and scores. Remove minor imperfections with an oilstone.

Check the cylinder block for flatness of the cylinder head gasket surface following the procedure and specifications recommended for the cylinder head (6049). The cylinder block can be machined to bring the cylinder head gasket surface within the flatness specifications listed at the back of this section, but not to exceed 0.254 mm (0.010 inch) stock removal from the original gasket surface.

Replace all plugs that show evidence of leakage. Inspect the cylinder walls for scoring, roughness or other signs of wear. Check the cylinder bore for out-of-round and taper. Measure the bore with an accurate bore gauge following the instructions of the manufacturer. Measure the diameter of each cylinder bore at the top, middle and bottom with the gauge placed at right angles and parallel to the centerline of the engine to determine if cylinder is out of round. Use only the measurements obtained at 90 degrees to the engine centerline when calculating the piston-to-cylinder bore clearance.

CLEANING AND INSPECTION (Continued)

Inspect the main and connecting rod journals for cracks, scratches, grooves, scores or rough finish. Inspect the crankshaft oil seal surface for nicks, sharp edges or burrs that might damage the crankshaft front seal (6700) or crankshaft rear oil seal (6701) during installation or cause premature seal wear.

CHECK FOR OUT-OF-ROUND AT EACH END OF JOURNAL

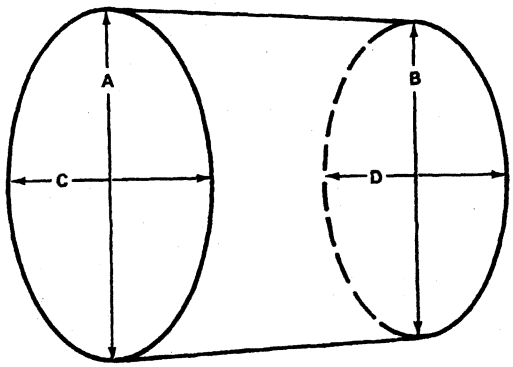

A VS B = VERTICAL TAPER
C VS D = HORIZONTAL TAPER
A VS C AND B VS D = OUT OF ROUND

A10094-1A

Core Plugs — Cup Type

Removal

1. Drill a 13-mm (1/2-inch) hole in the center of cup plug to be replaced.
2. Remove cup plug using a small pry bar.

Installation

1. Coat the cup plug or bore lightly with Stud and Bearing Mount EOAZ-19554-BA or equivalent meeting Ford specification WSK-M2G349-A1.
2. Install the new cup plug with the concave side away from the engine.
3. Install cup plug using Expansion Plug Replacer D83T-6015-B or equivalent.

Main Bearings and Connecting Rod Bearings

Cleaning

Bearings that are to be reused should be identified so they can be installed in their original locations.

Clean the bearing inserts and caps thoroughly in solvent, and dry them with compressed air. Do not scrape gum or varnish deposits from the bearing shells.

Inspection

CAUTION: In the event of bearing failure, the oil cooler (6A642) and turbocharger must be disassembled and the tube bundle must be replaced.

Inspect each bearing carefully. Bearings that have a scored, chipped or worn surface should be replaced. Typical examples of unsatisfactory bearings and their causes are shown in the illustration. The copper lead bearing base may be visible through the bearing overlay. If the base showing is less than 20 percent of the total area, the bearing is not excessively worn. It is not necessary to replace the bearing if the bearing clearance is within recommended limits. Check the clearance of bearings that appear to be satisfactory with Plastigage® D81L-6002-B or equivalent. Refer to Fitting Main Bearings or Connecting Rod Bearings with Plastigage® in the Cleaning and Inspection portion of this section.

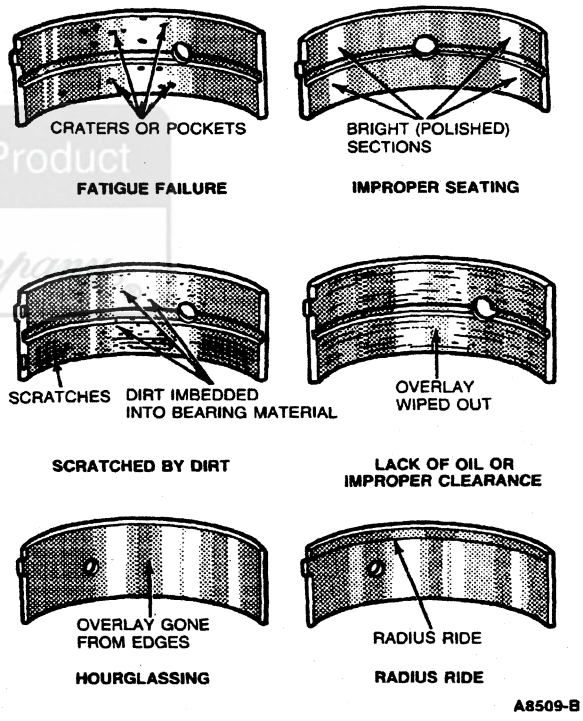

A8509-B

Fitting Main Bearings or Connecting Rod Bearings with Plastigage®

Main Bearings

1. NOTE: Be sure bearing inserts, bearing bore and mating surfaces are clean. Foreign material under inserts will distort crankshaft main bearing (6333) or crankshaft thrust main bearing (6337) and cause incorrect readings and subsequent bearing failure.

   Install crankshaft main bearings or crankshaft thrust main bearing.

Official Licensed Product
Ford Motor Company

CLEANING AND INSPECTION (Continued)

2. NOTE: Lightly coat bolt threads with oil before installing.

   To obtain an accurate reading using Plastigage® D81L-6002-B or equivalent method of checking, all bearing caps must be in place and tightened to 102 N·m (75 lb-ft). Retighten bolts to 129 N·m (95 lb-ft).

   Remove one bearing cap and bearing insert. Leave remaining bearing caps tight while checking fit of crankshaft main bearing or crankshaft thrust main bearing.
3. Wipe oil from all contact surfaces such as crankshaft journal, bearing insert, bearing caps, etc.
4. NOTE: Do not turn crankshaft (6303) while making check with Plastigage®.

   Place piece of Plastigage® D81L-6002-B or equivalent across full width of bearing surface on crankshaft journal (or bearing cap insert) approximately 6.35 mm (0.250 inch) off center. Install bearing cap and tighten cap bolt to specification.
5. Remove bearing cap and bearing insert.
6. Do not disturb Plastigage®. Using Plastigage® envelope, measure widest point of Plastigage®. Reading indicates bearing clearance in thousandths of an inch.

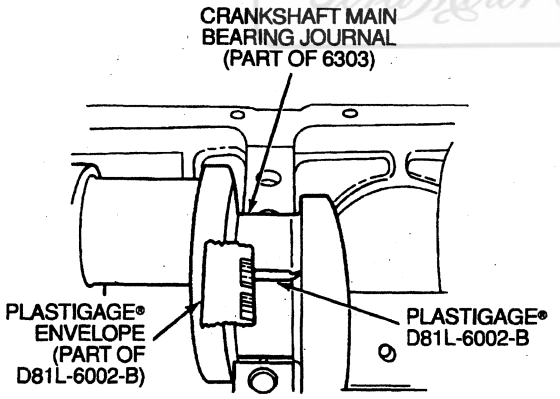

A23071-B

7. Crankshaft must be reground and undersize crankshaft main bearing and crankshaft thrust main bearing installed if the bearing clearance is not within specifications.

Connecting Rod Bearings

1. NOTE: Make sure bearing inserts, bearing bore and mating surfaces on connecting rod and connecting rod cap are clean. Foreign material under bearing inserts will distort connecting rod bearing (6211) and cause incorrect readings and subsequent bearing failure.

   Remove bearing cap and wipe oil from face of bearing insert and exposed portion of crankshaft journal.
2. NOTE: Do not turn crankshaft while Plastigage® is in place.

   Place a piece of Plastigage® D81L-6002-B or equivalent on bearing surface across full width of connecting rod bearing about 6.35 mm (0.250 inch) off center.
3. NOTE: Lightly coat bolt threads with oil before installing.

   Install connecting rod cap and tighten connecting rod nuts (6212) to 95 N·m (70 lb-ft).
4. Remove bearing cap and use Plastigage® scale to measure widest point of Plastigage®. Reading indicates bearing clearance in thousandths of an inch. The opposite side of the scale indicates bearing clearance in tenths of millimeters.

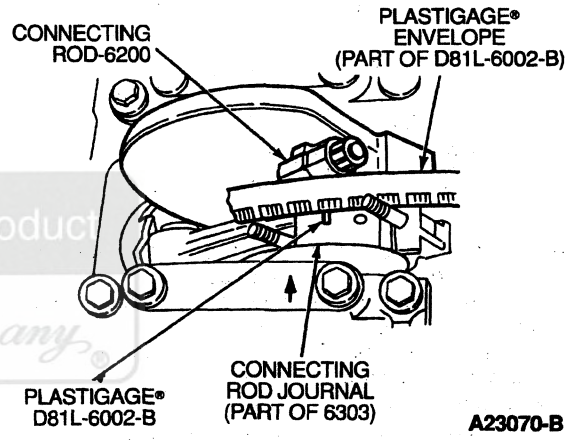

A23070-B

5. Crankshaft must be reground and undersize connecting rod bearings installed if bearing clearance is not within specifications.

Crankshaft

Cleaning

CAUTION: Handle crankshaft (6303) with care to avoid possible fractures or damage to finish surfaces.

CAUTION: Do not use crocus cloth to the extent that seal surfaces become polished. A finely polished surface may produce poor sealing.

Clean crankshaft with solvent, and blow out all oil passages with compressed air.

Clean oil seal contact surface at rear of crankshaft with solvent to remove any corrosion, sludge or varnish deposits. Excess deposits not readily removable with solvent may be removed with crocus cloth. Use crocus cloth to remove any sharp edges, burrs or other imperfections which might damage crankshaft rear oil seal (6701) during installation or cause premature seal wear.

Ford Motor Company Proprietary Product

CLEANING AND INSPECTION (Continued)

Inspection

Inspect main and connecting rod journals for cracks, scratches, grooves or scores.

Measure diameter of each journal in at least four places to determine out-of-round, taper or undersize condition.

CHECK FOR OUT-OF-ROUND AT EACH END OF JOURNAL

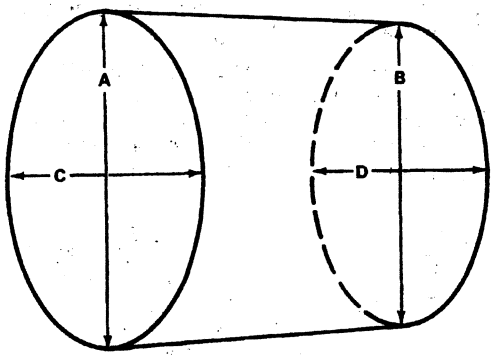

A VS B = VERTICAL TAPER
C VS D = HORIZONTAL TAPER
A VS C AND B VS D = OUT OF ROUND

A10094-1A

Bearing failures can cause overheating of crankshaft journals and a reduction of hardness. When this occurs, the crankshaft strength may be unacceptably reduced. Whenever bluing is found on the journal or fillet area, the crankshaft must be reground by a qualified machine shop to make sure correct heat treatment is given during grinding.

Crankshafts must not be straightened. Even slight straightening with complete absence of cracks will endanger the high strength built into the crankshaft.

Journals, Refinishing

An induction-hardened fillet and journal crankshaft can be reground for undersized bearings.

Crankshafts should be ground at a qualified machine shop experienced in grinding induction hardened crankshafts. Crankshafts should be magnifluxed after grinding to make sure that there are no surface cracks.

Grinding Limits

Maximum allowable taper on main journals is 0.0038 mm (0.00015 inch). Connecting rod journals must not be over 0.005 mm (0.0002 inch) out of round.

The No. 1, 2, 3 and 4 main journal fillet radii should be 3.30 mm (0.130 inch) with the crankpins (rod journals) fillet radii held at 3.68 mm (0.145 inch). The No. 5 main bearing journal fillet radius should be 3.99-4.14 mm (0.157-0.163 inch).

The fifth main journal controls crankshaft end thrust and provides initial location of crankshaft in relation to cylinder block. For this reason the width of the fifth journal must be 31.509-31.585 mm (1.2405-1.2435 inch).

Crankshaft Damper

Cleaning

CAUTION: Do not immerse crankshaft vibration damper (6316) in petroleum-based solvent. Damage will result to rubber dampening element.

Clean crankshaft vibration damper using a suitable solvent and dry with filtered compressed air.

Inspection

Inspect crankshaft vibration damper wear sleeve surface for nicks, sharp edges or burrs that might damage crankshaft front seal (6700) during installation.

Inspect crankshaft vibration damper members for alignment. Using a protractor, measure the angle between the timing mark and the center of key way. If angle is other than 75 degrees, replace crankshaft vibration damper.

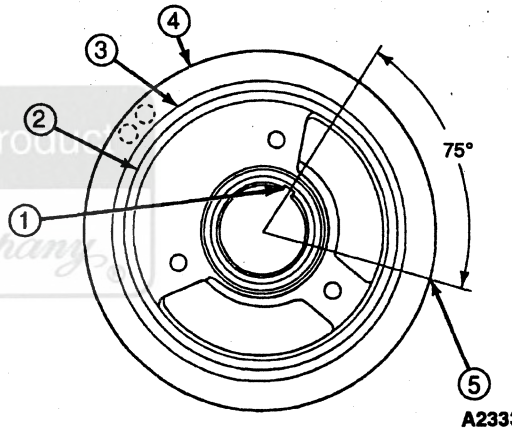

A23331-B

Item	Part Number	Description
1	—	Keyway (Part of 6316)
2	—	Inner Member (Part of 6316)
3	—	Rubber Member (Part of 6316)
4	—	Outer Member (Part of 6316)
5	—	Timing Mark (Part of 6316)

Drive Gears

Cleaning

Clean gears in solvent and dry with compressed air.

Inspection

Inspect gear teeth for concerns such as scores and nicks. Note condition of tooth contact pattern. If teeth are scored, replace gears.

Check drive gear backlash. Refer to Drive Gear Backlash (All Gears) in the Service Procedures portion of this section.

Official Licensed Product

CLEANING AND INSPECTION (Continued)

It is not necessary to replace gears in sets. Replace damaged gears and check backlash, runout, etc., to determine if any other gear should be replaced.

Pistons, Piston Pins and Piston Rings

Cleaning

CAUTION: Do not use a caustic cleaning solution or a wire brush to clean pistons.

CAUTION: Extreme care must be used when cleaning grooves on aluminum pistons.

Remove deposits from the piston surfaces. Clean gum or varnish from the piston skirt, piston pins (6135) and piston rings with solvent.

Clean the ring grooves by breaking the old compression ring and using the good edge to clean out any varnish or deposits. Use the top compression ring to clean the top ring groove and the second compression ring to clean the second ring groove because they are different ring designs.

Inspection

SPECIAL SERVICE TOOL(S) REQUIRED

Description	Tool Number
Keystone Piston Ring Gauge Set	T94T-6002-AH

Carefully inspect the piston for fractures at the ring lands, skirts, oil ring slot corners and pin bosses, and for scuffed, rough or scored skirts. If the lower inner portion of the ring grooves has a high step, replace the piston.

Check keystone piston ring groove wear using Keystone Piston Ring Gauge Set T94T-6002-AH. Install the gauge pins in the appropriate groove and measure diameter with an outside micrometer. The acceptable range for the top compression ring groove is 4.097-4.130 inches. If specification is not in the acceptable range, replace the piston.

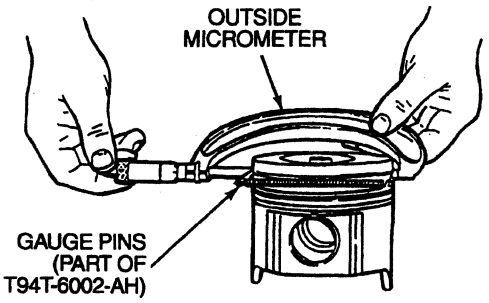

A23349-A

Check intermediate and oil control ring side clearance using a feeler gauge in between the ring and the ring land. Refer to Specifications for proper clearances.

A shiny surface on the thrust surface of the piston, offset from the centerline between the piston pin holes, can be caused by a bent connecting rod (6200). Replace pistons that show signs of excessive wear, wavy ring lands, fractures or damage.

Check the piston-to-cylinder bore clearance by measuring the piston and bore diameters. Refer to Specifications for the proper clearance. Refer to Cylinder Block in the Cleaning and Inspection portion of this section for the bore measurements procedure. Measure the outside diameter of the piston and check piston-to-bore clearance.

Replace piston pins showing signs of fracture, etching or wear. Check the piston pin fit in the piston and connecting rod.

Check the outside diameter of the piston pin and the inside diameter of the pin bore in the piston. Replace any piston pin or piston that is not within specifications. Refer to Specifications in this section.

Pistons, Fitting

Pistons are available for service in standard size and oversize. Measure the cylinder bore with a cylinder bore micrometer for size, taper and out-of-round. Measure the piston diameter with an outside micrometer. Determine if piston-to-bore clearance, taper and out-of-round are within specifications. If not within specifications, the cylinder will have to be bored oversize and rehoned, and oversized pistons will have to be installed. Refer to Cylinder Block in the Cleaning and Inspection portion of this section.

Piston Pins, Fitting

1. Measure piston pin bore inside diameter.
2. Measure piston pin outside diameter.
3. Subtract piston pin outside diameter from pin bore inside diameter to determine clearance.
4. Check to see if clearance is acceptable. Refer to Specifications at the end of this section. If clearance is not within specifications, replace component that is not within specification.

Piston Rings, Fitting

1. Position piston ring in cylinder bore in which it is going to be used.
2. Push piston ring down into bore area where normal ring wear is not encountered.
3. **CAUTION: Use caution to avoid damage to piston ring or cylinder bore.**

   Position piston ring in bore so piston ring is square with cylinder wall.

CLEANING AND INSPECTION (Continued)

4. Measure gap between ends of piston ring with a feeler gauge. If piston ring end gap is greater than specified limits, try another partial piston ring set (6148). If piston ring end gap is less than specified limits, carefully file piston ring ends to achieve correct piston ring end gap. Refer to Specifications in this section.

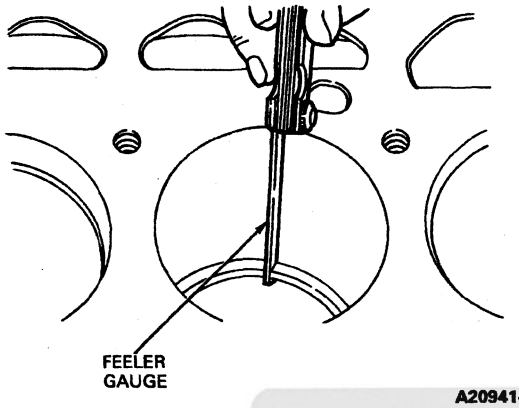

5. NOTE: Always use a piston ring expanding tool to install rings on a piston.

   Install piston rings.
6. Check ring side clearance of second compression ring with a feeler gauge inserted between piston ring and its lower land. Gauge should slide freely around entire ring circumference without binding. Any wear that occurs will form a step at inner portion of lower land. If lower lands have high steps, piston should be replaced.
7. Piston rings should be staggered on the piston to make sure the piston ring end gaps are not aligned.

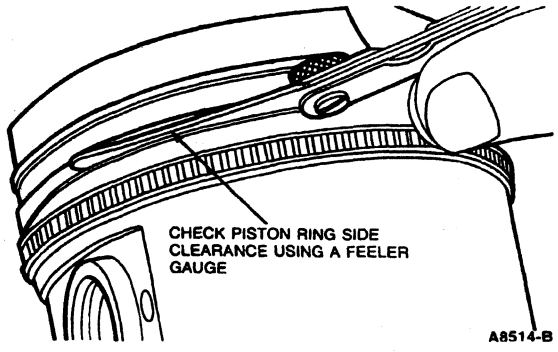

Connecting Rods

SPECIAL SERVICE TOOL(S) REQUIRED

Description	Tool Number
Piston Pin Remover/Replacer	T68P-6135-A

Cleaning

Remove the connecting rod bearings (6211) from the connecting rod (6200) and connecting rod cap. Identify each connecting rod bearing location if they are to be used again. Clean the connecting rod in solvent, including the rod bore and the back of the bearing inserts. Do not use a caustic cleaning solution. Blow out all passages with compressed air.

Inspection

1. Measure the inside diameter of the connecting rod bushing (6207) using a telescoping gauge and a micrometer. If connecting rod bushings are out of specification, new connecting rod bushings must be installed.

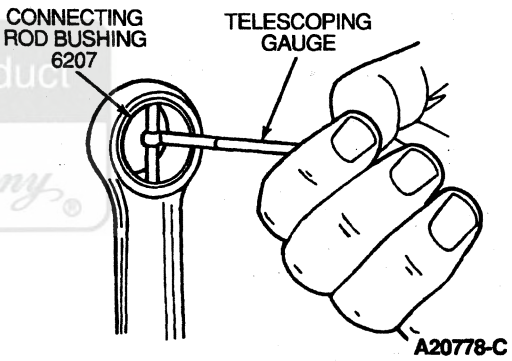

2. Remove any worn connecting rod bushing using Piston Pin Remover/Replacer T68P-6135-A.
3. Place the connecting rod under a hydraulic press in line with the properly sized hole on the support block and use Piston Pin Remover/Replacer T68P-6135-A to press out the connecting rod bushing.

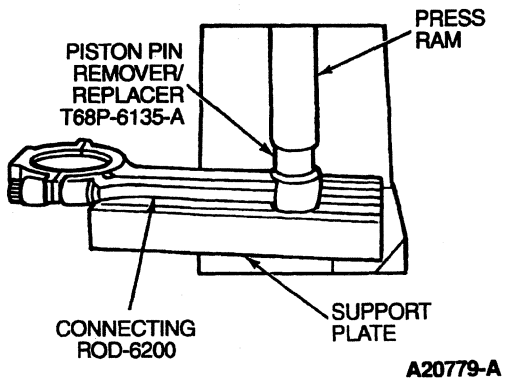

Ford Motor Company Official Licensed Product

CLEANING AND INSPECTION (Continued)

4. Clean the connecting rod thoroughly and visually inspect for defects.
5. Using a telescoping gauge and a micrometer, check the connecting rod bushing bore diameter.

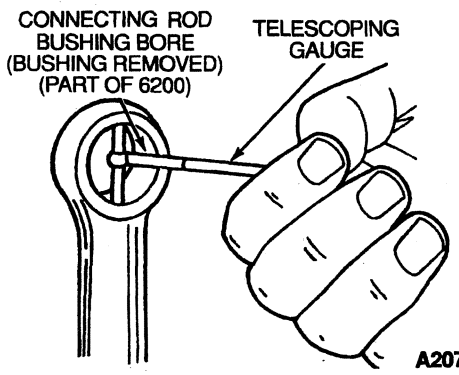

A20780-C

6. NOTE: Measure connecting rod bearing bore diameter with connecting rod nut tightened to specified torque.

   Inspect the crankshaft end of the connecting rod as follows:

   a. Measure connecting rod bearing bore diameter.

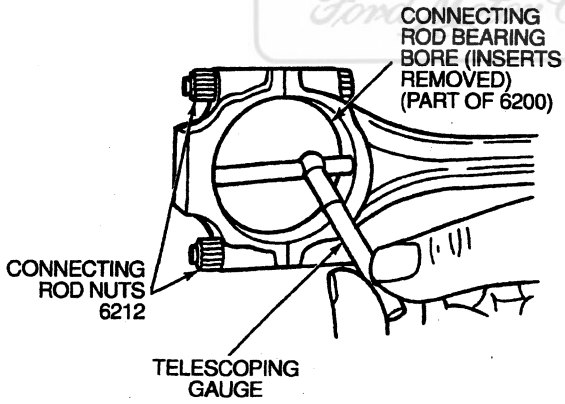

A20781-B

   b. With the connecting rod bolt (6214) assembled and connecting rod bolts and connecting rod nuts (6212) tightened to specification, use a dial bore gauge indicator to measure out-of-round. Replace connecting rod if maximum out-of-round specification is exceeded. Refer to Specifications at the end of this section.

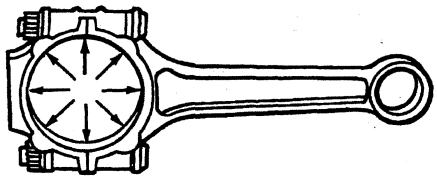

A20782-B

   c. Measure the connecting rod bore taper by measuring the bore inside diameter near the large chamfer. Record reading and measure the bore inside diameter near the small chamfer; record reading. The difference between the two readings is the bore taper. Replace connecting rod if maximum bore taper is exceeded.

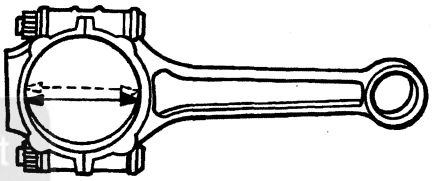

A20783-B

   d. With the connecting rod cap removed, visually inspect the surface finish of the connecting rod bearing bore. The connecting rod bearing bore must be smooth and free of scoring or nicks.

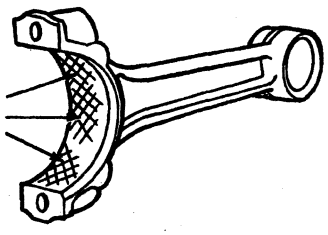

A20784-B

7. An engine component wear pattern can be identified and used to diagnose a problem. Following are common examples of connecting rod wear pattern diagnostic hints.
   - A shiny surface on the edge of the connecting rod bushing usually indicates that a connecting rod is bent or a piston pin hole is not in proper relation to piston skirt and ring grooves.
   - Abnormal connecting rod bearing wear can be caused by either a bent connecting rod, an improperly machined journal, or a tapered connecting rod bore.

Official Licensed Product
Ford Motor Company

CLEANING AND INSPECTION (Continued)

- Twisted connecting rods will not create an easily identifiable wear pattern, but badly twisted connecting rods will disturb the action of the entire piston, piston rings, and connecting rod and may be the cause of excessive oil consumption.

8. Install a new connecting rod bushing using Piston Pin Remover / Replacer T68P-6135-A as follows:
   a. Place the new connecting rod bushing on Piston Pin Remover / Replacer T68P-6135-A and lubricate the connecting rod bushing outside diameter with clean engine oil.
   b. Place the connecting rod on a flat surface plate with the large chamfer side of the main bearing bore up.
   c. Press the new connecting rod bushing in place flush or below the surfaces of both sides of the connecting rod.

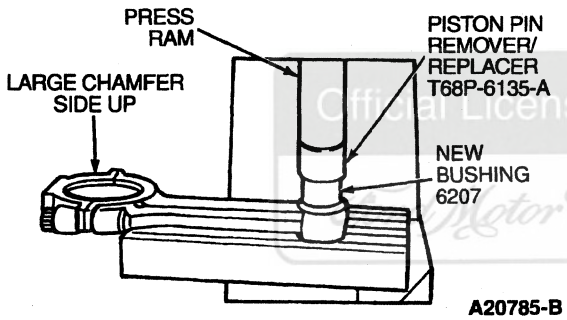

A20785-B

9. After the connecting rod bushing has been installed in the connecting rod, it must be honed to the proper inside diameter. Refer to Specifications at the end of this section.

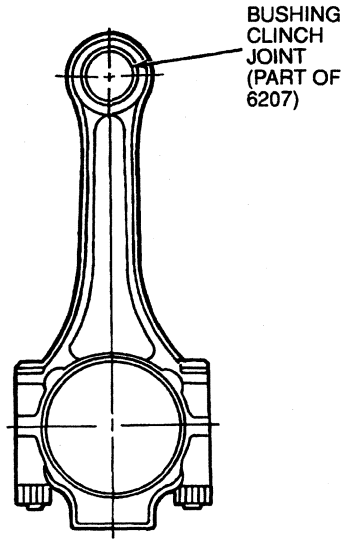

A20786-C

10. NOTE: The connecting rod end clearance must be checked to be certain that the specified clearance exists. Lack of clearance could indicate a damaged connecting rod or a connecting rod bearing out of position. Correct as required. Excessive clearance may require replacement of the crankshaft (6303).

    Check the connecting rod side clearance, using a feeler gauge.

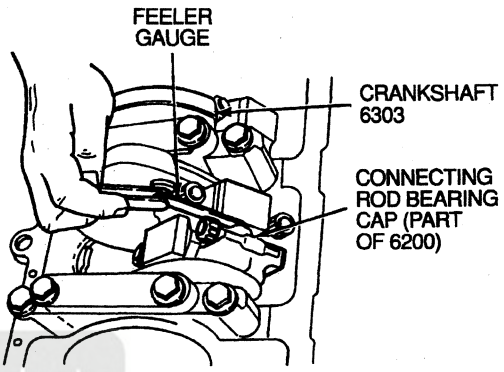

A23346-A

Camshaft

Cleaning

Clean camshaft (6250) in solvent and wipe dry. Inspect camshaft lobes for scoring and signs of abnormal wear. Camshaft should not be replaced unless camshaft lobe lift loss has exceeded specifications.

Inspection

Check camshaft lobe lift with camshaft installed in engine or on centers. Refer to Section 03-00.

Check fuel pump eccentric for excessive wear.

Camshaft Timing — Front Cover Installed

Inspection

1. Align timing mark on crankshaft vibration damper (6316) with the timing mark on the camshaft position sensor (CMP sensor)(6B288).
2. Remove camshaft position sensor electrical connector from camshaft position sensor.
3. Remove screw retaining the camshaft position sensor to the engine front cover (6019). Remove the camshaft position sensor.
4. Verify Top Dead Center (TDC) for No. 1 cylinder. Inspect camshaft position sensor bore in the engine front cover. Verify that the narrow gap vane on the camshaft drive gear is located in the middle of the bore.

Official Licensed Product Ford Motor Company

CLEANING AND INSPECTION (Continued)

5. If the narrow gap vane is at the top or the bottom of the bore, the camshaft timing is off one tooth and requires service.
6. If the narrow gap vane is not visible in the bore, reverify TDC No. 1 cylinder. If the narrow gap vane is still not visible, mechanical timing service is required.
7. Reinstall the camshaft position sensor.
8. Install the camshaft position sensor electrical connector.

Camshaft Timing — Front Engine Cover Installed

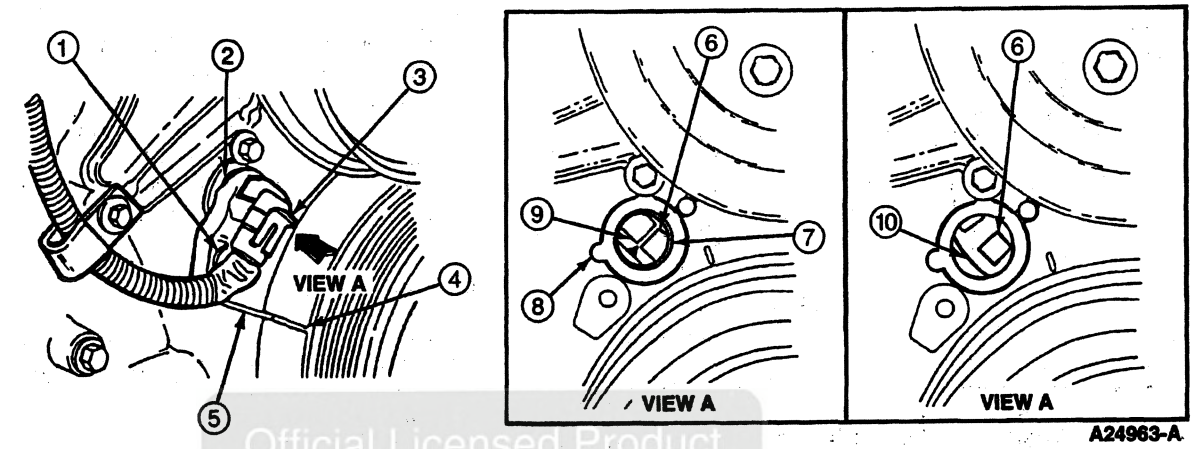

Official Licensed Product

Item	Part Number	Description
1	—	Screw
2	6B288	Camshaft Position Sensor
3	—	Camshaft Position Sensor Electrical Connector (Part of 12A581)
4	—	Harmonic Damper Timing Mark (Part of 6316)
5	—	Camshaft Position Sensor Timing Mark (Part of 6E004)

Item	Part Number	Description
6	6256	Camshaft Drive Gear
7	—	Camshaft Position Sensor Bore (Part of 6E004)
8	6019	Engine Front Cover
9	—	Narrow Gap Vane (Proper Timing)
10	—	Large Gap Vane (Improper Timing)

(Continued)

CLEANING AND INSPECTION (Continued)

Valve Tappets

NOTE: If any part of valve tappet (6500) needs replacing, replace the entire valve tappet.

Valve tappets should be kept in proper sequence to permit installation into original position. Inspect and test each valve tappet separately to prevent intermixture of internal parts.

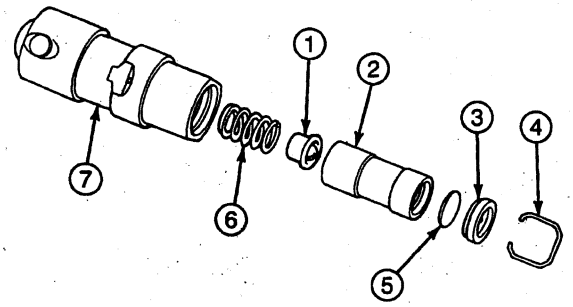

A23373-A

Item	Part Number	Description
1	—	Plunger (Part of 6500)
2	—	Plunger Body (Part of 6500)
3	—	Push Rod Seat (Part of 6500)
4	—	Retainer (Part of 6500)
5	—	Metering Valve (Part of 6500)
6	—	Plunger Spring (Part of 6500)
7	—	Tappet Body (Part of 6500)

Disassembly

1. Remove retainer with small screwdriver.
2. Remove push rod seat and metering valve.
3. Remove plunger and plunger spring.

Cleaning

Thoroughly clean all parts in clean solvent and wipe with a clean, lint-free cloth.

Inspection

Inspect parts and discard the entire valve tappet if any part shows excessive wear or damaged roller is evident. Replace entire assembly if the plunger is not free in plunger body. Plunger should drop to bottom of plunger body by its own weight when assembled dry.

Roller should rotate freely, without excessive play. Check for missing or broken needle bearings. Roller should be free of pits or roughness. If present, inspect camshaft lobes for similar condition. If pits or roughness are evident, replace valve tappet.

Assembly

1. Coat all parts with clean engine oil.
2. Install plunger spring and plunger into tappet body.
3. Install metering valve and push rod seat into tappet body and install retainer.
4. Check for free operation by pressing down on the push rod seat. Valve tappets can also be checked with a hydraulic tester to test leak-down rate. Follow instructions provided with test unit.

Oil Pump Inspection

Pressure Test

1. NOTE: Before removing low-pressure oil pump, perform the oil pump pressure test procedure as follows:

   Attach oil pressure gauge to an accessible oil galley port.
2. Start engine, observe oil pressure gauge. Oil pressure reading should be between 69-276 kPa (10-40 psi). If readings are below the specifications, remove the low-pressure oil pump. Refer to Oil Pump in the Removal and Installation portion of this section. Then perform the following inspection steps:

Clearance Test

1. Inspect low-pressure oil pump (6600) for excessive metal particles.
2. Inspect oil pump front cover for gouging or deep scratches.
3. Inspect the oil pump inner and outer rotor for damage or excessive wear.
4. Using a straightedge and feeler gauge, measure the height clearance between the oil pump housing and the inner rotor and outer rotor.

Ford Motor Company Licensed Product

CLEANING AND INSPECTION (Continued)

5. Using a feeler gauge, measure the clearance between the outer rotor and oil pump housing.

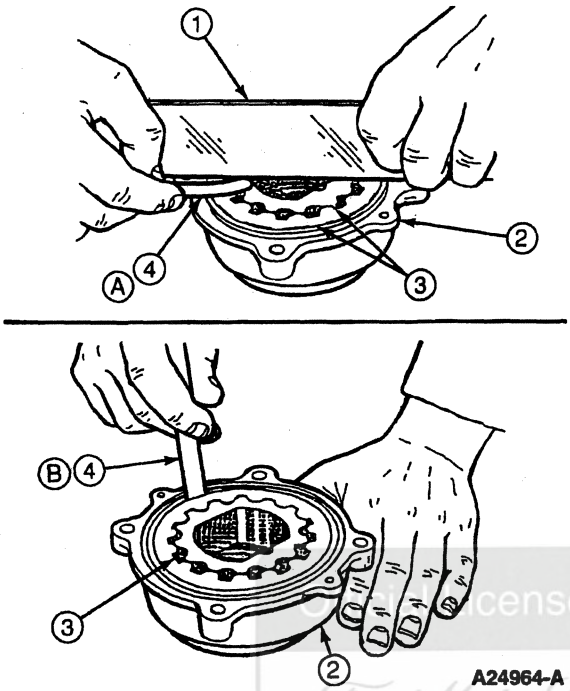

Item	Part Number	Description
1	—	Straightedge
2	6616	Oil Pump Housing
3	6608	Rotor and Shaft Set
4	—	Feeler Gauge
A	—	0.02-0.08 mm (0.001-0.003 In.)
B	—	0.72-0.81 mm (0.028-0.032 In.)

Oil Pan

Cleaning

Scrape any dirt or metal particles from inside of oil pan (6675). Scrape or wire brush all old gasket material from gasket surface. Wash oil pan in a degreasing solvent and dry it thoroughly. Make sure all foreign particles are removed from below baffle plate.

Inspection

Check oil pan for cracks, holes and damaged drain plug threads. Check gasket surface for damage caused by overtightened bolts. Straighten surface as required to restore original flatness.

Replace oil pan if repairs cannot be made.

Cylinder Heads

Cleaning

CAUTION: Be careful not to damage cylinder head gasket surface.

With valves installed to protect the seats, remove deposits from the combustion chambers and valve heads with a scraper and a wire brush. After valves are removed, clean valve guide bores with a valve guide cleaning tool. Use cleaning solvent to remove dirt, grease and other deposits; clean all tapped bolt holes; make sure valve seats, gasket surfaces and oil return passages are clean. Clean all valve assembly components using a suitable solvent and dry thoroughly.

Inspection

1. Examine cylinder head (6049) for cracks in combustion chambers, intake and exhaust valve ports, and around intake valve seats. Inspect exhaust valve seats for burned or cracked condition. Inspect gasket and sealing surfaces for scratches or mars which may cause leakage after assembly.

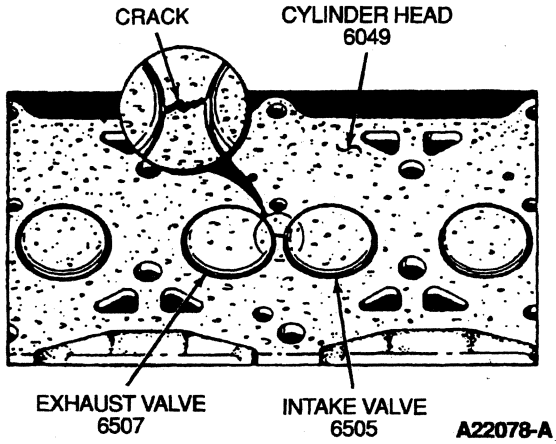

Ford Licensed Product
Ford Motor Company

CLEANING AND INSPECTION (Continued)

2. NOTE: Cylinder heads cannot be resurfaced. Replace cylinder head if it is cracked or warped.

   To determine if cylinder head has previously been resurfaced, use an outside micrometer and measure cylinder head thickness at four locations. If minimum specification is not met, replace the cylinder head. Refer to Specifications at the end of this section.

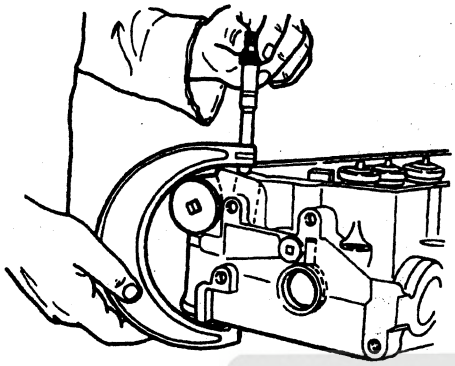

A23345-A

3. Measure valve seat width. Reface valve seat(s) if width is not within specifications. Refer to Specifications at the end of this section.

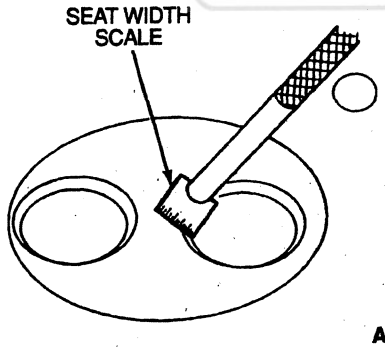

A22074-A

Cylinder Head Flatness

Using a straightedge and a 0.15-mm (0.006-inch) feeler gauge, check cylinder head gasket surface for warpage horizontally, diagonally and transversely. Check cylinder block deck for flatness in the same manner. Refer to Specifications at the end of this section.

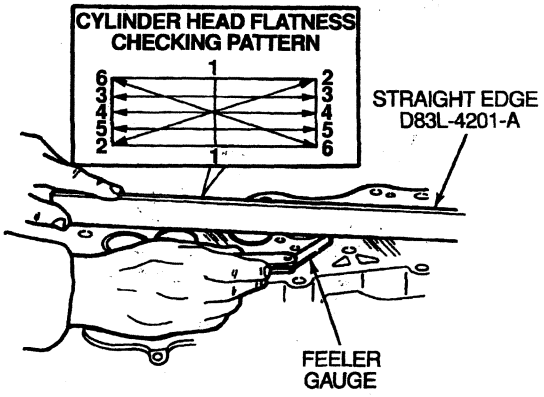

A23344-A

Valves

Critical inspection points and tolerances of valve are illustrated. Refer to Specifications at the end of this section for service limits. Remove all carbon from valve stems and valve heads using a fine wire brush or buffing wheel.

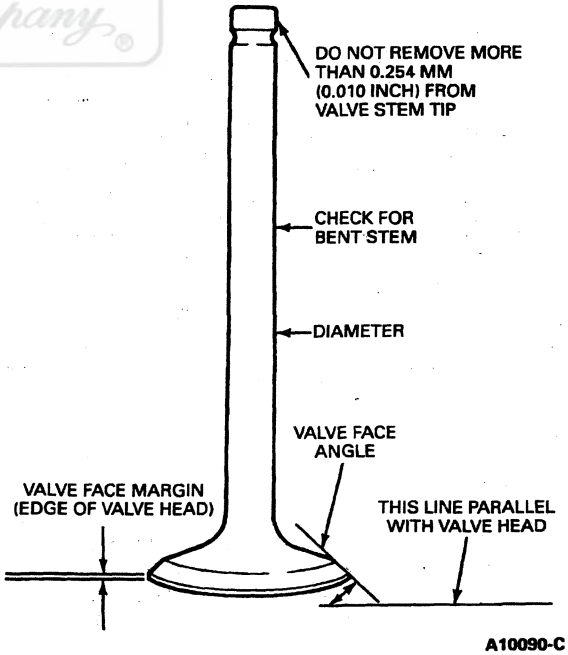

A10090-C

Inspect valve face and edge of valve head for pits, grooves or scores. Inspect stem for a bent condition and end of stem for grooves or scores. Check valve head for signs of burning or erosion, warpage and cracking. Minor pits, grooves, etc., may be removed. Discard severely damaged valves.

Official Licensed Ford Motor Company

CLEANING AND INSPECTION (Continued)

Visually inspect valve springs (6513), valve spring rotators and valve spring retainer keys (6518), and discard any damaged parts.

Inspect valve spring retainer keys for excessive wear and replace in pairs as required. When installing a new valve, always use new valve spring retainer keys.

Valve Stem-to-Valve Guide Clearance

Check valve stem to valve guide clearance of each valve in its respective valve guide with Valve Stem Clearance Tool TOOL-6505-F, Dial Indicator D78P-4201-G and Dial Indicator Bracketry D78P-4201-F or equivalents. Use a flat-end indicator point.

Install tool onto valve stem until fully seated, and tighten knurled setscrew firmly. Permit valve to drop away from its seat until tool contacts upper surface of valve guide.

Position dial indicator with its flat tip against center portion of tool's spherical section at approximately 90 degrees to valve stem axis. Move tool back and forth in line with indicator stem. Take a reading on dial indicator without removing tool from valve guide upper surface. Divide reading by two, the division factor for tool. If valve stem to valve guide clearance exceeds specifications listed at the end of this section, replace cylinder head (6049).

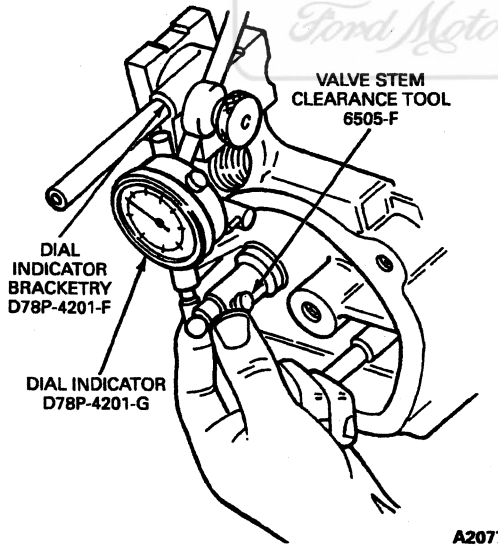

A20777-A

Valve Face Runout

Check valve face runout. It should not exceed specifications listed at the end of this section. If runout exceeds service limit, valve should be replaced or refaced.

Valves, Refacing

CAUTION: Interference fit of valve and seat should not be lapped out.

The valve refacing operation should be closely coordinated with valve seat refacing operations so that finished angles of valve face of valve seat will be to specifications and provide a compression tight fit. Make sure valve grinding wheels are properly dressed.

If valve face runout is excessive or to remove pits and grooves, reface valves to specification. Remove only enough stock to correct runout or to clean up pits and grooves. If intake valve margin is less than 2.84 mm (0.112 inch) thick after grinding, replace valve or valve will run too hot in engine. If exhaust valve margin is less than 1.35 mm (0.053 inch) thick after grinding, replace valve.

Critical Valve Dimensions

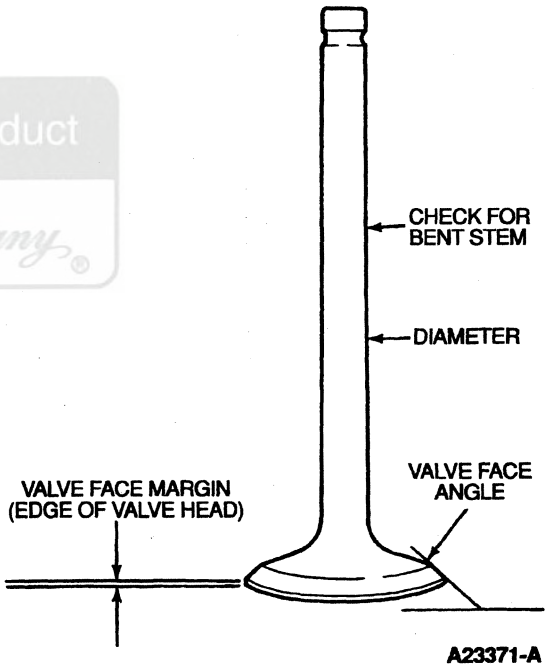

A23371-A

CAUTION: Do not remove more than 0.254 mm (0.010 inch) from valve stem tip.

Remove all grooves or score marks from end of valve stem, and chamfer it as necessary.

Official Licensed Product
Ford Motor Company

CLEANING AND INSPECTION (Continued)

Valve Seat Runout

Check valve seat runout with suitable valve seat Runout Gauge. Follow instructions of gauge manufacturer. If runout exceeds service limit, reface valve and valve seat. Refer to Specifications at the end of this section.

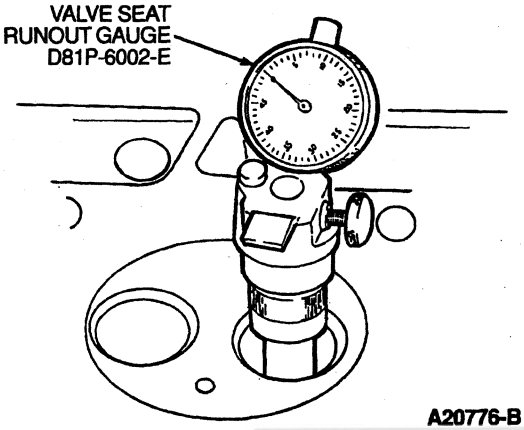

A20776-B

Valve Seat Refacing

CAUTION: Fit of valve and seat should never be lapped out with lapping compounds.

Refacing of valve seat should be closely coordinated with refacing of valve face so that finished seat and valve face will be concentric and specified interference fit will be maintained. This is important so that valve and seat will have a compression tight fit. Make sure valve seat grinding wheels are properly dressed.

Grind valve seats to specification listed at the end of this section. Remove only enough stock to clean up pits and grooves or to correct valve seat runout. After seat has been refaced, use seat width scale or machinist's scale to measure seat width. Narrow seat if necessary to bring it within specification. Refer to specifications listed at the end of this section.

If valve seat width exceeds maximum limit, remove enough stock from top edge or bottom edge of seat to reduce width to specification. Refer to Specifications at the end of this section.

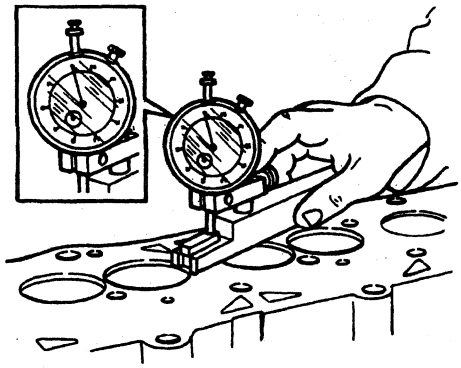

A23327-A

Use a 60-degree angle grinding wheel to remove stock from bottom of seats (raise seats) and use a 15-degree angle wheel to remove stock from top of seats (lower seats).

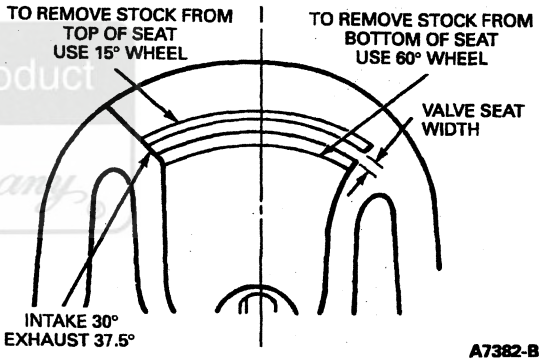

A7382-B

Finished valve seat should contact approximate center of valve face. It is good practice to determine where valve seat contacts face. To do this, coat seat with Prussian blue and set valve in place. Rotate valve with light pressure. If blue is transferred to center of valve face, contact is satisfactory. If blue is transferred to top edge of valve face, lower valve seat. If blue is transferred to bottom edge of valve face, raise valve seat.

Valve Guide Removal

The valve guides on this engine are not serviceable. Replace cylinder head if valve stem to valve guide clearance exceeds specifications listed at the end of this section.

Valve Spring Tension

Inspect the valve spring, valve spring rotators, and valve spring retainer keys for wear or damage. Discard any damaged parts.

Official Licensed Product

CLEANING AND INSPECTION (Continued)

Check the valve springs for proper pressure at the specified spring lengths using Valve / Clutch Spring Tester TOOL-6513-DD or equivalent. Apply torque until click is heard; read torque wrench and multiply reading by two. Weak valve springs cause poor engine performance. Replace any valve spring not within specification. Refer to Specifications at the end of this section. Manually rotating the valve springs while installed in the engine will not determine condition of valve springs.

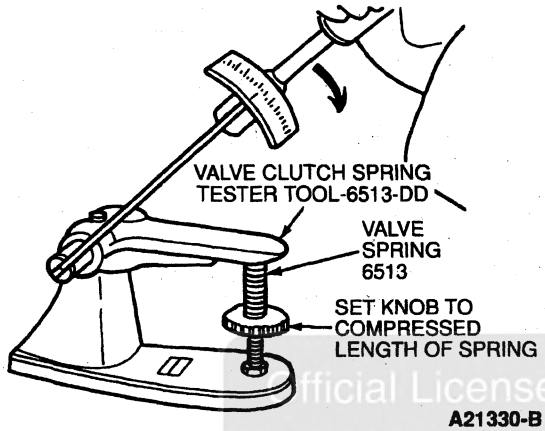

A21330-B

Valve Spring Squareness

Check each valve spring for squareness using a steel square and a flat surface. Stand the valve spring and square on end of the flat surface. Slide the valve spring up to the square. Revolve the valve spring slowly and observe the space between the top coil of the valve spring and the square. Refer to the following illustration.

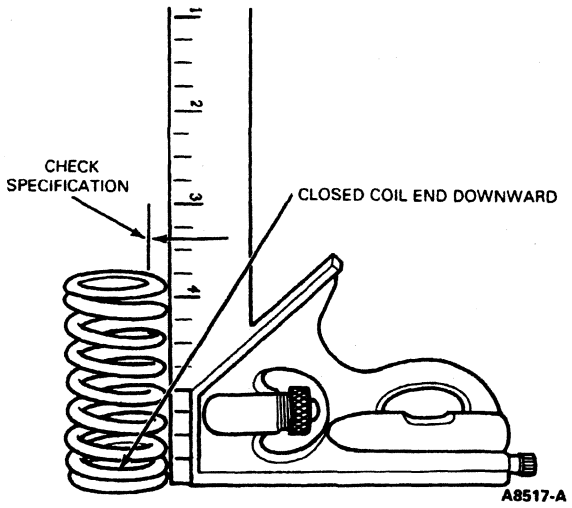

A8517-A

Refer to Specifications at the end of this section for out-of-square limits. Follow the same procedure for new valve springs before installation.

Rocker Arm

Cleaning

Clean all parts thoroughly.

Inspection

CAUTION: Do not attempt to true this surface by grinding.

Inspect pad at valve end of rocker arm for indications of scuffing or abnormal wear. If pad is grooved, replace rocker arm (6564).

Check rocker arm steel ball and friction surfaces of rocker arm and rocker arm pedestal for excessive wear.

Push Rods

Cleaning

Clean the push rods (6565) in a suitable solvent. Blow out the oil passage in the push rods with compressed air.

Inspection

NOTE: Do not attempt to straighten push rods.

Check the ends of the push rods for nicks, grooves, roughness or excessive wear. Replace damaged push rods.

The push rods can be visually checked for straightness while they are installed in the engine by rotating them with the valve closed. They also can be checked with a dial indicator.

If the push rod is bent beyond specifications, it should be replaced.

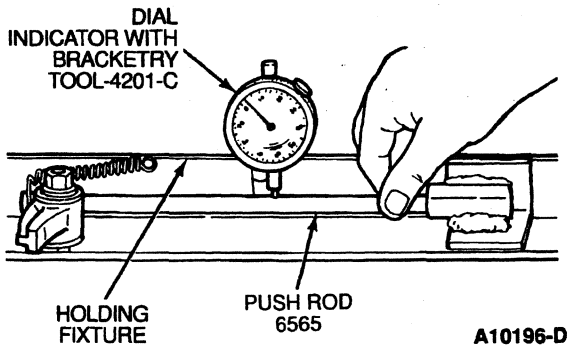

A10196-D

Intake Manifold

Cleaning

Remove all RTV gasket material from mating surfaces of intake manifold cover (9E434). Clean intake manifold cover in a suitable solvent and dry with compressed air.

Official Licensed Product Ford Motor Company

CLEANING AND INSPECTION (Continued)

Inspection

Inspect intake manifold cover for cracks, nicked gasket surfaces or other damage that would make it unfit for further service. Inspect cylinder head mounting faces of intake manifold cover with a straightedge for warpage. Replace intake manifold cover if excessively warped or cracked. Refer to Specifications in this section.

Exhaust Manifolds

Cleaning

Clean exhaust manifold (9430) mating surfaces.

Inspection

Inspect exhaust manifold(s) for cracks, damaged gasket surfaces, or other wear or damage that would make them unfit for further service. Inspect cylinder head joining flanges of exhaust manifold(s) for evidence or warpage with a straightedge. Minor warpage can be corrected by surface grinding. If warpage is extreme, replace exhaust manifold. Refer to Specifications at the end of this section.

Flywheel Inspection

Clean flywheel with a non-caustic solvent, then visually inspect flywheel for cracks, evidence of overheating, or extensive scoring (manual transmission only).

Transmission, Manual

Inspect the flywheel for cracks, heat check, or other damage that would make it unfit for further use. Acceptable flywheels may be repaired by polishing with fine grade (400 grit) sandpaper. Flywheels may be surfaced to remove scratches or grooves. After resurfacing, the flywheel thicknesses must not be less than the dimensions noted in Flywheel Clutch Face Machining in the Cleaning and Inspection portion of this section.

With flywheel installed on crankshaft (6303), check flywheel face runout. Refer to Section 03-00.

Transmission, Automatic

Inspect the flexplate for cracks or other damage that would make it unfit for further service. Inspect the flexplate ring gear for worn, chipped or cracked teeth. If the teeth are damaged, replace the ring gear and flexplate assembly.

Flywheel Clutch Face Machining

Inspect flywheel clutch mating surface. Machine friction surface of flywheel if it is scored or worn. If it is necessary to remove more than 1.524 mm (0.060 inch) of stock from original thickness, or if flywheel thickness is less than 35.8 mm (1.41 inch) after refacing, replace secondary flywheel. If necessary, refer to Flywheel, Dual Mass in the Removal and Installation portion of this section.

CAUTION: Installation of a secondary flywheel less than 35.8 mm (1.41 inch) thick can cause primary flywheel damage.

Official Licensed Product

ADJUSTMENTS

Engine

Refer to the Powertrain Control / Emissions Diagnosis Manual.[2]

2 Can be purchased as a separate item.

SPECIFICATIONS

ENGINE SPECIFICATIONS

Bore and Stroke	Firing Order	Oil Pressure Hot @ 3300 rpm kPa (psi)	Engine Type and Number of Cylinders	Compression Ratio
4.11 In. x 4.18 In.	1-2-7-3-4-5-6-8	276-482 kPa (40-70)	O.H.V. V-8	17.5 to 1

DRIVE BELT TENSION

Tensioning Method	Belt Tension
Automatic	378 N (85 Lb) Min.

CYLINDER HEAD

Valve Guide Bore Diameter		Valve Seat Width [a]		Valve Seat Runout TIR Maximum	Valve Arrangement Front to Rear	Gasket Surface Flatness[b]	Deck-to-Deck Dimension
Intake	Exhaust	Intake	Exhaust				
0.3141 In. 0.3151 In.	0.3141 In. 0.3151 In.	1.651-2.413 mm (0.065 In.-0.095 In.)	1.651-2.413 mm (0.065 In.-0.095 In.)	0.05 mm (0.002 In.)	LT I-E-I-E-I-E-I-E RT E-I-E-I-E-I-E-I	0.025 mm (0.001 In.) in 2 In. 0.10 mm (0.004 In.) Overall	129.41-129.67 mm (5.095-5.105 In.)

a Valve seat angle — intake 30 degrees and exhaust 37.5 degrees.
b Gasket surface finish — 1,600-3,175 mm (63-125 in.)

Official Licensed Product

ROCKER ARM SHAFT, PUSH RODS AND VALVE TAPPETS

Type	Push Rod Runout TIR Maximum	Valve Tappet or Lifter			Collapsed Tappet Gap (Clearance)[c]
		Standard Diameter	Clearance to Bore[a]	Hydraulic Lifter Leak-Down Rate[b]	
Hydraulic Roller Follower	0.5 mm Max. (0.02 In.)	23.391-23.411 mm (0.9209 In.-0.9217 In.)	0.027-0.086 mm (0.0011 In.-0.0034 In.)	18-90 Sec. for 0.125 In. Travel	0.185 Max.

a Service limit — 0.005.
b Time required for plunger to move 3.17 mm (0.125 in.) under load of 50 lb with test fluid at room temperature.
c Measured at valve tip to rocker arm.

VALVE SPRINGS

Valve Spring Compression Pressure Lb @ Specified Height		Valve Spring Free Length (Approximate)		Valve Spring Assembled Height		Valve Spring Out of Square Maximum
Intake[a]	Exhaust[a]	Intake	Exhaust	Intake	Exhaust	
71-79 Lb@ 1.833 206-220 Lb @ 1.352	71-79 Lb @ 1.833 206-220 Lb @ 1.352	52.70 mm ± 3.8 mm (2.075 In. ± 0.150 In.)	52.70 mm ± 3.8 mm (2.075 In. ± 0.150 In.)	44.881 mm (1.767 In.)	46.558 mm (1.833 In.)	1.981 mm (0.078 In.)

a Service limit — ±8 lb.

VALVES

Valve Stem-to-Guide Clearance[a]		Valve Face Angle		Valve Face Runout TIR Maximum
Intake	Exhaust	Intake	Exhaust	
0.140 mm (0.0055 In.)	0.140 mm (0.0055 In.)	30 Degrees	37.5 Degrees	0.050 mm (0.002 In.)

a Service clearance — 0.0055.

SPECIFICATIONS (Continued)

VALVES (Continued)

Minimum Valve Face Margin — Intake Valves	Minimum Valve Face Margin — Exhaust Valves	Valve Stem Diameter	Valve Head Recession Relative to Deck Surface	
			Intake	Exhaust
1.67 mm (0.066 In.)	1.37 mm (0.054 In.)	7.921-7.939 mm (0.31185-0.31255 In.)	1.17-1.47 mm (0.046-0.058 In.)	1.32-1.63 mm (0.052-0.064 In.)

CAMSHAFT

End Play	Camshaft Journal to Bearing Clearance	Intake — Lobe Lift	Exhaust — Lobe Lift	Camshaft Thrust Plate Thickness	
				Thrust Area	Outside of Thrust Area
0.051-0.203 mm (0.002-0.008 In.)	0.051-0.165 mm (0.002-0.006 In.)	6.44 mm (0.2535 In.) Max.	6.43 mm (0.2531 In.) Max.	3.910-3.961 mm (0.154-0.156 In.)	3.784-3.987 mm (0.149-0.157 In.)

CAMSHAFT DRIVE

Camshaft Bearing Inside Diameter[a]					Camshaft Front Bearing Location[b]	Gear Backlash
No. 1	No. 2	No. 3	No. 4	No. 5		
53.39-53.48 mm (2.102-2.105 In.)	53.39-53.48 mm (2.102-2.105 In.)	53.39-53.48 mm (2.102-2.105 In.)	53.39-53.48 mm (2.102-2.105 In.)	53.39-53.48 mm (2.102-2.105 In.)	0.020-0.050 Inch	0.140-0.256 mm (0.0055-0.010 In.)

a All camshaft journals are 53.31-53.34 mm (2.099-2.100 in.).
b Distance in inches that front edge of the bearing is installed below the front face of the cylinder block.

Offered Licensed Property
Ford Motor Company

CYLINDER BLOCK

Cylinder Bore Diameter[a]	Main Bearing Inside Diameter[b]	Head Gasket Surface Flatness	Head Gasket Surface Finish	Bore Size
Standard	84.206-84.231 mm (3.3152-3.3162 In.)	0.003 In. in any 6 In. 0.006 In. Overall	RMS 63-125	104.384-104.402 mm (4.1096-4.1103 In.)
0.010 Oversize	84.206-84.231 mm (3.3152-3.3162 In.)	0.003 In. in any 6 In. 0.006 In. Overall	RMS 63-125	104.502 mm (4.11425 In.)
0.020 Oversize	84.206-84.231 mm (3.3152-3.3162 In.)	0.003 In. in any 6 In. 0.006 In. Overall	RMS 63-125	104.756 mm (4.12425 In.)
0.030 Oversize	84.206-84.231 mm (3.3152-3.3162 In.)	0.003 In. in any 6 In. 0.006 In. Overall	RMS 63-125	105.010 mm (4.13425 In.)

a Maximum out-of-round — 0.013 mm (0.0005 in.); maximum taper — 0.013 mm (0.0005 in.); cylinder bore surface finish — RMS 15-30.
b With bearing caps tightened in place.

CRANKSHAFT AND FLYWHEEL

Crankshaft Diameter	Main Bearing Journal Diameter	Main Bearing Journal Out-of-Round Maximum	Main Bearing Thrust Face Runout TIR Maximum	Main Bearing Journal Taper Maximum per Inch	Thrust Bearing Journal Width	Main and Rod Bearing Journal Finish RMS Maximum	Main Bearing Thrust Face Finish RMS Maximum
Standard	79.139-79.340 mm (3.1228-3.1236 In.)	0.0056 mm (0.00022 In.)	0.025 mm (0.001 In.)	0.0038 mm (0.00015 In.)	31.509-31.585 mm (1.2405-1.2435 In.)	10	20
0.010 Undersize	79.065-79.085 mm (3.1128-3.1136 In.)	0.0056 mm (0.00022 In.)	0.025 mm (0.001 In.)	0.0038 mm (0.00015 In.)	31.509-31.585 mm (1.2405-1.2435 In.)	10	20

(Continued)

SPECIFICATIONS (Continued)

CRANKSHAFT AND FLYWHEEL (Cont'd)

Crankshaft Diameter	Main Bearing Journal Diameter	Main Bearing Journal Out-of-Round Maximum	Main Bearing Thrust Face Runout TIR Maximum	Main Bearing Journal Taper Maximum per Inch	Thrust Bearing Journal Width	Main and Rod Bearing Journal Finish RMS Maximum	Main Bearing Thrust Face Finish RMS Maximum
0.020 Undersize	78.811-78.831 mm (3.1028-3.1036 In.)	0.0056 mm (0.00022 In.)	0.025 mm (0.001 In.)	0.0038 mm (0.00015 In.)	31.509-31.585 mm (1.2405-1.2435 In.)	10	20
0.030 Undersize	78.557-78.577 mm (3.0928-3.0936 In.)	0.0056 mm (0.00022 In.)	0.025 mm (0.001 In.)	0.0038 mm (0.00015 In.)	31.509-31.585 mm (1.2405-1.2435 In.)	10	20

CRANKSHAFT AND FLYWHEEL (Continued)

Crankshaft Diameter	Connecting Rod Journal Diameter[a]	Connecting Rod Journal Taper per Inch Maximum	Crankshaft End Play[b]	Flywheel and Ring Gear Runout	Flywheel and Ring Gear Concentricity
Standard	63.45-63.47 mm (2.4980-2.4990 In.)	0.0066 mm (.00026 In.)	0.063-0.216 mm (0.0025-0.0085 In.)	0.203 mm (0.008 In.)	0.203 mm (0.008 In.)
0.010 Undersize	63.20-63.22 mm (2.488-2.489 In.)	0.0066 mm (.00026 In.)	0.063-0.216 mm (0.0025-0.0085 In.)	0.203 mm (0.008 In.)	0.203 mm (0.008 In.)
0.020 Undersize	62.94-62.96 mm (2.478-2.479 In.)	0.0066 mm (.00026 In.)	0.063-0.216 mm (0.0025-0.0085 In.)	0.203 mm (0.008 In.)	0.203 mm (0.008 In.)
0.030 Undersize	62.69-62.71 mm (2.468-2.469 In.)	0.0066 mm (.00026 In.)	0.063-0.216 mm (0.0025-0.0085 In.)	0.203 mm (0.008 In.)	0.203 mm (0.008 In.)

a Maximum out-of-round — 0.0056 mm (0.00022 in.).
b Service limit — 0.51 mm (0.020 in.).

Ford Motor Company

CRANKSHAFT BEARINGS

Connecting Rod Bearing to Crankshaft Clearance		Main Bearing to Crankshaft Clearance	
Desired	Allowable	Desired	Allowable
0.038-0.114 mm (0.0015-0.0045 In.)	0.028-0.091 mm (0.0011-0.0036 In.)	0.046-0.0914 mm (0.0018-0.0036 In.)	0.046-0.117 mm (0.0018-0.0046 In.)

CONNECTING ROD

Rod Bearing I.D.[ab]	Rod Length Center to Center	Connecting Rod Alignment Maximum Total Difference		Rod to Crankshaft Assembled Side Clearance
		Twist/Inch	Bend/Inch	
63.513-63.564 mm (2.5005-2.5025 In.)	181.10 mm (7.130 In.)	0.05 mm (0.002 In.)	0.025 mm (0.001 In.)	0.30-0.61 mm (0.012-0.024 In.)

a Connecting rod bearing bore maximum out-of-round — 0.0005, and maximum bore taper — 0.0005.
b With bearing caps tightened in place.

CONNECTING ROD (Continued)

Piston Pin Bushing Bore I.D.	Crankpin Bearing Bore Diameter	Bearing Bore	
		Max. Out-of-Round	Max. Taper per Inch
36.37-36.41 mm (1.432-1.433 In.)	68.339-68.364 mm (2.6905 In.-2.6915 In.)	0.013 mm (0.0005 In.)	0.013 mm (0.0005 In.)

SPECIFICATIONS (Continued)

PISTON

Skirt Diameter[ab] Standard	Piston to Bore Clearance Selective Fit[c]	Piston Pin Bore Diameter	Piston Height Above Crankcase	Available Oversize Pistons
104.31525-104.33305 mm (4.10689-4.10759 In.)	See Note C Below	33.2359 ± 0.0254 mm (1.3085 ± 0.001 In.)	0.010-0.031 In.	104.5782 mm (4.11725 In.)[d] (Stamped 0.010 In.) 104.8385 mm (4.12725 In.)[d] (Stamped 0.020 In.) 105.08615 mm (4.13725 In.)[d] (Stamped 0.030 In.)

a Measured at 90 degrees to the pin, at 42.77 mm (1.684 in.) below oil ring groove at room temperature.
b Service piston is 4.10475 in. ± 0.00025 in.
c Clearance in cylinder bores: 0.0508-0.0889 mm (0.0020-0.0035 in.).
d Oversize service piston specifications are all ± 0.0064 mm (0.00025 in.).

PISTON PIN

Length	Diameter	To Piston Pin Bore Clearance	To Connecting Rod Bushing Clearance
75.9-76.2 mm (2.99-3.00 In.)	33.220-33.226 mm (1.3079-1.3081 In.)	0.007-0.018 mm (0.0003-0.0007 In.)	0.010-0.023 mm (0.0004-0.0009 In.)

PISTON RINGS

Ring Side Clearance (Second Ring Only)	Ring Gap			
	Compression		Oil	Oversize
	Top	Second		
—	0.35-0.61 mm (0.014-0.024 In.)	1.57-1.83 mm (0.062-0.072 In.)	0.30-0.61 mm (0.012-0.024 In.)	0.010 In. 4.120 In.
0.05-0.10 mm (0.002-0.004 In.)	0.35-0.61 mm (0.014-0.024 In.)	1.57-1.83 mm (0.062-0.072 In.)	0.30-0.61 mm (0.012-0.024 In.)	0.020 In. 4.130 In.
0.05-0.10 mm (0.002-0.004 In.)	0.35-0.61 mm (0.014-0.024 In.)	1.57-1.83 mm (0.062-0.072 In.)	0.30-0.61 mm (0.012-0.024 In.)	0.030 In. 4.140 In.

Official Licensed Product Ford Motor Company

EXHAUST MANIFOLD

Maximum Allowable Warpage	0.13 mm (0.005 In.) Between Ports 0.25 mm (0.010 In.) Total
Maximum Allowable Removal of Material	0.25 mm (0.010 In.)

OIL PUMP, OIL COOLER AND OIL CAPACITY

Oil Pump Pressures		Engine Oil Capacity[a]			Oil Pump Drive Gear Radial Clearance	Oil Pump Drive Gear End Clearance
Curb Idle	3300 rpm	Liters	Imperial Qt	U.S. Qt		
69 kPa (10 psi) Min.	276-482 kPa (40-70 psi) Max.	13.2	11.6	14	0.31-0.81 mm (0.012-0.032 In.)	0.025-0.076 mm (0.001-0.003 In.)

a Add 2 U.S. quarts (1.66 imperial quarts or 1.9 liters) when replacing oil filter.

SPECIFICATIONS (Continued)

Torque Wrench Information

NOTE: Unless otherwise specified, use standard torque chart. Torque values are with threads and washer faces coated with engine oil. Torque values are listed without tolerance. Variations to torque will occur due to torque wrench calibration. Variation should be within 10 percent of nominal values.

STANDARD TORQUE — ENGLISH

Description	N·m	Lb-Ft
1/4-20 UNC	9.5	7
5/16-18 UNC	19	14

(Continued)

STANDARD TORQUE — ENGLISH (Cont'd)

Description	N·m	Lb-Ft
3/8-16 UNC	32	24
7/16-14 UNC	51	38
1/2-13 UNC	81	60

STANDARD TORQUE — METRIC

Bolt or Nut Diameter	Class	N·m	Lb-Ft	Lb-In
M4	9.8	2.6-3.8	—	23-34
M5	9.8	5.0-8.0	—	44-71
M6	9.8	9-13	—	80-115
M8	9.8	21-32	16-24	—
M10	9.8	40-64	30-46	—
M12	9.8	60-95	44-70	—
M14	9.8	100-150	74-110	—
M16	9.8	155-230	114-170	—
M6	10.9	11-17	8-12	—
M8	10.9	28-42	21-31	—
M10	10.9	54-82	40-60	—
M12	10.9	80-120	59-88	—
M14	10.9	130-190	96-140	—
M16	10.9	200-295	147-217	—
M20	10.9	395-570	291-420	—
M24	10.9	685-985	505-726	—

Official Licensed Product Ford Motor Company®

PIPE THREADS

1/8x27	1/4x18	3/8x18	1/2x14
7-11 N·m (5-8 Lb-Ft)	17-24 N·m (12-18 Lb-Ft)	30-44 N·m (22-33 Lb-Ft)	34-47 N·m (25-35 Lb-Ft)

TORQUE SPECIFICATIONS

Description	N·m	Lb-Ft	Lb-In
A/C Compressor Mounting Bracket to Engine	40-55	30-40	—
A/C Compressor Bolt	23-31	17-22	—
A/C Manifold Lines	18-23	13-17	—
Crankshaft Vibration Damper Bolt / Crankshaft Pulley Bolt	287	212	—
Cylinder Head Bolt Torque Step 1	88	65	—
Cylinder Head Bolt Torque Step 2	115	85	—

(Continued)

TORQUE SPECIFICATIONS (Cont'd)

Description	N·m	Lb-Ft	Lb-In
Cylinder Head Bolt Torque Step 3	142	105	—
Connecting Rod Nuts	95	70	—
Engine Front Cover Bolts	20	15	—
Engine Mount Nuts	96-127	71-94	—
Engine Rear Cover Bolts	20	15	—
Exhaust Manifold (To Cylinder Head) (M10)[a]	61	45	—
Fan Clutch to Water Pump	113-153	83-113	—
Fan Shroud Screws	5-8	—	44-71
Flywheel Mounting Bolt (Automatic Transmission)	121	89	—
Flywheel Mounting Bolt[a] (Manual Transmission)	121	89	—
Flywheel Housing Cover Mounting Screws	17-23	13-17	—

(Continued)

SPECIFICATIONS (Continued)

TORQUE SPECIFICATIONS (Cont'd)

Description	N·m	Lb-Ft	Lb-In
Fuel Filter to Cylinder Block	33-52	24-38	—
Fuel Rail End Plug	11	8	—
Fuel Supply Tube Bolt (Banjo Fitting)	55	40	—
Generator Bolt	40-55	30-40	—
Generator Bracket to Cylinder Head	40-55	30-40	—
Glow Plug	19	14	—
Heater Hose Fitting to Water Pump	17-24	13-18	—
High Pressure Oil Pump Gear Bolt	129	95	—
Injection Control Pressure Sensor (ICP)[a]	29	21	—
Intake Manifold Cover Bolts (M8)	24	18	—
Main Bearing Cap Bolts[b]	129	95	—
Oil Cooler to Cylinder Block	[c]	—	—
Oil Cooler Plug	20	15	—
Oil Deflector Mounting Bolt	12	9	—
Oil Pump Housing Retaining Bolts	27	20	—
Oil Reservoir Mounting Bolts and Nuts	27	20	—
Oil Filter to Header Adapter	1 1/4-2 Turns After Initial Seal Contact		
Oil Level Gauge Tube Adapter Nut	33	24	—
Oil Pan Drain Plug	37	27	—
Oil Pump Screen Cover and Tube Flange Screws	24	18	—
Oil Rail Drain Plug	6	—	53
Oil Rail End Plug[a]	81	60	—
Piston Cooling Tube Bolt	11	8	—
Power Steering Pump Lines	30-40	22-30	—
Power Steering Pump Mounting Bracket to Engine	40-55	30-40	—
Power Steering Pump to Mounting Bracket	40-55	30-40	—
Radiator Retaining Bolts	24-34	18-25	—
Rocker Arm Post Attaching Bolts	27	20	—
Secondary Flywheel to Primary Flywheel	64	47	—
Transmission to Engine Bolts	53-72	39-53	—
Turbocharger Exhaust Inlet Pipe-to-Exhaust Manifold Bolts	28	21	—
Turbocharger Exhaust Inlet Pipe-to-Turbocharger Exhaust Inlet Adapter Bolts	28	21	—
Vacuum Pump to Bracket	23-31	17-22	—
Valve Cover Bolt	11	8	—

(Continued)

TORQUE SPECIFICATIONS (Cont'd)

Description	N·m	Lb-Ft	Lb-In
Water Pump Outlet Mounting Bolt	20	15	—
Water Pump Mounting Bolts	20	15	—
Water Pump Pulley	16-24	12-18	—

a Apply Threadlock® and Sealer EOAZ-19554-AA or equivalent meeting Ford specification WSK-M2G351-A6 (Type II) to all threads prior to assembly.
b Tighten four main bearing cap bolts to 102 N·m (75 lb-ft) before final torque is applied.
c See Standard Torque charts.

LUBRICANT/ADHESIVE/CLEANER SPECIFICATIONS

Description	Part Number	Ford Specification
Multi-Purpose Grease	DOAZ-19584-AA	ESB-M1C93-A
Rust Penetrant and Inhibitor	F2AZ-19A501-A	ESR-M99C56-A
Silicone Rubber	F4AZ-19562-B	WSE-M4G323-A1 and ESE-M4G195-A
Perfect Seal Sealing Compound	F2AZ-19554-AA	ESR-M18P2-A and ESE-M4G115-A
Stud and Bearing Mount	EOAZ-19554-BA	WSK-M2G349-A1

SPECIAL SERVICE TOOLS/EQUIPMENT

SPECIAL SERVICE TOOLS REQUIRED

Tool Number/ Description	Illustration
T50T-100-A Impact Slide Hammer	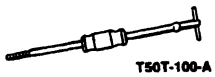 T50T-100-A
T59L-100-B Impact Slide Hammer	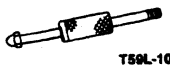 T59L-100-B
T65L-6250-A Camshaft Bearing Set	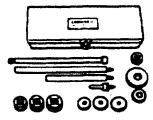 T65L-6250-A
T68P-6135-A Piston Pin Remover/Replacer	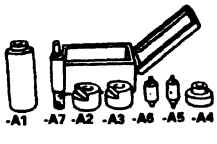 -A1 -A7 -A2 -A3 -A6 -A5 -A4 T68P-6135-A

(Continued)

SPECIAL SERVICE TOOLS/EQUIPMENT (Continued)

SPECIAL SERVICE TOOLS REQUIRED (Cont'd)

Tool Number/ Description	Illustration
T74P-6375-A Flywheel Holding Tool	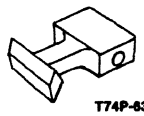
T77F-7025-C Bearing Collet Sleeve	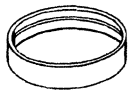
T77J-7025-B Remover Tube	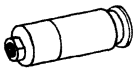
T79T-6316-A Damper Remover/Replacer Tool	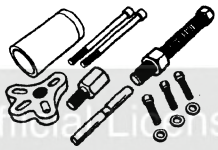
T80T-4000-W Driver Handle	
T83T-6312-B Fan Clutch Nut Wrench	
T84T-7025-B Forcing Screw	
T86P-70001-AH Lube Tube Remover	
T94T-6002-AH Keystone Piston Ring Gauge Set	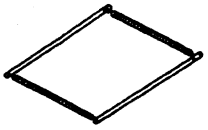
T94T-6312-AH Fan Clutch Pulley Holder	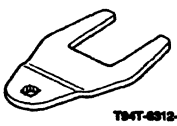

(Continued)

SPECIAL SERVICE TOOLS REQUIRED (Cont'd)

Tool Number/ Description	Illustration
T94T-6379-AH Damper Service Set	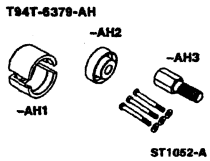
T94T-6379-AH1 Damper Wear Ring Remover	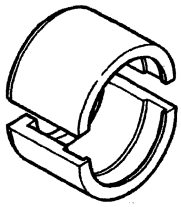
T94T-6379-AH2 Damper Wear Ring Replacer	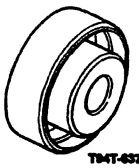
T94T-6379-AH3 Damper Remover/Replacer Adapter Set	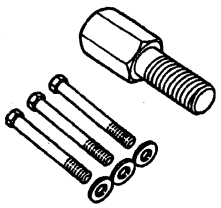
T94T-6513-AH Valve Spring Compressor	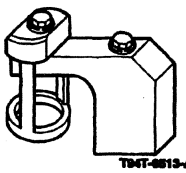
T94T-6700-AH Front Crank Seal Replacer	

(Continued)

Official Licensed Product
Ford Motor Company

SPECIAL SERVICE TOOLS/EQUIPMENT (Continued)

SPECIAL SERVICE TOOLS REQUIRED (Cont'd)

Tool Number/ Description	Illustration
T94T-6701-AH Rear Crank Service Set	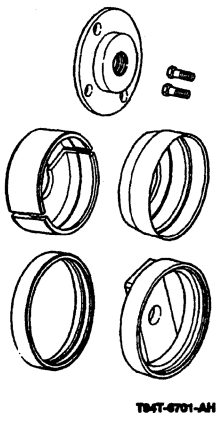
T94T-6701-AH1 Crankshaft Rear Wear Ring Remover	
T94T-6701-AH2 Crankshaft Rear Wear Ring Remover Sleeve	
T94T-6701-AH3 Crankshaft Seal Replacer	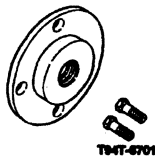

(Continued)

SPECIAL SERVICE TOOLS REQUIRED (Cont'd)

Tool Number/ Description	Illustration
T94T-6701-AH4 Crankshaft Seal Replacer	
T94T-9395-AH Fuel/Oil/Turbo Protector Cap Set	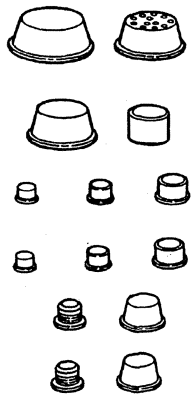

SPECIAL SERVICE TOOLS DESIRED

Tool Number	Description
D78P-4201-F	Dial Indicator Bracketry
D78P-4201-G	Dial Indicator
D80L-630-A	Step Plate Adapter
D81L-6002-B	Plastigage®
D81L-6002-C	Piston Ring Compressor
D83T-6015-B	Expansion Plug Replacer
D94T-6000C	Engine Lifting Brackets
TOOL-6505-F	Valve Stem Clearance Tool
TOOL-6513-DD	Valve/Clutch Spring Tester

ROTUNDA EQUIPMENT

Model	Description
014-00944	Oil Cooler Internal Leakage Tester
014-00931	Compression Test Adapter
014-00932	Diesel Engine Bracket Set
014-00939	Engine Mounting Bracket
014-R1058	Vacuum Pump

Official Licensed Product
Ford Motor Company

SECTION 03-03 Engine Cooling

SUBJECT	PAGE
VEHICLE APPLICATION	03-03-1
DESCRIPTION AND OPERATION	
Coolant	03-03-3
Approved Coolant and Concentration	03-03-3
Coolant Disposal	03-03-4
Unsatisfactory Coolant Materials and Supplementary Coolant Additives	03-03-3
Coolant Recovery System	03-03-4
Cooling Fan and Fan Clutch	03-03-4
Cooling System	03-03-1
Electrical System	03-03-4
Engine Block Heater	03-03-5
Engine Oil Cooler	03-03-5
Oil Cooler	03-03-2
Radiator	03-03-4
Aluminum Core, Crossflow	03-03-4
Aluminum Core, Downflow	03-03-4
Thermostat, Water	03-03-4
DIAGNOSIS AND TESTING	
Engine Cooling System	03-03-5
Component Tests	03-03-10
Fan Clutch Test	03-03-12
Pressure Test	03-03-10
Radiator Cap Pressure Test	03-03-10
Radiator Leak Test, Removed from Vehicle	03-03-11
Thermostat, Water	03-03-11
Inspection and Verification	03-03-5
Pinpoint Tests	03-03-6
Symptom Chart	03-03-6
REMOVAL AND INSTALLATION	
Block Heater	03-03-31
Block Heater Wiring	03-03-28
Constant Tension Hose Clamp	03-03-14
Cooling Fan Blade and Fan Clutch, Mechanical	03-03-25
5.8L and 7.5L Engines	03-03-25
7.3L Diesel	03-03-26
Engine Coolant Temperature (ECT) Sensor	03-03-28
Radiator — Diesel Engine	03-03-18
Aluminum Core Downflow	03-03-22
Radiator — Gas Engine	03-03-17

SUBJECT	PAGE
REMOVAL AND INSTALLATION (Cont'd.)	
Radiator Coolant Recovery Reservoir	03-03-23
7.3L Diesel Engine	03-03-24
All Except 7.3L Diesel Engine	03-03-23
Radiator Draincock	03-03-27
7.3L Diesel	03-03-28
Installation	03-03-27
Removal	03-03-27
Water Temperature Indicator Sender Unit Gasoline Engines	03-03-27
Radiator Hoses, Upper and Lower	03-03-14
Thermostat, Water	03-03-12
Diesel	03-03-13
V-8, Gasoline	03-03-12
Water Bypass Hose	03-03-15
5.8L	03-03-15
7.5L	03-03-16
Water Inlet Tube, 7.3L Diesel Only	03-03-17
Water Pump	03-03-14
SERVICE PROCEDURES	
Transmission Oil Cooler Connection Leaks, Aluminum Radiator	03-03-31
CLEANING AND INSPECTION	
Coolant Condition Check	03-03-31
Coolant in Oil	03-03-35
Cooling System Hoses and Clamps	03-03-33
Cooling System, Cleaning	03-03-34
Cooling System Flush Procedure	03-03-34
Radiator Installed	03-03-34
Heater Core Back-Flushing	03-03-34
Cooling System, Draining, Filling and Bleeding	03-03-33
Fan Blade	03-03-35
Fuel in Coolant Leak	03-03-37
Pressure Relief Cap	03-03-34
Radiator	03-03-35
Internal	03-03-35
Radiator Coolant Level Check	03-03-31
SPECIFICATIONS	
Coolant Mixture	03-03-38
Cooling System Part Numbers/Application Chart	03-03-38
SPECIAL SERVICE TOOLS/EQUIPMENT	03-03-39

VEHICLE APPLICATION

F-250, F-350 and F-Super Duty

DESCRIPTION AND OPERATION

Cooling System

This section covers cooling system diagnosis and service, cooling system component removal, disassembly, assembly, installation, service procedures and specifications.

DESCRIPTION AND OPERATION (Continued)

WARNING: DO NOT STAND IN LINE WITH OR NEAR RADIATOR FAN BLADE (8600) WHEN ENGINE (6007) IS RUNNING.

WARNING: NEVER REMOVE THE PRESSURE RELIEF CAP UNDER ANY CONDITIONS WHILE THE ENGINE IS OPERATING OR WHEN THE COOLING SYSTEM IS HOT. FAILURE TO FOLLOW THESE INSTRUCTIONS CAN RESULT IN DAMAGE TO THE COOLING SYSTEM OR ENGINE OR PERSONAL INJURY. TO AVOID HAVING SCALDING HOT COOLANT OR STEAM BLOW OUT OF THE RADIATOR (8005), USE EXTREME CARE WHEN REMOVING THE PRESSURE RELIEF CAP FROM A HOT RADIATOR. WAIT UNTIL THE ENGINE HAS COOLED, THEN WRAP A THICK CLOTH AROUND THE PRESSURE RELIEF CAP AND TURN IT SLOWLY TO THE FIRST STOP. STEP BACK WHILE THE PRESSURE IS RELEASED FROM THE COOLING SYSTEM. WHEN YOU ARE SURE ALL THE PRESSURE HAS BEEN RELEASED, PRESS DOWN ON THE PRESSURE RELIEF CAP (STILL WITH A CLOTH), TURN AND REMOVE IT.

The cooling system consists of the following components:

- Coolant, which consists of ethylene glycol antifreeze and water. It carries excess heat from engine to radiator where the excess heat is transferred to the surrounding air.
- Radiator, which allows excess engine heat to be transferred to the air.
- Radiator hoses, which attach radiator to engine.
- Water pump (8501), which circulates coolant through system.
- Passageways cast into the cylinder blocks (6010) and cylinder heads (6049), which allow coolant to circulate and absorb excess heat so that engine parts are not damaged by excess heat.
- Water thermostat (8575), which controls coolant temperature, allowing quicker engine warm-up improving fuel economy and reducing pollution.
- Bypass hose or passageway, which allows coolant to circulate within the engine when the water thermostat is closed preventing hot spots.
- Coolant recovery reservoir, which holds surplus coolant. When the system is hot and coolant expands, coolant goes into coolant recovery reservoir. When the vehicle cools, the system draws coolant back into the radiator, eliminating the need for frequent topping-off of the cooling system. The coolant recovery reservoir eliminates the loss of coolant through an overflow tube.
- Degas bottle, which removes air and combustion gasses from the coolant. This maintains efficient heat transfer capability in the coolant.
- Pressure-vacuum pressure relief cap, which allows coolant to escape to coolant recovery reservoir when it expands so system pressure does not build, possibly bursting a hose or radiator tube. The pressure relief cap allows coolant to be drawn back in from coolant recovery reservoir when system cools, refilling system and preventing hoses from collapsing from a partial vacuum in system. The pressure-vacuum pressure relief cap also maintains 90 kPa (13 psi) pressure in the cooling system. Pressurizing the cooling system raises the boiling temperature of the coolant allowing more efficient higher engine temperatures and reducing the risk of boiling over when driving at high altitudes.
- Engine cooling fan, which draws air through the radiator to help cooling at low speeds or when the vehicle is not moving. The system is designed so that air forced through the radiator by the forward motion of the vehicle is sufficient at driving speeds.
- Fan clutch (8A616), which decreases engine power needed to drive fan by allowing fan to free-wheel when engine is cold or when vehicle motion forces air through the radiator. The fan clutch has a thermostatic control so that it drives the fan when the engine is hot and air flow from the vehicle's motion is insufficient.
- Drive belt (8620), which drives the water pump, fan and other accessories off of engine crankshaft (6303). Refer to Section 03-05 for more information on drive belt.
- Engine transmission fluid cooler (7A095). On vehicles with automatic transmissions, a provision is made for cooling the transmission oil by circulating it through a cooler in the radiator.

Oil Cooler

On some engines engine oil is cooled using an oil cooler.

The oil cooler is mounted either to the cylinder block or under the oil filter adapter.

Engine oil enters the cooler. The cooler, being made up of multiple tubes submersed in engine coolant, allows the oil to disperse heat into the coolant. The coolant then flows to the radiator where it is then cooled.

- Heater water hose (18472) and heater core (18476). The heater or climate control system uses engine heat to heat the passenger compartment of the vehicle. On vehicles with standard heaters, coolant circulates through the heater core whenever the engine is running. Heater output is controlled by air door function. On vehicles with air conditioning systems, a valve controlled by the A/C system may control coolant flow to the heater core. Refer to Group 12 in the Body, Chassis Manual for further information.

Licensed Product Ford Motor Company

DESCRIPTION AND OPERATION (Continued)

Coolant flows from the radiator through the lower radiator hose to the engine-driven water pump. This pump forces the coolant through the engine oil cooler (if so equipped), engine block and cylinder head passageways. If the thermostat is closed, coolant returns to the water pump through the bypass hose or a bypass passageway in the engine. If the thermostat is open, the coolant passes back into the radiator where air passing over the radiator tubes removes the excess heat.

Engine Coolant Flow, 7.3L Diesel

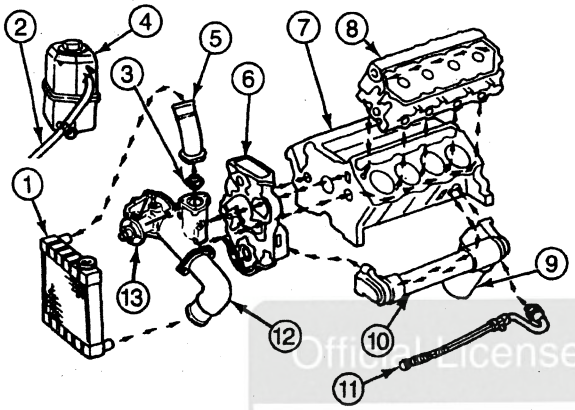

DQ0079-A

Item	Part Number	Description
1	8005	Radiator
2	8075	Radiator Overflow Hose
3	8575	Water Thermostat
4	8A080	Radiator Coolant Recovery Reservoir
5	8592	Water Hose Connection
6	6019	Engine Front Cover
7	6010	Cylinder Blocks
8	6049	Cylinder Head
9	6731	Oil Filter
10	6A642	Oil Cooler
11	6A051	Block Heater
12	—	Inlet Extension (Part of 8501)
13	8501	Water Pump

Coolant

Approved Coolant and Concentration

The approved coolant for Ford vehicles is a 50/50 mixture of water and Ford Premium Cooling System Fluid E2FZ-19549-AA or -B or equivalent meeting Ford specification ESE-M97B44-A, plus 1.5 quarts of Heavy-Duty Cooling System Additive FW-15 or equivalent meeting Ford specification ESN-M99B169-A.

This coolant mixture:

- Provides antifreeze protection down to -28.8 to -37.2 degrees Celsius (-20 to -35 degrees Fahrenheit).
- Provides protection against boil over to a system temperature of 120 degrees Celsius (250 degrees Fahrenheit). Too high a concentration of antifreeze, while allowable in extremely cold climates, can cause overheating in hot weather as antifreeze cannot absorb and reject heat as well as water.
- Provides corrosion protection, as coolant meeting Ford specifications ESE-M97B44-A and ESE-M97B43 contains additives to fight scale and corrosion.
- Provides proper water pump lubrication. Too low a concentration of antifreeze can cause water pump failure.

The acceptable concentration ranges for all climates are: (minimum) 45 percent antifreeze to 55 percent water and (maximum) 60 percent antifreeze to 40 percent water.

Use only a hand-held refractometer, Rotunda Battery / Antifreeze Tester 014-R1060 or equivalent to verify coolant concentration.

Ordinary tap water may be used for a brief time in an emergency unless the water is known to be exceptionally hard or high in alkali content. As soon as possible, the system should be drained and flushed and the proper mixture of water and Ford Premium Cooling System Fluid E2FZ-19549-AA or -B or equivalent meeting specification ESE-M97B44-A, plus 1.5 quarts of Heavy-Duty Cooling System Additive FW-15 or equivalent meeting Ford specification ESN-M99B169-A.

CAUTION: Failure to use Heavy-Duty Cooling System Additive FW-15 or an equivalent meeting Ford specification ESN-M99B169-A can result in premature engine breakdown.

Unsatisfactory Coolant Materials and Supplementary Coolant Additives

The following are NOT authorized for use in Ford vehicles:

- Alcohol-type antifreeze. Alcohol-type antifreeze does not provide adequate water pump lubrication and, having a lower boiling point than water, boils off reducing antifreeze protection.
- Alkali or calcium chloride solutions or water containing a high alkali content. These solutions will cause serious engine and cooling system damage, especially in systems containing aluminum radiators, cylinder heads or other components.
- Propylene glycol-type coolant. Propylene glycol-type coolants provide less heat transfer and some may not provide enough corrosion protection.
- Ford does authorize recycled coolant for gasoline engines only if it has been recycled using Rotunda Coolant Recycler 181-00003 or equivalent.

Official Licensed Product Ford Motor Company

DESCRIPTION AND OPERATION (Continued)

Coolant Disposal

When disposing of used coolant, always do so in accordance with all applicable federal, state, and local laws and regulations. Note that antifreeze is toxic to humans and animals.

Electrical System

Except for the coolant temperature gauge and water temperature indicator sender unit (10884), and the engine coolant temperature sensor (ECT sensor)(12A648), there are no electrical components in the cooling system. Refer to Group 13 in the Body, Chassis Manual for information on the temperature gauge.

Coolant Recovery System

NOTE: Walter C. Avrea, the owner of patents 3,601, 181 and RE27, 965, has granted Ford Motor Company rights with respect to cooling systems covered by these patents.

The coolant recovery system consists of the:

- Radiator coolant recovery reservoir (8A080)
- Radiator overflow hose (8075)
- Pressure-vacuum pressure relief cap

For descriptions, refer to Cooling System in the Description and Operation portion of this section.

The advantages of a coolant recovery system are:

- No loss of coolant when engine is hot.
- Reduced pollution due to coolant not being released from the vehicle.
- Reduced air trapped in the coolant resulting in less overheating from coolant foaming, longer water pump seal life, reduced possibility of water pump impeller damage from bubbles in coolant, longer hose life, and less cooling system corrosion.

Radiator

NOTE: For aluminum core (downflow-type or crossflow-type) radiator assemblies, the tanks and / or transmission oil cooler must not be removed from the radiator for service or repair. Replace the complete radiator assembly instead of plastic tank removal from the radiator.

Aluminum Core, Downflow

Vehicles equipped with the 7.3L diesel engine use a downflow-type radiator (8005). This radiator is designed so that coolant flows down from a top coolant tank, through the cooling tubes and into the bottom cooling tank.

The radiator core is the aluminum tube- and fin-type. Tubes are controlled atmosphere brazed (CAB) to the headers.

The tanks are fiberglass-reinforced nylon and are not removable for radiator service. The tanks are designed to provide for even distribution of the coolant among the radiator tubes.

On vehicles with automatic transmissions, the radiator outlet tank (8054) also contains a transmission oil cooler.

Aluminum Core, Crossflow

Vehicles with the 5.8L and 7.5L engines use a crossflow-type radiator. In this type radiator, coolant flows horizontally from a radiator inlet tank (8079) to a radiator outlet tank. On vehicles with automatic transmissions, the radiator outlet tank also includes a transmission oil cooler.

The core is aluminum tube- and fin-type, controlled atmosphere brazed (CAB) to the headers. The tanks are fiberglass-reinforced nylon, and are designed to allow for even distribution of coolant among the tubes.

Typical Crossflow (Horizontal) Radiator

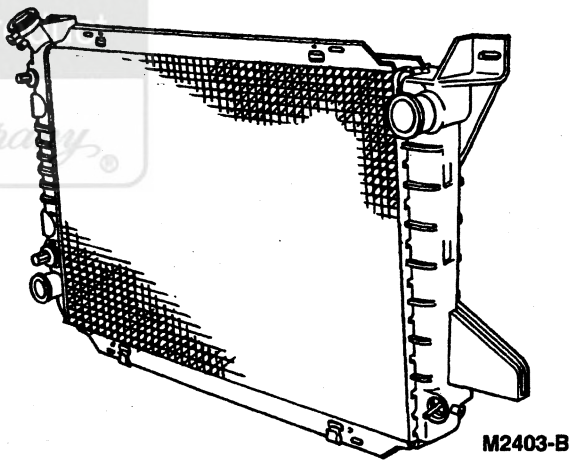

M2403-B

Cooling Fan and Fan Clutch

Engine cooling fans are of pressed-steel construction with the fan blades riveted to the fan center.

The fan is driven through a viscous-type fan clutch (8A616) which is controlled by an integral bimetal thermostat.

Thermostat, Water

A poppet-type water thermostat (8575) is used with all engines (6007).

Official Licensed Product Ford Motor Company

DESCRIPTION AND OPERATION (Continued)

When the water thermostat is closed, coolant flows to the water pump (8501) through a bypass passage at the front of the engine. When the water thermostat is open, coolant flows through the coolant outlet elbow (thermostat housing) to the radiator (8005).

The water thermostat used in production is a high-temperature water thermostat for use with a mixture of water and permanent-type antifreeze. A low-temperature water thermostat should be installed if a non-permanent type antifreeze and water coolant solution is used.

Engine Oil Cooler

An oil cooler (6A642) is used on the 7.5L gasoline engine, and 7.3L diesel engine.

On the 5.8L engine and 7.5L engine, the oil cooler is part of the oil filter adapter. The lower radiator hose (8286) attaches to the inlet side of the oil cooler and the oil cooler outlet hose connects to the inlet side of the water pump (8501). Oil going to the full-flow oil filter (6731) passes through the oil cooler as well.

The oil cooler used on the 7.3L diesel engine is attached to the side of the cylinder blocks (6010). Coolant flows through a set of tubes attached to bulkheads. As oil flows around these tubes, excess heat is transferred to the coolant.

Engine Block Heater

A block heater (6A051) is standard on the 7.3L diesel and optional on other engines. When so equipped, the 7.5L engine has dual block heaters — one on each side.

The block heater consists of an electrical heating element installed in one of the core plug openings in the engine block and an electrical cable which plugs into a standard 110-volt AC electrical outlet. It is designed to keep the engine coolant warm during cold weather as an aid in cold starting.

DIAGNOSIS AND TESTING

Engine Cooling System

Inspection and Verification

1. Verify the vehicle owner's original concern by operating the engine cooling system to duplicate the concern.
2. Inspect to determine if one of the following mechanical concerns applies.

VISUAL INSPECTION CHART

Mechanical
• Damaged hoses
• Loose / damaged hose clamps
• Damaged water thermostat
• Damaged head gaskets
• Damaged intake manifold gasket
• Damaged water pump
• Damaged radiator
• Damaged radiator coolant recovery reservoir
• Damaged heater core

3. If the concern(s) remains after the inspection, determine the symptom(s) and proceed to the following symptom chart.

Ford Motor Company

DIAGNOSIS AND TESTING (Continued)

Symptom Chart

ENGINE COOLING

Condition	Possible Source	Action
• Loss of Coolant	• Damaged radiator. • Damaged water pump. • Loose / damaged radiator hoses. • Loose / damaged heater water hoses. • Damaged heater core. • Damaged engine gaskets. • Damaged radiator coolant recovery reservoir. • Internal engine coolant leak.	• GO to Pinpoint Test A.
• Engine Overheats	• Damaged water thermostat. • Damaged water pump. • Cooling fan inoperative. • Plugged radiator.	• GO to Pinpoint Test B.
• Engine Does Not Reach Normal Operating Temperature	• Damaged water thermostat. • Cooling fan.	• GO to Pinpoint Test C.
• Engine Block Heater Does Not Operate Properly	• Block heater wiring. • Block heater. • 110-volt A / C power source inoperative.	• GO to Pinpoint Test D.

Pinpoint Tests

Official Licensed Product Ford Motor Company

PINPOINT TEST A : LOSS OF COOLANT

Test Step		Result	Action to Take
A1	CHECK COOLANT LEVEL		
	NOTE: If engine is hot, allow engine to cool down before proceeding. • Check coolant level at radiator coolant recovery reservoir. • **Is coolant level OK?**	Yes ▶ No ▶	GO to **A2**. REFILL as outlined. GO to **A2**.
A2	CHECK FOR VISIBLE LEAKAGE		
	• Engine coolant has an added dye color, that makes the coolant an excellent leak detector. • Check entire cooling system for visible leakage. • **Is there visible leakage?**	Yes ▶ No ▶	SERVICE as required. RETEST system. GO **A3**.
A3	PRESSURE TEST COOLING SYSTEM		
	• Using Rotunda Radiator Pressure Tester 014-R1072 or equivalent, pressurize cooling system as outlined in Pressure Test under Component Tests in this section. NOTE: Check inside vehicle for possible heater core leakage. • **Is there leakage?**	Yes ▶ No ▶	SERVICE as required. GO to **A4**.
A4	CHECK PRESSURE RELIEF CAP		
	• Using Rotunda Radiator Pressure Tester 014-R1072 or equivalent, test pressure relief radiator cap. Refer to Radiator Cap Pressure Test in Component Tests in this section. • **Did radiator cap test OK?**	Yes ▶ No ▶	GO to **A5**. REPLACE damaged pressure relief cap. RETEST system.
A5	CHECK RADIATOR OVERFLOW HOSE		
	• Remove radiator overflow hose. • Inspect radiator overflow hose for obstruction, cracks or cuts. • **Is radiator overflow hose condition OK?**	Yes ▶ No ▶	GO to **A6**. SERVICE hose as required.

DIAGNOSIS AND TESTING (Continued)

PINPOINT TEST A : LOSS OF COOLANT (Continued)

Test Step		Result	Action to Take
A6	CHECK RESERVOIR		
	• Replenish coolant to Cold level. • Inspect radiator coolant recovery reservoir for leaks. • **Is there leakage at radiator coolant recovery reservoir?**	Yes ▶	REPLACE coolant recovery reservoir. RESTORE vehicle.
		No ▶	GO to **A7**.
A7	CHECK COOLANT FOR INTERNAL LEAKAGE		
	• Visually inspect coolant in radiator coolant recovery reservoir for signs of transmission or engine oil. • **Is oil evident in coolant?**	Yes ▶	If engine oil is evident on vehicles with an engine oil cooler, REMOVE engine oil cooler and INSPECT for damage. REPLACE if damaged.
		▶	If engine oil is evident on vehicles without engine oil cooler or if oil cooler checks out OK, REMOVE cylinder head as outlined in Section 03-01A, Section 03-01B or Section 03-01C, depending on engine, and INSPECT for leaking head gasket and head or block cracks.
		▶	If transmission oil is evident, replace radiator as outlined in this section and check condition of transmission oil as outlined in this section.
		No ▶	GO to **A8**.
A8	CHECK ENGINE AND TRANSMISSION FOR COOLANT		
	• Remove oil level indicator for engine and transmission. • Carefully inspect oil level indicator for evidence of coolant. • **Is coolant evident?**	Yes ▶	If coolant is in engine oil on vehicles with an engine oil cooler, REMOVE engine oil cooler and INSPECT for damage. REPLACE if damaged.
		▶	If coolant is evident in engine oil on vehicles without oil cooler or if oil cooler checks out OK, REMOVE cylinder head as outlined in Section 03-01A, Section 03-01B or Section 03-01C depending on engine, and INSPECT for leaking head gasket and head or block cracks.
		▶	If coolant is evident in transmission oil, REFER to transmission oil coolant check in Section 07-01.
		No ▶	Cooling system is OK.

PINPOINT TEST B: ENGINE OVERHEATS

Test Step		Result	Action to Take
B1	CHECK COOLANT LEVEL		
	NOTE: If engine is hot, allow engine to cool down before proceeding. • Remove pressure relief cap and check coolant level at radiator coolant recovery reservoir. • **Is coolant level OK?**	Yes ▶	GO to **B2**.
		No ▶	REFILL as outlined. REFER to Cooling System, Draining, Filling and Bleeding in the Cleaning and Inspection portion of this section. GO to Pinpoint Test A.
B2	CHECK COOLANT CONDITION		
	• Check coolant for contaminants such as rust or corrosion. Also, check for color discoloration. • **Is coolant condition OK?**	Yes ▶	GO to **B3**.
		No ▶	FLUSH system. REFER to Cooling System Flush Procedure in the Cleaning and Inspection portion of this section. RETEST system.

Official Licensed Product Ford Motor Company

DIAGNOSIS AND TESTING (Continued)

PINPOINT TEST B: ENGINE OVERHEATS (Continued)

Test Step		Result ▶	Action to Take
B3	CHECK FOR AIRFLOW OBSTRUCTION		
	• Visually inspect A/C condenser core and radiator for obstructions, such as leaves or bugs. • **Is there any obstruction?**	Yes ▶	REMOVE obstruction and CLEAN A/C condenser core and radiator. RETEST system.
		No ▶	GO to **B4**.
B4	CHECK WATER THERMOSTAT OPERATION		
	• Allow engine to run for 10 minutes. • Feel the inlet and outlet heater water hose and the underside of the upper radiator hose. • **Are the upper radiator hose and heater water hoses cold?**	Yes ▶	REPLACE water thermostat. REFER to Thermostat, Water in the Removal and Installation portion of this section. RETEST system.
		No ▶	Leave engine running. GO to **B5**.
B5	CHECK COOLING FAN		
	• Check for proper cooling fan clutch operation. Perform Fan Clutch Test. Refer to Component Tests in this section. • **Did cooling fan clutch operate OK?**	Yes ▶	CHECK the following: • Rust or scale in radiator • Water pump shaft and impeller • Collapsed lower hose
		No ▶	REPLACE fan clutch. REFER to Cooling Fan Blade and Fan Clutch in the Removal and Installation portion of this section. RETEST system.

PINPOINT TEST C: ENGINE DOES NOT REACH NORMAL OPERATING TEMPERATURE

Test Step		Result ▶	Action to Take
C1	CHECK FOR FROZEN FAN CLUTCH		
	• Perform fan clutch test as outlined in Component Tests. • **Did fan clutch pass test?**	Yes ▶	GO to **C2**.
		No ▶	REPLACE fan clutch. REFER to Cooling Fan Blade and Fan Clutch in the Removal and Installation portion of this section.
C2	CHECK THERMOSTAT OPERATION		
	• Remove water thermostat and check opening temperature as outlined in this section. • **Does water thermostat begin to open and become fully open at temperatures in the specifications at the end of this section?**	Yes ▶	REINSTALL water thermostat and CHECK temperature gauge operation as outlined in Section 13-01.
		No ▶	REPLACE thermostat.

PINPOINT TEST D: ENGINE BLOCK HEATER DOES NOT OPERATE PROPERLY

Test Step		Result ▶	Action to Take
D1	CHECK PLUG AND WIRE		
	• Check for corroded or broken spades on plug. • Check for broken, cracked, or cut wires. • Verify 110-volt AC power source operational. • **Are plug and wires OK?**	Yes ▶	GO to **D2**.
		No ▶	MAKE necessary repairs. GO to **D2**.

DIAGNOSIS AND TESTING (Continued)

PINPOINT TEST D: ENGINE BLOCK HEATER DOES NOT OPERATE PROPERLY (Continued)

Test Step		Result	Action to Take
D2	CHECK CONTINUITY OF PLUG AND WIRES		
	• Disconnect plugs and block heater. Check continuity of wires from plug to element connectors.	Yes ▶	GO to **D3**.
		No ▶	REPAIR or REPLACE plugs and wires as necessary. GO to **D4**.
	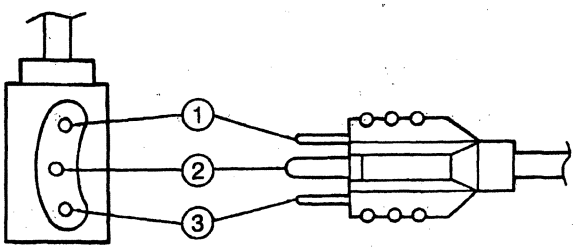 POWER CABLE CONNECTORS L10258-A		
	• **Are plug and wires OK?**		
D3	CHECK RESISTANCE OF BLOCK HEATER		
	• Use Rotunda 73 Digital Multimeter 105-R0051 or equivalent and check for continuity across block heater pins with wires still disconnected. • **Is there continuity?**	Yes ▶	GO to **D4**.
		No ▶	REPLACE engine block heater. GO to **D4**.
D4	CHECK OPERATION		
	• Reconnect block heater. • Key to run. Make sure engine is cold (ambient temperature). Key off. • Plug in block heater to known good 120V A/C source and wait 10 minutes. • Key to run. Coolant should be up to 5 to 10°C (40-50°F), bottom of Normal range on gauge. • **Has system performed as specified?**	Yes ▶	System is functional. TERMINATE test.
		No ▶	GO to **D5**.
D5	CHECK WARMING		
	• Check if block heater is warm. • **Is block heater warm?**	Yes ▶	CHECK operation of vehicle engine coolant temperature gauge. REFER to Section 13-01 in the Body, Chassis Manual.
		No ▶	GO to **D1**.

Official Licensed Product Chrysler Company

DIAGNOSIS AND TESTING (Continued)

Component Tests

Pressure Test

1. **WARNING: NEVER REMOVE THE PRESSURE RELIEF CAP OR DEGAS BOTTLE CAP UNDER ANY CONDITIONS WHILE THE ENGINE IS OPERATING. FAILURE TO FOLLOW THESE INSTRUCTIONS CAN RESULT IN DAMAGE TO THE COOLING SYSTEM OR ENGINE OR PERSONAL INJURY. TO AVOID HAVING SCALDING HOT COOLANT OR STEAM BLOW OUT OF THE RADIATOR, USE EXTREME CARE WHEN REMOVING THE PRESSURE RELIEF CAP OR DEGAS BOTTLE CAP FROM A HOT RADIATOR. WAIT UNTIL THE ENGINE HAS COOLED, THEN WRAP A THICK CLOTH AROUND THE PRESSURE RELIEF CAP OR DEGAS BOTTLE CAP AND TURN IT SLOWLY TO THE FIRST STOP. STEP BACK WHILE THE PRESSURE IS RELEASED FROM THE COOLING SYSTEM. WHEN YOU ARE SURE ALL THE PRESSURE HAS BEEN RELEASED, PRESS DOWN ON THE PRESSURE RELIEF CAP OR DEGAS BOTTLE CAP (STILL WITH A CLOTH), TURN AND REMOVE IT.**

   Shut the engine off.
2. Open hood and install protective fender covers.
3. When engine is cool, cautiously remove pressure relief cap or degas bottle cap.
4. Disconnect battery.
5. Adjust the radiator coolant level (fill or drain) to 25 mm (one inch) below the filler neck opening before testing. Wipe clean, and then wet the rubber sealing surfaces in the cap and filler neck before installing the radiator cap tightly on the radiator.
6. Disconnect the electrical connector from the coolant temperature sending unit and remove the temperature sending unit from the engine.

   With the pressure relief cap installed and the cooling system pressure relieved, only a small amount of coolant will be lost when the sending unit is removed.
7. Using the adapter fitting from Rotunda Radiator Pressure Tester 014-R1072 or equivalent (male thread on one end, and a hose connector on the other end to accommodate the tester hose) tightly into the intake manifold (9424) or cylinder head in place of the sending unit.
8. Remove the radiator overflow hose from the overflow nipple. Install a separate radiator overflow hose firmly on the overflow nipple. Insert the free end of separate radiator overflow hose into container of water.
9. Attach the pressure pump and gauge to the adapter-fitting and pressurize the cooling system to 69 kPa (10 psi).

   No bubbles should appear in the water container when the system is pressurized to the LOWER LIMIT (69 kPa [10 psi]). If the system is satisfactory at the lower limit, gradually increase the system pressure until a slight stream of bubbles appears in the water container. This is the release pressure of the pressure cap.

   Replace any pressure relief cap or degas bottle cap that has a release pressure that is greater than the specified UPPER LIMIT pressure (90 kPa [13 psi]) without discharging bubbles.
10. If the radiator relief cap or degas bottle cap does not hold pressure, remove and wash the pressure relief cap or degas bottle cap in clean water to dislodge all foreign particles from the gaskets. Check the sealing surface in the radiator filler neck.

    Inspect the cam lock flanges on both sides of the filler neck for maximum cap engagement.
11. Pressurize the cooling system as described in Step 6 (using a pressure relief cap and degas bottle cap that operate within the specified upper and lower pressure limits) and observe the gauge reading for approximately two minutes. Pressure should be held between 69 and 90 kPa (10 and 13 psi) and should not drop during this time.
12. If the pressure drops, check for leaks at the engine-to-heater core hoses, engine-to-radiator hoses, bypass hose, water valve hose (if applicable), thermostat housing gasket, radiator and heater core. Also refer to engine system checks if a leak cannot be located in the cooling system. Any leaks that are found must be corrected and the system checked again.

    If the system holds pressure, proceed to next step.
13. Release the system pressure by loosening the pressure relief cap and removing the adapter. Install the water temperature indicator sender unit (10884), check coolant level and replenish, if necessary, with the correct coolant solution.
14. NOTE: When the battery (10655) has been disconnected and reconnected, some abnormal drive symptoms may occur while the powertrain control module (PCM)(12A650) relearns its adaptive strategy. The vehicle may need to be driven 16 km (10 miles) or more to relearn the strategy.

    Connect battery ground cable.

Radiator Cap Pressure Test

1. Remove the pressure relief cap from the radiator filler neck.

Ford Motor Company Official Licensed Product

DIAGNOSIS AND TESTING (Continued)

2. Use water to clean the pressure relief cap in the area of the rubber seal and the vacuum relief valve as described in Radiator Cap in the Cleaning and Inspection portion of this section. Immerse the pressure relief cap in water to wet the seals and install on the shallow filler neck of Rotunda Radiator / Heater Core Pressure Tester Adapter 021-00013 or equivalent. (The adapter is designed to accept both deep and shallow neck radiator caps.)
3. Before installing the pressure relief cap on the adapter, immerse the filler neck seal in water and install it in the filler neck adapter. If the adapter is made of plastic, check its sealing surfaces to be certain that they are free of rough spots and contain no parting lines or core marks.

   The filler neck seal is reversible so that it may be used on either a deep or shallow radiator filler neck. It will also fit either end of the radiator cap pressure test adapter.
4. Install the filler neck adapter with filler neck seal on the deep filler neck end to the radiator cap pressure test adapter.
5. Connect the female quick disconnect fitting of the pressure test pump to the male quick disconnect fitting of the filler neck adapter.

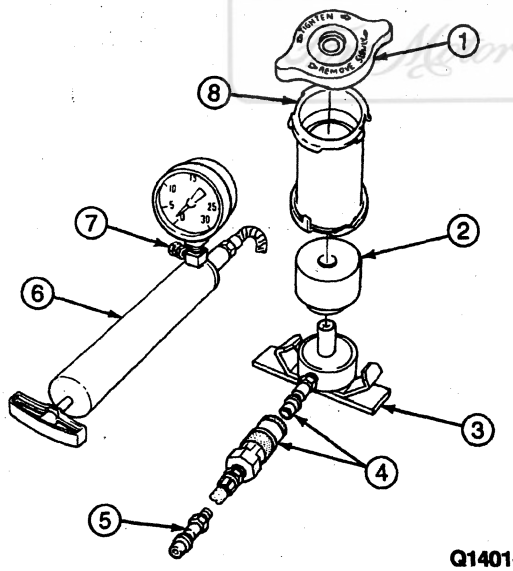

Q1401-F

Item	Part Number	Description
1	8100	Pressure Relief Cap
2	—	Filler Neck Seal (Part of 107-01301)
3	—	Filler Neck Adapter (Part of 107-01301)
4	—	Quick Disconnect Fittings (Part of 107-01301)

(Continued)

Item	Part Number	Description
5	—	Temperature Sender Pressure Hose Adapter (Part of 107-01301)
6	—	Pressure Test Pump 021-00013 or Equivalent (Part of 107-01301)
7	—	Pressure Relief Screw (Part of 107-01301)
8	—	Radiator Cap Pressure Test Adapter (Part of 107-01301)

6. SLOWLY depress the pump plunger of the pressure test pump until the pressure gauge reading stops increasing and note the highest pressure reading obtained. If the plunger of the pump is depressed too fast, an erroneous pressure reading will result.
7. Release the pressure by depressing the pressure relief valve stem. Then, tighten the pressure relief screw and repeat Step 6 (at least twice) to make sure the pressure test reading is repeatable within the acceptable gauge reading limits of the pressure relief cap and is not erratic. Refer to Specifications at end of this section.
8. If the pressure test gauge readings are not within the acceptable gauge reading limits, replace the pressure relief cap, and perform the pressure test. If the pressure test gauge readings are within the acceptable gauge reading limits, perform the pressure test.

Thermostat, Water

Perform the following inspection at approximately 22°C (72°F).

If the problem being investigated is insufficient heat, inspect the water thermostat for leakage. Hold the water thermostat up to a lighted background. Light leakage around the water thermostat valve (water thermostat at room temperature) is unacceptable and the water thermostat should be replaced. A slight leakage of light at one or two locations on the perimeter of the valve of some water thermostats may be detected. This is considered normal.

Radiator Leak Test, Removed from Vehicle

CAUTION: Do not leak test an aluminum radiator in the same water that is used to leak test copper/brass radiators. Flux and caustic cleaners may be present in the tank and they will attack aluminum.

Clean the radiator before leak testing to prevent contaminating the test tank. Leak test the radiator in clean water at 145 kPa (21 psi) air pressure.

A separate, clean test tank is recommended for aluminum radiators. If a separate tank is not available for aluminum radiator testing, thoroughly clean the test tank each time before testing an aluminum radiator.

DIAGNOSIS AND TESTING (Continued)

Fan Clutch Test

Spin the fan. A light resistance should be felt. If there is no resistance or very high resistance, the minimum and maximum fan speeds must be checked as follows:

Refer to Fan Clutch Specifications at the end of this section.

Disengaged Fan Clutch Requirement Test — Cold

1. **WARNING: TO AVOID THE POSSIBILITY OF PERSONAL INJURY OR DAMAGE TO THE VEHICLE, DO NOT OPERATE THE ENGINE UNTIL THE FAN HAS BEEN FIRST EXAMINED FOR POSSIBLE CRACKS AND SEPARATION.**

   Using a suitable marker, mark the water pump pulley (8509), one of the fan blade retaining bolts and the crankshaft pulley (6312).
2. Connect a tachometer to the engine.
3. Install a throttle adjusting tool.
4. Connect a Sun Strobe Light or equivalent. This can be an SLT-1 or SLT-2 Strobotach or an STA-1 Strobe Trigger adapter for the Sun Distributor Test Stand. A Digital Photoelectric Tachometer 055-00108 or equivalent can also be used for this test.
5. Start the engine and run it at approximately 1500 rpm until engine temperature has normalized.
6. Adjust the engine to the testing speed in the Specifications at the end of this section.
7. Operate the strobe light at water pump test speed and aim it at the water pump pulley. Adjust the engine speed until the light flashes and the water pump pulley marks are synchronized.
8. Aim the timing light at the fan retaining bolts. Adjust the strobe light until it is synchronized with the marked fan retaining bolt (fan appears to stand still).
9. The fan speed must not be greater than the specified fan test speed at water pump test speed.
10. Turn the engine OFF.
11. If the fan speed was greater than the specified fan test speed, check for proper parts usage.

    If the correct parts are used, replace the fan clutch.

    If the part(s) are not the correct ones, replace the part(s) and perform the test again.
12. If the Engaged Fan Clutch Requirement Test is going to be performed, do not remove the tachometer, strobe light or throttle adjusting tool.
13. If an Engaged Fan Clutch Requirement Test is not going to be performed, remove the tachometer, strobe light and throttle adjusting tool.

Engaged Speed Fan Clutch Requirement Test

1. **WARNING: TO AVOID THE POSSIBILITY OF PERSONAL INJURY OR DAMAGE TO THE VEHICLE, DO NOT OPERATE THE ENGINE WITH THE HOOD OPEN UNTIL THE FAN HAS BEEN FIRST EXAMINED FOR POSSIBLE CRACKS AND SEPARATION.**

   If the Disengaged Fan Clutch Requirement Test was not performed, follow Steps 1 through 5 under Disengaged Speed Fan Clutch Requirement Test.
2. Block off areas on each side of the radiator in the engine compartment and the front of the radiator grille (8200). This will raise the temperature of the air striking the fan clutch and should cause the fan blade to operate at maximum speed.
3. Place the air conditioning selector, if so equipped, in the maximum position and the blower switch in the high position.
4. Adjust the strobe light to water pump test speed.
5. Start the engine and adjust it until the water pump pulley is synchronized with the strobe light. This will be near the engine testing speed given in Specifications.
6. Synchronize the timing light with the fan to fan clutch retaining bolt.
7. The fan speed must meet or exceed the specified minimum fan blade test speed at water pump test speed.
8. If the fan speed was less than the specified fan test speed, replace the fan clutch.

REMOVAL AND INSTALLATION

Thermostat, Water

V-8, Gasoline

Removal

1. Drain the radiator (8005) so that the coolant level is below the water thermostat (8575). Refer to Cooling System Draining, Filling and Bleeding in the Cleaning and Inspection portion of this section.
2. Disconnect the bypass hose at the water pump (8501) and water hose connection.
3. Remove the bypass tube.
4. Remove the water hose connection (8592) attaching bolts.
5. Bend the upper radiator hose (8260) upward and remove the water thermostat and water hose connection gasket (8255).

REMOVAL AND INSTALLATION (Continued)

Installation

1. Clean the water outlet water hose connection gasket surfaces. Coat a new water hose connection gasket with Perfect Seal Sealing Compound B5A-19554-A or D7AZ-19554-BA or equivalent meeting Ford specification ESR-M18P2-A or ESE-M4G115-A.
2. Position the water hose connection gasket on the intake manifold or cylinder head opening.
3. Install the water thermostat in the intake manifold opening with the copper pellet or element toward the engine (6007) and the thermostat flange positioned in the recess. If the water thermostat is improperly installed, it will cause a retarded flow of coolant.
4. Position the water hose connection against the intake manifold (9424) and install attaching bolts. If a 7.5L engine, tighten bolts to 32-37 N·m (24-27 lb-ft). For all other engines, tighten bolts to 16-24 N·m (12-18 lb-ft).
5. Install the water bypass line and tighten hose connections.
6. Fill the cooling system as described in Cooling System, Draining, Filling and Bleeding in the Cleaning and Inspection portion of this section.
7. **WARNING: DO NOT STAND IN LINE WITH OR NEAR RADIATOR FAN BLADE (8600) WHEN ENGINE IS RUNNING.**

   Operate the engine until normal operating temperature is reached, then check the coolant level and check for leaks.

Thermostat Installation, 5.8L

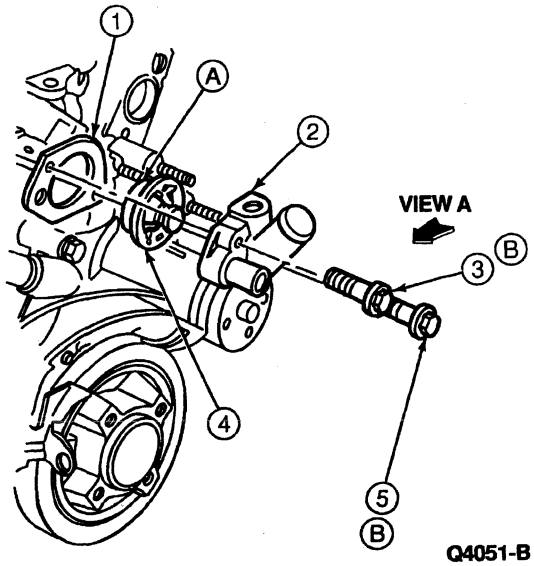

Q4051-B

Item	Part Number	Description
1	8255	Water Outlet Connection Gasket
2	8592	Water Outlet Connection
3	391428	Screw, 5/16-18 x 1.25
4	8575	Water Thermostat
5	391430	Screw 5/16-18 x 1.75
A	—	Insert with Copper Pellet Towards Engine
B	—	Tighten in Sequence Indicated in Text to 16-24 N·m (12-18 Lb-Ft)

Diesel

Removal

1. Drain the cooling system. Refer to Cooling System Draining, Filling and Bleeding in the Cleaning and Inspection portion of this section.
2. Disconnect the drive belt (8620) at the drive belt tensioner pulley (6B217).
3. Remove the upper radiator coolant hose clamp at the water hose connection and disconnect the upper radiator hose from the water hose connection.
4. Remove retaining screws and the water hose connection.

Ford Motor Company Licensed Product

REMOVAL AND INSTALLATION (Continued)

5. Remove the thermostat housing O-ring and water thermostat.

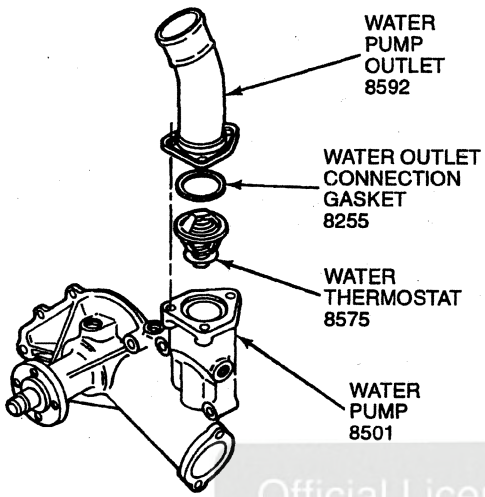

Installation

1. Install the water thermostat O-ring.
2. Position the water hose connection. Install retaining screws and tighten to 20 N·m (15 lb-ft).
3. Connect the upper radiator hose to the water hose connection and install hose clamp at the water hose connection.
4. Install the drive belt at the drive belt tensioner pulley.
5. Refill and bleed the engine cooling system as described in Cooling System, Draining, Filling and Bleeding in the Cleaning and Inspection portion of this section.

Water Pump

Refer to Section 03-01A, Section 03-01B or Section 03-01C.

Constant Tension Hose Clamp

Removal

1. Pressure test the system to determine the location of the leak. Proceed with the following steps only if it is a radiator hose joint that is leaking.
2. If the hose joint is leaking, reseat the clamp by using a pair of pliers or vise grips to squeeze the clamp tangs together (loosen the clamp), reseat the hose, then re-release the clamp. Pay close attention that the clamp is straight (perpendicular to the hose) and is not cocked over the bead.
3. Pressure test the system again. If the leak persists, check the radiator hose, clamp, and connector (see step 5) for damage. If damage is observed, replace the damaged part.

CLAMP REPLACEMENT PART NUMBERS

Diameter of Connector	Clamp Part Number
1-1/2 Inch	N808275-S101
1-3/4 Inch	N808276-S101
2 Inch	N808732-S100

4. If clamp is only to be removed, residual glue may exist on the hose. If necessary, remove the glued clamp by applying a heat gun at 216°C (420°F) to the glued portion for approximately one minute. The glue is supposed to dissipate with the thermal engine cycle, so it may not be a factor. The glue is located 180 degrees away from the tangs.
5. Inspect the connector for any scratches or foreign materials on the sealing surface. If connector is damaged, replace radiator.

Installation

1. Push the hose onto the connector until it is completely seated against the hose stop. If lubricant is to be used to assist hose installation, use premixed Merpol (ESE-M99B144-B) or water. Any other type of lubricant can cause the joint to leak.
2. Release the clamp by carefully removing the retaining clip using pliers or vise grips. During removal, the clip should be held securely at all times. Do not pry or pop the clip off the clamp.
3. Check that the clamp is straight, fully released and seated on the sealing area of the hose and connector. The clamp should NOT be cocked over or on top of the bead at the end of connector.

Radiator Hoses, Upper and Lower

Removal

1. NOTE: Radiator hoses should be checked as directed in the applicable Maintenance Schedule. Replace whenever hoses become cracked, rotted or have a tendency to collapse.

   Drain the radiator (8005). Refer to Cooling System Draining, Filling and Bleeding in the Cleaning and Inspection portion of this section.

Official Licensed Product
Ford Motor Company

REMOVAL AND INSTALLATION (Continued)

2. Slide the hose clamps (8287) onto hose at each end of the hose to be removed. Slide the hose off the radiator connection and the water outlet connection (upper radiator hose (8260)) or the water pump connection (lower radiator hose).

Installation

1. **CAUTION: Make sure the hose clamps are beyond the bead and placed in the center of the clamping surface of the connections.**

   Position the hose clamps at least 3.2 mm (1/8 inch) from each end of the hose. Coat the connection areas with an approved water-based lubricant and slide the hose on the connections. Install the constant tension clamps.
2. Fill the radiator. Refer to Cooling System Draining, Filling and Bleeding in the Cleaning and Inspection portion of this section.
3. Start the engine (6007), check the hoses and connections for leaks.

Water Bypass Hose

5.8L

Removal

1. Open hood (16612) and remove air cleaner outlet tubes (9B659).
2. Drain cooling system as outlined in Cooling System, Draining, Filling and Bleeding in the Cleaning and Inspection portion of this section.
3. Cut water bypass hose in half.
4. Compress hose clamps and slide toward center of bypass hose.
5. **WARNING: IF WATER BYPASS TUBE (8548) HAS BEEN ON VEHICLE A LENGTH OF TIME, TWIST TO BREAK LOOSE BEFORE PULLING OFF. WATER BYPASS TUBE MAY SUDDENLY BREAK FREE, CAUSING HAND TO BE INJURED BY HITTING SHARP OBJECTS.**

   Twist water bypass tube to break loose seal and remove.

Installation

1. Position hose clamps on water bypass hose.
2. Put hose onto thermostat housing water pump nipples.
3. Slide hose clamps into place and release.
4. Refill cooling system as outlined in Cooling System, Draining, Filling and Bleeding in the Cleaning and Inspection portion of this section.
5. Install air cleaner outlet tubes.
6. Start engine (6007) and check for leaks. Retighten hose clamps (8287) after engine has warmed up.

Official Licensed Product
Ford Motor Company

REMOVAL AND INSTALLATION (Continued)

Bypass Hose, 5.8L

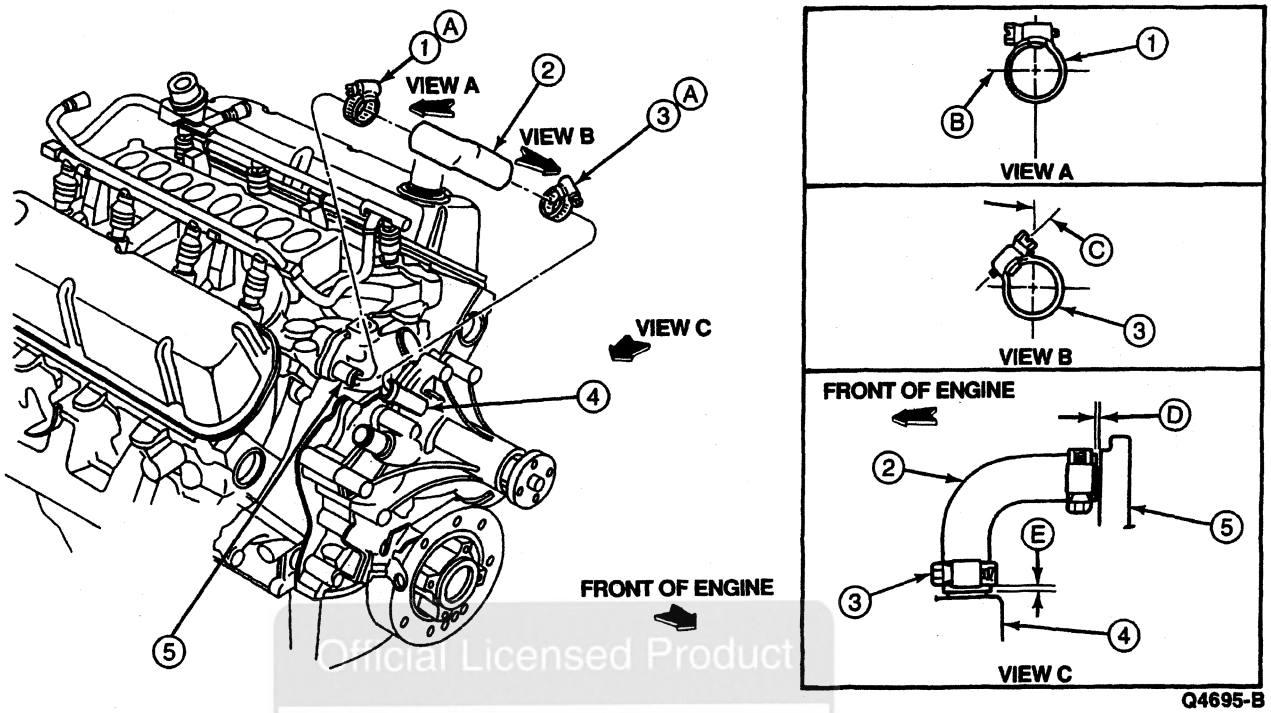

Item	Part Number	Description
1	383522-S	Clamp
2	8597	Bypass Hose
3	389772-S	Clamp
4	8501	Water Pump Assy (Upper Nipple)
5	8592	Water Hose Connection
A	—	Tighten to 1.6-2.2 N·m (15-20 Lb-In)

Item	Part Number	Description
B	—	Center Line Parallel to Intake Manifold Deck
C	—	Align 10°-30°
D	—	1.5 mm (0.06 Inch) Gap Typical
E	—	3.0 mm (0.12 Inch) Maximum

(Continued)

7.5L

Removal

1. Open hood and drain cooling system. Refer to Cooling System, Draining, Filling and Bleeding in the Cleaning and Inspection portion of this section.
2. Remove air cleaner outlet tubes.
3. Remove distributor (12127). Refer to Section 03-07A.
4. Compress hose clamps and slide toward middle of bypass hose.
5. Using sharp knife, cut old water bypass hose in two in the middle.
6. Remove the two halves of the water bypass hose. It may be necessary to pry against the intake manifold (9424) or water pump (8501) with a medium-bladed screwdriver to break loose water bypass hose from nipple.

Installation

1. Position hose clamps on bypass hose near the middle.
2. **CAUTION: Do not kink hose. This breaks cords and may cause a permanent kink which could cause a coolant restriction.**

   Bend water bypass hose and work onto nipples. Do not bend water bypass hose so tightly that it kinks.
3. Position hose clamps and release.

REMOVAL AND INSTALLATION (Continued)

4. Refill cooling system. Refer to Cooling System, Draining, Filling and Bleeding in the Cleaning and Inspection portion of this section.
5. Install and time distributor as outlined in Section 03-07A.
6. Start engine and check for leaks.
7. Install air cleaner outlet tubes.

Bypass Hose, 7.5L

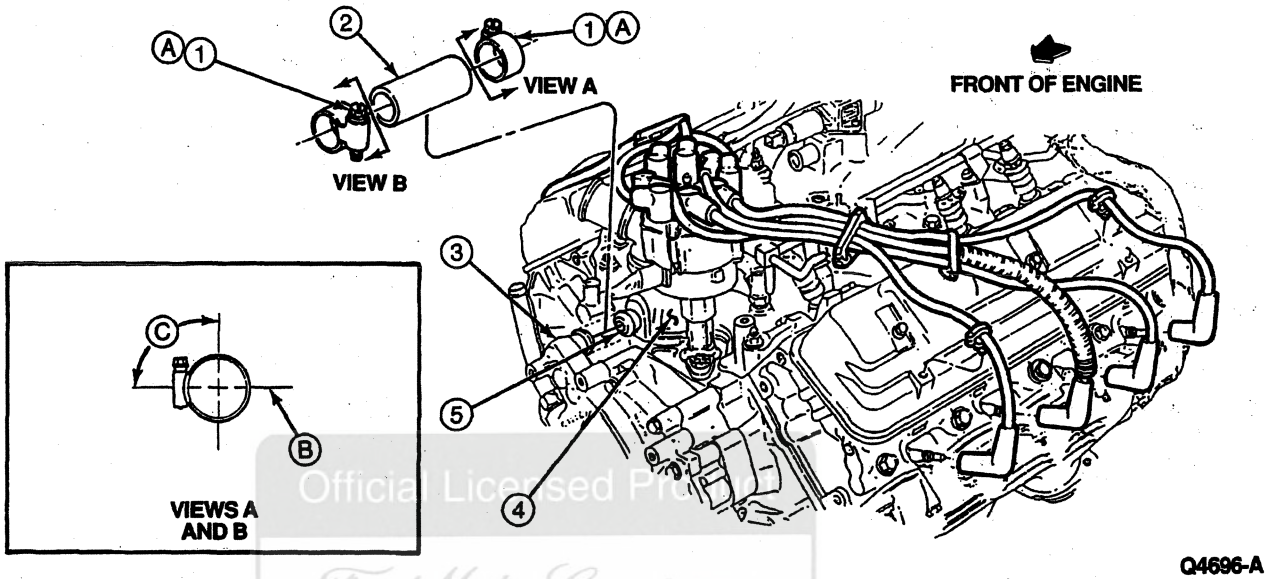

Q4696-A

Item	Part Number	Description
1	8287	Hose Clamp
2	8597	Bypass Hose
3	8501	Water Pump
4	9424	Lower Intake Manifold
5	—	Nipple (Part of 9424)

Item	Part Number	Description
A	—	Tighten to 1.3-2.2 N·m (12-20 Lb-In)
B	—	Center Line Parallel to Vertical Center Line of Engine
C	—	80 Degrees-100 Degrees

(Continued)

Water Inlet Tube, 7.3L Diesel Only

Removal

1. Drain the cooling system. Refer to Cooling System Draining, Filling and Bleeding in this section.
2. Raise vehicle.
3. Remove the lower radiator hose clamp and disconnect the lower radiator hose (8286) from the water pump inlet.
4. Remove the water pump inlet retaining bolts.
5. Remove the water pump inlet and O-ring.

Installation

1. Follow removal procedure in reverse order.

Radiator — Gas Engine

Removal

1. Drain the cooling system. Refer to Cooling System Draining, Filling and Bleeding in the Cleaning and Inspection portion of this section.
2. Remove the radiator overflow hose (8075) from the radiator (8005).
3. Remove the two upper attaching screws, lift the fan shroud (8146) out of the lower retainer clips, move away from radiator and place over fan. On F-Super Duty Motorhome Chassis vehicles remove the two screws at the bottom of the fan shroud.
4. Position the upper and lower hose clamps toward the middle of hoses. Remove the upper radiator hose (8260) and lower radiator hose (8286) from the radiator connectors.

Official Licensed Product Ford Motor Company

REMOVAL AND INSTALLATION (Continued)

5. Remove the heater water bypass hose (E4OD-equipped vehicles only) located directly below the overflow nipple on the radiator outlet tank.
6. Disconnect the two automatic transmission (if so equipped) oil cooling lines from radiator fittings.
7. Remove the two radiator upper attaching screws or bolts.
8. Tilt the radiator back approximately 25 mm (one inch) and lift directly upward, clear of the radiator support bracket (8052) and fan blade (8600).
9. If either upper radiator hose or lower radiator hose is to be replaced, position clamp toward the middle of hose and slip the hose off the connection with a twisting motion.
10. Lift the fan shroud off the fan and remove from the vehicle.

Installation

1. Inspect the radiator mounting insulators (8124). Replace if necessary.
2. Position fan shroud on fan until radiator is installed.
3. If either upper radiator hose or lower radiator hose has been replaced, install on engine (6007) with index arrow in line with mark on fitting on engine. Position clamps.
4. Install the heated water bypass hose (E4OD-equipped vehicles only) to the nipple located below the overflow tank.
5. Position radiator into engine compartment to radiator support (16138), being careful to clear fan.

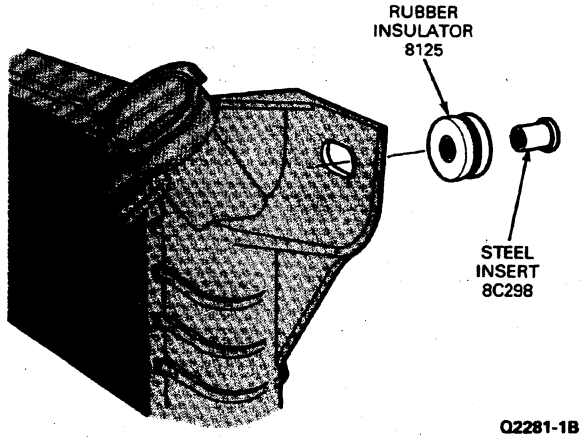

6. Install two upper attaching bolts or screws. Tighten to 11-14 N·m (8-10 lb-ft).
7. Connect the two automatic transmission (if so equipped) oil cooling lines to radiator connectors and tighten tube nuts to 16-24 N·m (12-18 lb-ft) or clamps to 4-5 N·m (35-44 lb-in).
8. Attach upper radiator hose and lower radiator hose to radiator. Position hose on radiator connection so that index arrow on hose is in line with mark on connection. Position clamps.
9. Position fan shroud on the lower retainer clips and attach the top of the fan shroud to radiator with two screw and washer assemblies. On F-Super Duty Motorhome Chassis vehicles install the two lower screws. Tighten screws to 6-8 N·m (53-71 lb-in).
10. Attach radiator overflow hose from radiator coolant recovery reservoir (8A080) to radiator.
11. **WARNING: DO NOT STAND IN LINE WITH OR NEAR RADIATOR FAN BLADE WHEN ENGINE IS RUNNING.**

    Refill cooling system. Refer to Cooling System Draining, Filling and Bleeding in the Cleaning and Inspection portion of this section.

Radiator — Diesel Engine

Removal

1. Disconnect the battery ground cables.
2. Drain the cooling system. Refer to Cooling System Draining, Filling and Bleeding in the Cleaning and Inspection portion of this section.
3. Remove the hot water bypass hose from the radiator.
4. Remove the radiator upper and lower hoses.
5. Remove the automatic transmission coolant lines from the radiator (if so equipped).
6. Remove the fan and fan clutch. Refer to Cooling Fan Blade and Fan Clutch, Mechanical in the Removal and Installation portion of this section.
7. Remove the retaining nuts and radiator from the vehicle.

Installation

1. Position the radiator into the vehicle.
2. Install radiator mounting nuts and tighten to 20-27 N·m (15-20 lb-ft).
3. Install the fan and fan clutch. Refer to Cooling Fan Blade and Fan Clutch, Mechanical in the Removal and Installation portion of this section.
4. Install the automatic transmission coolant lines onto the radiator (if so equipped).
5. Install the radiator upper and lower hoses.
6. Install the hot water bypass hose onto the radiator.
7. Refill the cooling system. Refer to Cooling System Draining, Filling and Bleeding in the Cleaning and Inspection portion of this section.
8. Connect the battery ground cables.

REMOVAL AND INSTALLATION (Continued)

Radiator Installation, F-250, F-350 5.8L (351 CID) Engines

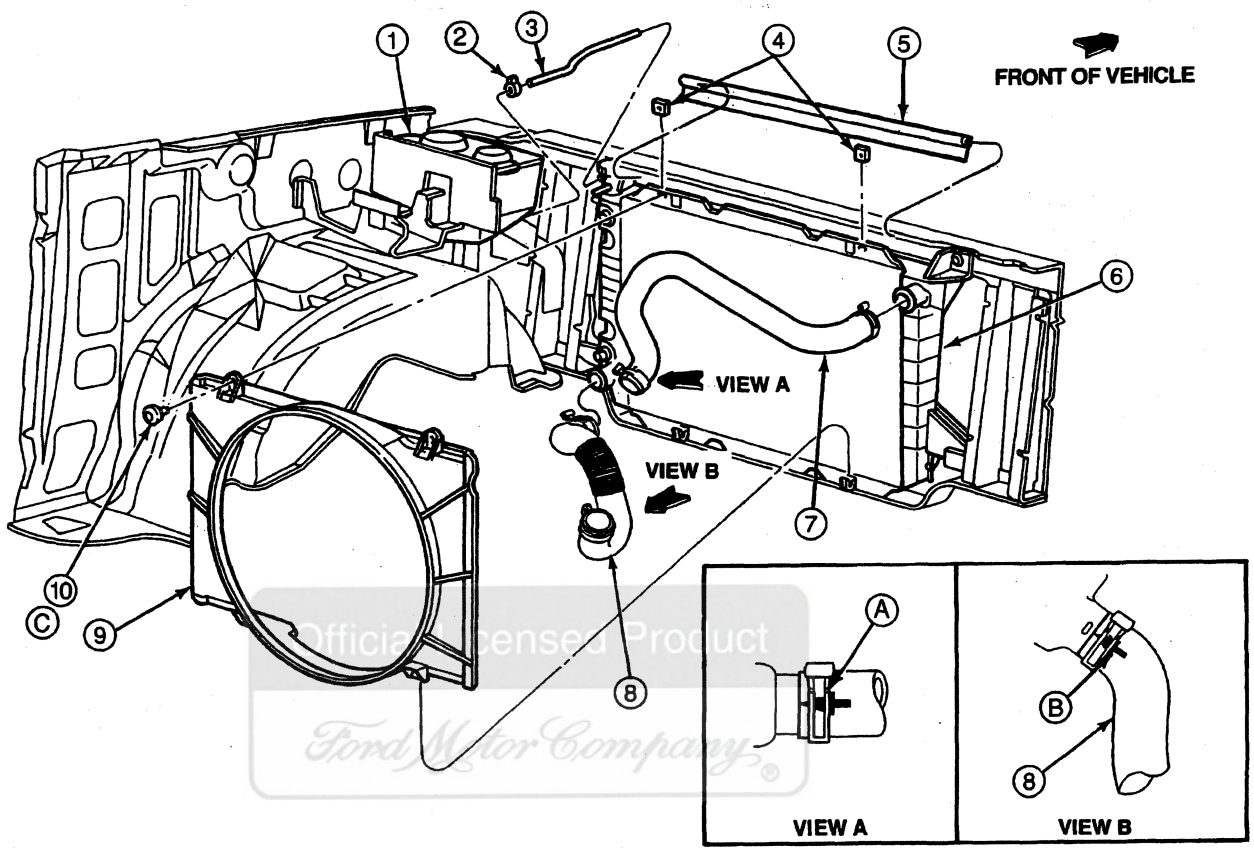

DQ0117-B

Item	Part Number	Description
1	17618	Windshield Washer Reservoir
2	389252-S100	Clamp
3	381440-S200A	Hose, Overflow
4	N804639-S2	U-Nut, M6 x 1.0
5	19E525	Air Deflector, Performance Truck Only
6	8005	Radiator
7	8260	Upper Radiator Hose

(Continued)

Item	Part Number	Description
8	8286	Lower Radiator Hose
9	8146	Fan Shroud
10	N807151-S2	Screw and Washer, M6 x 1.0
A	—	Line Up Paint Stripe Front Side of Hose
B	—	Line Up Paint Stripe with Boss on Connector
C	—	Tighten to 5-7 N·m (44-62 Lb-In)

Official Licensed Product
Ford Motor Company

REMOVAL AND INSTALLATION (Continued)

Radiator Installation, F-250, F-350 and F-Super Duty Chassis Cab with 7.5L (460 CID) Engine

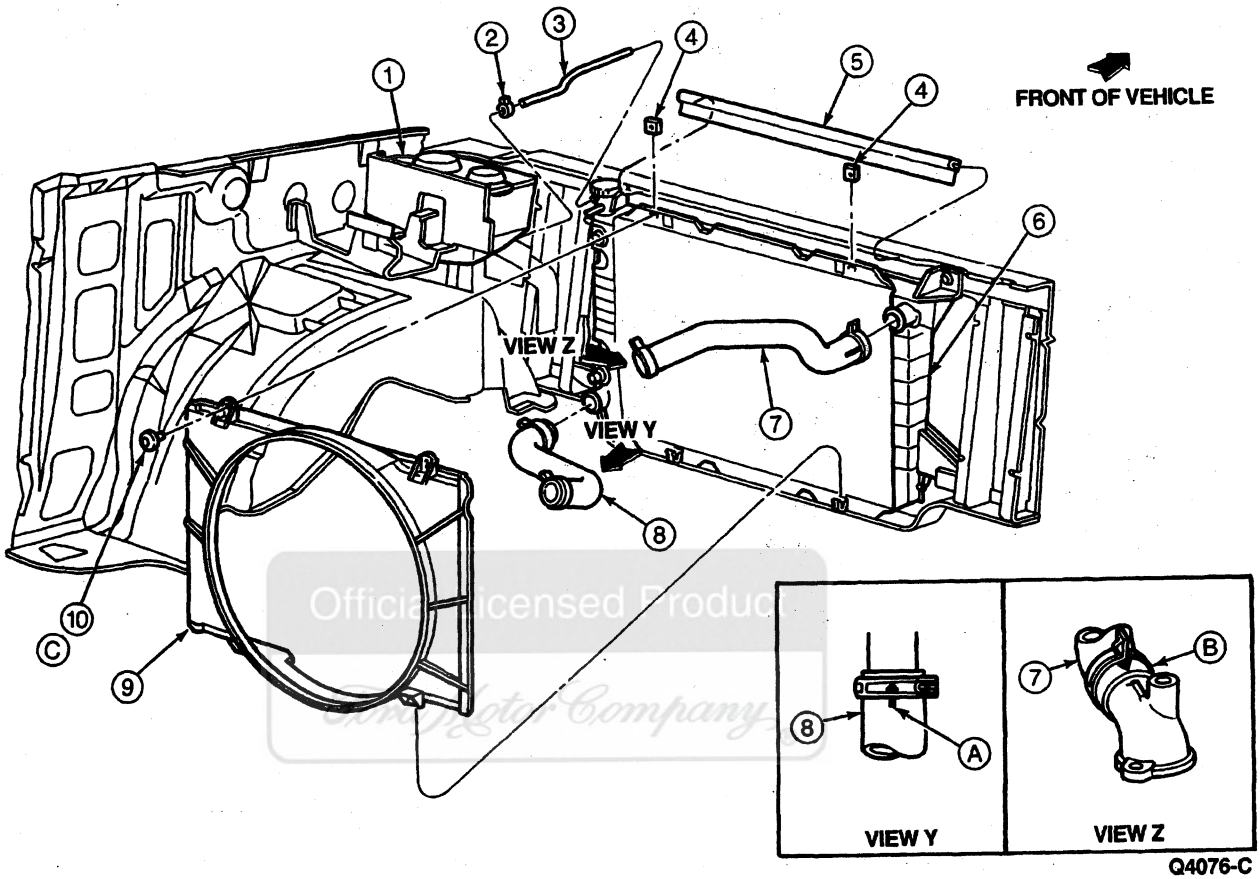

Item	Part Number	Description
1	17618	Windshield Washer Reservoir
2	389252-S100	Clamp
3	381440-S200A	Hose
4	N804639-S2	U-Nut
5	19E525	Deflector
6	8005	Radiator
7	8260	Upper Radiator Hose

(Continued)

Item	Part Number	Description
8	8286	Lower Radiator Hose
9	8146	Fan Shroud
10	N807151-S2	Screw and Washer
A	—	Align Arrow at 12 O'Clock Position
B	—	Align Arrow to Boss
C	—	Tighten to 5-7 N·m (44-62 Lb-In)

REMOVAL AND INSTALLATION (Continued)

Radiator Installation, F-Super Duty Motorhome Chassis

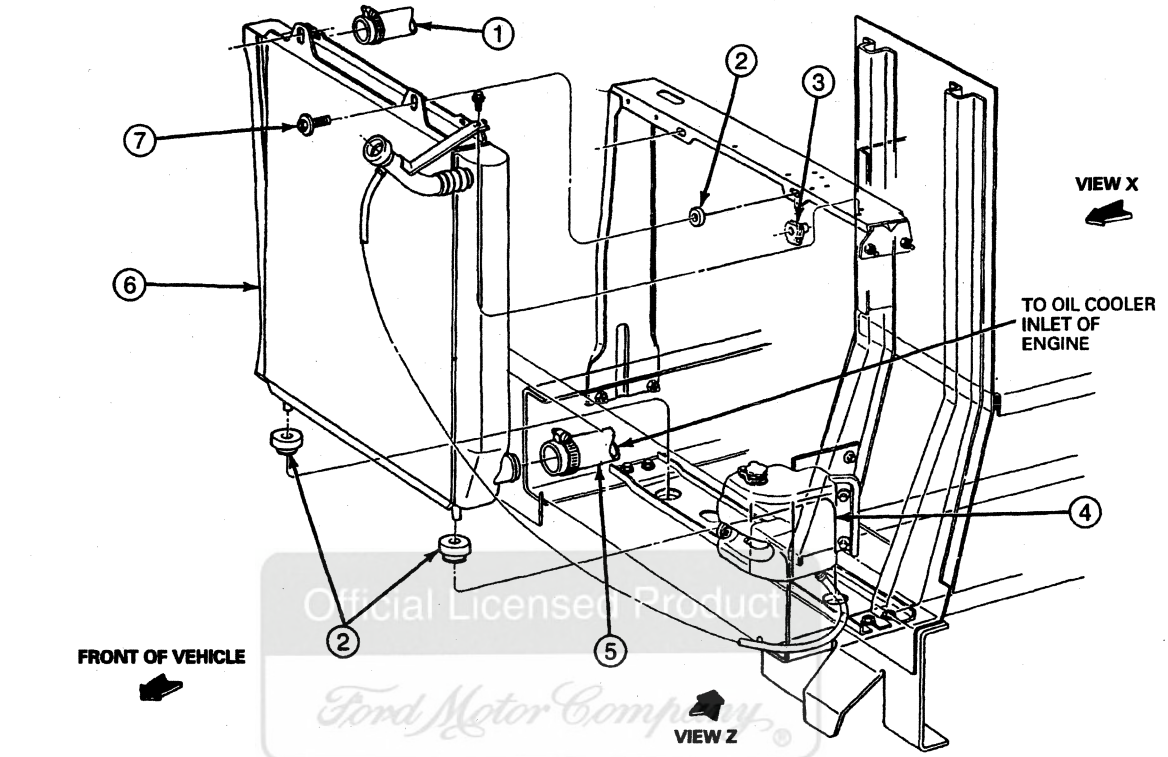

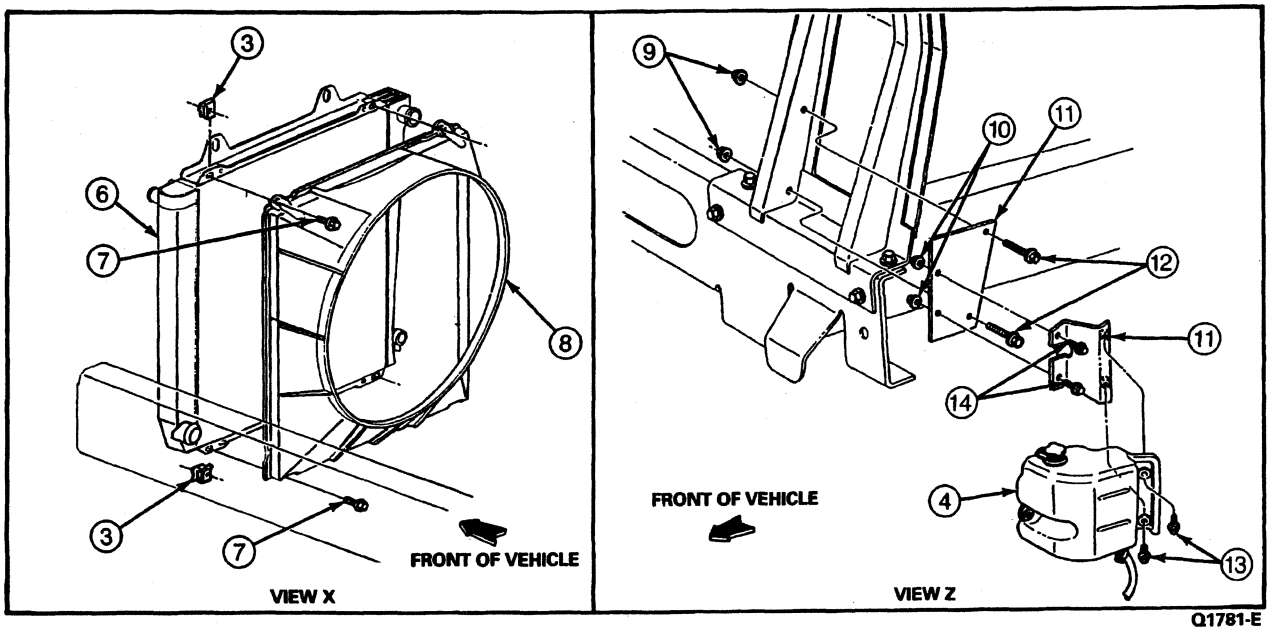

Q1781-E

Item	Part Number	Description
1	8260	Upper Radiator Hose
2	8124	Radiator Mounting Insulator

(Continued)

Item	Part Number	Description
3	N801731	Nut
4	8A080	Radiator Coolant Recovery Reservoir

(Continued)

REMOVAL AND INSTALLATION (Continued)

Item	Part Number	Description
5	8286	Lower Radiator Hose
6	8005	Radiator
7	N606691	Bolt
8	8146	Fan Shroud
9	N620482	Nut

(Continued)

Item	Part Number	Description
10	N620481	Nut
11	8052	Radiator Support Bracket
12	N606064	Bolt
13	52721	Bolt
14	N605786	Bolt

Aluminum Core Downflow

Removal

1. Drain the Cooling System. Refer to Cooling System Draining, Filling and Bleeding in the Cleaning and Inspection portion of this section.
2. Remove the 3/8-inch rubber radiator degas hose from the radiator.
3. Remove the attaching bolts and lift the fan shroud (8146) back and place it over the fan.
4. Loosen the upper radiator hose clamp and remove the upper radiator hose (8260) from the radiator (8005).
5. Disconnect the two automatic transmission (if so equipped) oil cooling lines from radiator fittings.
6. Disconnect the heated water bypass hose attached to the radiator filler neck (E4OD-equipped vehicles only).
7. Remove the four radiator attaching bolts.
8. Tilt the radiator back approximately 25 mm (one inch) and lift directly upward, clear of the radiator support (16138).
9. If either upper radiator hose or lower radiator hose is to be replaced, loosen clamp at the engine end and slip the hose off the connection with a twisting motion.
10. Lift the fan shroud off the fan and remove from the vehicle.

Installation

1. Position fan shroud on fan until radiator is installed.
2. If either upper radiator hose or lower radiator hose has been replaced, install on engine with index arrow in line with mark on fitting. Install constant tension clamps.
3. Position radiator into engine compartment to radiator support, being careful to clear fan blade.
4. Install the radiator with four bolts and tighten to specifications.
5. Connect the two automatic transmission (if so equipped) oil cooling lines to radiator connectors and tighten tube nuts to 16-24 N·m (12-18 lb-ft) or clamps to 4-5 N·m (35-44 lb-in).
6. Attach upper radiator hose and lower radiator hose. Install constant tension clamps.
7. Attach the heated water bypass hose (E4OD-equipped vehicles only).
8. Position fan shroud to radiator and attach with two bolts. Tighten bolts to specifications.
9. Attach 3/8-inch rubber radiator degas hose from radiator coolant recovery reservoir to radiator.
10. **WARNING: DO NOT STAND IN LINE WITH OR NEAR RADIATOR FAN BLADE WHEN ENGINE IS RUNNING.**

    Refill the cooling system. Refer to Cooling System Draining, Filling and Bleeding in the Cleaning and Inspection portion of this section.

Official Licensed Product Ford Motor Company

REMOVAL AND INSTALLATION (Continued)

Radiator Installation, 7.3L Diesel

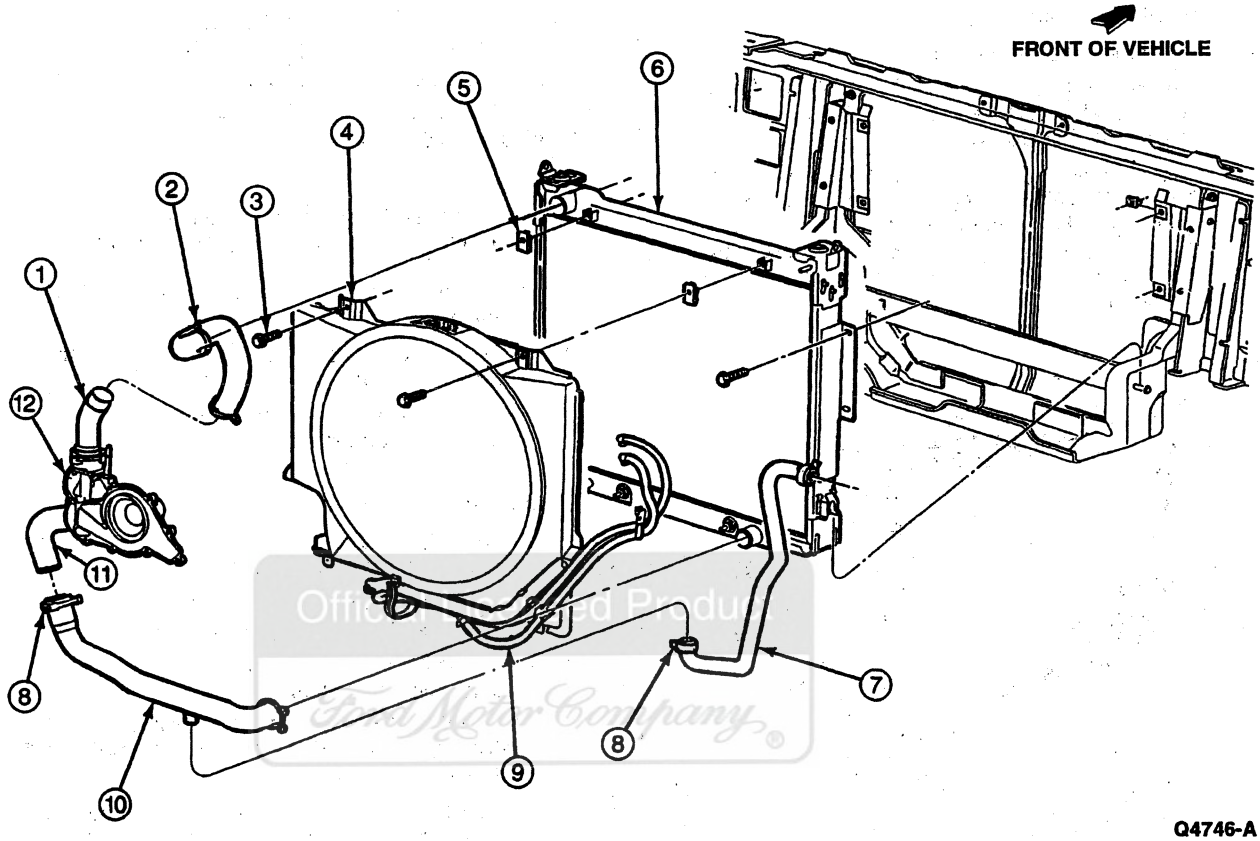

Item	Part Number	Description
1	8592	Water Hose Connection (Upper)
2	8260	Upper Radiator Hose
3	N606677-S2	Screw and Washer, M6-1 x 1.25 Hex
4	8146	Shroud
5	N800854-S2	U-Nut
6	8005	Radiator

Item	Part Number	Description
7	8C351	Hose
8	8287	Clamp
9	—	Transmission Cooler Lines (See Group 07)
1	8286	Lower Radiator Hose
11	8592	Water Hose Connection (Lower)
12	8501	Water Pump

(Continued)

Radiator Coolant Recovery Reservoir

All Except 7.3L Diesel Engine

Removal

1. Remove the tire jack handle.
2. Pinch the radiator overflow hose (8075) until it is closed. Remove the radiator overflow hose from the radiator filler neck nipple. Drain the coolant from the coolant radiator coolant recovery reservoir (8A080) into a clean container
3. Remove the nut and the radiator coolant recovery reservoir.
4. Disconnect the radiator overflow line at the radiator coolant recovery reservoir.
5. Remove the radiator overflow hose from the radiator coolant recovery reservoir.

Installation

1. Position the radiator coolant recovery reservoir and install the attaching nut.

REMOVAL AND INSTALLATION (Continued)

2. Connect the radiator overflow hose to the radiator coolant recovery reservoir.
3. Connect the radiator overflow hose to the radiator filler neck nipple.
4. Install the tire jack handle.
5. **WARNING: DO NOT STAND IN LINE WITH OR NEAR RADIATOR FAN BLADE (8600) WHEN ENGINE IS RUNNING.**

   Fill the cooling system as described in Cooling System, Draining, Filling and Bleeding in the Cleaning and Inspection portion of this section. Check for coolant leaks and proper coolant level after the engine (6007) reaches normal operating temperatures.

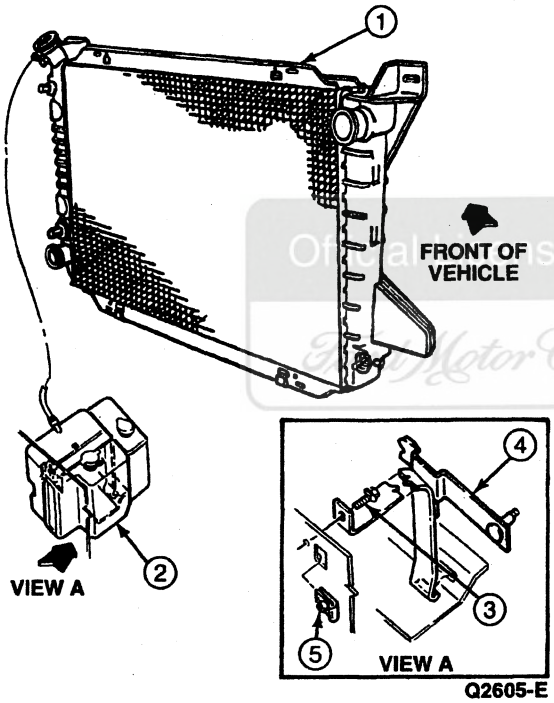

Q2605-E

Item	Part Number	Description
1	8005	Radiator
2	8A080	Radiator Coolant Recovery Reservoir

(Continued)

Item	Part Number	Description
3	N606676-S2	Bolt
4	8C062	Radiator Coolant Recovery Reservoir Strap
5	N800854-S2	U-Nut

7.3L Diesel Engine

Removal

1. Pinch the radiator overflow hose until it is closed. Remove the radiator overflow hose from the radiator filler neck nipple. Drain the coolant from the radiator coolant recovery reservoir into a clean container.
2. Remove the radiator overflow hose from the radiator coolant recovery reservoir.
3. Remove screws attaching radiator coolant recovery reservoir to front fender (16005) and remove.

Installation

1. Position the radiator coolant recovery reservoir and install the attaching screws.
2. Connect the radiator overflow hose to the radiator coolant recovery reservoir.
3. Connect the radiator overflow hose to the radiator filler neck nipple.
4. **WARNING: DO NOT STAND IN LINE WITH OR NEAR RADIATOR FAN BLADE WHEN ENGINE IS RUNNING.**

   Check for coolant leaks and proper coolant level after the engine reaches normal operating temperatures.

Official Licensed Product Ford Motor Company

REMOVAL AND INSTALLATION (Continued)

Installation View, Coolant Recovery Reservoir — 7.3L Diesel Engine

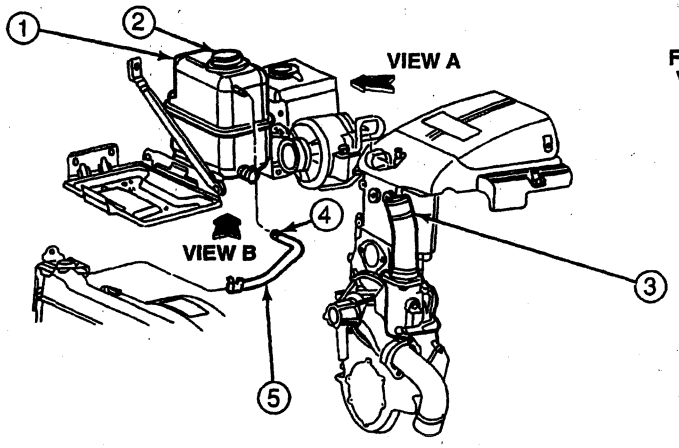

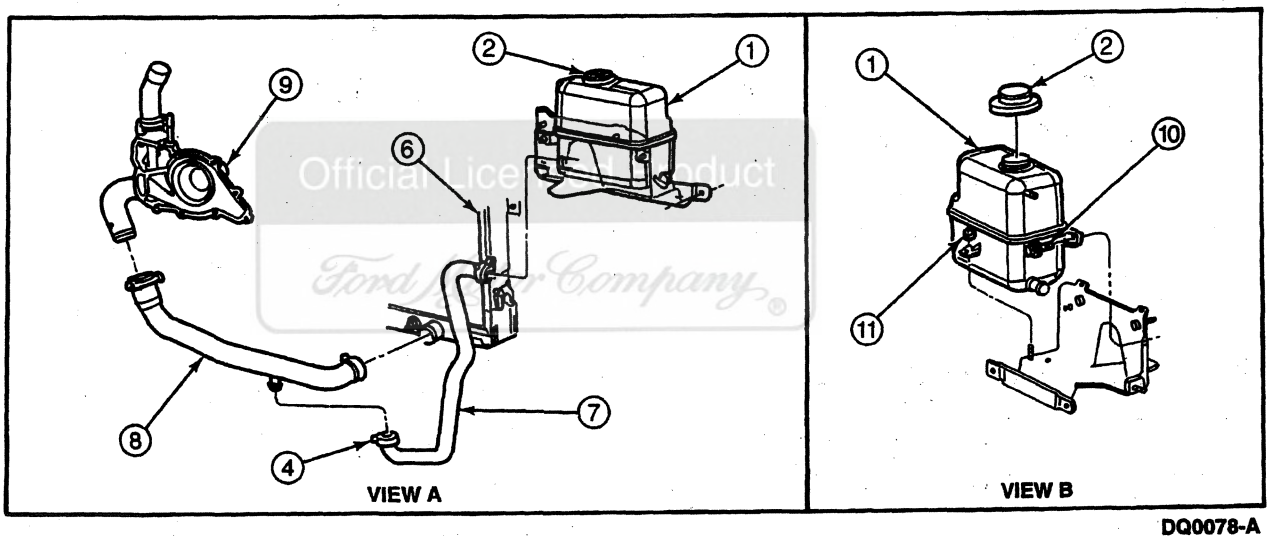

DQ0078-A

Item	Part Number	Description
1	8A080	Radiator Coolant Recovery Reservoir
2	8100	Pressure Relief Cap
3	8592	Water Hose Connection (Upper)
4	3C750	Clamp
5	8W005	Radiator Overflow Hose

Item	Part Number	Description
6	8005	Radiator
7	8C351	Hose
8	8286	Lower Radiator Hose
9	8501	Water Pump
10	N606677-S2	Screw and Washer, M6-1 x 25 Hex-Head
11	N620408-S2	Nut, M6-1 Hex Flange

(Continued)

Cooling Fan Blade and Fan Clutch, Mechanical

5.8L and 7.5L Engines

Removal

1. Remove screws retaining fan shroud (8146) to radiator (8005).
2. Remove four screws retaining clutch on water pump hub.
3. Pull fan clutch (8A616) and fan blade (8600) off water pump pilot and remove fan clutch, fan blade and shroud from vehicle.
4. Remove four screws and separate fan clutch from fan blade.

REMOVAL AND INSTALLATION (Continued)

Installation

1. Position fan blade to fan clutch and attach with four screws. Tighten screws to 16-24 N·m (12-18 lb-ft).
2. Position fan clutch, fan blade and shroud in vehicle.
3. Position fan blade and fan clutch to water pump pulley (8509) and attach with four screws. Tighten screws to 16-24 N·m (12-18 lb-ft).
4. Install shroud. Tighten screws to 6-8 N·m (53-71 lb-in).

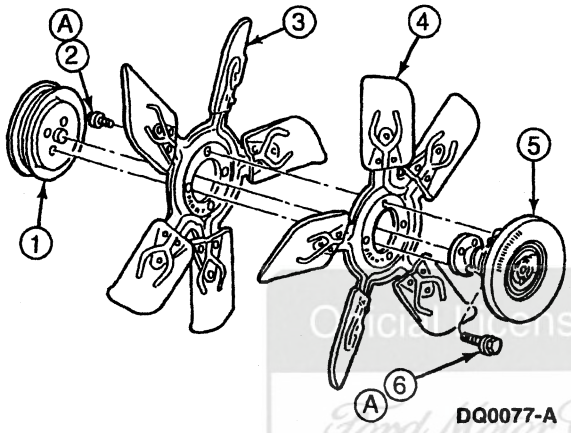

DQ0077-A

Item	Part Number	Description
1	8509	Water Pump Pulley
2	57632-S	Screw and Washer Assy, 5/16-18 x .62 Hex
3	8600	Fan Blade (5.8L)
4	8600	Fan Blade (7.5L)
5	8A616	Fan Clutch
6	380288-S2	Screw and Washer Assy, 5/16-24 x .88 Hex
A	—	16-24 N·m (12-18 Lb-Ft)

7.3L Diesel

SPECIAL SERVICE TOOL(S) REQUIRED

Description	Tool Number
Fan Clutch Nut Wrench	T93T-6312-B
Fan Clutch Pulley Holder	T94T-6312-AH

Removal

1. Partially drain the engine cooling system. Refer to Cooling System Draining, Filling and Bleeding in the Cleaning and Inspection portion of this section.
2. Remove the upper radiator hose (8260).
3. Disconnect the coolant reservoir hose at radiator.
4. **CAUTION: Fan clutch has right-hand thread. Remove by turning nut counterclockwise.**

   Remove the fan clutch, using Fan Clutch Nut Wrench T93T-6312-B and Fan Clutch Pulley Holder T94T-6312-AH, setting fan clutch in fan shroud.

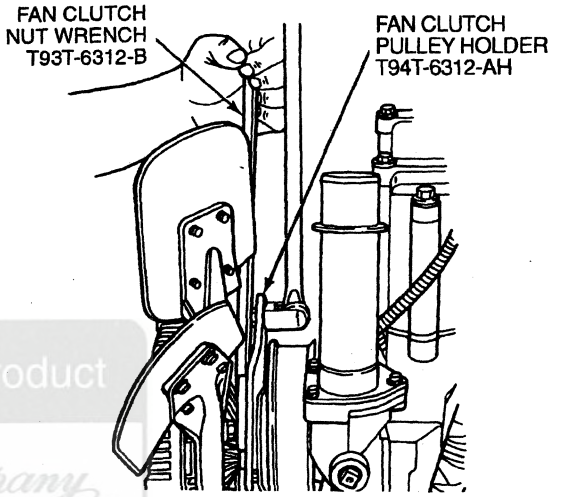

DQ0076-A

5. Remove the radiator fan shroud screws.
6. Remove the radiator fan shroud and fan clutch.
7. Remove the bolts attaching the fan blade to the fan clutch.

Installation

1. Install the bolts attaching the fan blade to the fan clutch. Tighten to 16-24 N·m (12-18 lb-ft).
2. Install the radiator fan shroud and fan clutch.
3. Install the radiator fan shroud screws.
4. **CAUTION: Fan clutch has right-hand thread. Install by turning nut clockwise.**

   Install the fan clutch, using Fan Clutch Nut Wrench T93T-6312-B and Fan Clutch Pulley Holder T94T-6312-AH.

Official Licensed Product Ford Motor Company

REMOVAL AND INSTALLATION (Continued)

Fan Blade and Clutch Assembly, 7.3L Diesel Engine

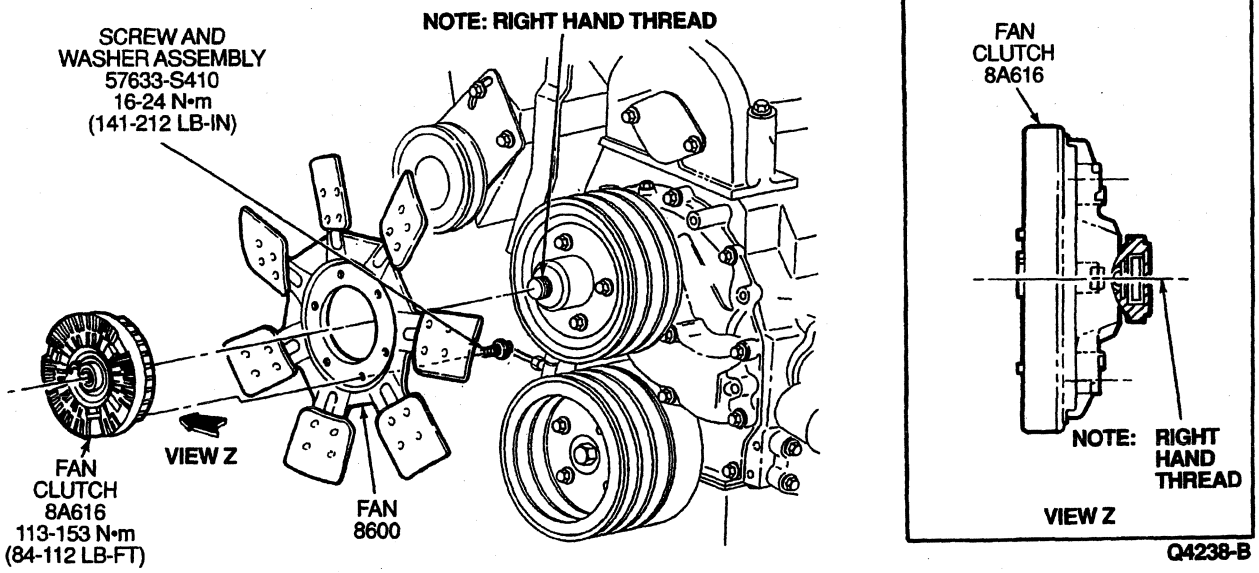

5. Install the coolant reservoir hose to radiator.
6. Install the upper radiator hose.
7. Refill the engine cooling system as described in Cooling System, Draining, Filling and Bleeding in the Cleaning and Inspection portion of this section.

Official Licensed Product
Ford Motor Company

Radiator Draincock

The radiator draincock is located near the bottom of the radiator.

Removal

1. Turn the radiator draincock (8115) counterclockwise to unscrew. When the radiator draincock is unscrewed to the end of the threads, pull the stem from the radiator inlet tank.

Installation

1. Tighten the radiator draincock by turning clockwise to 1.0 N·m (9 lb-in).

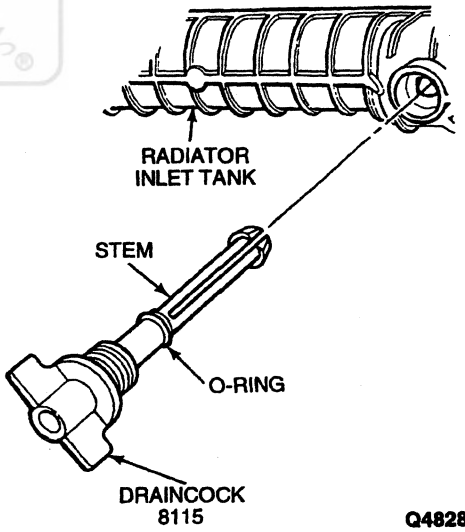

Water Temperature Indicator Sender Unit Gasoline Engines

Removal

1. **CAUTION: Do not remove the pressure relief cap on a hot engine.**

   Remove pressure relief cap to relieve any pressure and then replace pressure relief cap. This reduces coolant loss during sender replacement.
2. Disconnect the temperature sending unit wire at the sending unit.

REMOVAL AND INSTALLATION (Continued)

Installation

1. Prepare the new temperature sending unit for installation by applying the Pipe Sealant with Teflon® D8AZ-19554-A or equivalent meeting Ford specification WSK-M2G350-A2, or a small amount of electrically conductive sealer to the threads.
2. Remove the temperature sending unit from cylinder head (6049) and immediately install the new temperature sending unit. Tighten to 11-24 N·m (8-18 lb-ft).
3. Connect the wire to the temperature sending unit.
4. Refill cooling system to replace lost coolant.
5. Start the engine and check the sending unit operation.

Engine Coolant Temperature Sender, 5.8L

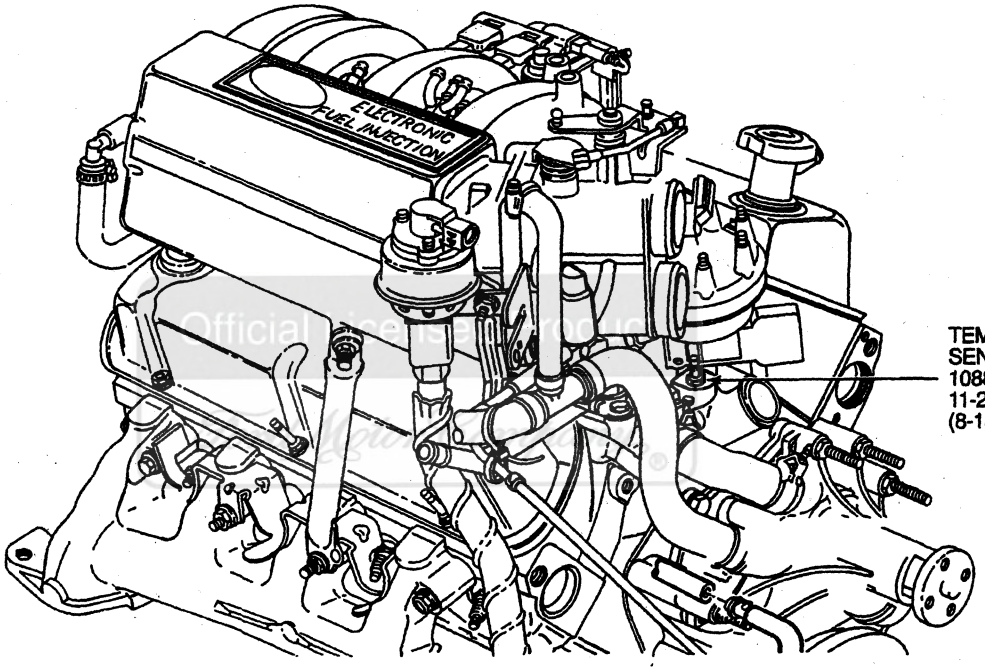

K15267-B

7.3L Diesel

Removal

1. Disconnect the temperature sending unit wire at the water temperature indicator sender unit (10884).

Installation

1. Prepare the new water temperature indicator sender unit for installation by applying the Pipe Sealant with Teflon® D8AZ-19554-A or equivalent meeting Ford specification WSK-M2G350-A2, or a small amount of electrically conductive sealer to the threads.
2. Remove the water temperature indicator sender unit from cylinder head and immediately install the new water temperature indicator sender unit. Tighten to 11-24 N·m (8-18 lb-ft).
3. Connect the wire to the water temperature indicator sender unit.
4. Refill cooling system to replace lost coolant.
5. Start the engine (6007) and check the sending unit operation.

Engine Coolant Temperature (ECT) Sensor

Refer to Section 03-14.

Block Heater Wiring

Removal

1. NOTE: Refer to the following illustrations for block heater cable routing.

   Unplug cable from block heater (6A051).
2. Remove screw from clip securing battery cables and block heater wiring (6B018) to inner fender bracket.
3. Cut and remove tie straps.

REMOVAL AND INSTALLATION (Continued)

4. Using door trim panel removing tool, remove cable retainers from brackets and frame (5005).
5. Remove cable from vehicle.

Installation

1. Follow removal procedure in reverse order.

Block Heater, 5.8L

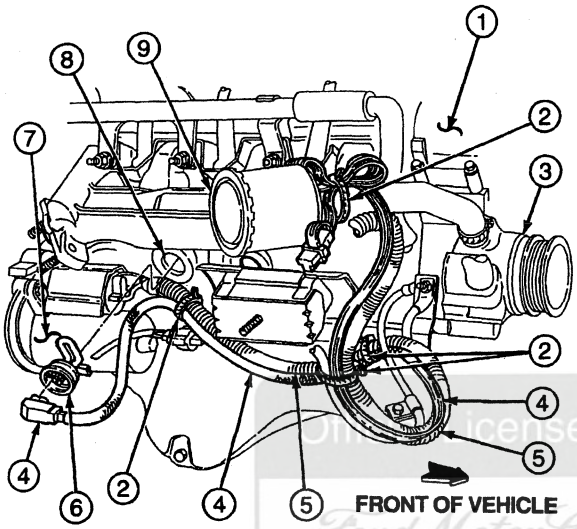

Item	Part Number	Description
1	10300	Generator
2	95873-S	Strap
3	9A486	Secondary Air Injection Pump
4	6B018	Block Heater Wiring
5	14300	Battery to Starter Relay Cable
6	6A051	Block Heater
7	11001	Starter Motor
8	—	Core Plug Hole (Part of 6010)
9	9H467	Secondary Air Injector Pump Silencer and Bracket

(Continued)

Block Heater, 7.5L

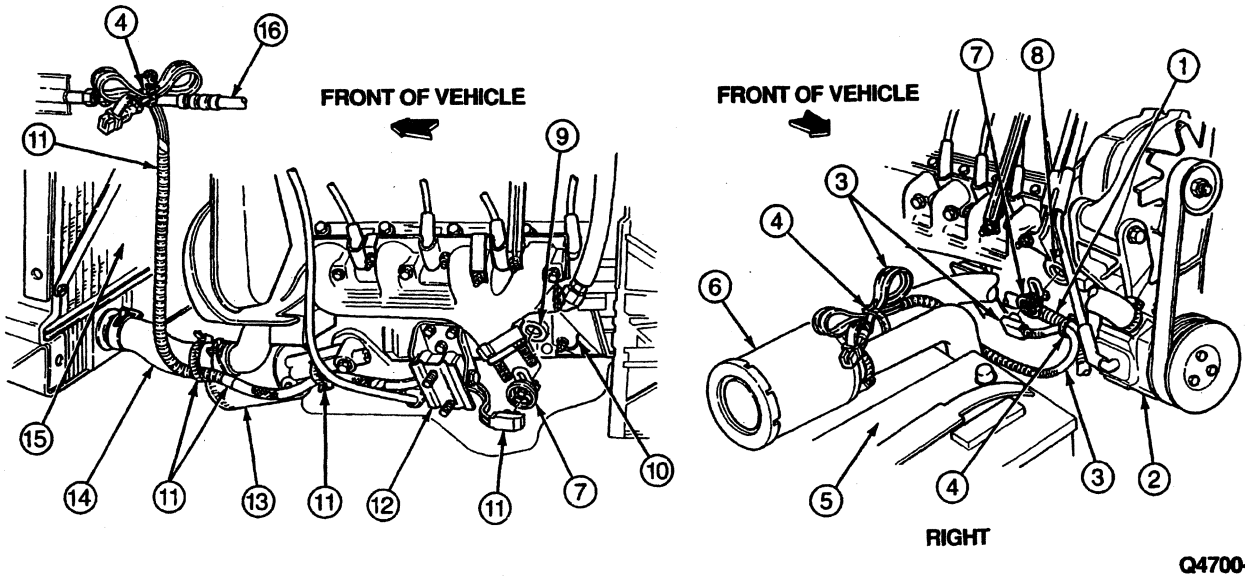

REMOVAL AND INSTALLATION (Continued)

Item	Part Number	Description
1	14300	Battery to Starter Relay Cable
2	9A486	Secondary Air Injection Pump
3	6B018	Block Heater Wiring (Right Side)
4	95873-S	Strap
5	10655	Battery
6	9G427	Secondary Air Injection Pump Silencer and Bracket
7	6A051	Block Heater
8	—	Right Side Core Plug Hole (Part of 6010)

(Continued)

Item	Part Number	Description
9	—	Left Side Core Plug Hole (Part of 6010)
10	6010	Cylinder Blocks
11	6B018	Block Heater Wiring (Left Side)
12	6038	Front Engine Support Insulator
13	6731	Oil Filter
14	8286	Lower Radiator Hose
15	8005	Radiator
16	19D734	A/C Manifold and Tube

Engine Block Heater Cable Routing, 7.3L Engine

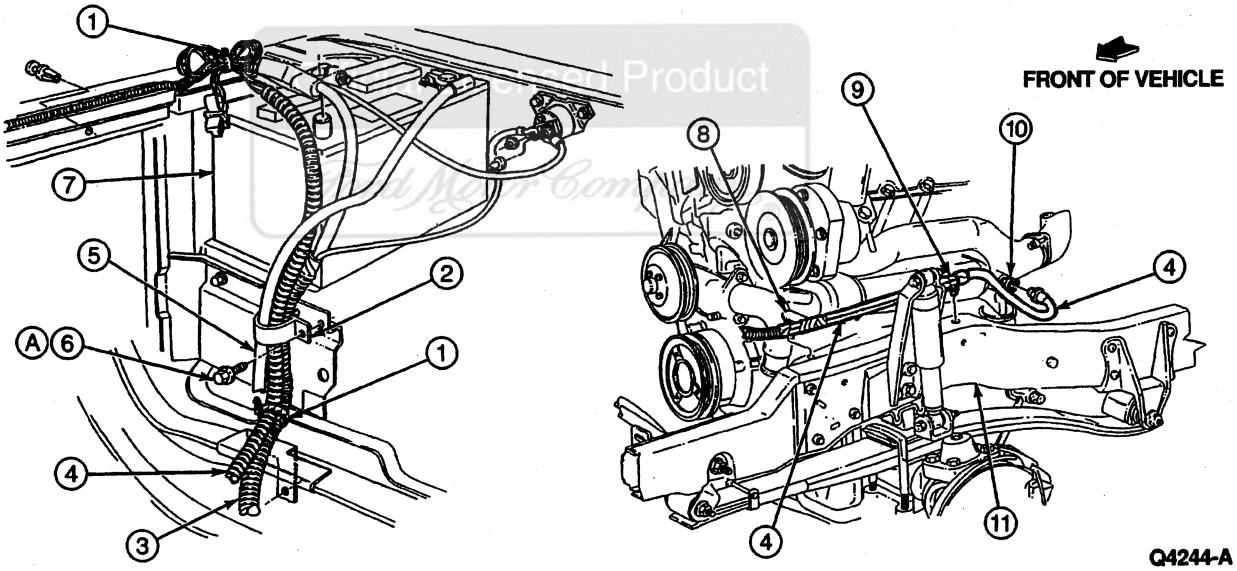

Item	Part Number	Description
1	95873-S	Strap
2	37806-S100	Clip
3	14B060	Battery Cable Assy
4	6B018	Engine Block Heater Wiring
5	14301	Battery Ground Cable
6	N610957-S16	Screw, 6.3-1.81 x 13

(Continued)

Item	Part Number	Description
7	10655	Battery
8	—	Locator (Part of 6B018)
9	—	Locator (Part of 6B018)
10	6A051	Block Heater
11	5005	Frame
A	—	Tighten to 7-9 N·m (62-80 Lb-In)

REMOVAL AND INSTALLATION (Continued)

Block Heater

Removal

1. Drain the cooling system. Refer to Cooling System Draining, Filling and Bleeding in the Cleaning and Inspection portion of this section.
2. Remove block heater (6A051). Note the position that the element is pointed to (e.g., 12:00, 6:00, etc.)

Installation

1. Clean the inside diameter of the core plug hole machined surface and hole entrance. Remove any burrs at the hole entrance to avoid damage to the O-ring.
2. Cover rubber O-ring and core opening with a liberal coating of chassis grease (C1AZ-19590-B, C, D, E or equivalent).
3. Insert block heater in core plug hole in the same position as it was removed.
4. Tighten screw in normal clockwise direction. Torque to 1.6-1.8 N·m (14-16 lb-in).
5. Refill cooling system. Refer to Cooling System, Draining, Filling and Bleeding in the Cleaning and Inspection portion of this section.

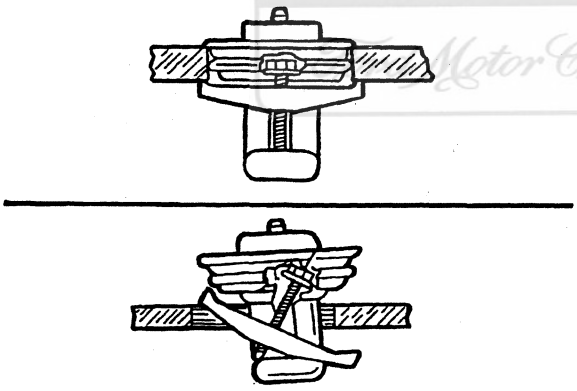

TYPICAL BLOCK HEATER-6A051

J5700-A

SERVICE PROCEDURES

Transmission Oil Cooler Connection Leaks, Aluminum Radiator

Check to see that the fitting nut is fully tightened. If the leak persists, apply a thin, even coat of Dow Corning 1200 primer or equivalent using a brush. Allow to dry for 10 minutes at room temperature. Apply Dow Corning Silastic® 734RTV or equivalent in undiluted form around the leaking connection and allow it to dry for one hour.

NOTE: In-tank transmission oil coolers must not be replaced. Instead, for aluminum radiators, replace the complete radiator assembly.

CLEANING AND INSPECTION

Radiator Coolant Level Check

Engine (6007) should be at normal operating temperature.

In addition to maintaining the correct coolant level, the radiator fins must be cleaned and the cooling system inspected periodically for leaks in order to make sure the system operates at maximum efficiency.

Check the cooling system for dirty or rusty appearance. Dirty or rusty coolant requires replacement to protect the cooling system from corrosion damage.

Coolant Condition Check

1. **WARNING: NEVER REMOVE THE PRESSURE RELIEF CAP UNDER ANY CONDITIONS WHILE THE ENGINE (6007) IS OPERATING. FAILURE TO FOLLOW THESE INSTRUCTIONS CAN RESULT IN DAMAGE TO THE COOLING SYSTEM OR ENGINE AND/OR PERSONAL INJURY. TO AVOID HAVING SCALDING HOT COOLANT OR STEAM BLOW OUT OF THE RADIATOR (8005), USE EXTREME CARE WHEN REMOVING THE PRESSURE RELIEF CAP FROM A HOT RADIATOR. WAIT UNTIL THE ENGINE HAS COOLED, THEN WRAP A THICK CLOTH AROUND THE PRESSURE RELIEF CAP AND TURN IT SLOWLY TO THE FIRST STOP. STEP BACK WHILE THE PRESSURE IS RELEASED FROM THE COOLING SYSTEM. WHEN IT IS CERTAIN ALL THE PRESSURE HAS BEEN RELEASED, PRESS DOWN ON THE PRESSURE RELIEF CAP (STILL WITH A CLOTH), TURN AND REMOVE.**

   NOTE: It is not sufficient to inspect only the coolant in the radiator coolant recovery reservoir (8A080). The coolant in the radiator coolant recovery reservoir may not be representative of the coolant in the rest of the system. For reservoir coolant to be representative of system coolant, engine must have been operated long enough and gotten hot enough for an extensive exchange of coolant between the radiator and the radiator coolant recovery reservoir since the last time coolant was added to the radiator coolant recovery reservoir.

   Allow engine to cool and remove pressure relief cap.

Official Licensed Product Motor Company

CLEANING AND INSPECTION (Continued)

2. Inspect coolant in both radiator and radiator coolant recovery reservoir. Coolant should be a green or blue color (depending on brand of antifreeze used).

   Clear coolant or coolant only a very light green or blue indicates that there is only water or a very weak antifreeze mixture in the system. Advise the owner of the need for the correct 50/50 coolant mixture.

   A very muddy brown color indicates an unauthorized brand of stop-leak has been used. This can eventually plug the system, causing overheating. Advise the owner that the best course is to drain the system and repair the original concern, flush the system, and refill with correct 50/50 coolant mixture and, if necessary, Cooling System Stop Leak Pellet D9AZ-19558-A or Cooling System Stop Leak Powder E6AZ-19558-A or equivalent meeting specification ESE-M99B170-A.

   Make clear to the customer that any stop-leak material is not a satisfactory repair for a serious cooling system concern, such as a leaking water pump (8501), gasket, or radiator.

   A reddish brown color indicates rust in the cooling system. Advise the customer that the best course is to flush the cooling system and refill with the correct 50/50 coolant mixture. Ford Premium Cooling System Fluid E2FZ-19549-AA or equivalent meeting Ford specifications ESE-M97B44-A and ESE-M97B43-A contains corrosion inhibitors. In addition, add 1.4 liters (1.5 qt) of Heavy-Duty Cooling System Additive FW-15 or equivalent meeting Ford specification ESN-M99B169-A.

   An iridescent sheen on the top of the coolant indicates a small amount of oil entering the coolant. This is common in high-mileage vehicles.

3. **CAUTION: If there is coolant in the engine oil, the cause must be corrected and the oil changed or engine damage will occur.**

   Check the engine oil on the oil level dipstick (6750) to see if any coolant is entering the engine oil as indicated by drops of coolant visible in the oil or a milky appearance to the oil. If the oil checks out OK, inform the customer that, while not an immediate problem, the situation should be closely monitored during routine maintenance.

4. **CAUTION: Severe oil leakage to the engine coolant, as indicated by a milky appearance to the coolant, must be corrected or severe engine damage will occur.**

   If the coolant is a milky brown color (like coffee with heavy cream), engine oil is entering the coolant. On 7.3L diesel and 7.5L gasoline engines the most probable cause is a leak in the engine oil cooler. Remove and inspect to find the problem.

   If the oil cooler checks out OK, the head gasket (6051) may be leaking around the oil passageway to the cylinder head (6049). It will be necessary to remove the cylinder head, inspect for the problem, and replace the head gasket. If the head gasket checks out OK, then a crack between an engine oil gallery and the cooling passageways could be the cause. Inspect the cylinder blocks (6010) and cylinder head. Refer to Section 03-00.

   A reddish milky appearance to the coolant indicates that transmission oil is leaking into the coolant, indicating a leaking transmission fluid cooler (7A095).

5. **CAUTION: If coolant is found to be entering the transmission fluid, the cause must be corrected or transmission damage will occur.**

   Check transmission fluid to make sure coolant has not mixed into transmission fluid as indicated by a milky appearance. If it has, it will be necessary to flush transmission (7003) and replace filter. Refer to Group 07. Replace radiator assembly, flush cooling system, refill transmission, and refill cooling system with correct 50/50 coolant and antifreeze mixture.

6. If chunks of rust are visible in the inlet tank in crossflow radiators, flush the cooling system.

7. If there is puffy white corrosion around the tubes where they are attached to the core headers, flush the system. If there is corrosion on aluminum radiator parts, there is going to be corrosion on aluminum engine parts that come in contact with coolant.

8. Advise the owner of the importance of using the proper 50/50 mixture of water and Ford E2FZ-19549-AA Premium Cooling System Fluid or equivalent meeting specification ESE-M97B44-A that contains corrosion inhibitors. In addition, add 1.4 liters (1.5 quarts) of Heavy-Duty Cooling System Additive FW-15 or equivalent meeting Ford specification ESN-M99B169-A.

9. If the appearance of the coolant is OK, use a hand-held refractometer, such as Rotunda Battery / Antifreeze Tester 014-R1060 or equivalent to verify proper coolant concentration. The range is: (minimum) 45/55, (maximum) 60/40.

10. If the cooling system is found to be low on coolant, top off only with a premixed solution.

Licensed Product Motor Campa

CLEANING AND INSPECTION (Continued)

11. If a weak concentration is found, add straight coolant sparingly until concentration readings are within acceptable levels.
12. If too strong a concentration is found, remove a small volume of coolant and add water sparingly until coolant readings again fall within the specified levels.
13. NOTE: Make sure coolant is thoroughly mixed before taking readings. This is accomplished by running the engine until the water thermostat opens.

    Recheck coolant concentration to make sure the coolant has been brought into the proper concentration.

Cooling System Hoses and Clamps

1. NOTE: Remember that the cooling system hoses operate under a positive pressure of approximately 90 kPa (13-16 psi), temperatures of over 95°C (200°F), and are subject to considerable vibration. Replace any hoses with cuts or deterioration as they are likely to fail on the road with the attendant risk of engine damage.

   Inspect hoses for:

   - Visible signs of deterioration such as cracking or checking. Replace if there is visible deterioration.
   - Swelling near clamps and at hose ends. Replace if there is swelling.
   - Oil or oily dirt on hoses from engine oil leaks or careless filling. Clean off oil and oily dirt on hoses. Oil will attack rubber over time. If there is weakening or deterioration of a hose, replace it.
   - Cuts. If cut on hose is other than a very superficial cut, replace hose.
   - Hose contacting metal parts, especially sharp edges. If contacting metal parts, loosen clamps and relocate hose. In some cases it may be necessary to put plastic shielding on hose to protect it. If hose has already been cut or worn, replace it.
2. NOTE: Reasonably fresh replacement hoses should be used. Replacement hoses that have been in storage for several years should be checked for ozone-caused hardening. Hoses which have become hard will be difficult to seal and can break in service.

   Inspect clamps. Replace as necessary.

Cooling System, Draining, Filling and Bleeding

WARNING: DO NOT STAND IN LINE WITH OR NEAR ENGINE COOLING FAN BLADE (8600) WHEN ENGINE (6007) IS RUNNING.

WARNING: NEVER REMOVE THE PRESSURE RELIEF CAP UNDER ANY CONDITIONS WHILE THE ENGINE IS OPERATING. FAILURE TO FOLLOW THESE INSTRUCTIONS CAN RESULT IN DAMAGE TO THE COOLING SYSTEM OR ENGINE OR PERSONAL INJURY. TO AVOID HAVING SCALDING HOT COOLANT OR STEAM BLOW OUT OF THE RADIATOR (8005), USE EXTREME CARE WHEN REMOVING THE PRESSURE RELIEF CAP FROM A HOT RADIATOR. WAIT UNTIL THE ENGINE HAS COOLED, THEN WRAP A THICK CLOTH AROUND THE PRESSURE RELIEF CAP AND TURN IT SLOWLY TO THE FIRST STOP. STEP BACK WHILE THE PRESSURE IS RELEASED FROM THE COOLING SYSTEM. WHEN YOU ARE SURE ALL THE PRESSURE HAS BEEN RELEASED, PRESS DOWN ON THE PRESSURE RELIEF CAP (STILL WITH A CLOTH), TURN AND REMOVE IT.

To prevent loss of coolant when draining the radiator, attach a hose on the radiator draincock (8115) and drain the coolant from the radiator into a clean container.

To drain the radiator, open the radiator draincock located at the bottom of the radiator and remove the pressure relief cap or supply tank cap. The cylinder block of the V-8 engine is drained by removing the drain plugs located on both sides of the cylinder blocks (6010). The six-cylinder engines have one drain plug located at the right rear of the cylinder blocks.

If replacing coolant, dispose of old coolant in accordance with applicable federal, state, and local laws and regulations. Promptly clean up any spilled coolant.

Without degas bottle, fill the cooling system by installing the cylinder block drain plug(s) and close the radiator draincock. Disconnect the heater outlet hose at the water pump (8501) to bleed or release trapped air in the system. When the coolant begins to escape, connect the heater outlet hose.

Fill the radiator until the coolant is between the cap seal in the filler neck to 38 mm (1-1/2 inches) below the cap seal. Install pressure relief cap.

Start engine, warm up, shut off engine. Allow engine to cool, remove pressure relief cap and check coolant level. Fill as required.

With degas bottle, fill the cooling system by installing all drain plugs and close the radiator draincock. Fill the degas bottle until the coolant level stabilizes at the top hose of the degas bottle. Start engine, warm up, shut off engine. Allow engine to cool. Verify that the level is within the fill range on the bottle.

CLEANING AND INSPECTION (Continued)

Cooling System, Cleaning

Cooling System Flush Procedure

Radiator Installed

SPECIAL SERVICE TOOL(S) REQUIRED

Description	Tool Number
Heater Hose Disconnect Tool	T85T-18539-AH

NOTE: When disposing of used coolant, always do so in accordance with all applicable federal, state and local laws and regulations.

To remove rust, sludge and other foreign material from the cooling system, use Ford Premium Cooling System Flush F1AZ-19A503-A or equivalent meeting Ford specification ESR-M14P7-A. Flush system using Rotunda Cooling System Flusher 164-R3658 or equivalent. Removal of such material restores cooling efficiency and avoids overheating.

Always remove the water thermostat (8575) prior to pressure flushing. A pulsating or reversed direction of flushing water flow will loosen sediment more quickly than a steady flow in the normal direction of coolant flow. In severe cases where cleaning solvents will not properly clean the cooling system for efficient operation, use the pressure flushing method. Various types of flushing equipment are available.

Do not back-flush cooling systems that have a water shutoff valve in the heater system, or damage to the valve can result.

Radiator Removed

1. **CAUTION: Radiator internal pressure must not exceed 138 kPa (20 psi). Damage can result.**

   Back-flush radiator (8005). Position a high-pressure water hose in lower radiator hose location and back-flush.
2. Remove water hose connection (8592) and water thermostat as outlined.
3. Back-flush engine (6007). Position high-pressure hose into engine through water thermostat and back-flush engine.

Heater Core Back-Flushing

All engine cooling system flushing and back-flushing procedures must include a separate back-flushing of the heater or air conditioning / heater system heater core (18476), after the flushing or back-flushing of the engine cooling system. This will prevent engine cooling system particles from clogging the heater core tubes and reducing (or eliminating) coolant flow through the heater core.

The heater core must be back-flushed separately from the engine cooling system for proper back-flush water flow direction through the heater core.

1. The correct heater core back-flushing procedure is as follows:

   Disconnect the outlet heater water hose (18472) from the water pump fitting and install a female garden hose-end fitting adapter in the end of the outlet heater water hose. Secure with a hose clamp (8287).
2. Connect the female garden hose-end of the outlet hose clamp to the male end of a water supply garden hose.
3. Disconnect the heater core inlet hose clamp from the engine block fitting and allow to drain onto suitable container.
4. If a heater water control valve (18495) is installed in the heater core inlet hose clamp, check to be certain the heater water control valve is open (no vacuum).
5. Turn the water supply valve on and off several times so that the surge action will help to dislodge larger stubborn particles from the tubes. Allow full water pressure to flow for approximately five minutes.
6. If a heater water control valve is installed in the heater core inlet hose clamp, apply vacuum to the water valve vacuum motor to make sure heater water control valve operates and closes properly to prevent water leakage. Replace the heater water control valve if required.
7. Remove the heater water hose and female garden hose-end adapter from the end of the outlet hose clamp and connect the outlet hose clamp onto the water pump fitting.
8. Connect the inlet heater hose onto the engine block fitting.
9. Fill the cooling system as described in Cooling System, Draining, Filling and Bleeding in this section.
10. Test the system for proper heater performance.

Pressure Relief Cap

1. Inspect the areas under the vacuum valve and rubber seal for rust or dirt particles.
2. Using warm tap water, raise and clean the vacuum valve and rubber seals. Thoroughly flush away loose rust or dirt particles trapped under the vacuum valve and rubber seal and on the surfaces of the seals.
3. Inspect and remove any imbedded rust or dirt particles on the sealing surfaces of the rubber seal.

CLEANING AND INSPECTION (Continued)

4. Inspect the radiator filler neck opening for rust or dirt particles on the sealing surface at the bottom of the filler neck opening. Use a clean cloth and wipe the sealing surface to remove any rust or dirt particles. If paint is observed on the filler neck sealing surface, remove it using paint thinner.

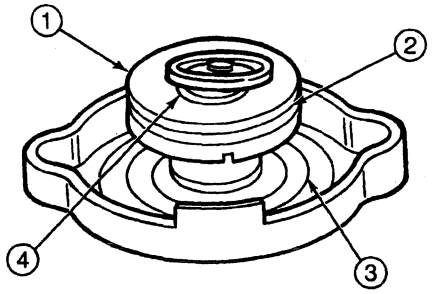

RADIATOR CAP-8100

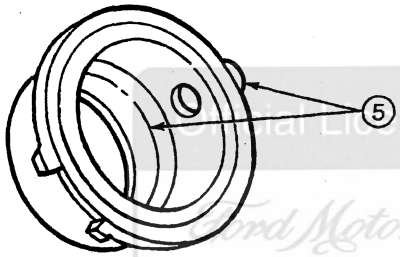

RADIATOR FILLER NECK OPENING

Q1413-K

Item	Part Number	Description
1	—	Seal Surface (Part of 8100)
2	—	Under Rubber Seal (Part of 8100)
3	—	Overflow System Seal with Recovery System (Part of 8100)
4	—	Under Vacuum Valve (Part of 8100)
5	—	Sealing Surface (Part of 8100)

Radiator

Internal

Do not use caustic cleaning solutions or copper/brass radiator cleaning agents on aluminum radiators (8005). Internal cleaning of the aluminum tubes can be accomplished with sonic cleaning equipment.

Fan Blade

WARNING: DO NOT ATTEMPT TO STRAIGHTEN OR REPAIR FAN. REPLACE FAN BLADE IF DAMAGED.

Inspect fan for damage or cracking. Cracking is most likely to occur near the base of each individual blade. If fan is damaged, replace as outlined in Section 03-05.

Coolant in Oil

Inspection

1. Plug in block heater (6A051) to warm coolant.
2. Drain engine oil and remove oil bypass filter (6714). Leave oil pan drain plug (6730) out of oil pan (6675).
3. Remove engine glow plug. Refer to Section 03-07B.
4. Remove pressure relief cap and install Rotunda Cooling System Pressurization Kit 014-R1072 or equivalent. Refer to cooling system pressure test in this section.
5. Pressurize cooling system to 96.5 kPa (14 psi).
6. Inspect area around oil pump tube (6615), oil filter adapter (6881), and oil filter adapter for evidence of coolant leaks.
7. If leak is found at oil cooler, the cooler must be removed and pressure tested for internal leaks using Oil Cooler Tester Kit 014-00944 or equivalent. Repair or replace as necessary.

Special Licensed Product Ford Motor Company

CLEANING AND INSPECTION (Continued)

Engine Oil Cooler, 7.3L Diesel

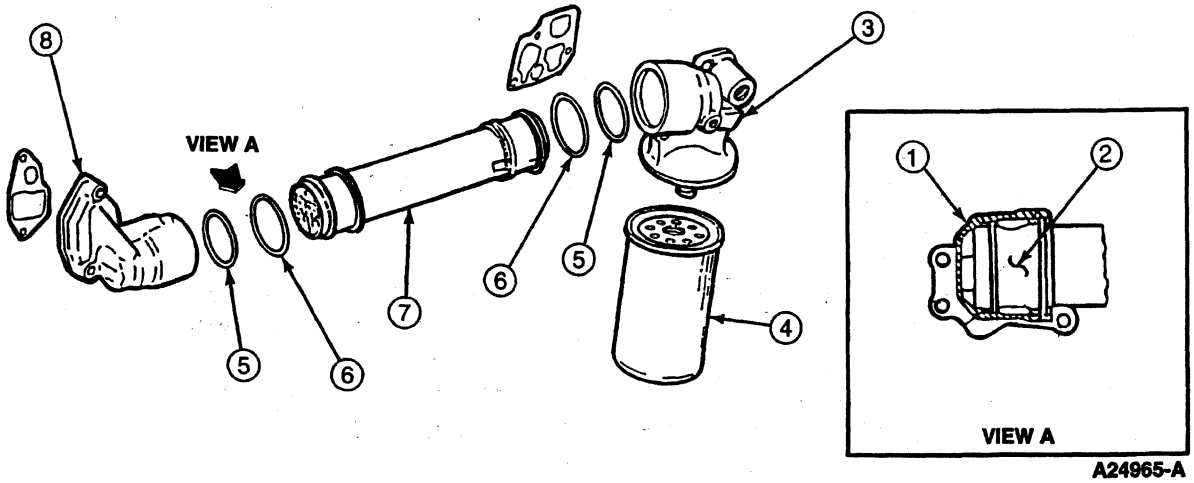

A24965-A

Item	Part Number	Description
1	—	Coolant Galley (Part of 6881)
2	—	Oil Flow Galley (Part of 6881)
3	6881	Oil Filter Header

(Continued)

Item	Part Number	Description
4	6731	Oil Filter
5	6C610	Inner O-Ring
6	6K649	Outer O-Ring
7	6A642	Oil Cooler
8	6881	Front Header

8. Inspect for coolant leaks at the oil pan plug bore.
9. If no leaks are found, remove oil pan and inspect crankcase for pressure leaks.
10. Inspect cylinder head (6049) for coolant leaks.

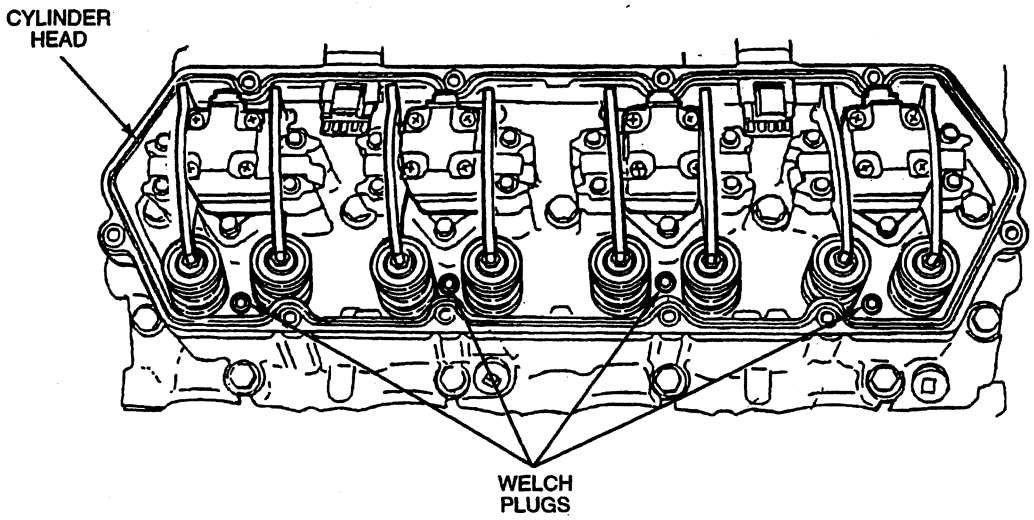

A24966-A

CLEANING AND INSPECTION (Continued)

11. If coolant leak still hasn't been found, remove the engine front cover (6019). Refer to Section 03-01C. Inspect gaskets and sealing surfaces.

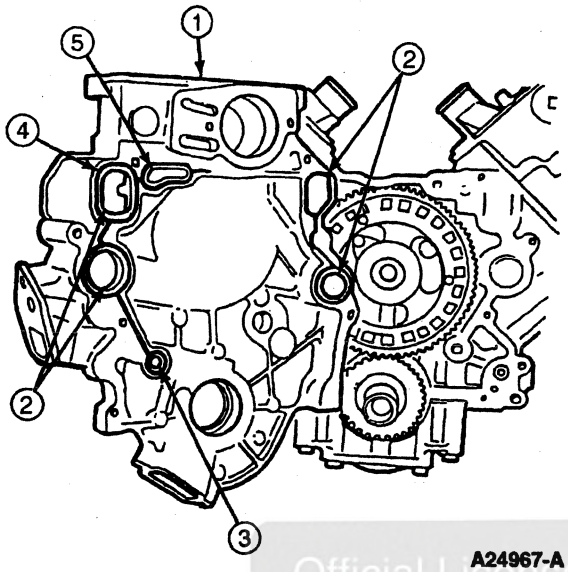

A24967-A

Item	Part Number	Description
1	6019	Engine Front Cover
2	—	Water Galleys (Part of 6019)
3	—	Oil Outlet Galley (Part of 6019)
4	6020	Front Cover Gasket
5	—	Oil Inlet Galley (Part of 6019)

12. Repair as required, retest for leaks.

Fuel in Coolant Leak

Inspection

1. Plug in block heater (6A051) to warm coolant.
2. Remove fuel return hose (9D308) from fuel pressure regulator.
3. Remove pressure relief cap and install Rotunda Cooling System Pressurization Kit 021-00012 or equivalent. Refer to Pressure Test in the Diagnosis and Testing portion of this section.
4. Pressurize cooling system to 96.5 kPa (14 psi).
5. Inspect fuel return hose for fuel or air discharge. The fuel return line that shows evidence of fuel or air discharge indicates which injector bank has a leak.
6. Remove fuel injector nozzle tip (9E527) from suspect bank. Refer to Section 03-04D.
7. With the cooling system pressurized, observe upper injector sleeve to cylinder head fit for evidence of leakage.

8. If leakage is detected, repair as required. Retest for leaks.

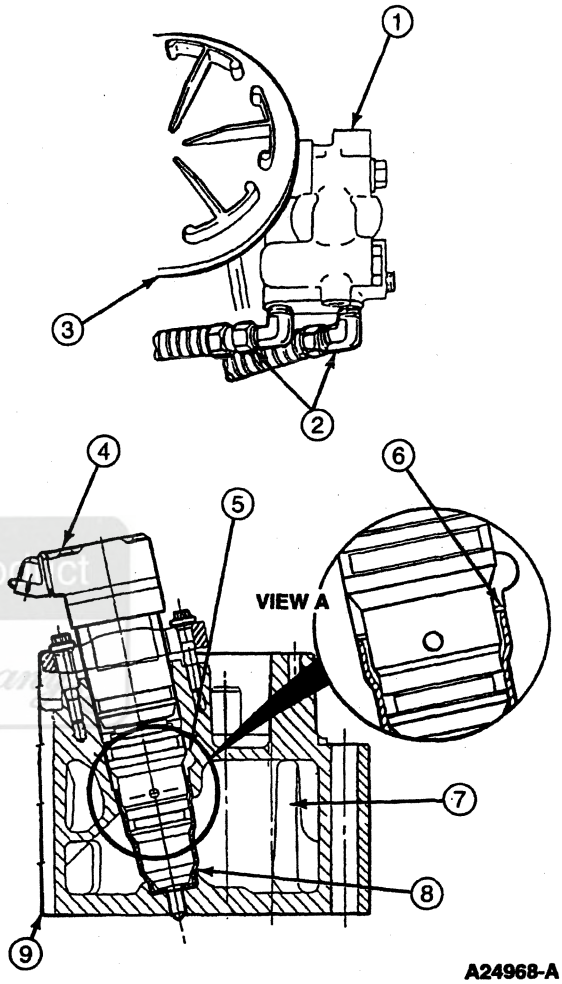

A24968-A

Item	Part Number	Description
1	9C968	Fuel Pressure Regulator (Part of 9155)
2	9D308	Fuel Return Lines
3	9155	Fuel Filter, Heater, Separator
4	9E527	Fuel Injector
5	—	Fuel Galley (Part of 6049)
6	—	Leak Point (Injector Sleeve to Cylinder Head)
7	—	Coolant Galley (Part of 6049)
8	—	Injector Sleeve (Part of 6049)
9	6049	Cylinder Head

Official Licensed Product Ford Motor Company

SPECIFICATIONS

COOLING SYSTEM REFILL CAPACITIES

Engine	Vehicle	Equipment	Approximate Capacity		
			Liters	U.S. Quarts	Imperial Quarts
5.8L (351 CID) V-8	F-250	Manual Trans. — Standard	14	15	12
5.8L (351 CID) V-8	F-250	Auto. Trans. — Standard or A/C, Manual Trans. with A/C	15	16	13
5.8L (351 CID) V-8	F-250	Manual and Auto. Trans. with Super Cool or Super Cool and A/C	16	17	14
7.5L (460 CID) V-8	F-250, F-350, F-Super Duty Chassis Cab and Motor Home Chassis Vehicles	All Options	18	18	15
7.3L Diesel	F-250, F-350 and F-Super Duty Chassis Cab	All Options	21[a]	23[a]	18[a]

a Include 1.5 U.S. quarts of supplement coolant additive (FW15 or equivalent).

COOLING SYSTEM PRESSURE SPECIFICATIONS

Vehicle	Operating Pressure	Min. Test Pressure
5.8L	90 kPa (13 psi)	69 kPa (10 psi)
7.3L	110 kPa (16 psi)	97 kPa (14 psi)

Official Licensed Product
Ford Motor Company

Cooling System Part Numbers/Application Chart

Refer to Master Parts List for service part numbers and applications.

Coolant Mixture

Service refill recommendations are 50/50 mixture of water and permanent coolant/antifreeze such as Ford Premium Cooling System Fluid E2FZ-19549-AA or B or equivalent meeting specification ESE-M97B44-A plus 1.41 (1.5 qts) of Heavy Duty Cooling System Additive FW-15 or equivalent meeting Ford specification ESN-M99B169-A.

Minimum acceptable coolant/water concentration is 45 percent antifreeze to 55 percent water. Maximum acceptable is 60 percent coolant to 40 percent water. Use only a hand-held refractometer such as Rotunda Battery/Antifreeze Tester 014-R1060 or equivalent to check concentration.

In an emergency, ordinary tap water with a low alkali content can be used provided the system is drained and flushed and filled with the specified coolant/water mixture as soon as possible. Use only if temperature is above 0°C (32°F).

NOTE: 7.3L diesel engines require a supplemental coolant additive to provide corrosion protection consistent with diesel engine characteristics. Without the supplemental additive, Motorcraft FW-15 or equivalent, cylinder wall erosion can occur.

The recommended quantity of coolant additive when refilling the entire cooling system is 1.4 liters (1-1/2 quarts). Refreshing the coolant mixture with an additional 237 ml (8 oz) of Motorcraft FW-15, or equivalent, each 15,000 miles (24,000 km) or 12 months is recommended.

WATER THERMOSTAT OPENING TEMPERATURE

Engine	Start to Open °C (°F)	Fully Open °C (°F)
7.3L Diesel	104 (205)	122 (220)

SPECIFICATIONS (Continued)

FAN CLUTCH SPECIFICATIONS

Engine	Vehicle	Equipment	Water Pump Pulley Ratio	Engine rpm Required to Run Water Pump at 3000 rpm	Water Pump Fan Test Speed		Water Pump Test Speed
					Minimum Fan rpm at Disengagement Temperature	Minimum Fan rpm at Engaged Temperature	
7.5L (460 CID) V-8	F-250, F-350 and F-Super Duty	with A/C	1.25	2400	1900 @ 141°F	2600 @ 211°F	3000
7.5L (460 CID) V-8	F-250, F-350 and F-Super Duty	Without A/C	1.25	2400	1900 @ 125°F	2600 @ 195°F	3000
7.3L Diesel	F-250, F-350 and F-Super Duty Chassis Cab	All Options	1.1	3000	650 @ 122°F	2900 @ 200°F	3300

TORQUE SPECIFICATIONS

Description	N·m	Lb-Ft	Lb-In
Water Hose Connection, All Engines Except 7.5L	16-24	12-18	—
Water Hose Connection, 7.5L	32-37	24-27	—
Block Heater Retaining Bolt	1.6-1.8	—	14-16
Fan Shroud to Radiator, F-250, F-350	5-7	44-62	—
Fan Shroud to Radiator, F-Super Duty Motorhome	6-8	—	53-71
Fan Clutch Assembly to Water Pump, All V-8 Engine Except 7.3L	16-24	12-18	—
Fan Clutch Assembly to Water Pump, 7.3L Diesel	113-153	84-112	—
Water Temperature Indicator Sender Unit	11-24	8-18	—
Bypass Hose Clamps, 5.8L	3-4	27-35	—
Bypass Hose Clamps, 7.5L	1.3-2.2	12-20	—
Transmission Oil Line Nut to Fitting on Radiator	16-24	12-18	—
Oil Cooler Line Clamps	4-5	—	35-44
Radiator Drain Cock Stem to Radiator Drain Cock	0.7-1.4	—	6-12
Water Hose Connection 7.3L Diesel	20	15	—
Fan to Fan Clutch, 7.3L Diesel	16-24	12-18	—
Engine Block Heater Cable to Frame Bolt	7-9	—	62-80

SPECIAL SERVICE TOOLS/EQUIPMENT

SPECIAL SERVICE TOOLS REQUIRED

Tool Number/ Description	Illustration
T84T-6312-C Fan Clutch Holding Tool	T84T-6312-C
T85T-18539-AH Heater Hose Disconnect Tool	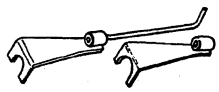 T85T-18539- AH
T93T-6312-B Fan Clutch Nut Wrench	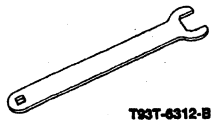 T93T-6312-B
T94T-6312-AH Fan Clutch Pulley Holder	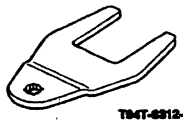 T94T-6312-AH

ROTUNDA EQUIPMENT

Model	Description
014-R1060	Battery/Antifreeze Tester
014-R1072	Radiator Pressure Tester
105-R0051	73 Digital Multimeter
164-R3658	Cooling System Flusher

Official Licensed Product Ford Motor Company

SECTION 03-04A Fuel Charging and Controls, 5.8L Engine

SUBJECT	PAGE
VEHICLE APPLICATION	03-04A-1
DESCRIPTION AND OPERATION	
A/C Compressor Clutch Control Relay	03-04A-6
Air Induction System	03-04A-3
Fuel Charging Wiring	03-04A-5
Fuel Injection Supply Manifold	03-04A-5
Fuel Injection Timing	03-04A-2
Fuel Injectors	03-04A-4
Fuel Pressure Regulator	03-04A-5
Fuel Pressure Relief Valve	03-04A-5
Fuel Pump Relay	03-04A-6
Fuel System	03-04A-1
Inertia Fuel Shutoff (IFS) Switch	03-04A-5
Intake Manifold	03-04A-4
Throttle Body	03-04A-3
DIAGNOSIS AND TESTING	
Fuel Charging and Controls	03-04A-6
REMOVAL AND INSTALLATION	
Fuel Charging System	03-04A-7
REMOVAL AND INSTALLATION (Cont'd.)	
Fuel Pressure Relief	03-04A-7
Post-Service Procedures	03-04A-7
Pre-Service Procedures	03-04A-7
Fuel Charging Wiring	03-04A-13
Fuel Injection Supply Manifold	03-04A-11
Fuel Injectors	03-04A-10
Fuel Pressure Regulator	03-04A-13
Fuel Pressure Relief Valve	03-04A-11
Fuel Pump Relay	03-04A-13
Spring Lock Coupling	03-04A-7
Throttle Body	03-04A-8
CLEANING AND INSPECTION	
Throttle Body	03-04A-13
ADJUSTMENTS	
Idle Speed	03-04A-14
SPECIFICATIONS	03-04A-14
SPECIAL SERVICE TOOLS/EQUIPMENT	03-04A-14

Official Licensed Product Ford Motor Company

VEHICLE APPLICATION

F-Series Equipped with 5.8L SFI V-8 Engine

DESCRIPTION AND OPERATION

Fuel System

WARNING: DO NOT SMOKE OR CARRY LIGHTED SUBSTANCES OR OPEN FLAME OF ANY TYPE WHEN WORKING ON OR NEAR ANY FUEL-RELATED COMPONENT. HIGHLY FLAMMABLE MIXTURES ARE ALWAYS PRESENT AND CAN BE IGNITED, RESULTING IN POSSIBLE PERSONAL INJURY.

A powertrain control module (PCM)(12A650) accepts input from various engine sensors to compute the required fuel flow rate necessary to maintain a prescribed air/fuel ratio throughout the entire engine (6007) operational range. The powertrain control module then outputs a command to the fuel injectors (9F593) to meter the appropriate quantity of fuel.

The system will automatically sense and compensate for changes in altitude (i.e., from sea level to mountainous regions) and will also permit push-starting the vehicle should it become necessary (manual transmission only).

The fuel delivery subsystem consists of a high-pressure in-tank mounted fuel pump (9350) and a fuel filter/reservoir delivering fuel from the fuel tank (9002) through a 20-micron fuel filter (9155) to a fuel injection supply manifold (9F792).

The fuel injection supply manifold incorporates electrically actuated fuel injectors mounted directly above each of the engine's intake ports. The fuel injectors, when energized, spray a metered quantity of fuel into the intake air stream.

A constant fuel pressure drop is maintained across the fuel injectors by a fuel pressure regulator (9C968). The fuel pressure regulator is connected in series with the fuel injectors and is positioned downstream from them. Excess fuel, supplied by the fuel pump but not required by the engine, passes through the fuel pressure regulator and returns to the fuel tank through a fuel return tube.

The SFI system is controlled by the powertrain control module. If at any time, the powertrain control module malfunctions, or the battery voltage drops to an abnormal level, fuel injection will occur for all cylinders simultaneously once every two revolutions of the crankshaft.

The SFI system works in conjunction with the engine control system. This engine control system consists of the powertrain control module, various sensors, and switches. These sensors and switches send input signals to the powertrain control module. Based upon these input signals, the powertrain control module controls the timing and duration (pulse width) of each injection.

DESCRIPTION AND OPERATION (Continued)

Fuel Injection Timing

- Each fuel injector (9F593) is energized once every other crankshaft revolution in sequence with engine firing order.
- The period of time that the fuel injectors are energized (injector "on time" or pulse width) is controlled by the vehicle's powertrain control module (PCM)(12A650).
- Air entering the engine (6007) is monitored by mass airflow, pressure and temperature sensors.
- The outputs of the electronic engine control sensors are processed by the powertrain control module.
- The powertrain control module determines the needed fuel injector pulse width and outputs a command to the fuel injectors to meter the exact quantity of fuel.

Electronic Fuel Injection, 5.8L SFI Engine

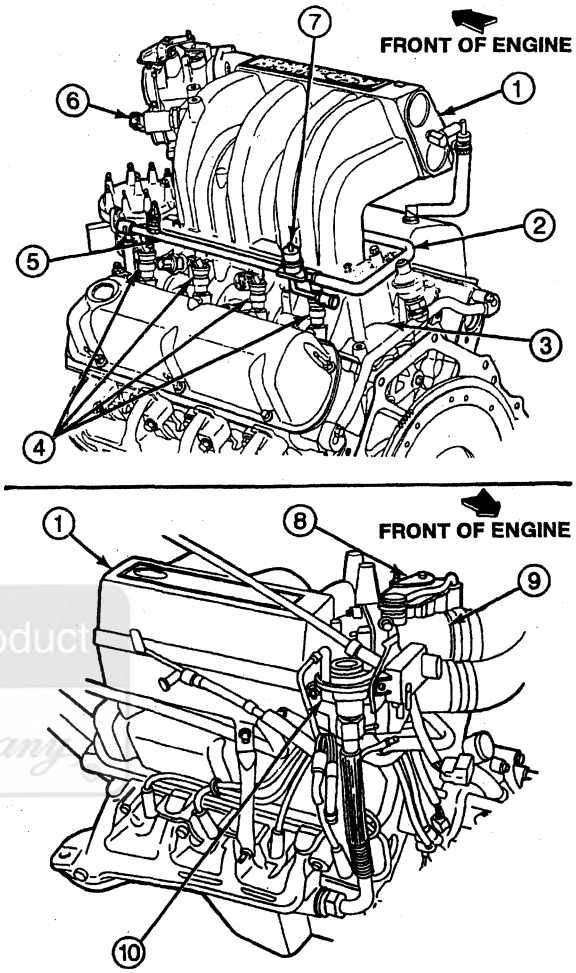

A8723-G

Item	Part Number	Description
1	9424	Intake Manifold (Upper)
2	—	Crossover Tube (Part of 9D280)
3	9424	Intake Manifold (Lower)
4	9F593	Fuel Injector
5	9F792	Fuel Injection Supply Manifold
6	9F715	Idle Air Control Valve
7	9C968	Fuel Pressure Regulator
8	—	Throttle Linkage (Part of 9E926)
9	9E926	Throttle Body
10	9F483	EGR Valve

Official Licensed Product
Ford Motor Company

DESCRIPTION AND OPERATION (Continued)

Sequential Multiport Fuel Injection (SFI)

The sequential multiport fuel injection system is classified as a multi-point pulse time, mass airflow controlled fuel injection system. Fuel is metered into each intake port in a sequential firing order. Fuel injectors pulse to follow engine firing order in accordance with engine demand through fuel injector nozzle tips mounted on a tuned intake manifold (9424).

Air Induction System

The air induction system supplies filtered air to the engine (6007) to mix with the fuel for combustion purposes. The air induction system consists of an engine air cleaner intake tube and duct (9A673), air cleaner assembly with filter, air cleaner outlet tube (9B659), mass air flow sensor (MAF sensor)(12B579), throttle body inlet tube, throttle body (9E926) and intake plenum.

Throttle Body

The throttle body (9E926) controls airflow to the engine (6007) through a double butterfly-type valve. The throttle position is controlled by a multiple-link, progressive opening throttle linkage. The throttle body is a single-piece die casting made of aluminum. It has a dual bore with an air bypass channel around the throttle plate. This bypass channel controls both cold and warm engine idle airflow as regulated by an idle air control valve (IAC valve)(9F715) mounted directly to the throttle body. The idle air control valve is an electromechanical device, controlled by the powertrain control module (PCM)(12A650) that meters the amount of air bypassed around the throttle plates in order to control engine idle speed. Engine coolant is diverted through the throttle body mounting pad to improve cold weather operation.

Other features of the throttle body include:

1. A fixed stop to locate the wide-open throttle (WOT) position.
2. A throttle body-mounted throttle position sensor (TP sensor)(9B989).
3. A sealant / coating that is applied to the downstream side of the throttle body plate and bore to minimize closed plate to bore airflow. This sealant / coating should **not** be removed or cleaned.

Upper Intake Manifold and Throttle Body Assemblies

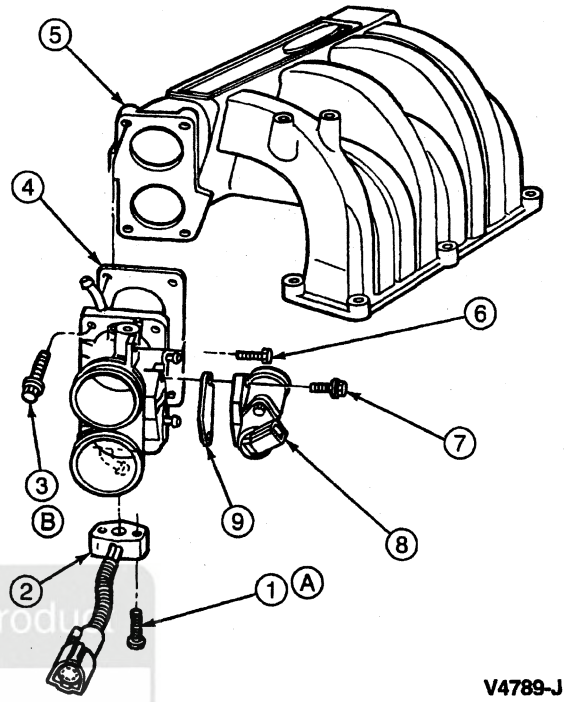

V4789-J

Item	Part Number	Description
1	N803469-S100	Screw and Washer Assy (2 Req'd)
2	9B989	Throttle Position Sensor
3	56524-S8	Bolt, 5 / 16-18 x 1.5 (4 Req'd)
4	9E936	Throttle Body Gasket
5	9424	Intake Manifold, Upper
6	391252-S2	Screw
7	N605733-S100	Bolt, M6 x 20
8	9F715	Idle Air Control Valve
9	9F670	IAC Valve Gasket
A	—	Tighten to 1-2 N·m (9-18 Lb-In)
B	—	Tighten to 16-24 N·m (12-18 Lb-Ft)

DESCRIPTION AND OPERATION (Continued)

Throttle Body

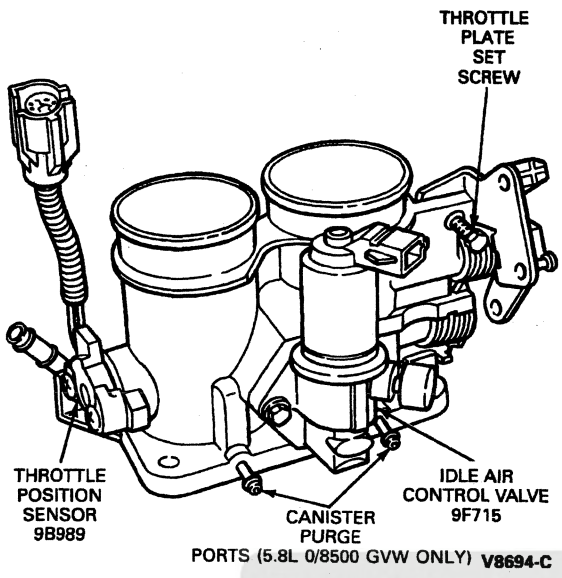

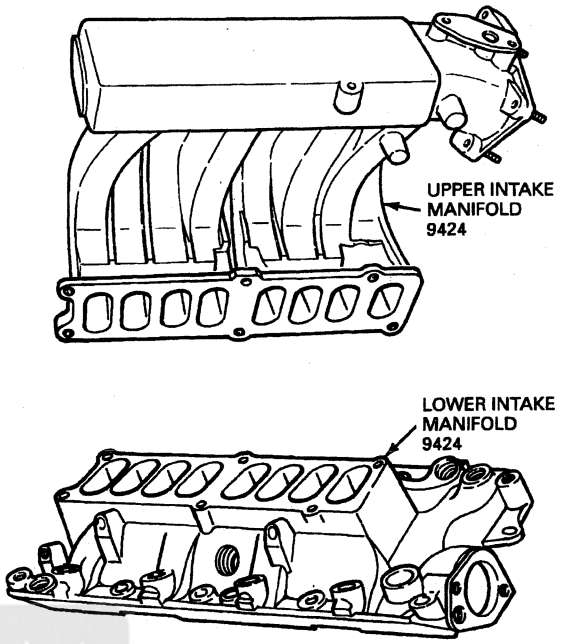

Intake Manifold

The intake manifold (9424) is a two-piece (upper and lower) aluminum casting. Runner lengths are tuned to optimize engine torque and power output. The intake manifold provides mounting flanges for the throttle body (9E926), fuel injection supply manifold (9F792) and accelerator control bracketry, and the EGR valve and supply tube. Vacuum taps are provided to support various engine accessories. Pockets for the fuel injectors (9F593) are machined to prevent both air and fuel leakage. The pockets in which the fuel injectors are mounted are placed to direct the injector fuel spray immediately in front of each engine intake valve (6507).

Fuel Injectors

The eight fuel injectors (9F593) are electromechanical devices that meter and atomize fuel delivered to the engine (6007). The multiport fuel injectors are mounted in the lower intake manifold (9424) and are positioned to direct fuel just ahead of the engine intake valves (6507). The fuel injector consists of a solenoid and valve assembly. An electrical control signal from the powertrain control module (PCM)(12A650) activates the injector solenoid, causing the needle to move inward off the seat, allowing fuel to flow. Since the injector flow orifice is fixed and the fuel pressure drop across the fuel injector is constant, fuel flow to the engine is regulated by how long the solenoid is energized. Atomization is obtained by a director metering plate at the point where the fuel separates.

All vehicles equipped with 5.8L SFI engines have deposit-resistant injectors (DRI) installed. This fuel injector is designed to eliminate the lean fuel delivery concerns which occur with conventional multiport fuel injectors when low grade, nondetergent fuels are used.

Official Licensed Product
Ford Motor Company

DESCRIPTION AND OPERATION (Continued)

Fuel Injection Supply Manifold

The fuel injection supply manifold (9F792) delivers high pressure fuel from the vehicle fuel supply tube to the eight fuel injectors (9F593). The assembly consists of two banks of tubular fuel injection supply manifolds connected by two permanent crossover connections, eight injector connectors, a mounting flange to the fuel pressure regulator (9C968) and mounting attachments, which locate the fuel injection supply manifold and provide fuel injector retention. The fuel inlet and outlet connections have push-connect fittings. The unit is serviced as an assembly only.

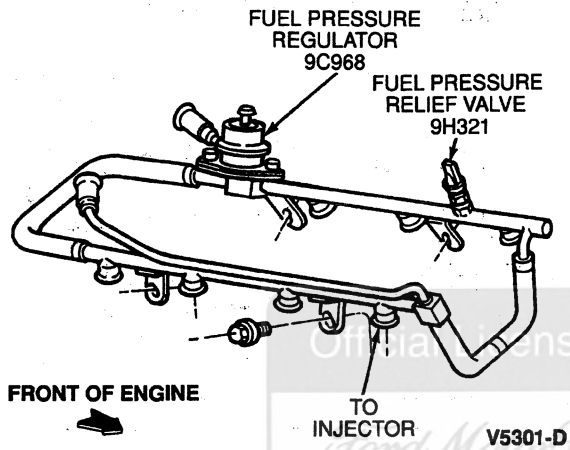

Fuel Pressure Regulator

The fuel pressure regulator (9C968) is attached to the fuel injection supply manifold (9F792) downstream of the fuel injectors (9F593). It regulates the fuel pressure supplied to the fuel injectors. The fuel pressure regulator is a diaphragm-operated relief valve in which one side of the diaphragm senses fuel pressure and the other side is subjected to intake manifold vacuum. The nominal fuel pressure is established by a spring preload applied to the diaphragm. Balancing one side of the diaphragm with manifold pressure maintains a constant fuel pressure drop across the fuel injectors. Fuel in excess of that used by the engine (6007) is bypassed through the fuel pressure regulator and returns to the fuel tank (9002).

Fuel Pressure Relief Valve

The fuel pressure relief valve (9H321) is used to relieve fuel pressure from the fuel system. The fuel pressure relief valve is located on the fuel injection supply manifold (9F792).

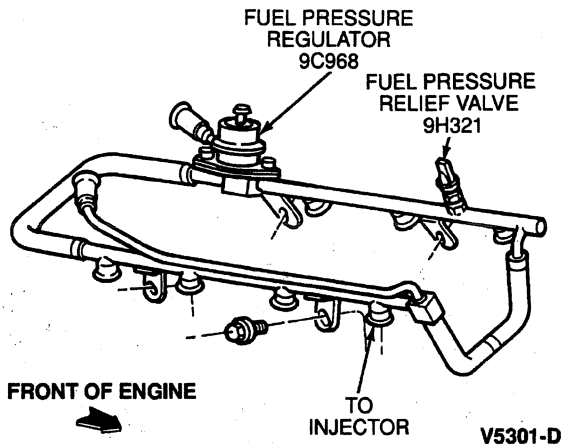

Fuel Charging Wiring

The fuel charging wiring (9D930) connects the engine wire harness to each fuel injector (9F593) and other electronic engine controls such as throttle position sensor (TP sensor)(9B989) and idle air control valve (IAC valve)(9F715). The fuel charging wiring receives fuel injector actuation signals from the powertrain control module (PCM)(12A650) and transfers the signals to the fuel injectors. The signals from the powertrain control module determine the fuel injection sequence and duration each fuel injector will stay open to allow fuel into the combustion chambers.

Inertia Fuel Shutoff (IFS) Switch

The inertia fuel shutoff switch (IFS switch)(9341) is used in conjunction with an electric fuel pump. The purpose of the inertia fuel shutoff switch is to shut off the fuel pump (9350) in the event of a collision. It consists of a steel ball held in place by a magnet. When a sharp impact occurs, the ball breaks loose from the magnet, rolls up a ramp and strikes a target plate which opens the electrical contacts of the inertia fuel shutoff switch and shuts off the fuel pump. Once the inertia fuel shutoff switch is open, it must be manually reset before restarting the vehicle.

The inertia fuel shutoff switch is located behind the RH cowl side trim panel.

Official Licensed Ford Motor Company

DESCRIPTION AND OPERATION (Continued)

Inertia Fuel Shutoff Switch

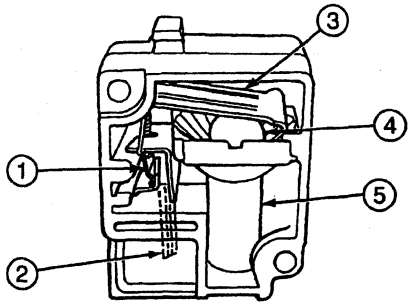

CUTAWAY VIEW

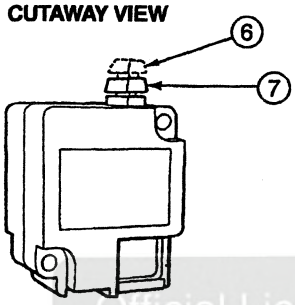

EXTERNAL VIEW A23669-A

Item	Part Number	Description
1	—	Electrical Contacts (Part of 9341)
2	—	Switch Terminals (Part of 9341)
3	—	Target Plate (Part of 9341)
4	—	Ball (Part of 9341)
5	—	Magnet (Part of 9341)
6	—	Reset Button Position for Open Switch (Part of 9341)
7	—	Closed Switch (Part of 9341)

(Continued)

Fuel Pump Relay

The fuel pump relay supplies power to the fuel pump (9350) when the powertrain control module (PCM)(12A650) grounds the relay during START and engine RUN conditions.

A/C Compressor Clutch Control Relay

The A/C compressor clutch control relay is used to improve idle smoothness after engine start-up and to improve acceleration performance. The A/C is interrupted for approximately 5 seconds just after the engine (6007) is started.

DIAGNOSIS AND TESTING

Fuel Charging and Controls

Refer to the 1996 Powertrain Control/Emissions Diagnosis Manual.[1]

1 Can be purchased as a separate item.

Official Licensed Product Ford Motor Company

REMOVAL AND INSTALLATION

Fuel Charging System

Pre-Service Procedures

The fuel charging assembly consists of the throttle body (9E926), and the upper and lower intake manifolds (9424). Prior to service or removal of the fuel charging assembly, the following steps must be taken.

1. Disconnect battery ground cable (14301) and secure it out of the way. Remove the fuel supply manifold shield (9J314).
2. Remove engine air cleaner intake tube and duct (9A673) from air cleaner to throttle body.
3. Remove fuel tank filler cap (9030) to relieve tank pressure.
4. Relieve pressure from fuel system at fuel pressure relief valve (9H321) (Schrader) on fuel injection supply manifold (9F792) as described in the following procedure.

Fuel Pressure Relief

WARNING: FUEL SUPPLY TUBES WILL REMAIN PRESSURIZED FOR LONG PERIODS OF TIME AFTER ENGINE SHUTDOWN. THIS PRESSURE MUST BE RELIEVED BEFORE SERVICING OF THE FUEL SYSTEM IS BEGUN. A VALVE IS PROVIDED ON THE FUEL INJECTION SUPPLY MANIFOLD FOR THIS PURPOSE.

SPECIAL SERVICE TOOL(S) REQUIRED

Description	Tool Number
Multiport Fuel Injection (MFI) Fuel Pressure Gauge (EFI/CFI)	T80L-9974-B

1. Remove the protective cap from the fuel pressure relief valve.
2. Connect Multiport Fuel Injection (MFI) Fuel Pressure Gauge (EFI/CFI) T80L-9974-B to the fuel pressure relief valve on the fuel injection supply manifold.
3. Place end of the adapter hose in a suitable container.
4. Open the manual valve on the Multiport Fuel Injection (MFI) Fuel Pressure Gauge (EFI/CFI) T80L-9974-B to relieve fuel system pressure.
5. Close the manual valve and disconnect the tool from the fuel pressure relief valve. Remove container.
6. Install the protective cap on the fuel pressure relief valve.

Post-Service Procedures

After the service is complete and the fuel charging assembly is installed onto engine (6007), the following steps must be taken:

1. Install engine air cleaner intake tube and duct to throttle body.
2. Install the fuel tank filler cap.
3. NOTE: When the battery (10655) has been disconnected and reconnected, some abnormal drive symptoms may occur while the powertrain control module (PCM)(12A650) relearns its adaptive strategy. The vehicle may need to be driven 16 km (10 miles) or more to relearn the strategy.

   Connect battery ground cable.
4. **CAUTION: The fuel system is normally pressurized to 275 kPa (40 psi).**

   NOTE: Check all connections at fuel injection supply manifold, push-connect fittings, fuel injectors (9F593), etc.

   Turn ignition switch (11572) on and off several times without starting engine to pressurize the fuel system. Check for fuel leaks at fuel pressure regulator (9C968), fuel injectors and fuel connect fittings.
5. Start engine and warm to operating temperature. Check for coolant leak if coolant was removed. Refer to Section 03-03.
6. Perform EEC self test to check system's function. Refer to the 1996 Powertrain Control/Emissions Diagnosis Manual.[2] Recheck for fuel leaks.

Spring Lock Coupling

SPECIAL SERVICE TOOL(S) REQUIRED

Description	Tool Number
Spring Lock Coupling Disconnect Tool	T81P-19623-G1
Spring Lock Coupling Disconnect Tool	T81P-19623-G2

The spring lock coupling is a fuel tube coupling held together by a garter spring inside a circular cage. When the coupling is connected, the flared end of the female fitting slips behind the garter spring inside the cage of the male fitting. The garter spring and cage then prevent the flared end of the female fitting from pulling out of the cage. As a redundant locking feature, a horseshoe-shaped retaining clip is incorporated to improve the retaining reliability of the spring lock coupling.

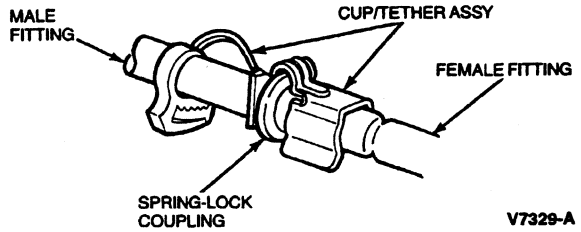

Removal

1. Perform Pre-Service procedures as described in Fuel Charging System in the Removal and Installation portion of this section.

2 Can be purchased as a separate item.

REMOVAL AND INSTALLATION (Continued)

2. Remove retaining clip from spring lock coupling by hand only. Do not use any sharp tool or screwdriver as it may damage the spring lock coupling.
3. Twist fitting to free it from any adhesion at the O-ring seals.
4. Using Spring Lock Coupling Disconnect Tool T81P-19623-G1 (3/8-Inch) or T81P-19623-G2 (1/2-Inch), disconnect fuel hoses at the fuel injection supply manifold supply tube and fuel injection supply manifold return tube.
   a. Fit tool to coupling so tool can enter cage to release garter spring.
   b. Push the tool into the cage opening to release female fitting from garter spring.
   c. Pull the coupling male and female fittings apart.
   d. Remove the tool from the disconnected coupling.

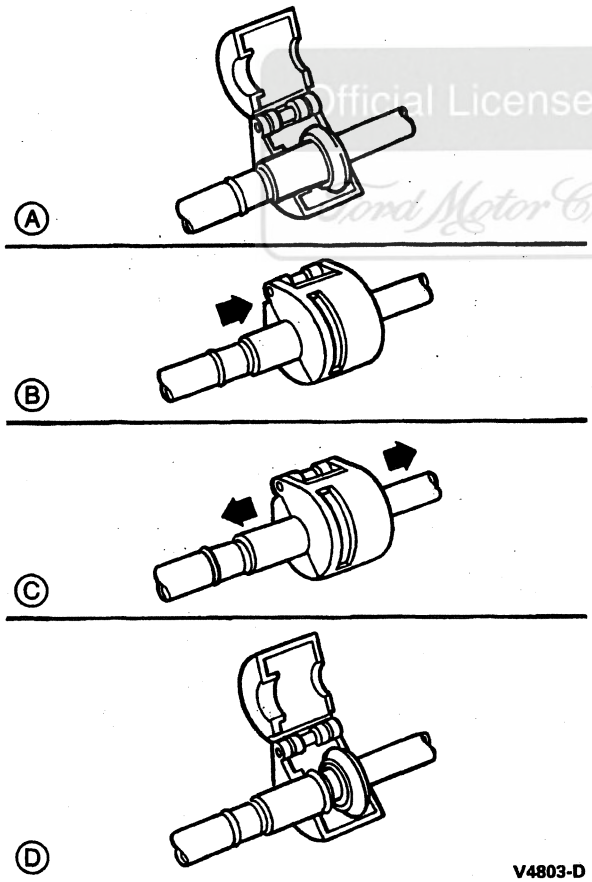

Installation

1. Make sure the garter spring is in cage of male fitting. If garter spring is missing, install a new spring by pushing it into cage opening. If garter spring is damaged, remove it from cage with a small wire hook (do not use a screwdriver) and install a new spring.
2. **WARNING: USE ONLY THE SPECIFIED O-RINGS AS THEY ARE MADE OF A SPECIAL MATERIAL. THE USE OF ANY O-RING OTHER THAN THE SPECIFIED O-RING MAY ALLOW THE CONNECTION TO LEAK INTERMITTENTLY DURING VEHICLE OPERATION.**

   Clean all dirt or foreign material from both pieces of coupling.
3. Replace missing or damaged O-rings.
4. Lubricate male fitting and O-rings and inside of female fitting with clean engine oil XO-10W30-QSP or equivalent meeting Ford specification ESE-M2C153-E.
5. Fit female fitting to male fitting and push until garter spring snaps over flared end of female fitting.
6. Check coupling engagement by pulling on fitting and visually checking to make sure garter spring is over flared end of female fitting.
7. NOTE: All vehicles require the large black clip to be installed on the supply side fuel tube and the small gray clip to be installed on the return side fuel tube.

   Position retaining clip over metal portion of spring lock coupling. Firmly push retaining clip onto spring lock coupling. Make sure horseshoe portion of clip is over the coupling. Do not install retaining clip over rubber fuel tube.
8. Perform Post-Service procedures as described in Fuel Charging System in the Removal and Installation portion of this section.

Throttle Body

Removal

1. Disconnect battery ground cable (14301).
2. Remove air cleaner outlet tube. Refer to Section 03-12.
3. NOTE: Some coolant will be lost when throttle body (9E926) is removed.

   Partially drain radiator (8005).
4. Remove accelerator control splash shield (9E766) from throttle body.
5. **CAUTION: When disconnecting throttle cable from ball stud, use a screwdriver or similar tool close to the stud and pry slowly. Pulling by hand may damage the cable.**

   Disconnect throttle linkage at throttle ball. Disconnect transmission linkage from throttle body.
6. Disconnect throttle position sensor and idle air control valve wiring connectors.
7. Remove engine coolant hose connectors and vacuum lines as necessary.
8. Remove bracket to expose upper left-hand throttle body mounting bolt.

Official Licensed Product Ford Motor Company

REMOVAL AND INSTALLATION (Continued)

9. Remove four throttle body bolts.

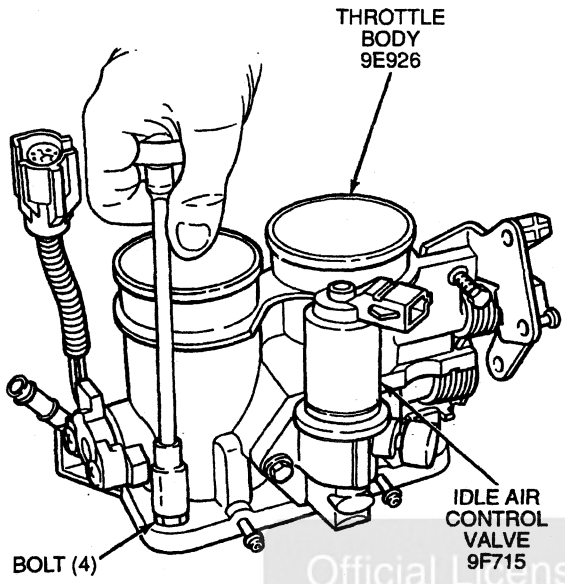

V4796-J

10. Carefully separate throttle body from upper intake manifold (9424).
11. Remove and discard gasket between throttle body and upper intake manifold.

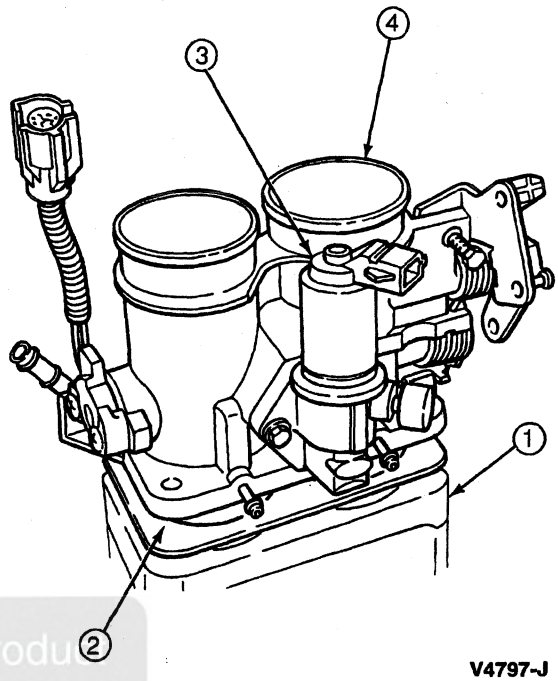

V4797-J

Item	Part Number	Description
1	9424	Intake Manifold, Upper
2	9E936	Throttle Body Gasket
3	9F715	Idle Air Control Valve
4	9E926	Throttle Body

Installation

1. NOTE: If scraping is necessary, be careful not to damage gasket surfaces of throttle body and intake manifolds, or allow gasket material to drop into intake manifold.

   Make sure that both throttle body and upper intake manifold gasket surfaces are clean.
2. Install a new throttle body gasket on the four studs of the upper intake manifold.
3. Install throttle body to upper intake manifold.
4. Secure throttle body to upper intake manifold with four retaining bolts. Tighten to 16-24 N·m (12-18 lb-ft).
5. Install bracket.
6. Reinstall engine coolant hoses and vacuum connections as necessary.
7. Connect air control valve and throttle position (TP) sensor electrical connectors.
8. Connect throttle cable and transmission linkage to throttle body.
9. Install accelerator control splash shield on the throttle body.
10. Replace coolant in the radiator as necessary.

Official Licensed Product
Ford Motor Company

REMOVAL AND INSTALLATION (Continued)

11. Install air cleaner outlet tube. Refer to Section 03-12.
12. NOTE: When the battery (10655) has been disconnected and reconnected, some abnormal drive symptoms may occur while the powertrain control module (PCM)(12A650) relearns its adaptive strategy. The vehicle may need to be driven 16 km (10 miles) or more to relearn the strategy.

    Reconnect battery ground cable.

Fuel Injectors

Removal

1. Perform Pre-Service procedures as described in Fuel Charging System in the Removal and Installation portion of this section.
2. Remove upper intake manifold (9424) as described in Section 03-01A, and fuel injection supply manifold (9F792) as described in Fuel Injection Supply Manifold in the Removal and Installation portion of this section.
3. Carefully remove electrical harness connectors from individual fuel injectors (9F593) as required.

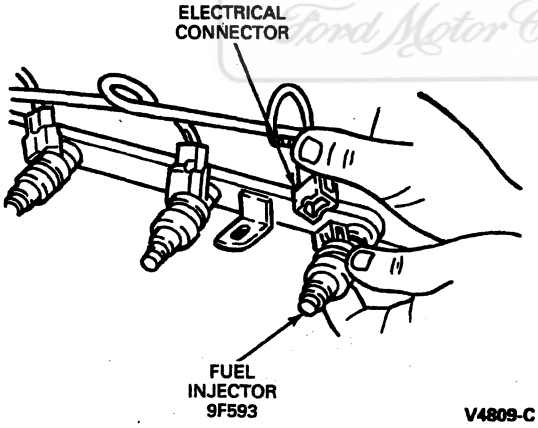

V4809-C

4. Grasping fuel injector body, pull up while gently rocking fuel injector from side to side.

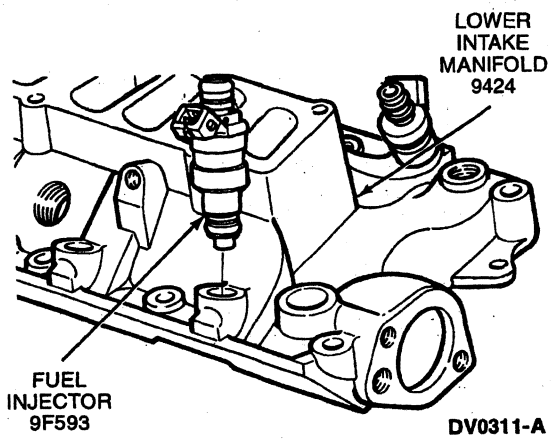

DV0311-A

5. **CAUTION: Do not attempt to clean the injector metering orifice with brushes.**

   NOTE: Deposit resistant injectors (DRI) do not need to be cleaned.

   Inspect fuel injector O-rings (two per injector) for signs of deterioration. Replace as required.

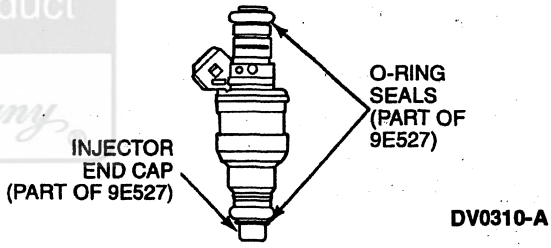

DV0310-A

Installation

1. **CAUTION: Never use silicone grease. It will clog the fuel injectors.**

   Lubricate new O-rings with light grade oil XO-10W30-QSP or equivalent oil meeting Ford specification ESE-M2C153-E and install two on each fuel injector.
2. Install fuel injectors using light, twisting, pushing motion.
3. Install fuel injection supply manifold as described in Fuel Injection Supply Manifold in the Removal and Installation portion of this section.
4. Install electrical harness connectors to fuel injectors.
5. Install upper intake manifold as described in Section 03-01A. Perform Post-Service procedures as described in Fuel Charging System in the Removal and Installation portion of this section.

Ford Motor Company

REMOVAL AND INSTALLATION (Continued)

Fuel Pressure Relief Valve

Removal

1. NOTE: Fuel pressure relief valve cap (9H323) on fuel pressure relief valve (9H321) must be removed.

   Perform Pre-Service procedures as described in Fuel Charging System in the Removal and Installation portion of this section.
2. Remove fuel pressure relief valve cap on fuel pressure relief valve.
3. Using an open-end wrench or suitable deep-well socket, remove fuel pressure relief valve.

Installation

1. Install fuel pressure relief valve and fuel pressure relief valve cap. Tighten fuel pressure relief valve to 7.75 N·m (69 lb-in) and the fuel pressure relief valve cap to 0.6 N·m (5.3 lb-in).
2. Perform Post-Service procedures as described in Fuel Charging System in the Removal and Installation portion of this section.

Fuel Injection Supply Manifold

SPECIAL SERVICE TOOL(S) REQUIRED

Description	Tool Number
Spring Lock Coupling Disconnect Tool	T81P-19623-G1
Spring Lock Coupling Disconnect Tool	T81P-19623-G2

Removal

1. Perform Pre-Service procedures as described in Fuel Charging System in the Removal and Installation portion of this section.
2. Remove upper intake manifold (9424). Refer to Section 03-01A.
3. Disconnect fuel supply and return tube retaining clips.
4. **WARNING: RELIEVE FUEL SYSTEM PRESSURE BEFORE DISCONNECTING COUPLING.**

   Using Spring Lock Coupling Disconnect Tool T81P-19623-G1 (3/8-Inch) or T81P-19623-G2 (1/2-Inch), disconnect the fuel chassis inlet and outlet fuel tubes from the fuel injection supply manifold (9F792) as follows:
   a. Fit tool to coupling so that tool can enter cage opening to release the garter spring.
   b. Push the tool into the cage opening to release the female fitting from the garter spring.
   c. Pull the coupling male and female fittings apart.
   d. Remove the tool from the disconnected coupling.

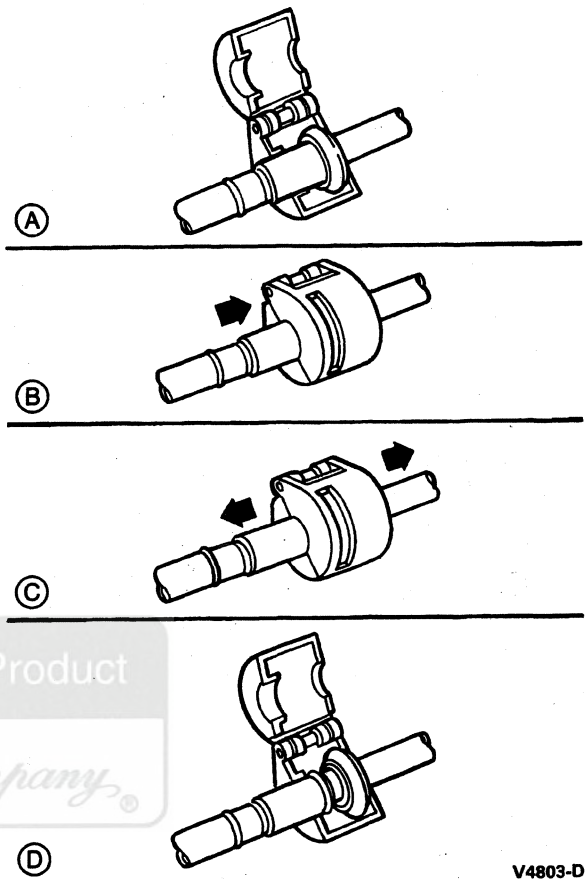

V4803-D

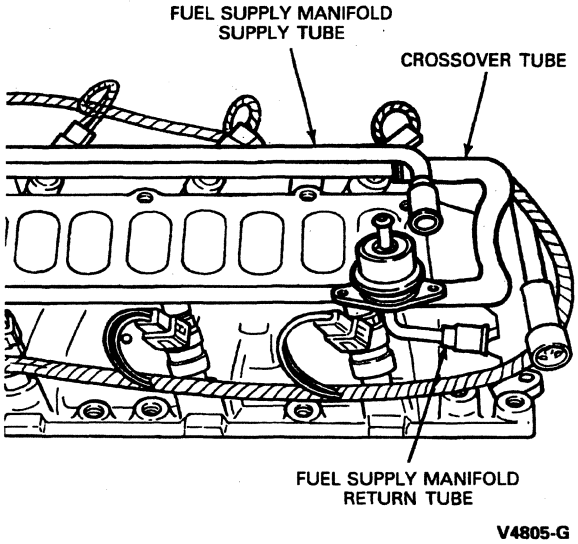

V4805-G

5. Remove vacuum tube from fuel pressure regulator (9C968).

Official Licensed Product Ford Motor Company

REMOVAL AND INSTALLATION (Continued)

6. Remove four (two per group) fuel injection supply manifold retaining bolts.

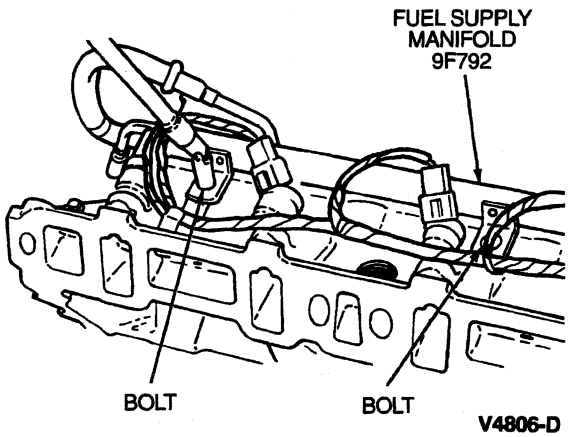

V4806-D

7. NOTE: Fuel injectors (9F593) will stay in fuel injection supply manifold when removed.
   Remove fuel injection supply manifold.

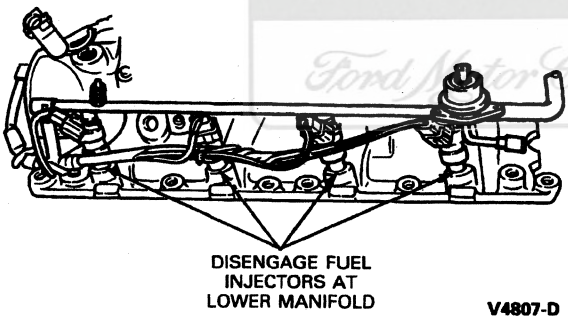

V4807-D

Installation

1. Make sure fuel injector end caps are clean and free of contamination.
2. Install fuel injectors into fuel injection supply manifold, then seat fuel injectors into pockets in lower intake manifold. Make sure the fuel injectors are properly seated.

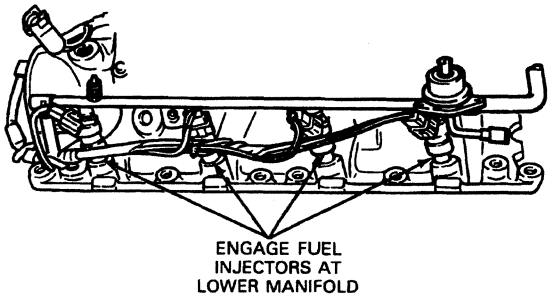

V4865-D

3. Secure the fuel injection supply manifold using four retaining bolts. Tighten to 8-12 N·m (70-105 lb-in).
4. Connect the fuel inlet and outlet tubes at the fuel injection supply manifold connections as follows:
   a. Check for missing or damaged garter spring, remove damaged spring with small hooked wire, and install new spring.
   b. Clean fittings with solvent. Check for missing or damaged O-rings. Replace missing O-rings. If either O-ring is damaged, replace both.
   c. Assemble fitting by pushing with a slight twisting motion.
   d. To check coupling engagement, pull on fitting and visually check to be sure garter spring is over flared end of female fitting.

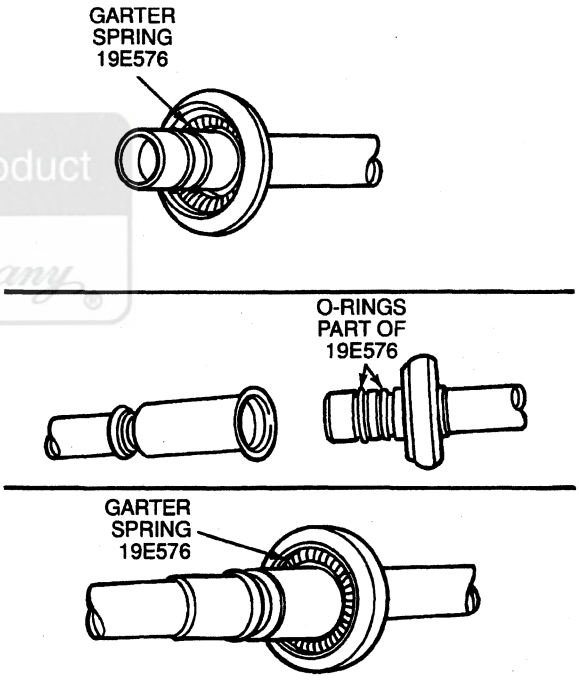

V5908-D

5. Install vacuum tube on fuel pressure regulator.
6. Connect fuel tube retaining clips.
7. Install upper intake manifold as described in Section 03-01A.
8. Perform Post-Service procedures as described in Fuel Charging System in the Removal and Installation portion of this section.

Official Licensed Product
Ford Motor Company

REMOVAL AND INSTALLATION (Continued)

Fuel Pressure Regulator

Removal

1. Perform Pre-Service procedures as described in Fuel Charging System in the Removal and Installation portion of this section.
2. Remove vacuum tube at fuel pressure regulator (9C968).
3. Remove two Allen head retaining screws from regulator housing.
4. Remove fuel pressure regulator, return seal and both O-rings. Discard return seal and inspect O-rings for signs of cracks or deterioration.
5. If scraping is necessary, be careful not to damage fuel pressure regulator or fuel supply line O-ring mating surfaces.

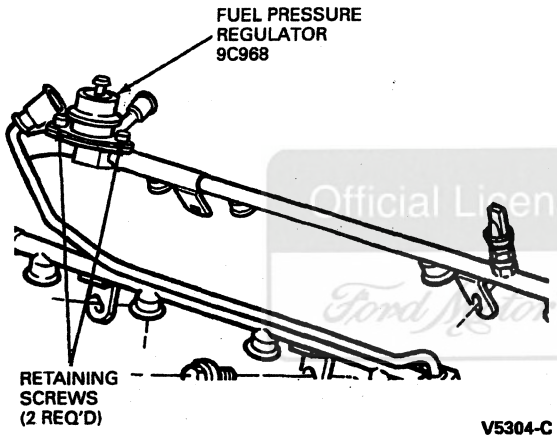

Installation

1. **CAUTION: Never use silicone grease. It will clog the fuel injectors.**

   Lubricate fuel pressure regulator O-ring with XO-10W30-QSP or equivalent oil meeting Ford specification ESE-M2C153-E.
2. Make sure O-ring surfaces of fuel pressure regulator and fuel injection supply manifold (9F792) are clean.
3. Install O-rings and new return seal on fuel pressure regulator.
4. Install fuel pressure regulator on fuel injection supply manifold. Tighten two retaining screws to 3-5 N·m (27-44 lb-in).
5. Install vacuum tube to fuel pressure regulator.
6. Perform Post-Service procedures as described in Fuel Charging System in the Removal and Installation portion of this section.

Fuel Charging Wiring

Removal

1. Remove upper intake manifold (9424) as described in Section 03-01A.
2. Disconnect fuel charging wiring (9D930) from fuel injector (9F593) and electronic engine controls.
3. Remove fuel charging wiring ground strap retainer nut and ground strap.
4. Disconnect fuel charging wiring from engine control sensor wiring.

Installation

1. Follow removal procedure in reverse order. Verify all connections.

Fuel Pump Relay

Removal

1. NOTE: When the battery (10655) has been disconnected and reconnected, some abnormal drive symptoms may occur while the powertrain control module (PCM)(12A650) relearns its adaptive strategy. The vehicle may need to be driven 16 km (10 miles) or more to relearn the strategy.

   Disconnect battery ground cable (14301).
2. Locate relay (14N089), in the engine compartment power distributor center, and remove relay.

Installation

1. Follow removal procedure in reverse order.

CLEANING AND INSPECTION

Throttle Body

NOTE: The throttle body (9E926) for this vehicle is a sludge-resistant design and should not be cleaned.

Official Licensed Product Ford Motor Company

ADJUSTMENTS

Idle Speed

Refer to 1996 Powertrain Control / Emissions Diagnosis Manual[3] for idle speed adjustment procedures.

SPECIFICATIONS

LUBRICANT / ADHESIVE / CLEANER SPECIFICATIONS

Description	Part Number	Ford Specification
Engine Oil	XO-10W30-QSP	ESE-M2C153-E

TORQUE SPECIFICATIONS

Description	N·m	Lb-Ft	Lb-In
Throttle Body to Upper Intake Manifold Bolts	16-24	12-18	—
Throttle Position (TP) Sensor to Throttle Body	1-2	—	9-18
Fuel Pressure Regulator to Fuel Injection Supply Manifold Screws	3-5	—	27-44
Fuel Injection Supply Manifold to Lower Intake Manifold Bolts	8-12	—	70-105
Fuel Pressure Relief Valve	7.75	—	69
Fuel Pressure Relief Valve Cap	0.6	—	5.3

Official Licensed Product Ford Motor Company

SPECIAL SERVICE TOOLS / EQUIPMENT

SPECIAL SERVICE TOOLS REQUIRED

Tool Number / Description	Illustration
T80L-9974-B Multiport Fuel Injection Fuel Pressure Gauge (EFI / CFI)	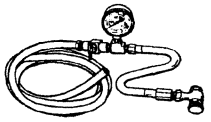 T80L-9974-B
T81P-19623-G1 Spring Lock Coupling Disconnect Tool (3/8-Inch)	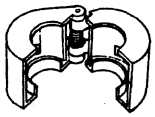 T81P-19623-G1
T81P-19623-G2 Spring Lock Coupling Disconnect Tool (1/2-Inch)	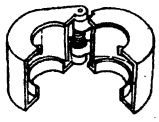 T81P-19623-G2

3 Can be purchased as a separate item.

SECTION 03-04B Fuel Charging and Controls, 7.5L Engine

SUBJECT	PAGE
VEHICLE APPLICATION	03-04B-1
DESCRIPTION AND OPERATION	
Air Induction System	03-04B-3
Fuel Charging Wiring	03-04B-5
Fuel Injection Supply Manifold	03-04B-4
Fuel Injection Timing	03-04B-2
Fuel Injectors	03-04B-4
Fuel Pressure Regulator	03-04B-5
Fuel Pressure Relief Valve	03-04B-5
Fuel Pump Relay	03-04B-6
Fuel System	03-04B-1
Inertia Fuel Shutoff (IFS) Switch	03-04B-5
Intake Manifold	03-04B-4
Simultaneous Multiport Fuel Injection (MFI)	03-04B-3
Throttle Body	03-04B-3
DIAGNOSIS AND TESTING	
Fuel Charging and Controls	03-04B-6
REMOVAL AND INSTALLATION	
Fuel Charging System	03-04B-7
Fuel Pressure Relief	03-04B-7
Post-Service Procedures	03-04B-7
Pre-Service Procedures	03-04B-7
Fuel Charging Wiring	03-04B-12
Fuel Injection Supply Manifold	03-04B-10
Fuel Injectors	03-04B-9
Fuel Pressure Regulator	03-04B-12
Fuel Pump Relay	03-04B-12
Spring Lock Coupling	03-04B-7
Throttle Body	03-04B-8
CLEANING AND INSPECTION	
Throttle Body	03-04B-12
ADJUSTMENTS	
Idle Speed	03-04B-13
SPECIFICATIONS	03-04B-13
SPECIAL SERVICE TOOLS/EQUIPMENT	03-04B-13

Official Licensed Product
Ford Motor Company

VEHICLE APPLICATION

F-250 Heavy Duty, F-350 and F-Super Duty

DESCRIPTION AND OPERATION

Fuel System

A powertrain control module (PCM)(12A650) accepts input from various engine sensors to compute the required fuel flow rate necessary to maintain a prescribed air / fuel ratio throughout the entire engine operational range. The computer then outputs a command to the fuel injectors (9F593) to meter the appropriate quantity of fuel.

The system will automatically sense and compensate for changes in altitude (i.e., from sea level to mountainous regions) and also permits push-starting the vehicle should it become necessary (manual transmission only).

The fuel delivery subsystem consists of a high-pressure in-tank mounted fuel pump (9350), and a fuel filter / reservoir delivering fuel from the fuel tank (9002) through a chassis-mounted 20-micron fuel filter to a fuel injection supply manifold (9F792).

The fuel injection supply manifold incorporates electrically-actuated fuel injectors directly above each of the engine's eight intake ports. The fuel injectors, when energized, spray a metered quantity of fuel into the intake air stream.

A constant fuel pressure drop is maintained across the fuel injectors by a fuel pressure regulator (9C968). The fuel pressure regulator is connected in series with the fuel injectors and is positioned downstream from them. Excess fuel supplied by the pump, but not required by the engine (6007), passes through the regulator reservoir input and returns to the fuel tank through a fuel return line.

DESCRIPTION AND OPERATION (Continued)

7.5L Simultaneous Multiport Fuel Injection (MFI) Engine

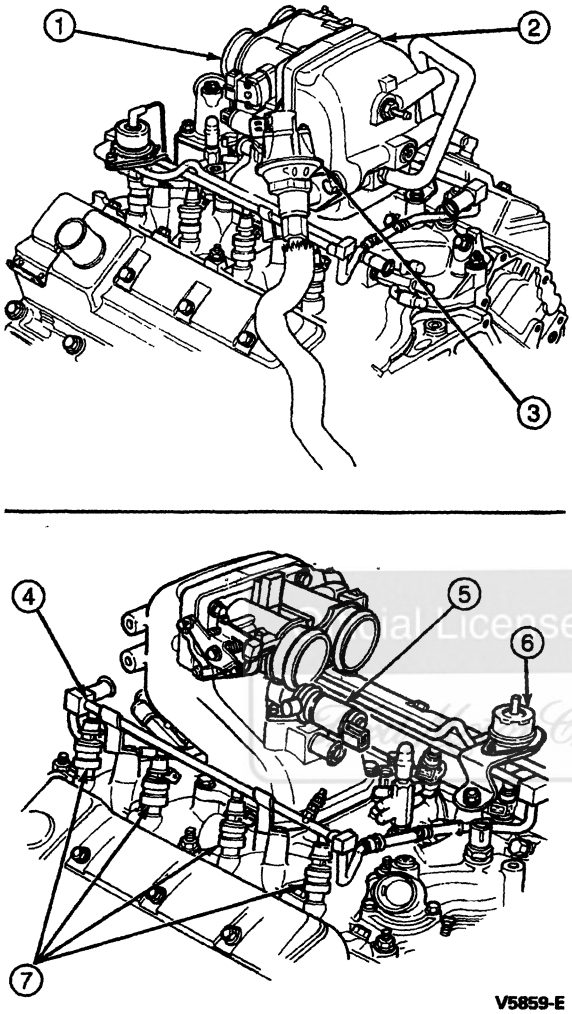

V5859-E

Item	Part Number	Description
1	9E926	Throttle Body
2	9424	Intake Manifold, Upper
3	9F483	EGR External Pressure Valve
4	9F792	Fuel Injection Supply Manifold
5	9F715	Idle Air Control Valve
6	9C968	Fuel Pressure Regulator
7	9F593	Fuel Injectors

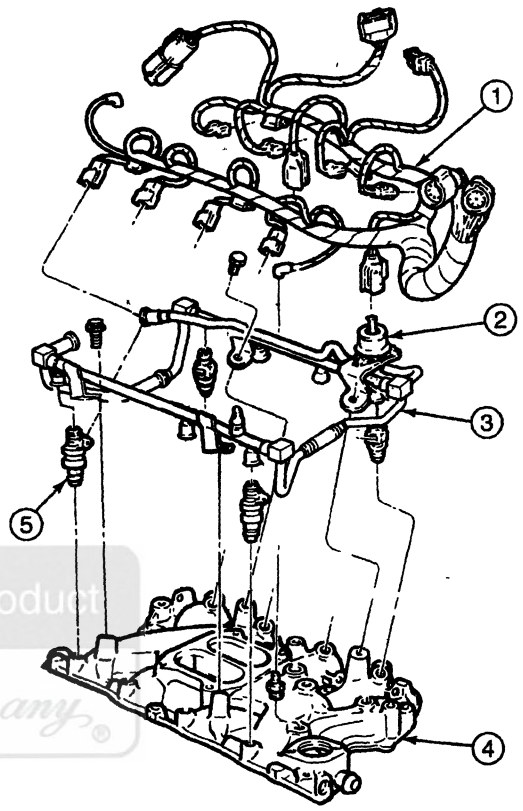

V5860-E

Item	Part Number	Description
1	9D930	Fuel Charging Wiring
2	9C968	Fuel Pressure Regulator
3	9F792	Fuel Injection Supply Manifold
4	9424	Intake Manifold, Lower
5	9F593	Fuel Injector

Fuel Injection Timing

Each fuel injector (9F593) is energized once every other crankshaft revolution in sequence with engine firing order. The period of time that the fuel injectors are energized (injector "on time" or pulse width) is controlled by the vehicle's powertrain control module (PCM)(12A650). Air entering the engine (6007) is monitored by flow, pressure and temperature sensors. The outputs of these electronic engine control sensors are processed by the powertrain control module. The powertrain control module determines the needed fuel injector pulse width and outputs a command to the fuel injector to meter the exact quantity of fuel.

DESCRIPTION AND OPERATION (Continued)

Simultaneous Multiport Fuel Injection (MFI)

The multiport fuel injection system (MFI) is classified as a multi-point, pulse time, speed density control fuel injection system. Fuel is metered into each intake port in a sequential firing order. Fuel injectors (9F593) pulse to follow engine firing order in accordance with engine demand through injectors mounted on a tuned intake manifold (9424).

Air Induction System

The air induction system supplies filtered air to the engine (6007) to mix with the fuel for combustion purposes. The air induction system consists of an engine air cleaner intake tube (9A624), engine air cleaner assembly with filter, air cleaner outlet tube (9B659), mass air flow sensor (MAF sensor)(12B579), throttle body (9E926) and intake plenum.

Throttle Body

The throttle body (9E926) controls airflow to the engine (6007) through a double butterfly-type valve. The throttle position is controlled by a four-bar link, progressive opening, throttle linkage. The throttle body is a single-piece die casting made of aluminum.

Other features of the throttle body include:

1. A fixed stop to locate the wide-open throttle (WOT) position.
2. A throttle body-mounted throttle position sensor (TP sensor)(9B989).
3. A sludge-resistant coating applied to the downstream side of the throttle plate and bore area to reduce the plate-to-bore leakage. The coating should NOT be removed or cleaned.
4. The plate position at idle is set by the throttle return control (TRC) screw contacting the throttle lever arm. Do not adjust or tamper with this screw unless instructed to do so by the 1996 Powertrain Control / Emissions Diagnosis Manual.[1]

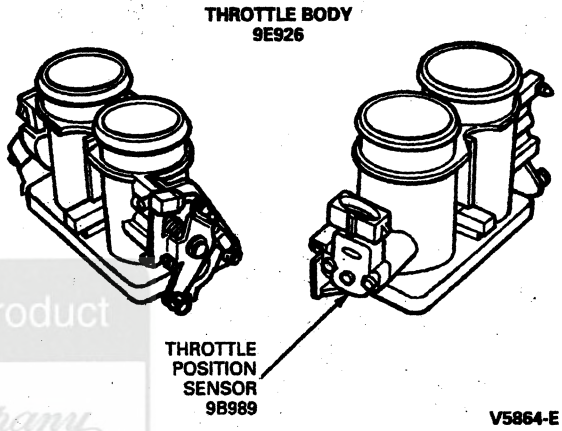

1 Can be purchased as a separate item.

DESCRIPTION AND OPERATION (Continued)

Intake Manifold

The intake manifold (9424) is a two-piece (upper and lower) aluminum casting. Runner lengths are tuned to optimize engine torque and power output. The intake manifold provides mounting flanges for the throttle body (9E926), fuel injection supply manifold (9F792) and accelerator control bracketry, idle air control valve (IAC valve)(9F715) and the EGR external pressure valve (9F483). Vacuum taps are provided to support various engine accessories. Pockets for the fuel injectors (9F593) are machined to prevent both air and fuel leakage. The pockets in which the fuel injectors are mounted are placed to direct the injector fuel spray immediately in front of each engine intake valve (6507).

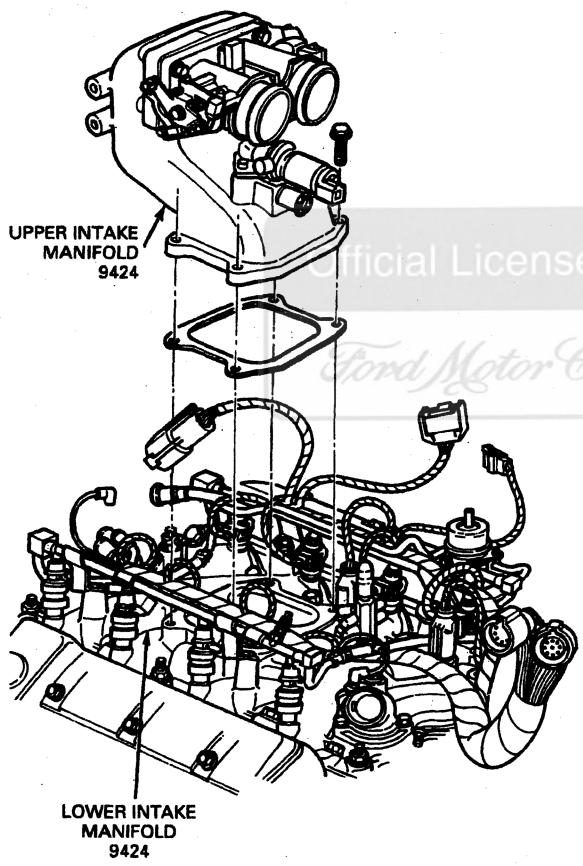

V5861-E

Fuel Injectors

The fuel injector (9F593) is a solenoid-operated valve that meters fuel flow to the engine (6007). The fuel injector is opened and closed a constant number of times per crankshaft revolution. The amount of fuel is controlled by the length of time the fuel injector is held open. The fuel injector is normally closed and is operated by a signal from the powertrain control module (PCM)(12A650).

Fuel Injection Supply Manifold

The fuel injection supply manifold (9F792) delivers high-pressure fuel from the vehicle fuel supply line to the eight fuel injectors (9F593). The fuel injection supply manifold consists of two banks of tubular fuel rails connected by two permanent crossover connections, eight injector connectors, a mounting flange to the fuel pressure regulator (9C968) and mounting attachments that locate the fuel injection supply manifold and provide fuel injector retention. The fuel inlet and return have push-connect fittings. The unit is serviced as an assembly only.

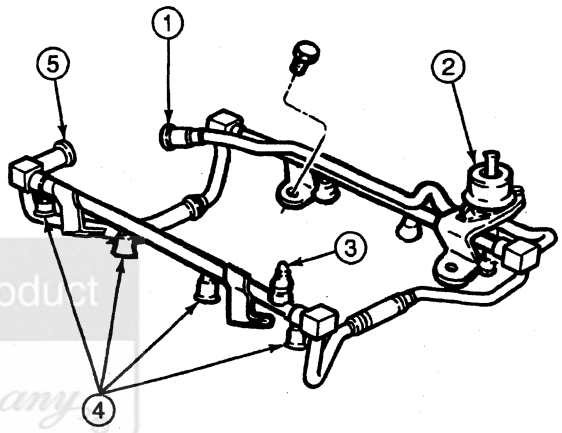

V5865-E

Item	Part Number	Description
1	—	Fuel Return (Part of 9F792)
2	9C968	Fuel Pressure Regulator
3	9H321	Fuel Pressure Relief Valve
4	—	Injector Pockets (Part of 9F792)
5	—	Fuel Inlet (Part of 9F792)

Official Licensed Product
Ford Motor Company

DESCRIPTION AND OPERATION (Continued)

Fuel Pressure Regulator

The fuel pressure regulator (9C968) is attached to the fuel injection supply manifold (9F792) downstream of the fuel injectors (9F593). It regulates the fuel pressure supplied to the fuel injectors. The fuel pressure regulator is a diaphragm-operated relief valve in which one side of the diaphragm senses fuel pressure and the other side is subjected to intake manifold vacuum. The nominal fuel pressure is established by a spring preload applied to the diaphragm. Balancing one side of the diaphragm with manifold pressure maintains a constant fuel pressure drop across the fuel injectors. Fuel in excess of that used by the engine is bypassed through the fuel pressure regulator and returns to the fuel tank (9002).

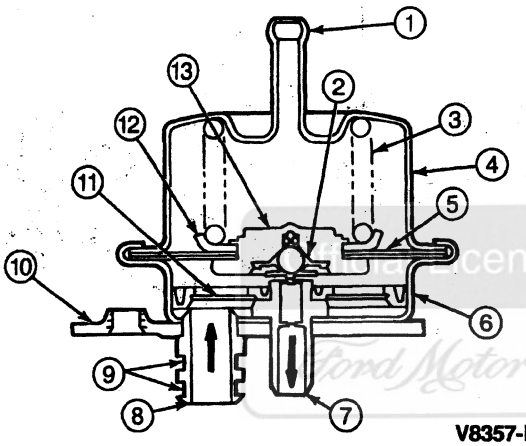

V8357-B

Item	Part Number	Description
1	—	Engine Vacuum Reference Tube (Part of 9C968)
2	—	Ball Seat (Part of 9C968)
3	—	Spring (Part of 9C968)
4	—	Upper Housing (Part of 9C968)
5	—	Diaphragm (Part of 9C968)
6	—	Lower Housing (Part of 9C968)
7	—	Fuel Outlet Tube (Return) (Part of 9C968)
8	—	Fuel Inlet Tube (Supply) (Part of 9C968)
9	—	O-Ring Groove (Part of 9C968)
10	—	Mounting Plate (Part of 9C968)
11	—	Fuel Filter Spring (Part of 9C968)
12	—	Spring Seat (Part of 9C968)
13	—	Valve Assy (Part of 9C968)

(Continued)

Fuel Pressure Relief Valve

The fuel pressure relief valve (9H321) is used to relieve fuel pressure from the fuel system. The fuel pressure relief valve is located on the fuel injection supply manifold (9F792).

Fuel Charging Wiring

The fuel charging wiring (9D930) connects the engine wire harness to each fuel injector (9F593) and other electronic engine controls such as throttle position sensor (TP sensor)(9B989) and idle air control valve (IAC valve)(9F715). The fuel charging wiring receives fuel injector signals from the powertrain control module (PCM)(12A650) and transfers the signals to the fuel injectors. The signals from the powertrain control module determine the fuel injection sequence and duration each fuel injector will stay open to allow fuel into the combustion chambers.

Inertia Fuel Shutoff (IFS) Switch

The inertia fuel shutoff switch (IFS switch)(9341) is used in conjunction with an electric fuel pump (9350). The purpose of the inertia fuel shutoff switch is to shut off the fuel pump in the event of a collision. It consists of a steel ball held in place by a magnet. When a sharp impact occurs, the ball breaks loose from the magnet, rolls up a ramp and strikes a target plate that opens the electrical contacts of the inertia fuel shutoff switch and shuts off the fuel pump. Once the inertia fuel shutoff switch is open, it must be manually reset before restarting the vehicle.

The inertia fuel shutoff switch is located behind the LH cowl side trim panel.

DESCRIPTION AND OPERATION (Continued)

Inertia Fuel Shutoff Switch

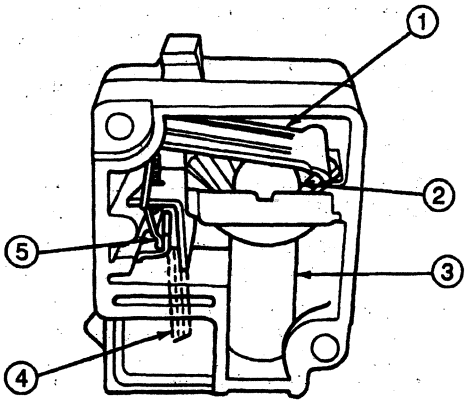

CUTAWAY VIEW

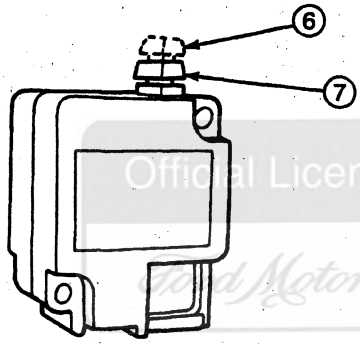

EXTERNAL VIEW

V9333-A

Item	Part Number	Description
1	—	Target Plate (Part of 9341)
2	—	Ball (Part of 9341)
3	—	Magnet (Part of 9341)
4	—	Switch Terminals (Part of 9341)
5	—	Electrical Contacts (Part of 9341)
6	—	Reset Button Position for Open Switch (Part of 9341)
7	—	Closed Switch (Part of 9341)

(Continued)

Fuel Pump Relay

The fuel pump relay supplies power to the fuel pump (9350) when the powertrain control module (PCM)(12A650) grounds the relay during START and engine RUN conditions.

DIAGNOSIS AND TESTING

Fuel Charging and Controls

Refer to 1996 Powertrain Control/Emissions Diagnosis Manual.[2]

Official Licensed Product Ford Motor Company

2 Can be purchased as a separate item.

REMOVAL AND INSTALLATION

Fuel Charging System

Pre-Service Procedures

The fuel charging assembly consists of the throttle body (9E926), and the upper and lower intake manifolds (9424). Prior to service or removal of the fuel charging assembly, the following steps must be taken:

1. Disconnect battery ground cable (14301) and secure it out of the way. Remove the fuel supply manifold shield (9J314).
2. Disconnect air cleaner outlet tube (9B659) from throttle body.
3. Remove fuel tank filler cap (9030) to relieve tank pressure.
4. Relieve pressure from fuel system at fuel pressure relief valve (9H321) (Schrader) on fuel injection supply manifold (9F792), as described in the following procedure.

Fuel Pressure Relief

WARNING: FUEL SUPPLY TUBES WILL REMAIN PRESSURIZED FOR LONG PERIODS OF TIME AFTER ENGINE SHUTDOWN. THIS PRESSURE MUST BE RELIEVED BEFORE SERVICING THE FUEL SYSTEM. A VALVE IS PROVIDED ON THE FUEL INJECTION SUPPLY MANIFOLD FOR THIS PURPOSE.

SPECIAL SERVICE TOOL(S) REQUIRED

Description	Tool Number
Multiport Fuel Injection (MFI) Fuel Pressure Gauge (EFI/CFI)	T80L-9974-B

1. Remove the protective cap from the fuel pressure relief valve.
2. Connect Multiport Fuel Injection (MFI) Fuel Pressure Gauge (EFI/CFI Fuel Pressure Gauge) T80L-9974-B to the fuel pressure relief valve on the fuel injection supply manifold.
3. Place end of the adapter hose in a suitable container.
4. Open the manual valve on the fuel pressure gauge to relieve fuel system pressure.
5. Close the manual valve and disconnect the tool from the fuel pressure relief valve. Remove container.
6. Install the protective cap on the fuel pressure relief valve.

Post-Service Procedures

After the service is complete and the fuel charging assembly is installed onto engine (6007), the following steps must be taken:

1. Install air cleaner outlet tube to throttle body.
2. Install the fuel tank filler cap.
3. NOTE: When the battery (10655) has been disconnected and reconnected, some abnormal drive symptoms may occur while the powertrain control module (PCM)(12A650) relearns its adaptive strategy. The vehicle may need to be driven 16 km (10 miles) or more to relearn the strategy.

   Connect battery ground cable.
4. **WARNING: THE FUEL SYSTEM IS NORMALLY PRESSURIZED TO 275 KPA (40 PSI).**

   NOTE: Check all connections at fuel rails, push-connect fittings, fuel injectors (9F593), etc.

   Turn ignition switch (11572) on and off several times without starting engine to pressurize the fuel system. Check for fuel leaks at fuel pressure regulator (9C968), fuel injectors and fuel connect fittings.
5. Start engine and warm to operating temperature. Check for coolant leak if coolant was removed.
6. Perform EEC Self Test to check system's function. Refer to the 1996 Powertrain Control/Emissions Diagnosis Manual.[3] Recheck for fuel leaks.

Spring Lock Coupling

SPECIAL SERVICE TOOL(S) REQUIRED

Description	Tool Number
Spring Lock Coupling Disconnect Tool	T81P-19623-G1
Spring Lock Coupling Disconnect Tool	T81P-19623-G2

The spring lock coupling is a fuel line coupling held together by a garter spring inside a circular cage. When the coupling is connected, the flared end of the female fitting slips behind the garter spring inside the cage of the male fitting. The garter spring and cage then prevent the flared end of the female fitting from pulling out of the cage. As a redundant locking feature, a horseshoe-shaped retaining clip is incorporated to improve the retaining reliability of the spring lock coupling.

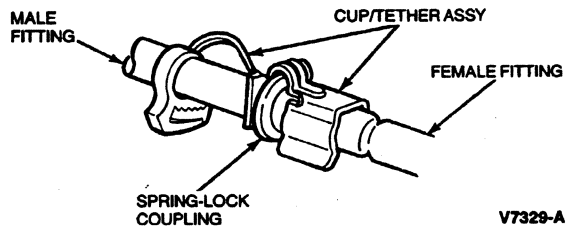

Removal

1. Perform pre-service procedures as described under Fuel Charging System in the Removal and Installation portion of this section.

3 Can be purchased as a separate item.

REMOVAL AND INSTALLATION (Continued)

2. **CAUTION: Do not use any sharp tool or screwdriver; it can damage the spring lock coupling.**

   Remove retaining clip from spring lock coupling by hand only.
3. Twist fitting to free it from any adhesion at the O-ring seals.
4. Using Spring Lock Coupling Disconnect Tool T81P-19623-G1 (3/8-Inch) or T81-19623-G2 (1/2-Inch), disconnect fuel hoses at the fuel rail supply tube and fuel rail return tube.
   a. Fit tool to coupling so tool can enter cage to release garter spring.
   b. Push the tool into the cage opening to release female fitting from garter spring.
   c. Pull the male and female fittings of the coupling apart.
   d. Remove the tool from the disconnected coupling.

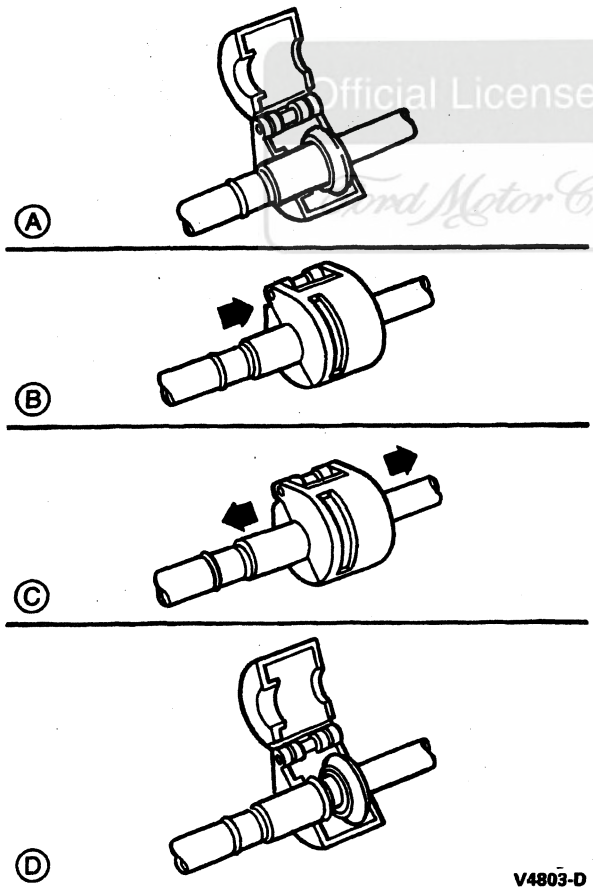

Official Licensed Product
Ford Motor Company

Installation

1. **WARNING: USE ONLY THE SPECIFIED O-RINGS; THEY ARE MADE OF A SPECIAL MATERIAL. THE USE OF ANY O-RING OTHER THAN THE SPECIFIED O-RING CAN ALLOW THE CONNECTION TO LEAK FUEL INTERMITTENTLY DURING VEHICLE OPERATION.**

   Make sure the garter spring is in cage of male fitting. If garter spring is missing, install a new spring by pushing it into cage opening. If garter spring is damaged, remove it from cage with a small wire hook (do not use a screwdriver) and install a new spring.
2. Clean all dirt or foreign material from both pieces of coupling.
3. Replace missing or damaged O-rings.
4. Lubricate male fitting and O-rings and inside of female fitting with clean engine oil XO-10W30-QSP or equivalent meeting Ford specification ESE-M2C153-E.
5. Fit female fitting to male fitting and push until garter spring snaps over flared end of female fitting.
6. Make sure of coupling engagement by pulling on fitting and visually checking to make sure garter spring is over flared end of female fitting.
7. NOTE: All vehicles require the large black clip to be installed on the supply side fuel line and the small gray clip to be installed on the return side fuel line.

   Position retaining clip over metal portion of spring lock coupling. Firmly push retaining clip onto spring lock coupling. Make sure horseshoe portion of clip is over the coupling. Do not install retaining clip over rubber fuel line.
8. Perform post-service procedures as described under Fuel Charging System in the Removal and Installation portion of this section.

Throttle Body

Removal

1. Remove air inlet hoses.
2. Disconnect throttle linkage at throttle ball and automatic transmission linkage, if so equipped, from throttle body (9E926).

REMOVAL AND INSTALLATION (Continued)

3. Disconnect electrical connector at throttle position sensor (TP sensor)(9B989).

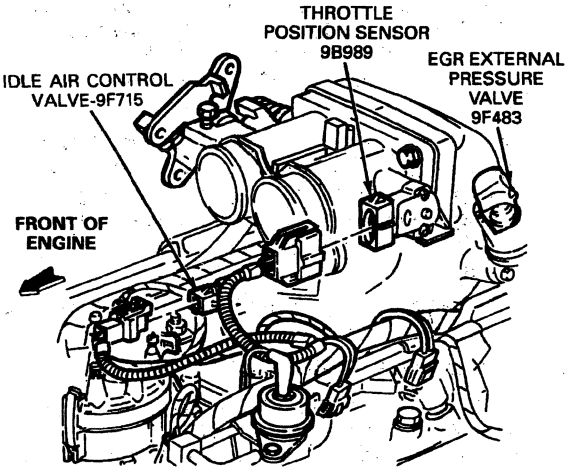

V5869-G

4. Remove four throttle body bolts.
5. Carefully separate throttle body from upper intake manifold (9424).

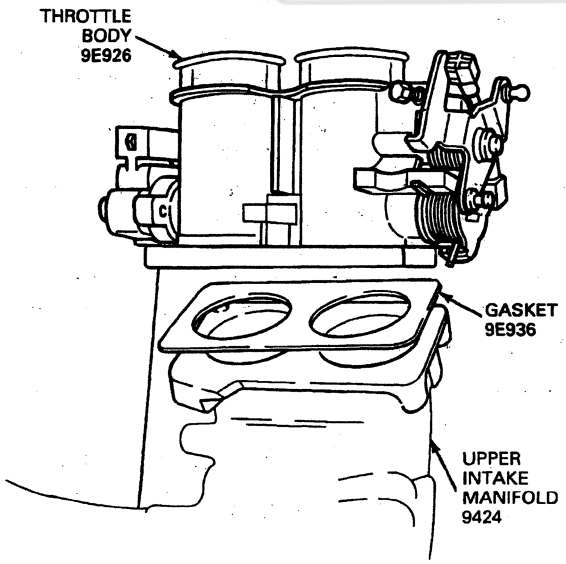

V5871-F

Installation

1. NOTE: If scraping is necessary, be careful not to damage gasket surfaces of throttle body and upper intake manifold, or allow material to drop into intake manifold.

   Install a new throttle body gasket (TB gasket)(9E936) between upper intake manifold and throttle body. Make sure throttle body gasket stays in place if alignment studs are not used.
2. Install throttle body to upper intake manifold.
3. Secure throttle body to upper intake manifold with four retaining bolts. Tighten to 19-27 N·m (14-20 lb-ft).

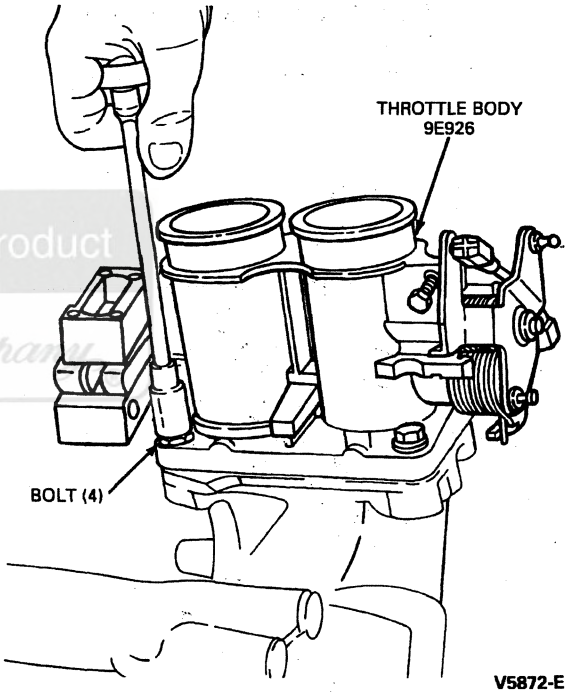

V5872-E

4. Connect throttle linkage to throttle ball and automatic transmission linkage, if so equipped.
5. Connect throttle position sensor electrical connectors.
6. Connect air inlet hoses.

Fuel Injectors

Removal

1. Perform pre-service procedures as described under Fuel Charging System in the Removal and Installation portion of this section.
2. Remove upper intake manifold (9424). Refer to Section 03-01B.

Official Licensed Product
Ford Motor Company

REMOVAL AND INSTALLATION (Continued)

3. Remove fuel injection supply manifold (9F792) as described under Fuel Injection Supply Manifold in the Removal and Installation portion of this section.
4. Carefully remove electrical harness connectors from individual fuel injectors (9F593) as required.
5. Grasping injector body, pull up while gently rocking fuel injector from side to side.

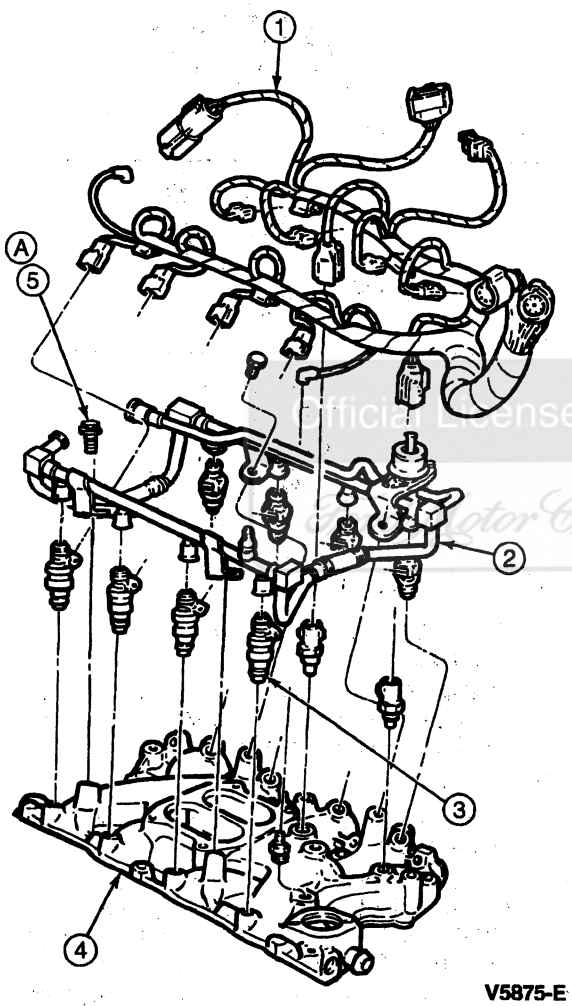

V5875-E

Item	Part Number	Description
1	9D930	Fuel Charging Wiring
2	9F792	Fuel Injection Supply Manifold
3	9F593	Fuel Injector
4	9424	Intake Manifold, Lower
5	56105-S2	Bolt
A	—	Tighten to 8-12 N·m (71-106 Lb-In)

6. Inspect injector O-rings (two per injector) for signs of deterioration. Replace as required.
7. NOTE: End cap is not available as a separate part.

   Inspect fuel injector for wear or damage. Replace as necessary.

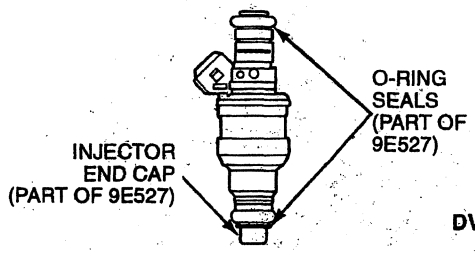

DV0310-A

Installation

1. **CAUTION: Never use silicone lubricant. It will clog the fuel injectors.**

   Lubricate new O-rings with light grade oil XO-10W30-QSP or equivalent meeting Ford specification ESE-M2C153-E and install two on each fuel injector.
2. Install fuel injectors. Use a light, twisting, pushing motion to install them.
3. Install fuel injection supply manifold as described under Fuel Injection Supply Manifold in the Removal and Installation portion of this section.
4. Install electrical harness connectors to fuel injectors.
5. Install upper intake manifold. Refer to Section 03-01B.
6. Perform post-service procedures as described under Fuel Charging System in the Removal and Installation portion of this section.

Fuel Injection Supply Manifold

SPECIAL SERVICE TOOL(S) REQUIRED

Description	Tool Number
Spring Lock Coupling Disconnect Tool	T81P-19623-G1
Spring Lock Coupling Disconnect Tool	T81P-19623-G2

Removal

1. Perform pre-service procedures as described under Fuel Charging System in the Removal and Installation portion of this section.
2. Remove upper intake manifold (9424). Refer to Section 03-01B.
3. Remove fuel line-to-fuel supply manifold retainer clips.

Official Licensed Product Ford Motor Company

REMOVAL AND INSTALLATION (Continued)

4. Disconnect vacuum hose at fuel pressure regulator (9C968).

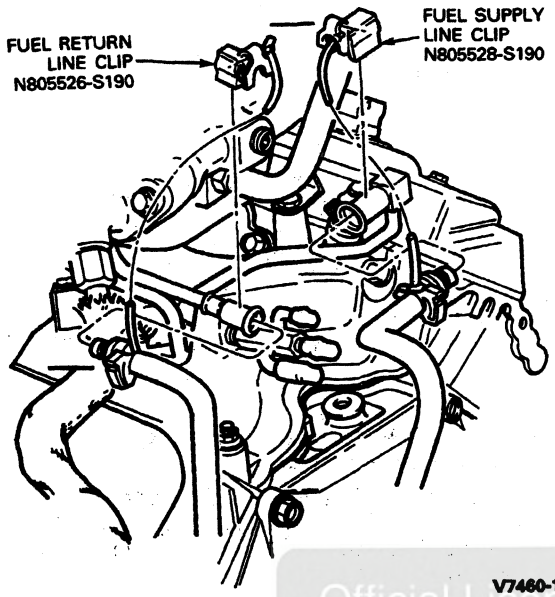

V7460-1A

5. **WARNING: RELIEVE FUEL SYSTEM PRESSURE BEFORE DISCONNECTING COUPLING.**

   Using Spring Lock Coupling Disconnect Tool T81P-19623-G1 (3/8-Inch) or T81P-19623-G2 (1/2-Inch), disconnect fuel hoses at the fuel rail supply tube and fuel rail return tube.

   a. Fit tool to coupling so tool can enter cage to release garter spring.
   b. Push the tool into the cage opening to release female fitting from garter spring.
   c. Pull the coupling male and female fittings apart.
   d. Remove the tool from the disconnected coupling.

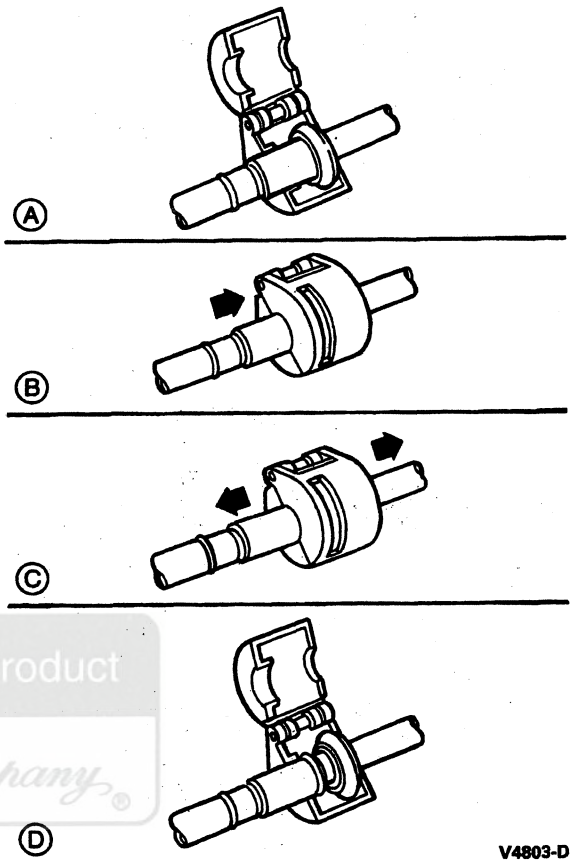

V4803-D

6. Remove four fuel injection supply manifold retaining bolts.
7. Carefully disengage fuel injection supply manifold (9F792) from fuel injectors (9F593) and remove fuel injection supply manifold.

Installation

1. Make sure injector caps are clean and free of contamination.
2. Place the fuel injection supply manifold over each of the fuel injectors and seat fuel injectors into fuel injection supply manifold. Make sure fuel injectors are properly seated.
3. Secure fuel injection supply manifold using four retaining bolts. Tighten to 8-12 N·m (71-106 lb-in).
4. Connect fuel inlet and outlet lines at fuel injection supply manifold connections. Push in to connect.
5. Install fuel line-to-fuel injection supply manifold retaining clips.
6. Connect vacuum hose to fuel pressure regulator.
7. Install upper intake manifold. Refer to Section 03-01B.
8. Perform Post-Service procedures as described under Fuel Charging System in the removal and installation portion of this section.

Official Licensed Product Ford Motor Company

REMOVAL AND INSTALLATION (Continued)

Fuel Pressure Regulator

Removal

1. Perform pre-service procedures as described under Fuel Charging System in the Removal and Installation portion of this section.
2. Remove vacuum line at fuel pressure regulator (9C968).
3. Remove two socket head retaining screws from fuel pressure regulator housing.
4. Remove fuel pressure regulator, return seal and O-rings. Discard return seal and O-rings.
5. If scraping is necessary, be careful not to damage fuel pressure regulator or fuel supply line seal surfaces.

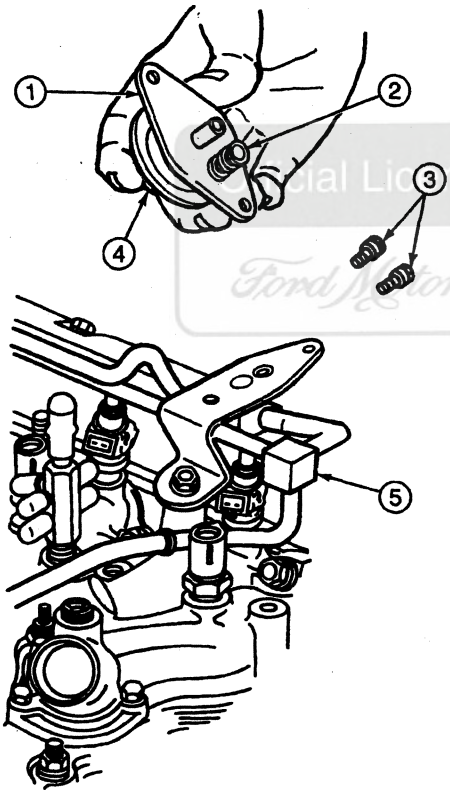

V5874-D

Item	Part Number	Description
1	N807244	Return Seal
2	N807547	O-Ring
3	N802353-S101	Screws
4	9C968	Fuel Pressure Regulator
5	9F792	Fuel Injection Supply Manifold

Installation

1. NOTE: Never use silicone grease. It will clog the fuel injectors (9F593).

   Lubricate fuel pressure regulator O-rings with light oil XO-10W30-QSP or equivalent meeting Ford specification ESE-M2C153-E.
2. Make sure return seal surfaces of fuel pressure regulator and fuel injection supply manifold (9F792) are clean.
3. Install new O-rings on fuel pressure regulator inlet tube and a new return seal in the recess of the fuel rail return port.
4. Install fuel pressure regulator on fuel injection supply manifold. Tighten two retaining screws to 3-5 N·m (27-44 lb-in).
5. Install vacuum line to fuel pressure regulator.
6. Perform post-service procedures as described under Fuel Charging System in the Removal and Installation portion of this section.

Fuel Charging Wiring

Removal

1. Remove upper intake manifold (9424). Refer to Section 03-01B.
2. Disconnect fuel charging wiring (9D930) from fuel injectors (9F593) and electronic engine controls.
3. Remove fuel charging wiring ground strap retainer nut and ground strap.
4. Disconnect fuel charging wiring from engine control sensor wiring (12A581).

Installation

1. Follow removal procedure in reverse order.
2. Verify all connections.

Fuel Pump Relay

Removal

1. Locate and remove malfunctioning fuel pump relay by pulling it out of its cavity.

Installation

1. Replace fuel pump relay with one of the proper amp rating for the circuit by pushing straight in until fuel pump relay seats itself fully in cavity.

CLEANING AND INSPECTION

Throttle Body

The throttle body (9E926) for this vehicle is a sludge-resistant design and should not be cleaned.

Special Licensed Product
Ford Motor Company

ADJUSTMENTS

Idle Speed

Refer to 1996 Powertrain Control / Emissions Diagnosis Manual[4] for Idle Speed Diagnosis Procedure.

SPECIFICATIONS

LUBRICANT / ADHESIVE / CLEANER SPECIFICATIONS

Description	Part Number	Ford Specification
Engine Oil	XO-10W30-QSP	ESE-M2C153-E

TORQUE SPECIFICATIONS

Description	N·m	Lb-Ft	Lb-In
Throttle Body to Upper Intake Manifold Bolts	19-27	14-20	—
Fuel Pressure Regulator to Fuel Injection Supply Manifold Screws	3-5	—	27-44
Fuel Injection Supply Manifold Retaining Bolts	8-12	—	71-106

SPECIAL SERVICE TOOLS / EQUIPMENT

SPECIAL SERVICE TOOLS REQUIRED

Tool Number / Description	Illustration
T80L-9974-B Multiport Fuel Injection (MFI) Fuel Pressure Gauge (EFI / CFI)	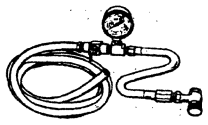 T80L-9974-B
T81P-19623-G1 Spring Lock Coupling Disconnect Tool (3/8-Inch)	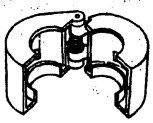 T81P-19623-G1
T81P-19623-G2 Spring Lock Coupling Disconnect Tool (1/2-Inch)	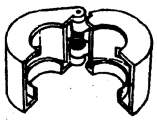 T81P-19623-G2

Official Licensed Product
Ford Motor Company

4 Can be purchased as a separate item.

SECTION 03-04C Fuel Charging and Controls, 7.3L Diesel Engine

SUBJECT	PAGE
VEHICLE APPLICATION	03-04C-1
DESCRIPTION AND OPERATION	
Air Induction System	03-04C-3
Fuel Charging Wiring	03-04C-8
Fuel Damper, California Vehicles Only	03-04C-3
Fuel Injection Timing	03-04C-3
Fuel Injectors	03-04C-5
Fuel Pressure Regulator	03-04C-7
Fuel Pump	03-04C-4
Fuel System	03-04C-1
Pressure Regulator, Oil	03-04C-7
Turbocharger System	03-04C-8
DIAGNOSIS AND TESTING	
Fuel Charging and Controls	03-04C-8
REMOVAL AND INSTALLATION	
Fittings, Push Connect, Steel	03-04C-8
Fuel Charging Wiring	03-04C-20
Fuel Control, Manifold	03-04C-11
Fuel Filter, Fuel Heater, Water Separator, Draining	03-04C-9
Fuel Filter/Heater/Water Separator Assembly	03-04C-10
REMOVAL AND INSTALLATION (Cont'd.)	
Fuel Heater	03-04C-9
Fuel Injector	03-04C-16
Fuel Pressure Regulator	03-04C-11
Fuel Pulse Damper, California Vehicles Only	03-04C-22
Installation	03-04C-22
Fuel Pump	03-04C-21
Oil Pressure Regulator	03-04C-20
Oil Pump Drive Gear and Oil Reservoir, High-Pressure	03-04C-14
Oil Pump, High-Pressure	03-04C-12
CLEANING AND INSPECTION	
Coolant in Oil	03-04C-22
Fuel in Coolant Leak	03-04C-25
ADJUSTMENTS	
Idle Speed	03-04C-26
SPECIFICATIONS	03-04C-26
SPECIAL SERVICE TOOLS/EQUIPMENT	03-04C-26

Official Licensed Product Ford Motor Company

VEHICLE APPLICATION

F-250 Heavy Duty, F-350 and F-Super Duty

DESCRIPTION AND OPERATION

Fuel System

The fuel system used on the 7.3L direct injection (DI) turbo diesel engine:

- is controlled by the powertrain control module (PCM)(12A650).
- is comprised of a two-phase fuel pump.
- uses a one-piece fuel filter, water separator and fuel heater assembly.

Fuel is drawn from the fuel tank (9002) by the fuel pump (9350), then under low pressure is circulated through the fuel filter (9155) and back to the fuel pump to be circulated under high pressure to the cylinder head fuel galleries. From there the fuel is delivered to the combustion chambers through the electronically controlled/hydraulically actuated fuel injectors.

The cylinder head (6049) is:

- specially designed to incorporate electronically controlled/hydraulically activated fuel injectors.
- designed to locate the fuel injectors near the center of the combustion chamber.

DESCRIPTION AND OPERATION (Continued)

Fuel System Components

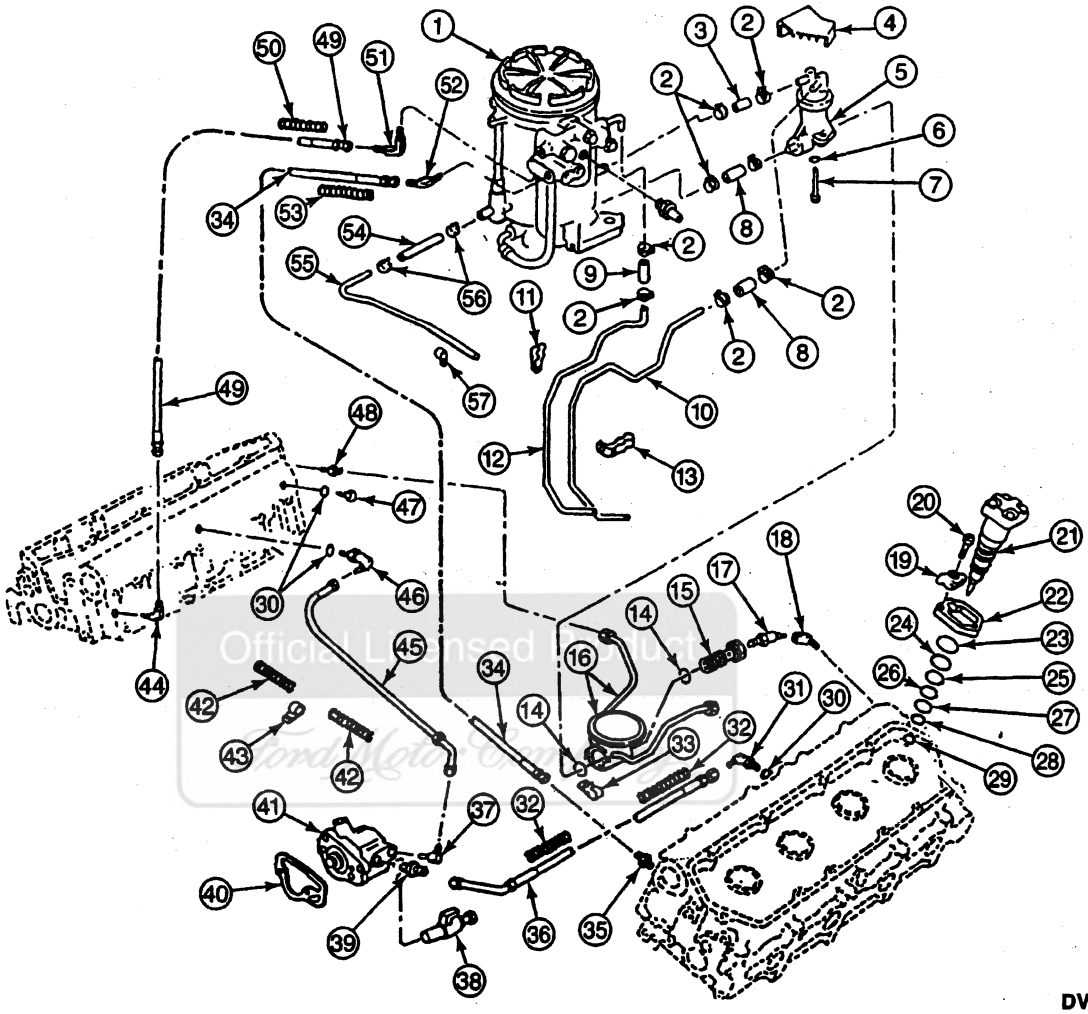

DV0244-A

Item	Part Number	Description
1	9155	Fuel Filter
2	9C334	Fuel Tube Clamp
3	9324	Fuel Filter Supply Hose
4	9E313	Fuel Shield
5	9350	Fuel Pump
6	9N693	Fuel Pump Seal
7	—	Fuel Pump Tappet (Part of 9350)
8	9D308	Fuel Return Hose
9	9D308	Fuel Return Hose
10	9C330	Fuel Pump Supply Tube
11	—	Fuel Supply and Return Tube Clamp (Part of 9C330)
12	9A564	Fuel Return Tube
13	—	Fuel Supply and Return Hose Clamp (Part of 9C330)

(Continued)

Item	Part Number	Description
14	—	Fuel Pump Fitting Gasket (Part of 9A555)
15	—	Fuel Pump Outlet Bolt (Part of 9A555)
16	9A555	Fuel Injection Tube
17	—	45-Degree Street Elbow (Part of 9A555)
18	—	45-Degree Street Elbow (Part of 9A555)
19	—	Oil Deflector (Part of 9F593)
20	—	Bolt (Part of 9F593)
21	9F593	Fuel Injector
22	—	Fuel Injector Hold-Down Clamp (Part of 9F593)
23	—	Backup Ring (Part of 9F593)

(Continued)

DESCRIPTION AND OPERATION (Continued)

Item	Part Number	Description
24	—	Cushion Ring (Part of 9F593)
25	—	Fuel Injector Upper Seal (Part of 9F593)
26	—	Fuel Injector Middle Seal (Part of 9F593)
27	—	Cushion Ring (Part of 9F593)
28	—	Fuel Injector Lower Seal (Part of 9F593)
29	—	Fuel Injector Gasket (Part of 9F593)
30	9N693	Elbow and Plug O-Ring
31	9E629	90-Degree High-Pressure Hose Elbow
32	9K260	Fuel Line Sleeve
33	9N653	High-Pressure Manifold Supply Hose Clamp
34	9D308	Fuel Return Hose
35	—	Fuel Return Connector (LH) (Part of 9D308)
36	9A332	High-Pressure Oil Pump Supply Hose
37	—	Elbow (Part of 9A543)
38	9C968	Injection Pressure Regulator
39	9K319	Connector

(Continued)

Item	Part Number	Description
40	9417	High-Pressure Oil Pump Flange Gasket
41	9A543	High-Pressure Oil Pump Assy
42	9K260	Fuel Line Sleeve
43	9N653	High-Pressure Oil Pump Supply Hose Clamp
44	9N320	90-Degree Fuel Return Elbow (RH)
45	9J323	High-Pressure Oil Pump Supply Hose
46	9N332	90-Degree High-Pressure Hose Elbow
47	9K024	Supply Rail Plug with O-Ring
48	390147-S	Straight Connector
49	9D308	Fuel Return Hose
50	9K260	Fuel Line Sleeve
51	9N320	Fuel Return Hose Elbow
52	9N320	Fuel Return Hose Elbow
53	9K260	Fuel Line Sleeve
54	9324	Fuel Filter Water Drain Hose
55	9L273	Water Drain Tube
56	9C334	Fuel Tube Clamp
57	9W310	Water Drain Tube Clip

Fuel Injection Timing

The period of time the fuel injectors (9F593) are energized is controlled by the powertrain control module (PCM)(12A650).

Air Induction System

Refer to Section 03-12.

Fuel Damper, California Vehicles Only

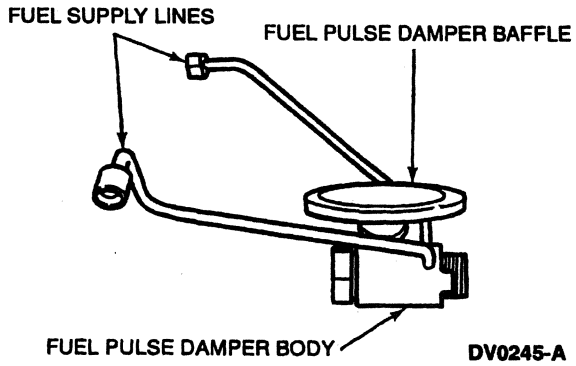

The fuel damper is located behind the fuel pump and is incorporated to control fuel pulsing.

DESCRIPTION AND OPERATION (Continued)

Fuel Pump

NOTE: The fuel pump shown is the 49-state fuel pump. The California fuel pump is similar; however, the two fuel pumps are not interchangeable.

The two-phase type fuel pump is comprised of the following:

- fuel inlet (from fuel tank)
- inlet check valve
- diaphragm, diaphragm rod and diaphragm spring
- piston and piston spring
- low-pressure inlet (from fuel filter)
- low-pressure inlet check valve
- O-ring, oil seal and fuel seal
- camshaft actuated tappet
- high-pressure outlet check valve
- high-pressure outlet (to cylinder head)
- low-pressure outlet check valve
- low-pressure outlet (to fuel filter)

Fuel is drawn from the fuel tank (9002) by the diaphragm section of the fuel pump (9350). The fuel pump circulates fuel at low pressure (approximately 21-69 kPa [3 to 10 psi]), first through the fuel filter (9155) and then back to the second stage of the fuel pump.

During the second stage, the piston-actuated section of the fuel pump supplies fuel at a pressure of approximately 275 kPa (40 psi) into the cylinder head fuel galleries.

Function and Operation of Fuel Pump

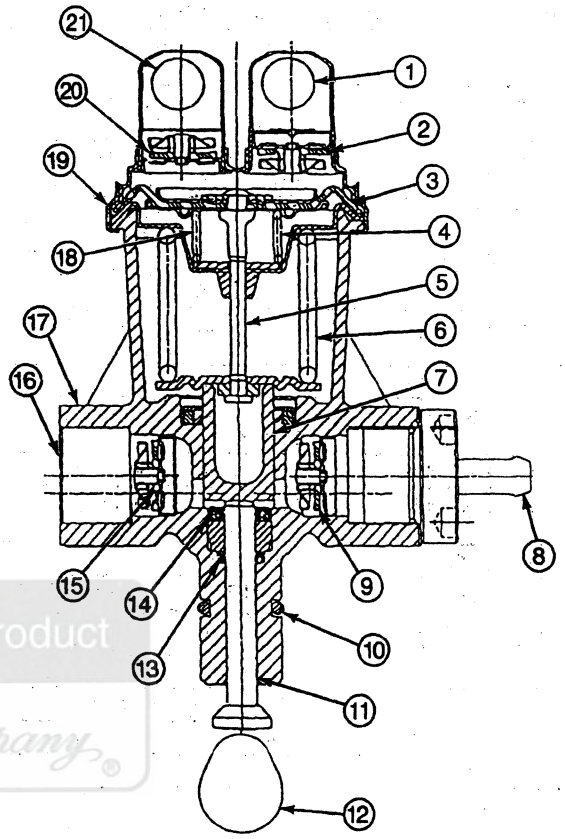

V9564-A

Item	Part Number	Description
1	—	Fuel Inlet (from Fuel Tank) (Part of 9350)
2	—	Inlet Check Valve (Part of 9350)
3	—	Diaphragm (Part of 9350)
4	—	Diaphragm Spring (Part of 9350)
5	—	Diaphragm Rod (Part of 9350)
6	—	Piston Spring (Part of 9350)
7	—	Piston (Part of 9350)
8	—	Low-Pressure Inlet (from Fuel Filter) (Part of 9350)
9	—	Inlet Check Valve (Part of 9350)
10	—	O-Ring (Part of 9350)
11	—	Tappet (Part of 9350)
12	—	Camshaft Lobe (Part of 9350)
13	—	Oil Seal (Part of 9350)
14	—	Fuel Seal (Part of 9350)

(Continued)

DESCRIPTION AND OPERATION (Continued)

Item	Part Number	Description
15	—	Outlet Check Valve (Part of 9350)
16	—	High-Pressure Outlet (to Cylinder Heads) (Part of 9350)
17	—	Piston Stage (Part of 9350)
18	—	Spring (Part of 9350)
19	—	Diaphragm Stage (Part of 9350)
20	—	Outlet Check Valve (Part of 9350)
21	—	Low-Pressure Outlet (Part of 9350)

Fuel Injectors

CAUTION: Color of Service Parts identification clip may differ from color of Production identification clip. Verify identification using part number and parts catalog.

Two similar electronically controlled/hydraulically actuated fuel injectors are used. They both are comprised of the following:

- solenoid
- armature
- poppet valve
- oil inlet port
- amplifier piston
- plunger
- nozzle check valve
- nozzle tip
- fuel inlet check ball
- fuel inlet port
- spill control port (rate-shaping injector, California only)

When the fuel injector is energized, a poppet valve is opened by an electronic solenoid mounted on the fuel injector. High-pressure oil from the high-pressure oil pump flows into the fuel injector and acts on the amplifier piston, forcing the piston plunger downward. As the plunger moves down, the increased fuel pressure closes the fuel inlet check ball. Rising fuel pressure overcomes spring pressure and opens the nozzle check valve. Fuel is then injected into the combustion chamber through the eight spray orifices in the nozzle tip at pressures as high as 124,110 kPa (18,000 psi). When the fuel injector is de-energized, high-pressure oil on top of the amplifier piston is vented by the poppet valve through the top portion of the fuel injector to the oil pan.

Ford Motor Company

DESCRIPTION AND OPERATION (Continued)

Fuel Injector

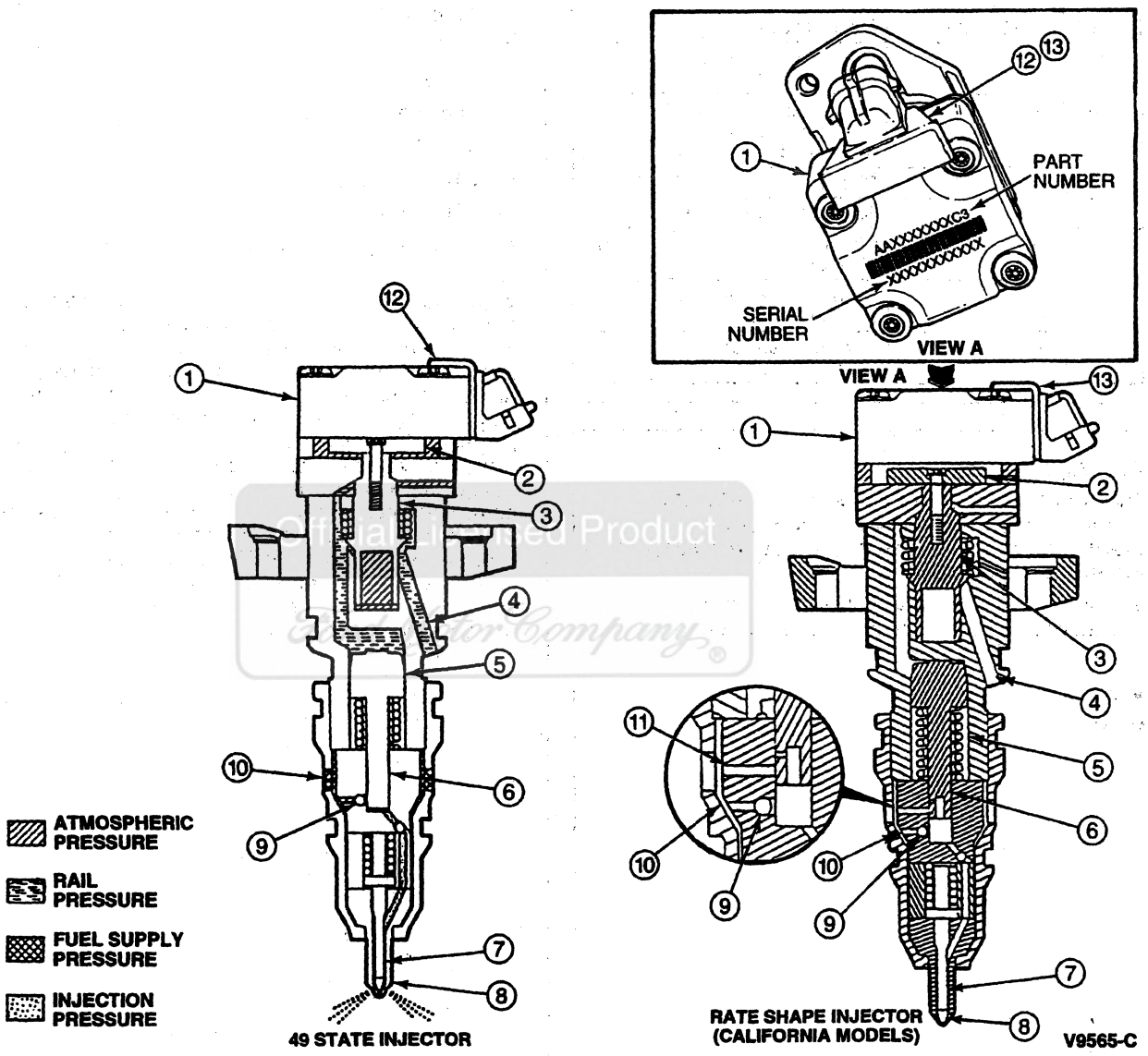

Item	Part Number	Description
1	—	Solenoid (Part of 9E527)
2	—	Armature (Part of 9E527)
3	—	Poppet Valve (Part of 9E527)
4	—	Oil Inlet Port (Part of 9E527)
5	—	Amplifier Piston (Part of 9E527)
6	—	Plunger (Part of 9E527)
7	—	Nozzle Check Valve (Part of 9E527)

(Continued)

Item	Part Number	Description
8	—	Nozzle Tip (Part of 9E527)
9	—	Fuel Inlet Check Ball (Part of 9E527)
10	—	Fuel Inlet Port (Part of 9E527)
11	—	Spill Control Port (California Only) (Part of 9E527)
12	—	Identification Clip — Medium Blue (49-State / Canada)
13	—	Identification Clip — Yellow (California Only)

DESCRIPTION AND OPERATION (Continued)

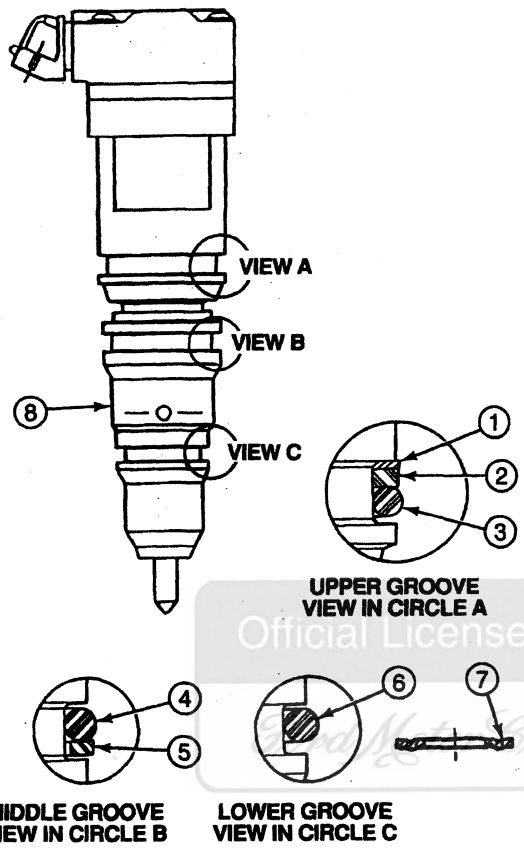

DV0111-A

Item	Part Identification	Description
1	Steel	Backup Ring (Part of 9F593)
2	Black	Cushion Ring (Part of 9F593)
3	Black	Upper Injector Seal (Part of 9F593)
4	White	Middle Injector Seal (Part of 9F593)
5	Black/Green	Cushion Ring (Part of 9F593)
6	Black	Lower Injector Seal (Part of 9F593)
7	Copper	Injector Gasket (Part of 9F593)
8	9F593	Fuel Injector

Fuel Pressure Regulator

Fuel pressure in the cylinder head fuel galleries is maintained at 275 kPa (40 psi) by a fuel pressure regulator. The fuel pressure regulator consists of a spring-loaded spool valve which opens to allow excess fuel to exit the cylinder head fuel galleries. The fuel pressure regulator is located in the fuel control manifold.

NOTE: Only certified replacement hoses with the correct part number should be used when servicing the 7.3L (DIT) fuel system. Any other hoses may not provide the pressure and flexibility required for proper fuel system operation.

Excess fuel from the cylinder head fuel galleries is routed to the fuel pressure regulator through special rubber compound hoses from the front of each cylinder head (6049). The hoses absorb and smooth pressure pulses from the piston stage of the fuel pump (9350).

The fuel pressure regulator can be replaced separately from the fuel control manifold.

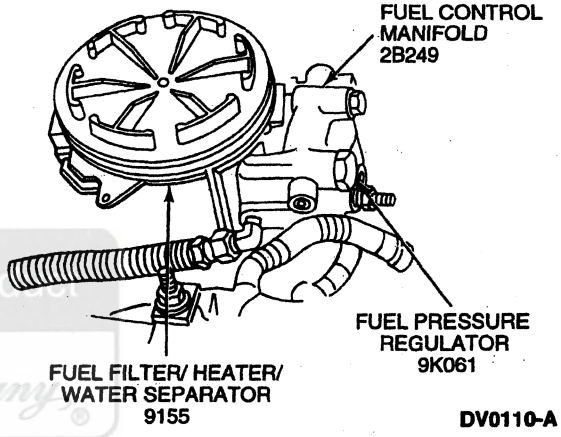

DV0110-A

Pressure Regulator, Oil

Fuel injection pressure is controlled by the control pressure (ICP) system. The ICP system consists of the oil pressure (ICP) sensor (located in the cylinder head oil gallery), the oil pressure regulator (IPR) (located in the high-pressure oil pump), and the powertrain control module (PCM)(12A650).

The powertrain control module interprets what is required for optimum engine performance based on sensor input. The ICP sensor tells the powertrain control module what the oil rail pressure is. If the powertrain control module determines that the fuel demand needs to be increased, the powertrain control module tells the oil pressure regulator (IPR) to increase oil flow and pressure to the fuel injectors (9F593).

Official Licensed Product Ford Motor Company

DESCRIPTION AND OPERATION (Continued)

Fuel Charging Wiring

The fuel charging wiring connects the engine wire harness to each fuel injector (9F593) and other electronic engine controls such as the injection control pressure (ICP) sensor, injection pressure regulator (IPR) and injector drive module (IDM). The fuel charging wiring receives fuel injector signals from the powertrain control module (PCM)(12A650) and transfers the signals to the fuel injectors. The signals from the powertrain control module determine the fuel injection sequence and the duration each fuel injector will stay energized, to allow fuel into the combustion chambers.

Turbocharger System

Refer to Section 03-04D.

DIAGNOSIS AND TESTING

Fuel Charging and Controls

Refer to the 1996 Powertrain Control/Emissions Diagnosis Manual[1] for non-California models.

REMOVAL AND INSTALLATION

Fittings, Push Connect, Steel

CAUTION: Discharge fuel system before disconnecting coupling.

SPECIAL SERVICE TOOL(S) REQUIRED

Description	Tool Number
Fuel Line Disconnect Tool Kit	T90T-9550-S
5/16-Inch	T90T-9550-B
3/8-Inch	T90T-9550-C

Removal

1. Open safety clip.

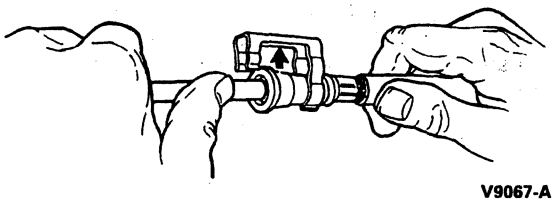

V9067-A

2. Fit Tool T90T-9550-B (5/16-inch) or T90T-9550-C (3/8-inch) to coupling so that tool can enter female fitting.

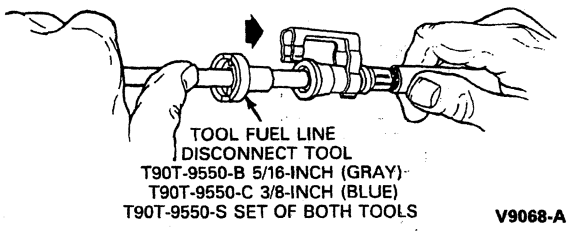

V9068-A

3. Push the tool into female fitting to release the retaining fingers from the formed male tube end.
4. Pull male and female fittings apart.

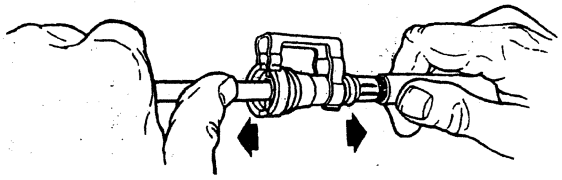

V9069-A

5. Remove the tool from the disconnected fitting.
6. Inspect the fitting for any internal parts that may have been damaged. Fuel tube should be replaced if internal parts are damaged.

Installation

1. Align the fitting and tube axially.

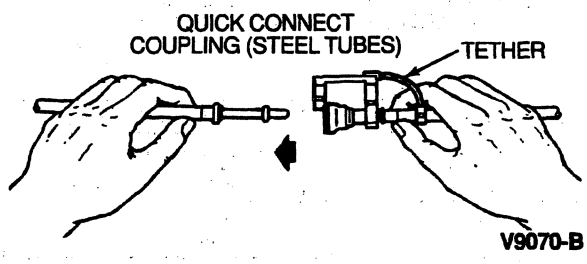

V9070-B

2. Push the tube into the fitting. When properly engaged, a definite "click" will be heard.

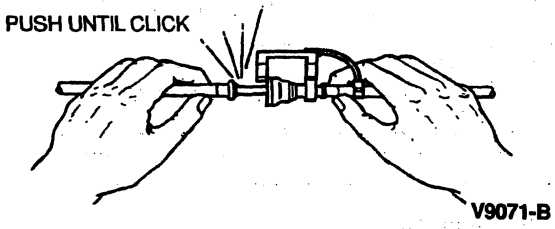

V9071-B

1 Can be purchased as a separate item.

Official Licensed Product
Ford Motor Company

REMOVAL AND INSTALLATION (Continued)

3. Pull on the fitting to make sure it is fully engaged.

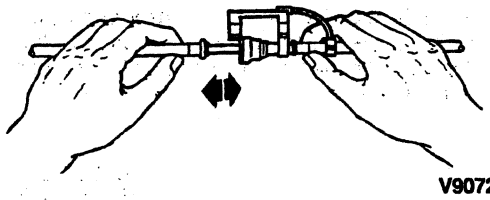

V9072-B

4. Lock assembly with safety clip.

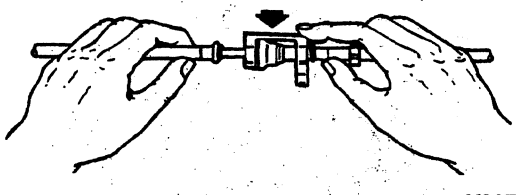

V9073-B

Fuel Filter, Fuel Heater, Water Separator, Draining

1. NOTE: To avoid engine stall-out caused by air entering the fuel system, do not drain fuel / water separator while the engine is running.

   Stop the vehicle and shut off the engine.
2. Place an appropriate container under the fuel filter / fuel heater / water separator drain tube to collect the drained fluid. The drain tube is attached to the manual drain valve at the base of the water separator drain bowl.
3. **WARNING: AFTER DRAINING WATER SEPARATOR, MAKE SURE THAT THE DRAIN VALVE IS FULLY CLOSED AND SECURE.**

   NOTE: Allow drain valve to remain open approximately 15 seconds or until clear (water-free) diesel fuel flows from the drain tube.

   Manually open the drain valve by rotating it away from the fuel filter (9155).

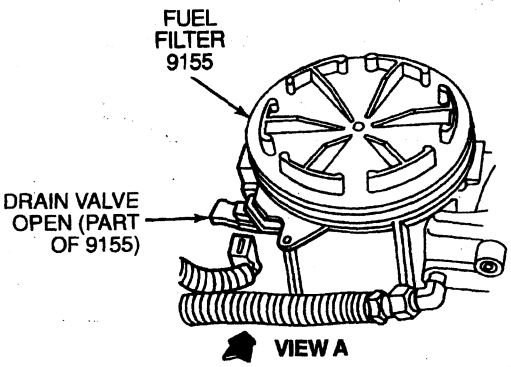

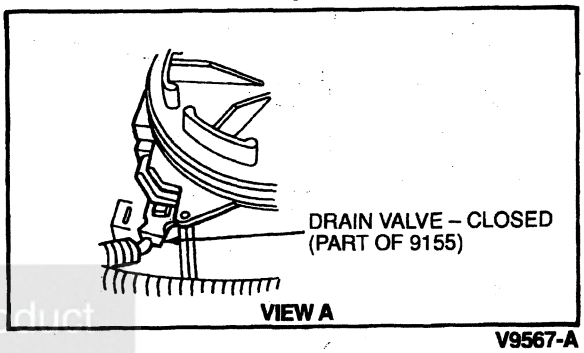

V9567-A

4. **WARNING: AFTER DRAINING WATER SEPARATOR, MAKE SURE THAT THE DRAIN VALVE IS FULLY CLOSED AND SECURE.**

   Close the drain tube by rotating manual valve back toward the fuel filter.
5. Restart the engine and check WATER IN FUEL lamp. The lamp should not glow. If it continues to glow have the fuel system checked and serviced.

Fuel Heater

Removal

1. Drain fuel filter housing. Refer to Fuel Filter Heater / Water Separator / Draining in the Removal and Installation portion of this section.
2. Remove fuel filter cap and element.
3. Disconnect heating element electrical connector.
4. Unscrew stand pipe from fuel filter housing.
5. NOTE: Bevel-cut gasket must be oriented properly or assembly will leak.

   Remove fuel heater element.

Official Licensed Product Company

REMOVAL AND INSTALLATION (Continued)

Installation

1. Follow removal procedure in reverse order.

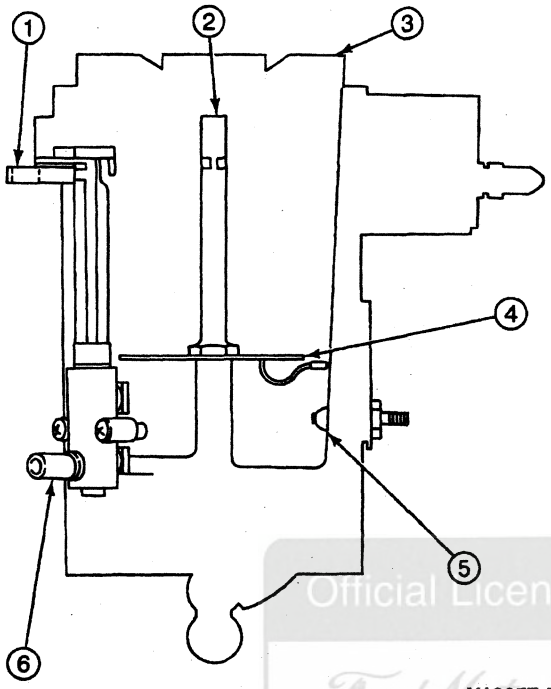

V10057-B

Item	Part Number	Description
1	—	Water Drain Lever (Part of 9155)
2	—	Stand Pipe (Part of 9155)
3	9155	Fuel Filter Housing
4	—	Heating Element (Part of 9155)
5	—	Water Sensor (Part of 9155)
6	—	Water Drain (Part of 9155)

Fuel Filter/Heater/Water Separator Assembly

Removal

1. Remove engine cover. Refer to Section 01-05.
2. Disconnect the primary and secondary batteries. Refer to Section 14-01.
3. Remove the air cleaner and the air induction tube. Refer to Section 03-12.
4. Remove the resonator and the air inlet duct. Refer to Section 03-04D.
5. Loosen the clamps and remove the compressor manifold from the turbocharger and the intake manifold runners.
6. Drain the fuel filter/heater/water separator assembly. Refer to Fuel Filter/Heater/Water Separator in the Removal and Installation portion of this section.

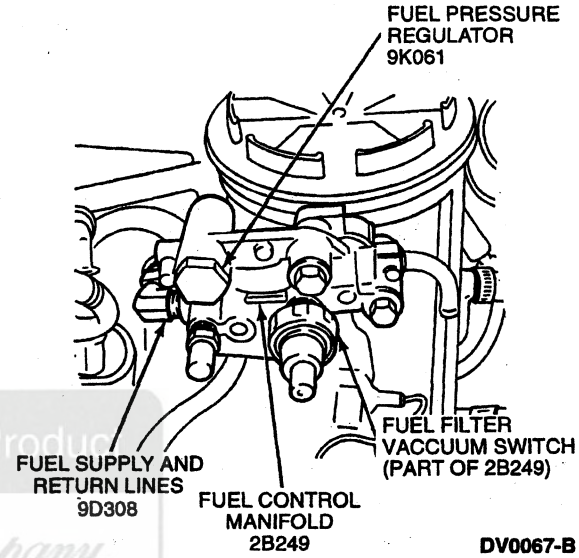

DV0067-B

7. Remove the two fuel lines from the fuel control manifold.

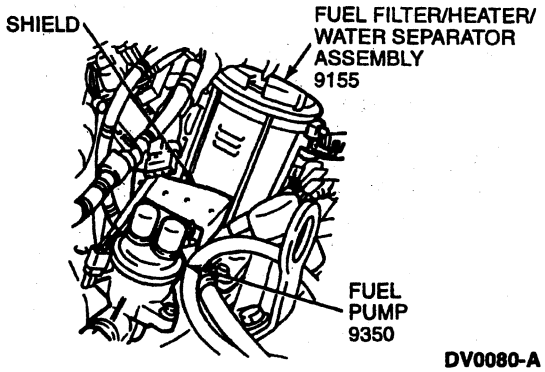

DV0080-A

8. Unclip and remove the shield from the fuel lines.
9. Loosen the clamp and disconnect the hose from the fuel control manifold.
10. Loosen the clamps and disconnect the two fuel lines from the fuel filter/heater/water separator assembly.

Official Licensed Product
Ford Motor Company

REMOVAL AND INSTALLATION (Continued)

11. Remove the two bolts retaining the fuel filter / heater / water separator assembly to the engine.

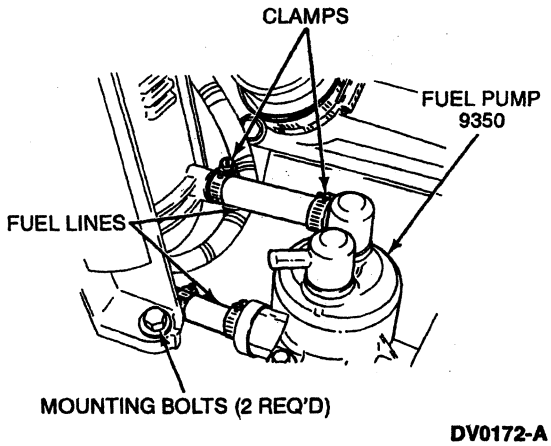

DV0172-A

12. Disconnect the electrical connector on the fuel filter / heater / water separator assembly.
13. NOTE: Position the fuel filter / heater / water separator assembly aside to gain access to the clamp attaching the drain hose to the fuel filter / heater / water separator assembly.

    Loosen the clamp and remove the drain hose from the fuel filter / heater / water separator assembly.
14. Remove the fuel filter / heater / water separator assembly from the vehicle.

Installation

1. Follow the removal procedure in reverse order.

Fuel Control, Manifold

Removal

1. Remove the fuel filter / heater / water separator assembly. Refer to Fuel Filter / Heater / Water Separator in the Removal and Installation portion of this section.
2. Remove the snap ring retaining the bypass fuel line to the fuel control manifold.

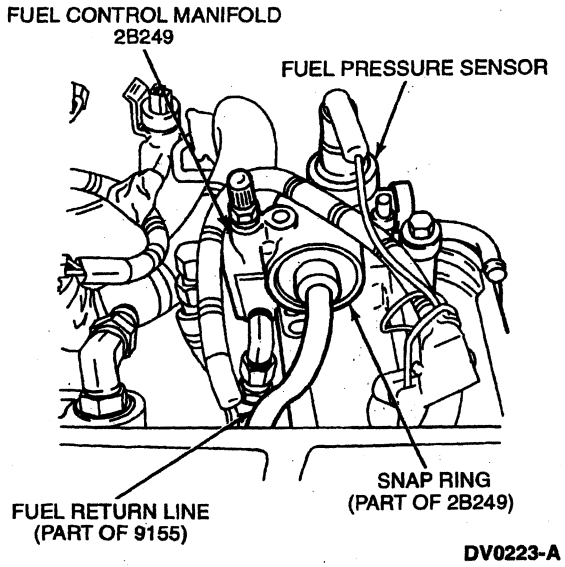

DV0223-A

3. Remove the bolts and the fuel control manifold from the fuel filter, heater, water separator.

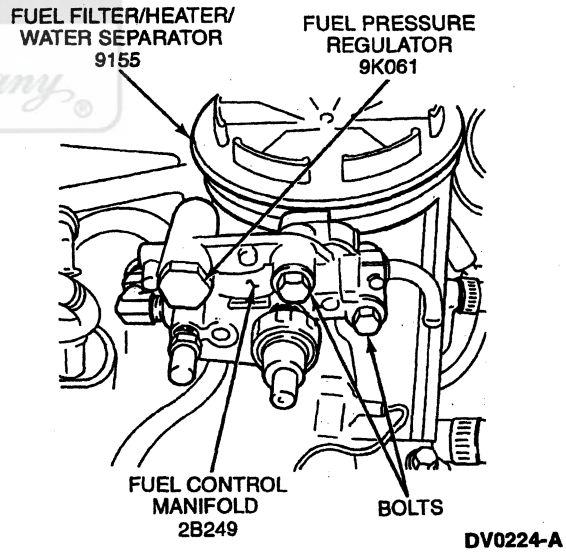

DV0224-A

Installation

1. Follow the removal procedure in reverse order.

Fuel Pressure Regulator

Removal

1. Remove the air cleaner assembly and the air inlet tube. Refer to Section 03-12.

Licensed Product Ford Motor Company

REMOVAL AND INSTALLATION (Continued)

2. Remove the fuel pressure regulator cap, spring, and spool valve from the fuel control valve.

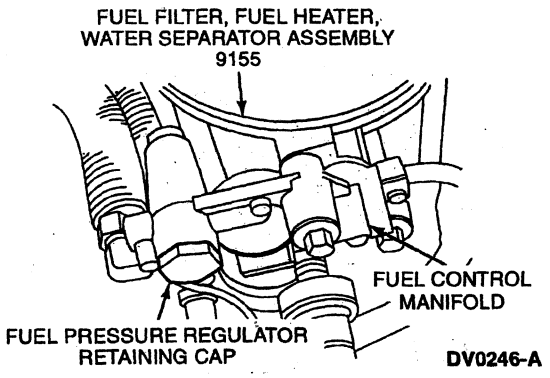

3. Thoroughly clean the fuel pressure regulator bore in the fuel control manifold.

Installation

1. Follow the removal procedure in reverse order.

Oil Pump, High-Pressure

Removal

1. Loosen the compressor manifold hose clamps and remove the compressor manifold.

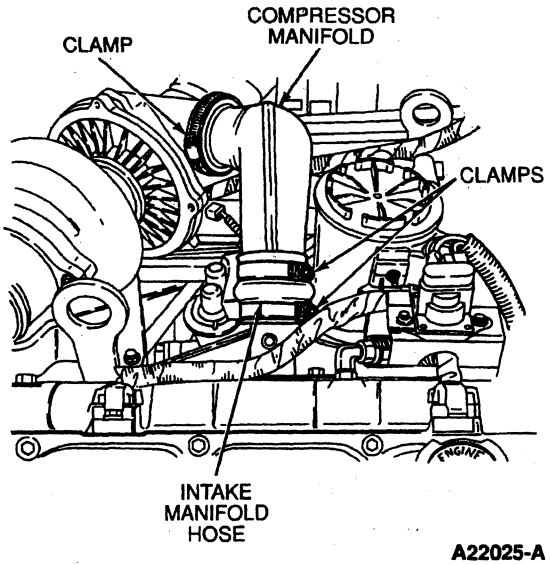

2. Remove the oil from the high-pressure oil pump reservoir using Rotunda Vacuum Tester 014-R1058 or equivalent.

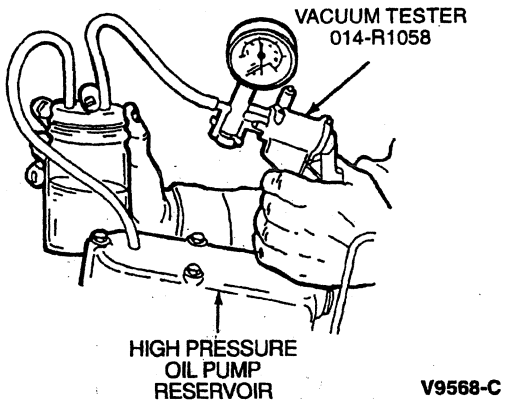

3. Remove the fuel filter (9155). Refer to Fuel Filter / Heater / Water Separator Assembly in the Removal and Installation portion of this section.
4. Remove the high-pressure manifold supply hoses from the high-pressure oil pump.

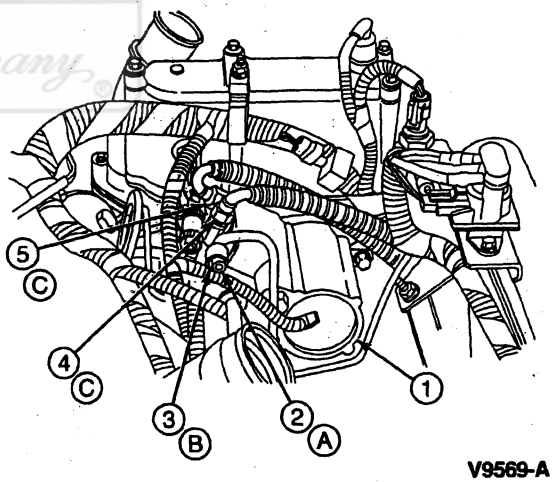

Item	Part Number	Description
1	9A543	High-Pressure Oil Pump
2	—	Nut (Part of 9C968)
3	9C968	Oil Pressure Regulator
4	9A332	High-Pressure Manifold Supply Hose (to RH Cylinder Head)
5	9A331	High-Pressure Supply Hose (to LH Cylinder Head)
A	—	Tighten to 6 N·m (53 Lb-In)
B	—	Tighten to 47 N·m (35 Lb-Ft)
C	—	Tighten to 26 N·m (19 Lb-Ft)

Official Licensed Product Motor Company

REMOVAL AND INSTALLATION (Continued)

5. Disconnect wire connector from oil pressure regulator.
6. Remove the bolts and cover plate at the crankcase front cover.
7. Remove the oil pump drive sprocket bolt and washer.

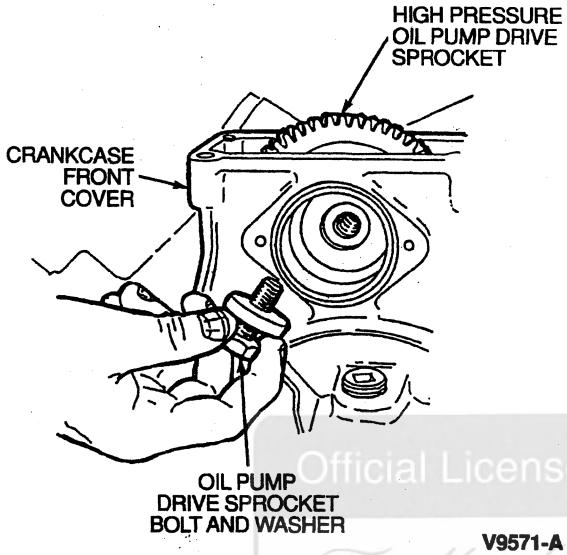

V9571-A

8. Remove the retaining bolts from oil reservoir.
9. Remove the high-pressure oil pump.
10. NOTE: If high pressure oil is to be replaced, remove the oil pressure regulator. Refer to Oil Pressure Regulator in the Removal and Installation portion of this section.

    Remove oil pressure regulator.

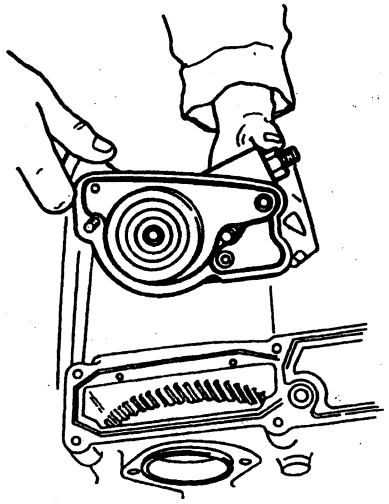

V9572-A

Installation

1. Install the high-pressure oil pump and gasket.
2. Tighten bolts to 22-27 N·m (16-20 lb-ft).
3. Install the retaining bolts to the oil reservoir.

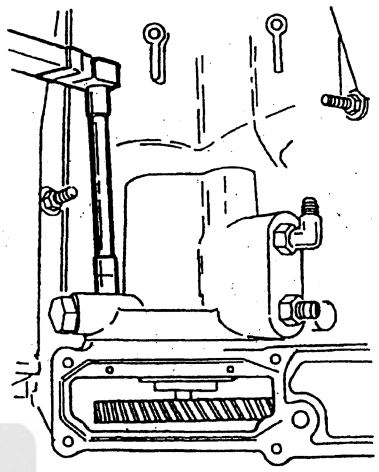

V9573-A

4. NOTE: Make sure the oil pump drive sprocket is fully seated on the shaft of the high-pressure oil pump before installing the bolt and washer or sprocket may not seat properly. The end of high-pressure oil pump shaft should be flush with the front face of the oil pump drive sprocket.

   NOTE: A binding oil pump drive sprocket can cause gear slippage and a no oil flow condition.

   Install the oil pump drive sprocket, bolt and washer. Tighten bolt to 129 N·m (95 lb-ft).

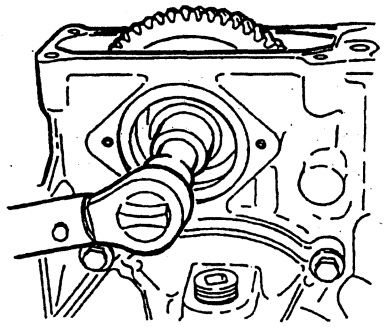

V9574-A

5. Apply RTV sealer to crankcase front cover and install cover plate and retaining bolts.
6. If removed, install oil pressure regulator. Tighten regulator to 47 N·m (35 lb-ft).
7. Connect wire connector to oil pressure solenoid.

Official Licensed Product
Ford Motor Company

REMOVAL AND INSTALLATION (Continued)

8. Install high-pressure manifold supply hoses to high-pressure oil pump. Tighten hose fittings to 26 N·m (19 lb-ft).

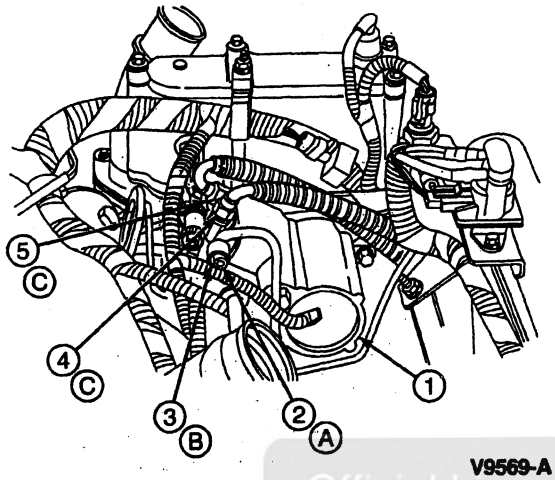

V9569-A

Item	Part Number	Description
1	9A543	High-Pressure Oil Pump
2	—	Nut (Part of 9C968)
3	9C968	Oil Control Pressure Regulator
4	9A332	High-Pressure Manifold Supply Hose (to RH Cylinder Head)
5	9A331	High-Pressure Supply Hose (to LH Cylinder Head)
A	—	Tighten to 6 N·m (53 Lb-In)
B	—	Tighten to 47 N·m (35 Lb-Ft)
C	—	Tighten to 26 N·m (19 Lb-Ft)

9. Install the fuel filter. Refer to Fuel Filter / Heater / Water Separator Assembly in the Removal and Installation portion of this section.
10. Install compressor manifold. Refer to Section 03-04D.
11. Refill oil reservoir with clean engine oil.

Oil Pump Drive Gear and Oil Reservoir, High-Pressure

Removal

1. Remove the high-pressure oil pump. Refer to Oil Pump, High-Pressure, in the Removal and Installation portion of this section.
2. Remove the high-pressure oil pump reservoir retaining nut and bolts and position wiring harness aside.

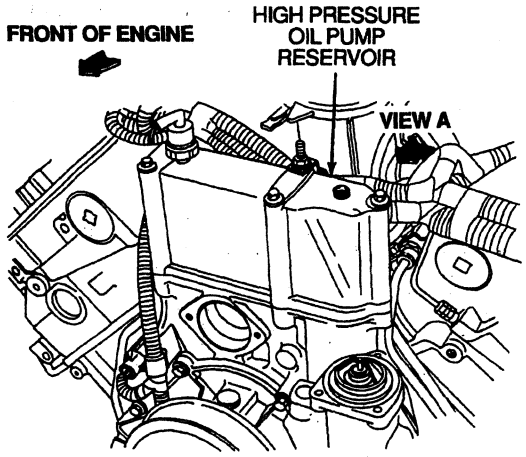

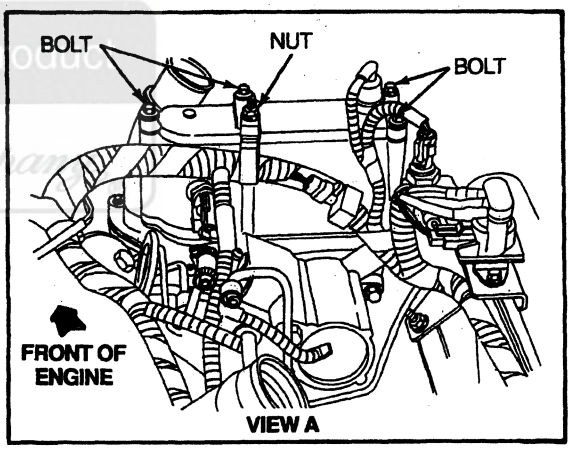

V9801-A

3. Remove the reservoir and disconnect the wire connectors from the sensors at the top and back of the reservoir.
4. Remove the high-pressure oil pump drive gear.
5. Inspect gear for damage. Service as required.
6. Clean mating surfaces of crankcase front cover, cover plate and reservoir.

Installation

1. Position the high-pressure oil pump drive sprocket into the crankcase front cover.
2. Install the high-pressure oil pump. Refer to Oil Pump, High-Pressure, in the Removal and Installation portion of this section.

Official Licensed Product

REMOVAL AND INSTALLATION (Continued)

3. NOTE: Make sure the oil pump drive sprocket is fully seated on the shaft of the oil pump before installing the bolt and washer, or sprocket may not seat properly. The end of high-pressure oil pump shaft should be flush with the front face of the oil pump drive sprocket.

   Install the oil pump drive sprocket, bolt and washer. Tighten bolt to 129 N·m (95 lb-ft).

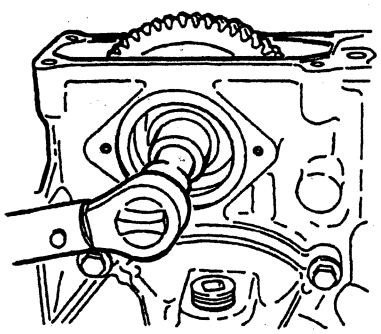

V9574-A

4. Check oil pump drive sprocket backlash as follows:
   a. Mount Dial Indicator Bracketry D78P-4201-F or equivalent and Dial Indicator D78P-4201-G or equivalent.
   b. Zero the dial indicator.
   c. Place dial indicator tip on drive sprocket tooth.
   d. Move drive sprocket by hand and record reading.
   e. If backlash reading exceeds 0.140-0.256 mm (0.0055-0.0101 in.), replace drive sprocket.

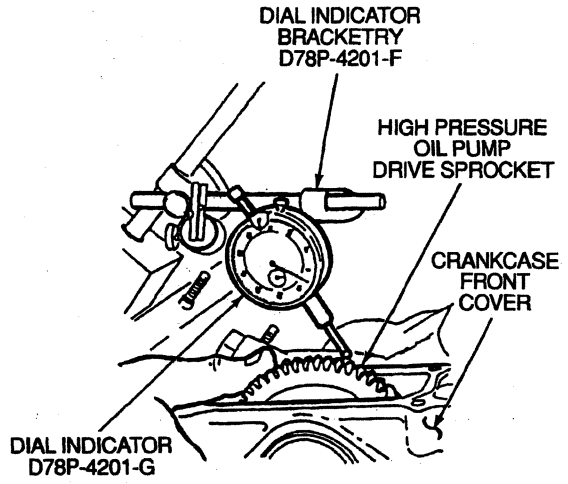

V9802-A

5. Apply RTV sealer to crankcase front cover and install cover plate and retaining bolts.
6. Install new gasket, sealant, and reservoir.

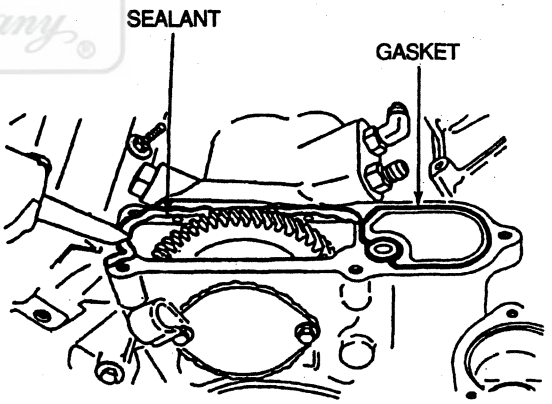

V9803-A

7. Install the oil reservoir retaining bolts.
8. Connect the sensors and harness clips.
9. Refill oil reservoir with clean engine oil.
10. Install compressor manifold and hose clamps. Tighten clamps securely.

Official Licensed Product Ford Motor Company

REMOVAL AND INSTALLATION (Continued)

Fuel Injector

SPECIAL SERVICE TOOL(S) REQUIRED

Description	Tool Number
Impact Slide Hammer	T50T-100-A
Injector Remover	T94T-9000-AH1
Injector Replacer	T94T-9000-AH2

Removal

1. **WARNING: RED-STRIPED WIRE HARNESS CARRIES 115V DC. SEVERE ELECTRICAL SHOCK MAY BE RECEIVED. DO NOT PIERCE.**

   CAUTION: Do not pierce engine electrical wires or damage to the harness can occur.

   CAUTION: Do not attempt to service the fuel injector (9F593). The fuel injector is serviced as an assembly. If the fuel injector is disassembled for any reason, the calibration of the fuel injector will be inaccurate.

   CAUTION: There are two different fuel injectors used in the 7.3L DI turbo diesel engine: a 49-state injector and the California injector (rate shaped injector). These two injectors must not be interchanged because the powertrain control modules are calibrated to the specific injector. Before replacing any injectors, refer to the Vehicle Emission Control Information (VECI) decal for proper injector selection. Failure to do so can cause poor engine performance, high emissions levels or damage to engine.

   Remove the valve cover (6582). Refer to Section 03-01C.
2. Disconnect the fuel injector electrical connector.
3. **WARNING: REMOVE OIL AND FUEL FROM CYLINDERS BEFORE REINSTALLING INJECTORS. FAILURE TO DO SO COULD CAUSE HYDROSTATIC LOCK RESULTING IN SEVERE ENGINE DAMAGE.**

   Remove the internal oil rail drain plugs in the cylinder head (6049) to drain the cylinder head.

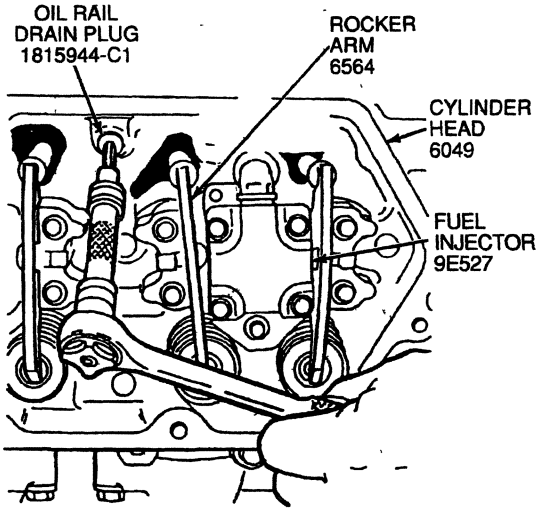

A22041-B

4. Remove the retaining screw and oil deflector. The shoulder bolt on the inboard side of the fuel injector does not require removal.

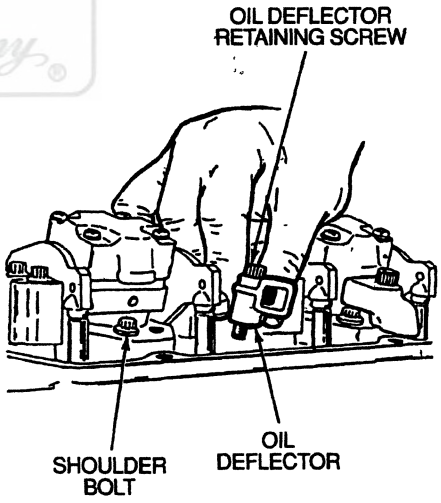

V9804-A

REMOVAL AND INSTALLATION (Continued)

5. Remove the outboard fuel injector retaining bolt.

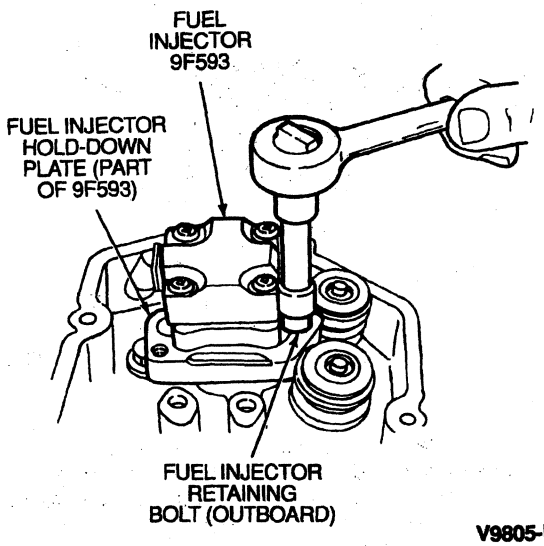

V9805-B

6. Remove the heater distribution box screws, nuts, and clip. Remove the outer half of the case (to service No. 7 fuel injector only).

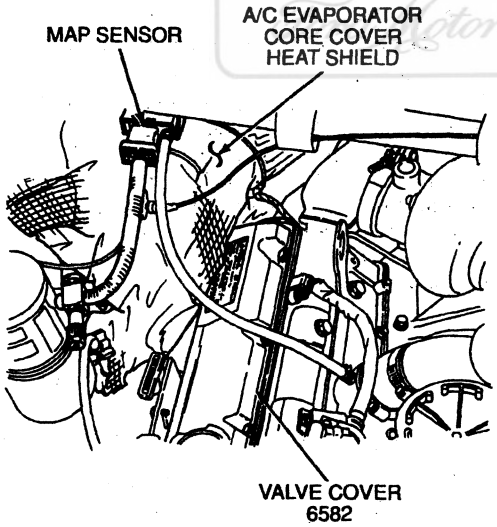

A22039-A

7. **CAUTION: When servicing the fuel injector, it is important that all three injector O-rings and the injector tip copper washer are retrieved from the injector bore. Failure to do so can cause severe damage to engine.**

   Carefully remove the fuel injector using Injector Remover T94T-9000-AH1.

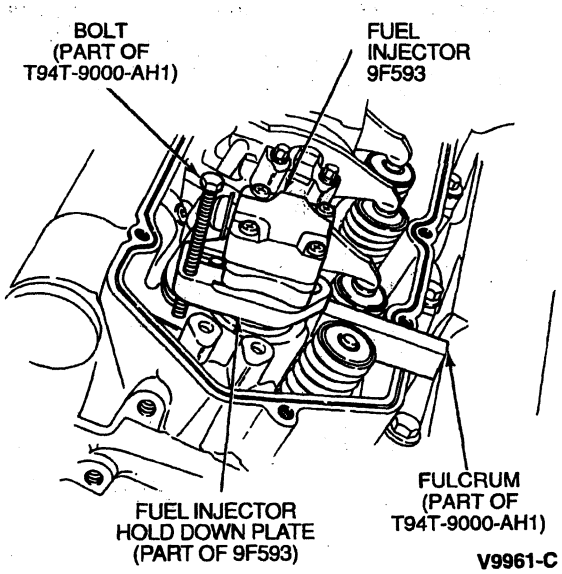

V9961-C

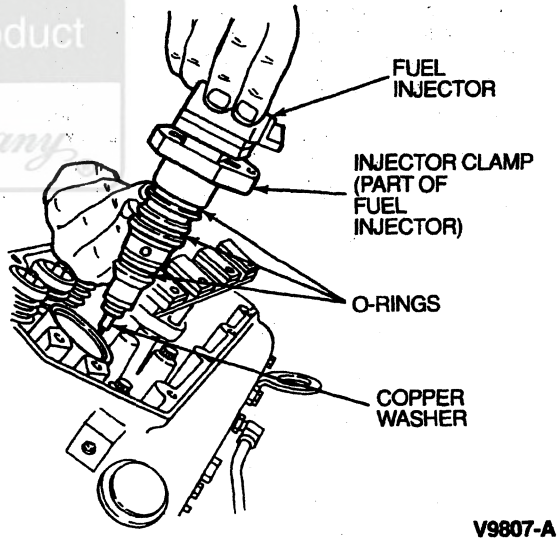

V9807-A

REMOVAL AND INSTALLATION (Continued)

8. Place fuel injector in Rotunda Injector Protective Sleeve 014-00933 or equivalent and set fuel injector in Rotunda Injector Holding Rack 014-00933 or equivalent.

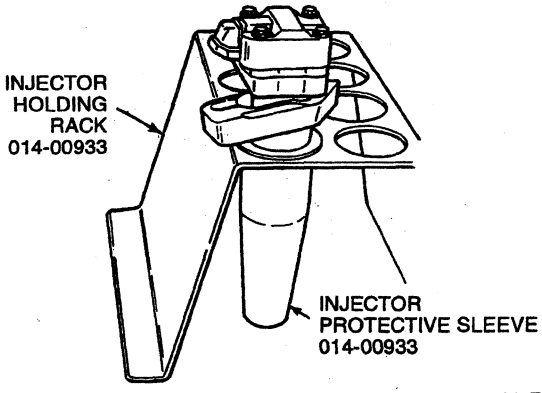

A23368-B

9. Remove fuel injector sleeves, if required. Rotunda Insert Injector Sleeve Tap Plug 014-00934 or equivalent into injector sleeve to prevent debris from entering the combustion chamber. Insert Rotunda Injector Sleeve Tap 014-00934 and Rotunda Injector Sleeve Tap Pilot 014-00934 or equivalents into fuel injector sleeve and tighten 1-1/2 - 2 turns. Attach Impact Slide Hammer T50T-100-A to Rotunda Injector Sleeve Tap 014-00934 and Rotunda Injector Sleeve Tap Pilot 014-00934 or equivalents and remove fuel injector sleeve from fuel injector bore.

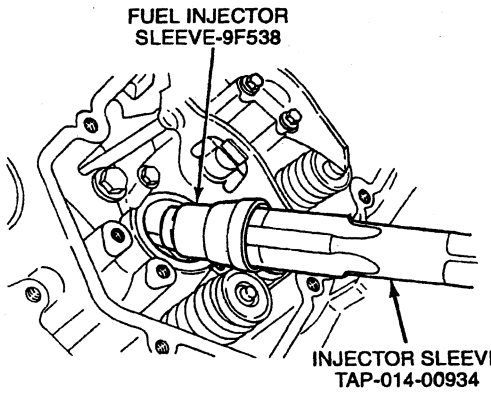

A23366-B

10. Use Rotunda Injector Sleeve Brush 014-00934-5 or equivalent to clean the injector bores of any sealant residue. Make sure to remove any debris.

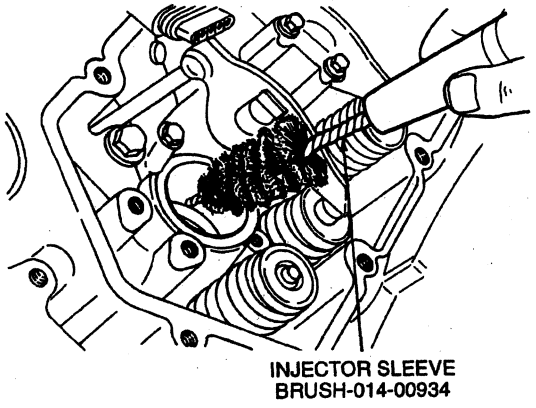

A23341-B

Installation

1. **CAUTION: There are two different fuel injectors used in the 7.3L DI turbo diesel engine: a 49-state injector and the California injector (rate shaped injector). These two injectors must not be interchanged because the powertrain control modules are calibrated to the specific injector. Before replacing any injectors, refer to the Vehicle Emission Control Information (VECI) decal for proper injector selection. Failure to do so can cause poor engine performance, high emissions levels or damage to engine.**

   If removed, install fuel injector sleeves using Rotunda Injector Sleeve Replacer 014-00934 or equivalent. Apply Threadlock® 262 E2FZ-19554-B or equivalent meeting Ford specification WSK-M2G351-A6 to the fuel injector sleeves as shown. Using a rubber mallet, tap on tool to seat fuel injector bore. Remove tool from fuel injector sleeve and clean any sealant residue from fuel injector bore.

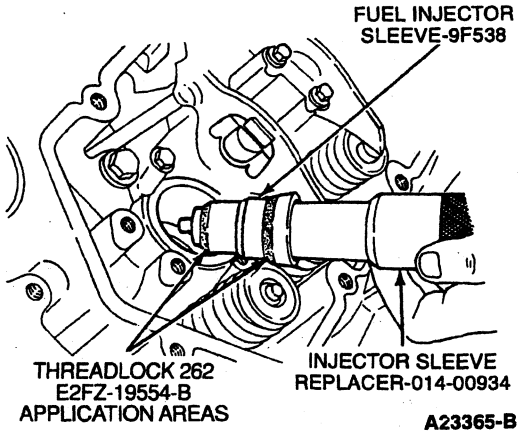

A23365-B

REMOVAL AND INSTALLATION (Continued)

2. To ensure a good seal for the fuel injector O-rings, clean fuel injector sleeve using Rotunda Injector Sleeve Brush 014-00934 and Rotunda Injector Sleeve Brush Set 014-00934 or equivalents. Clean any debris from fuel injector sleeve.

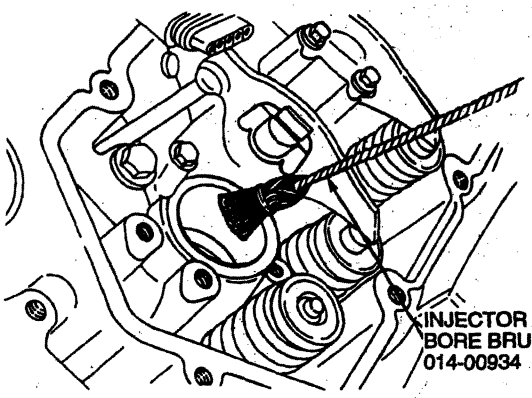

DV0295-A

3. Clean the injector bore and sleeve carefully with a clean shop towel.
4. Make sure a good seating surface is provided for the fuel injector. Use Injector Sleeve Brush 014-00934 or equivalent.

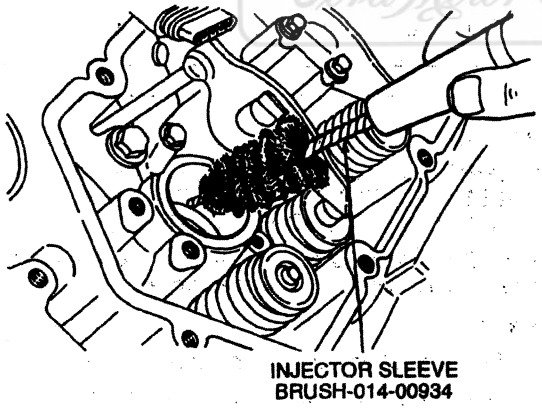

A23341-B

5. **WARNING: REMOVE OIL AND FUEL FROM CYLINDERS BEFORE REINSTALLING FUEL INJECTORS. FAILURE TO DO SO COULD CAUSE HYDROSTATIC LOCK RESULTING IN SEVERE ENGINE DAMAGE.**

   Lubricate the fuel injector and O-rings liberally with clean engine oil.

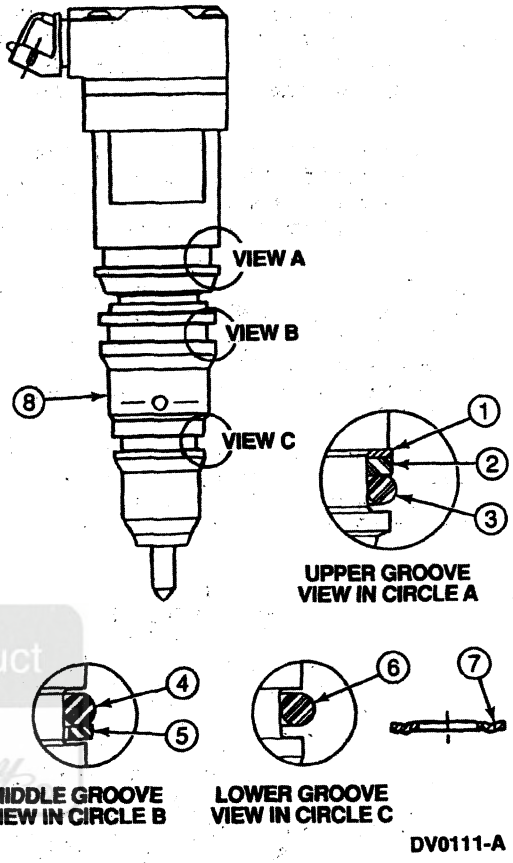

DV0111-A

Item	Part Identification	Description
1	Steel	Backup Ring (Part of 9F593)
2	Black	Cushion Ring (Part of 9F593)
3	Black	Upper Injector Seal (Part of 9F593)
4	White	Middle Injector Seal (Part of 9F593)
5	Black/Green	Cushion Ring (Part of 9F593)
6	Black	Lower Injector Seal (Part of 9F593)
7	Copper	Injector Gasket (Part of 9F593)
8	9F593	Fuel Injector

Official Licensed Product
Ford Motor Company

REMOVAL AND INSTALLATION (Continued)

6. **CAUTION: Do not strike top of fuel injector to seat fuel injector in bore. Damage to fuel injector will occur. Use hand pressure on top of fuel injector until fuel injector hold-down plate is positioned under head of shoulder bolt.**

   CAUTION: When installing the fuel injectors into the cylinder head, make sure the copper washer does not shift or fall free from the injector. Failure to do so will cause severe engine damage.

   NOTE: Apply a thin coat of High-Temperature 4x4 Front Axle and Wheel Bearing Grease E8TZ-19590-A or equivalent meeting Ford Specifications ESA M1C198-A to the copper washer to hold it in place during fuel injector installation.

   Install the fuel injector, with three new O-rings, backup ring and a new injector copper washer. Carefully install fuel injector using Injector Replacer T94T-9000-AH2.

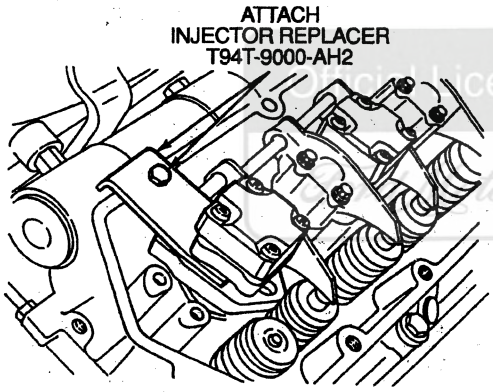

A23342-A

7. Install outer half of the heater distribution box and the retaining screws, nuts, and clip (to service No. 7 fuel injector only).
8. Install the oil deflector and bolt. Tighten bolt to 12 N·m (9 lb-ft).
9. Install the outboard injector retaining bolt. Tighten bolt to 12 N·m (9 lb-ft).
10. Install the oil rail drain plugs. Tighten oil rail drain plugs to 6 N·m (53 lb-in).
11. Connect the fuel injector electrical connector.
12. Install the valve cover. Refer to Section 03-01C.

Oil Pressure Regulator

Removal

1. Drain high-pressure oil pump reservoir.
2. Disconnect wire connector from oil pressure solenoid.
3. Remove oil pressure regulator from high-pressure oil pump.

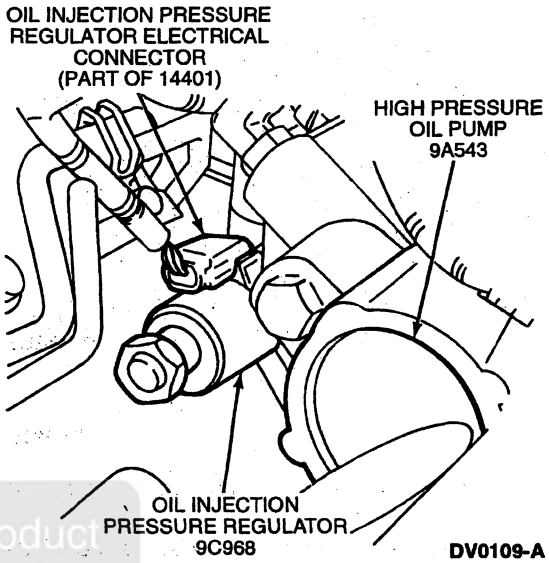

DV0109-A

Installation

1. Follow removal procedure in reverse order.
2. Tighten oil pressure regulator to 47 N·m (35 lb-ft).

Fuel Charging Wiring

WARNING: RED-STRIPED WIRE HARNESS CARRIES 115V DC. SEVERE ELECTRICAL SHOCK CAN BE RECEIVED. DO NOT PIERCE.

CAUTION: Do not pierce engine electrical wires or damage to the harness can occur.

Removal

1. Disconnect battery ground cables (14301).
2. Remove valve cover (6582). Refer to Section 03-01C.
3. Disconnect wire connectors from fuel injectors (9F593).

Ford Licensed Product

REMOVAL AND INSTALLATION (Continued)

4. Using long needle-nose pliers, remove wire connectors from glow plugs. Do not pull on wires when disconnecting glow plug wire connectors.

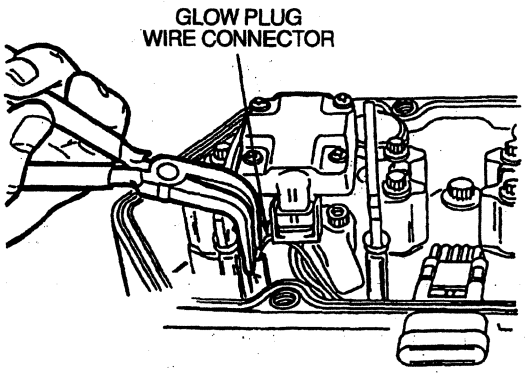

V9810-A

5. Disconnect wire connector from valve cover gasket (6584) using care not to damage valve cover gasket.
6. Remove fuel charging wiring.

Installation

1. NOTE: When the battery (10655) has been disconnected and reconnected, some abnormal drive symptoms may occur while the powertrain control module (PCM)(12A650) relearns its adaptive strategy. The vehicle may need to be driven 16 km (10 miles) or more to relearn the strategy.

   Follow removal procedure in reverse order.

Fuel Pump

NOTE: The following procedure is for both the 49-state and California fuel pumps. Only the California fuel pump is shown. The 49-state fuel pump is similar.

Removal

1. Remove the turbocharger assembly. Refer to Section 03-04D.
2. Remove the fuel line banjo fitting bolt at fuel pump (9350).

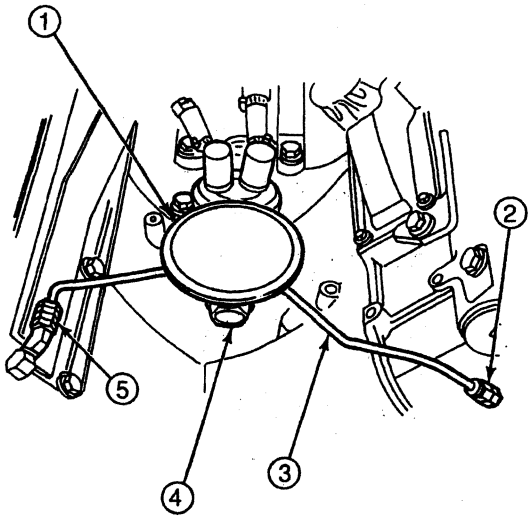

DV0239-A

Item	Part Number	Description
1	—	Fuel Pump Damper (California Only)
2	9350	Fuel Line Fitting Fuel Pump
3	9A564	Fuel Supply Line Assy
4	9R549	Banjo Bolt
5	6N653	Turbocharger O-ring Seal

3. Loosen the two hose clamps at the fuel pump fittings.
4. Disconnect the water drain hose at the fuel filter (9155).
5. Remove the fuel filter retaining bolts and position the fuel filter forward.
6. Remove the two fuel pump retaining bolts and lift the fuel pump up out of the crankcase bore.
7. Remove the fuel pump tappet from the crankcase bore.

Installation

1. Rotate the engine so the fuel pump cam eccentric is on the base circle to ease the installation and prevent possible damage of the fuel pump.
2. Install the fuel pump tappet in the base of the fuel pump.

Official Licensed Product

REMOVAL AND INSTALLATION (Continued)

3. Replace the O-ring on the fuel pump base.

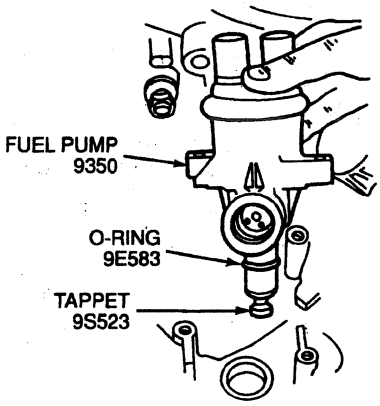

V9809-B

4. Install the fuel pump and retaining bolts. Tighten bolts evenly.
5. Connect the two fuel hoses at the front of the fuel pump.
6. Install the fuel filter and connect the water drain hose.
7. Tighten the fuel line clamps.
8. Install the fuel damper assembly with new seal rings at the rear of the fuel pump, securing it with the banjo bolt. Tighten banjo bolt to 54 N·m (40 lb-ft).
9. Install the turbocharger assembly. Refer to Section 03-04D.

Fuel Pulse Damper, California Vehicles Only

Removal

1. Remove the turbocharger. Refer to Section 03-04D.
2. Disconnect the fuel lines from the back of the cylinder heads (6049) retaining the fuel pulse damper to the fuel pump.
3. Remove the banjo bolt (04688) retaining the fuel pulse damper to the fuel pump.
4. NOTE: Be sure to retrieve the two seals for the fuel pulse damper. Failure to do so can cause a fuel leak between the pulse damper and the fuel pump.

   Remove the fuel pulse damper and seals from the fuel pump.

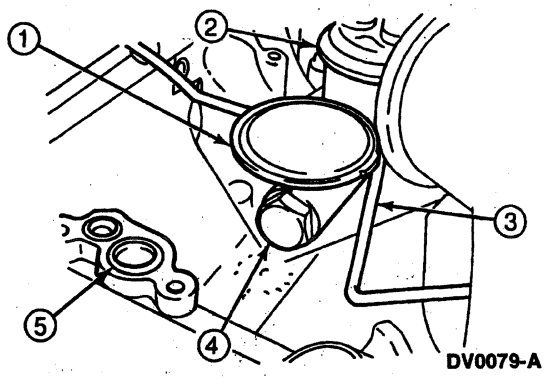

DV0079-A

Item	Part Number	Description
1	—	Fuel Pump Damper (California Only)
2	9350	Fuel Pump
3	9A564	Fuel Supply Line
4	04688	Banjo Bolt
5	6N653	Turbo Pedestal O-Ring Seal

Installation

1. Position two new seals on the fuel pulse damper.
2. Position the fuel pulse damper on the fuel pump and tighten the banjo bolt to 54 N·m (40 lb-ft).
3. Position the two fuel supply lines on the back of the cylinder heads. Tighten the two fuel supply line fittings to 16 N·m (12 lb-ft).
4. **CAUTION: Clean all fuel residue from the engine compartment prior to installation of the turbocharger. Failure to do so can cause fire or explosion resulting in personal injury or damage to equipment.**

   Install the turbocharger. Refer to Section 03-04D.

CLEANING AND INSPECTION

Coolant in Oil

Inspection

1. Plug in block heater (6A051) to warm coolant.
2. Drain engine oil and remove oil bypass filter (6714). Leave oil pan drain plug (6730) out of oil pan (6675).
3. Remove engine glow plugs. Refer to Section 03-07B.
4. Remove radiator cap (8100). Install Rotunda Cooling System Pressure Tester 014-R1072 or equivalent. Refer to Section 03-03 for cooling system pressure test.
5. Pressurize cooling system to 96.5 kPa (14 psi).
6. Inspect area around oil cooler (6A642) and oil filter adapters (6881) for evidence of coolant leaks.

Official Licensed Reprint
Ford Motor Company

CLEANING AND INSPECTION (Continued)

7. If leak is found at oil cooler, the oil cooler must be removed and pressure tested for internal leaks. Refer to Section 03-01C.
8. Inspect for coolant leaks at the oil pan plug bore.
9. If no leaks are found, remove oil pan. Inspect crankcase for pressure leaks.

Coolant in Oil

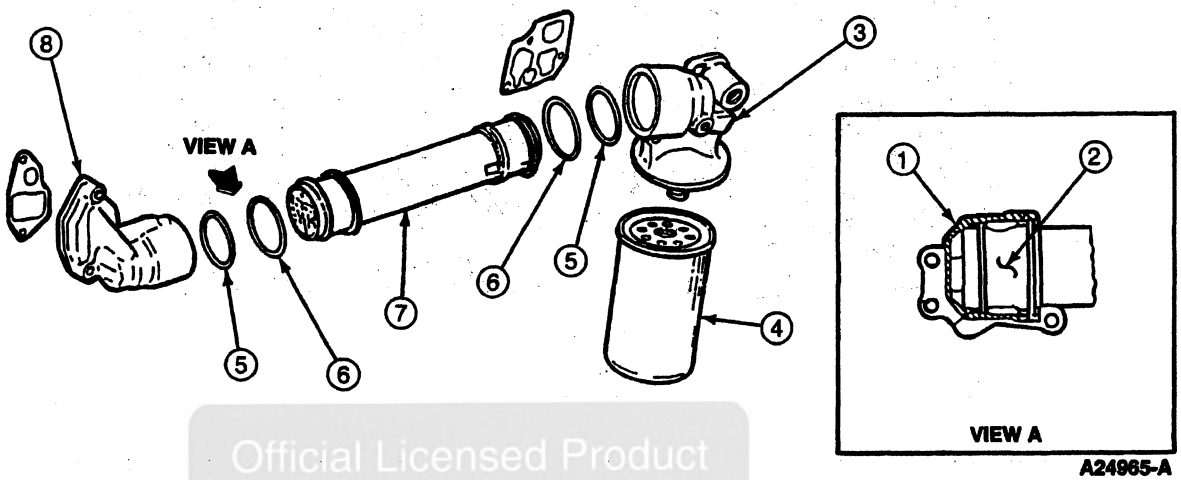

Official Licensed Product
Ford Motor Company

Item	Part Number	Description
1	—	Coolant Galley (Part of 6881)
2	—	Oil Flow Galley (Part of 6881)
3	6881	Oil Filter Adapter

(Continued)

Item	Part Number	Description
4	6714	Oil Bypass Filter
5	6C610	Inner O-Ring
6	6K649	Outer O-Ring
7	6A642	Oil Cooler
8	6881	Oil Filter Adapter

CLEANING AND INSPECTION (Continued)

10. Inspect cylinder heads (6049) for coolant leaks.

Coolant Leak Inspection Point — Cylinder Head

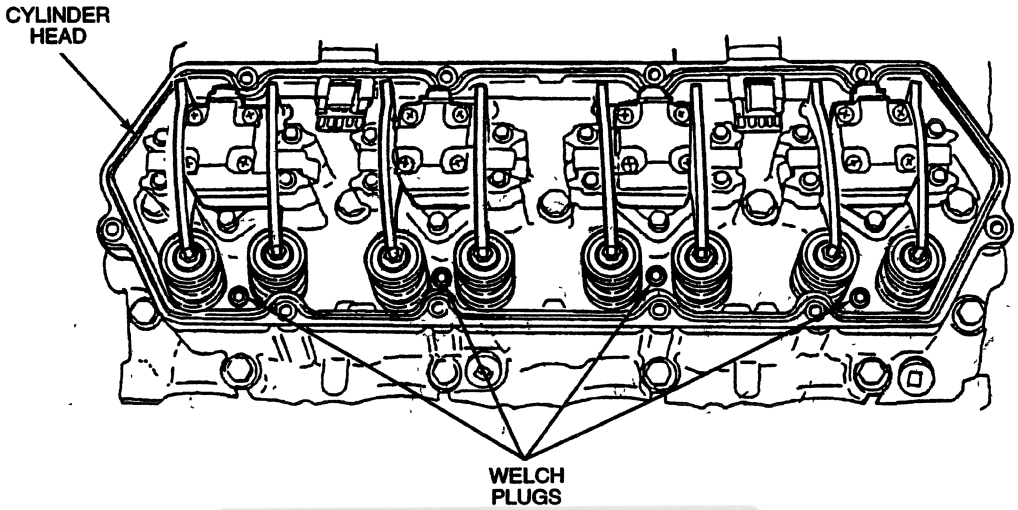

Official Licensed Product

11. If coolant leak still has not been found, remove the engine front cover (6019). Refer to Section 03-01C. Inspect gaskets and sealing surfaces.

Coolant Leak Inspection Points — Front Cover

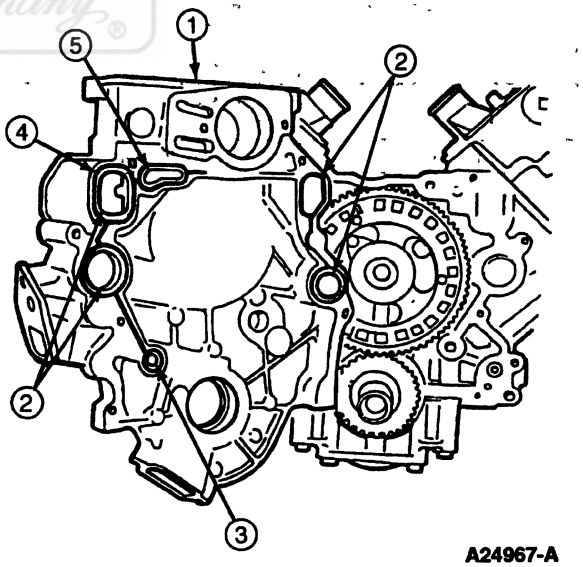

Item	Part Number	Description
1	6019	Engine Front Cover
2	—	Water Galleys (Part of 6019)
3	—	Oil Outlet Galley (Part of 6019)
4	6020	Front Cover Gasket
5	—	Oil Inlet Galley (Part of 6019)

CLEANING AND INSPECTION (Continued)

12. Service as required. Retest for leaks.

Fuel in Coolant Leak

Inspection

1. Plug in block heater (6A051) to warm coolant.
2. Remove fuel return hoses (9D308) from fuel *pressure regulator*.
3. Remove radiator cap (8100). Install Rotunda Cooling System Pressure Tester 014-R1072 or equivalent. Refer to Section 03-03 for cooling system pressure test.
4. Pressurize cooling system to 96.5 kPa (14 psi).
5. Inspect fuel return hoses for fuel or air discharge. The fuel return line that shows evidence of fuel or air discharge indicates which injector bank has a leak.
6. Remove fuel injectors (9F593) from suspect bank. Refer to Fuel Injector in the Removal and Installation portion of this section.
7. With the cooling system pressurized, observe upper injector sleeve to cylinder head fit for evidence of leakage.
8. If leakage is detected, service as required. Retest for leaks.

Fuel in Coolant

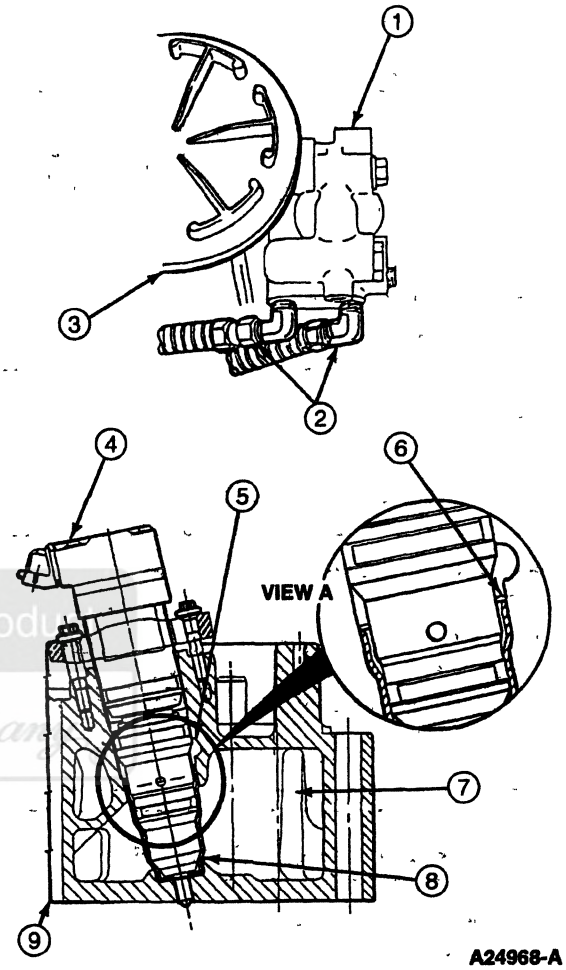

Item	Part Number	Description
1	2B249	Fuel Control Manifold
2	9D308	Fuel Return Hoses
3	9155	Fuel Filter/Heater/ Separator
4	9F593	Fuel Injector
5	—	Fuel Gallery (Part of 6049)
6	—	Leak Point (Injector Sleeve to Cylinder Head)
7	—	Coolant Galley (Part of 6049)
8	—	Injector Sleeve (Part of 6049)
9	6049	Cylinder Head

Official Licensed Product
Ford Motor Company

ADJUSTMENTS

Idle Speed

The idle speed is not adjustable.

SPECIFICATIONS

TORQUE SPECIFICATIONS

Description	N·m	Lb-Ft	Lb-In
Oil Pump Drive Sprocket Retaining Bolt	129	95	—
Oil Pressure Regulator	47	35	—
High Pressure Manifold Supply Hose Fittings	26	19	—
Oil Deflector Retaining Bolt	12	9	—
Fuel Injector Retaining Bolt	12	9	—
Oil Rail Drain Plug	6	—	53
Fuel Line Banjo Fitting	54	40	—
Fuel Line Fittings	16	12	—
Oil Pump and Gasket Bolts	22-27	16-20	—

LUBRICANT/ADHESIVE/CLEANER SPECIFICATIONS

Description	Part Number	Ford Specification
Threadlock® 262	E2FZ-19554-B	WSK-M2G351-A6
High-Temperature 4x4 Front Axle and Wheel Bearing Grease	E8TZ-19590-A	ESA-M1C198-A

SPECIAL SERVICE TOOLS/EQUIPMENT

SPECIAL SERVICE TOOLS REQUIRED

Tool Number/ Description	Illustration
T50T-100-A Impact Slide Hammer	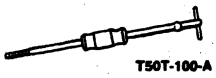 T50T-100-A
T90T-9550-B Fuel Line Disconnect Tool (5/16 Inch)	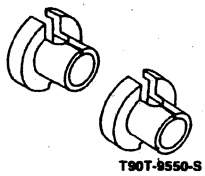 T90T-9550-S

(Continued)

SPECIAL SERVICE TOOLS REQUIRED (Cont'd)

Tool Number/ Description	Illustration
T90T-9550-C Fuel Line Disconnect Tool (3/8 Inch)	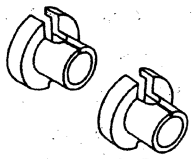 T90T-9550-S
T94T-9000-AH1 Injector Remover	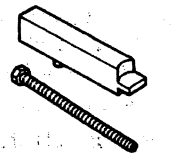 T94T-9000-AH1
T94T-9000-AH2 Injector Replacer	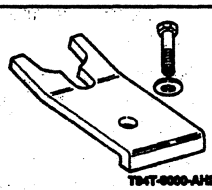 T94T-9000-AH2

SPECIAL SERVICE TOOLS DESIRED

Tool Number	Description
D78P-4201-F	Dial Indicator Bracketry
D78P-4201-G	Dial Indicator

ROTUNDA EQUIPMENT

Model	Description
014-00933	Diesel Injector Holding Rack
014-00934	Diesel Engine Injector Sleeve Set
014-R1058	Vacuum Tester
014-R1072	Cooling System Pressure Tester

Official Licensed Product Ford Motor Company

SECTION 03-04D Turbocharger, 7.3L Diesel Engine

SUBJECT	PAGE
VEHICLE APPLICATION	03-04D-1
DESCRIPTION AND OPERATION	
Air Intake Manifold	03-04D-2
Air-Fuel/Exhaust Gas Flow	03-04D-2
Center Housing	03-04D-2
Compressor	03-04D-2
Turbine	03-04D-1
Turbocharger System	03-04D-1
DIAGNOSIS AND TESTING	
Component Tests	03-04D-6
Bearing Clearance Check	03-04D-6
Check Axial End Play	03-04D-7
Check for Free Rotation	03-04D-6
Turbocharger Internal Oil Leak Test	03-04D-6
DIAGNOSIS AND TESTING (Cont'd.)	
Turbocharger Leak Test	03-04D-6
Pinpoint Test	03-04D-5
Symptom Chart	03-04D-5
Turbocharger	03-04D-4
REMOVAL AND INSTALLATION	
Air Inlet Tube	03-04D-9
Air Intake Hose	03-04D-9
Exhaust Inlet Adapter	03-04D-10
Turbocharger	03-04D-7
DISASSEMBLY AND ASSEMBLY	
Turbocharger	03-04D-10
SPECIFICATIONS	03-04D-13
SPECIAL SERVICE TOOLS/EQUIPMENT	03-04D-13

VEHICLE APPLICATION

F-250 Heavy Duty, F-350 and F-Super Duty

DESCRIPTION AND OPERATION

Ford Motor Company Official Licensed Product

Turbocharger System

The turbocharger can be identified by the turbocharger I.D. plate.

Turbocharger I.D. Plate

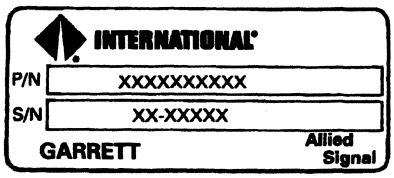

A20421-A

The turbine and compressor wheels are mounted on opposite ends of a common shaft. The wheels are enclosed by two housings, and the common shaft is enclosed by the center housing.

High-velocity engine exhaust gases drive the turbine wheel, which turns the common shaft turning the compressor wheel at speeds up to 130,000 revolutions per minute. Air entering the compressor side of the turbocharger is compressed and delivered to the combustion chambers. This compressed air causes more engine power output, better fuel efficiency and better engine performance at higher altitudes.

The turbocharger is supplied with pressurized oil from the engine's main oil galley through a passage in the turbocharger pedestal. Oil then drains back through another passage in the turbocharger pedestal into the oil pan. This eliminates the need for external lubrication supply and return lines.

Split ring seals are installed at each end of the common shaft between the shaft bearing and wheel assembly to prevent lubricating oil from entering the turbine or compressor area.

The pressurized oil entering the turbocharger also serves to actuate the exhaust back pressure warm-up system. This system consists of an actuator and a butterfly valve. This system operates only during the cold weather warm-up cycle.

Turbine

The turbine is a centripetal (from outside to center), radial inflow mechanism consisting of a cast turbine wheel, wheel shroud, and a specially designed housing that encloses the wheel and directs the flow of exhaust gas through the turbine.

DESCRIPTION AND OPERATION (Continued)

Compressor

The compressor is a centrifugal, radial outflow mechanism consisting of a cast compressor wheel, a backplate assembly, and a specially designed housing that encloses the wheel and directs the flow of air through the compressor.

Center Housing

The center housing supports the compressor and turbine wheel shaft in a pair of identical bearings that contain oil holes for directing oil to the bearing bores and shaft journals. Passages drilled in the center housing direct oil supplied by the engine from the inlet port to oil grooves machined in the bearing bores, that align with holes in the bearings.

Air Intake Manifold

The air intake manifold is integral with the cylinder head. An intake manifold cover is secured over the integral air intake manifold to direct the compressed air from the compressor housing.

Air-Fuel/Exhaust Gas Flow

During operation of a turbocharged engine, exhaust gas from the engine exhaust manifold (9430) flows into the turbine. The exhaust gas pressure and the heat energy extracted from the gas cause the turbine wheel to rotate which, in turn, causes the compressor wheel to rotate.

The cooled and expanded exhaust gas leaving the turbine wheel is directed by the turbine housing to engine exhaust system, that expels it to atmosphere.

Rotation of the compressor wheel causes ambient air from the engine air cleaner to be drawn into the compressor housing, where it is compressed and delivered to appropriate ducting that delivers it to the integral air intake manifold.

Official Licensed Product
Ford Motor Company

DESCRIPTION AND OPERATION (Continued)

Garrett TP-38 Turbocharger

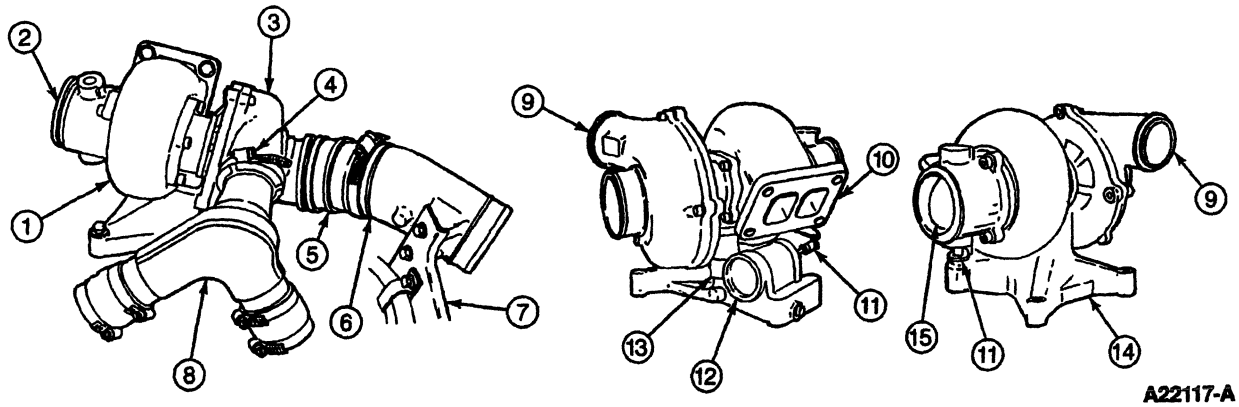

Item	Part Number	Description
1	—	Turbine Housing (Part of 6K682)
2	—	Exhaust Back Pressure Control Valve (Part of 6K682)
3	—	Compressor Housing (Part of 6K682)
4	8287	Clamp
5	9C681	Air Intake Hose
6	1820052C92	Air Intake Tube
7	6K864	Air Inlet Bracket
8	6K889	Compressor Manifold
9	—	Compressor Outlet (Part of 6K682)

(Continued)

Item	Part Number	Description
10	—	Exhaust Inlet Flange (Part of 6K682)
11	—	Exhaust Back Pressure Control Linkage (Part of 6K682)
12	6F089	Exhaust Back Pressure Control Actuator
13	—	Exhaust Back Pressure Control Solenoid (Part of 6K682)
14	6N639	Turbocharger Pedestal Assy
15	—	Exhaust Back Pressure Control Valve (Part of 6K682)

Licensed Product Ford Motor Company

DESCRIPTION AND OPERATION (Continued)

Turbocharger and Induction System

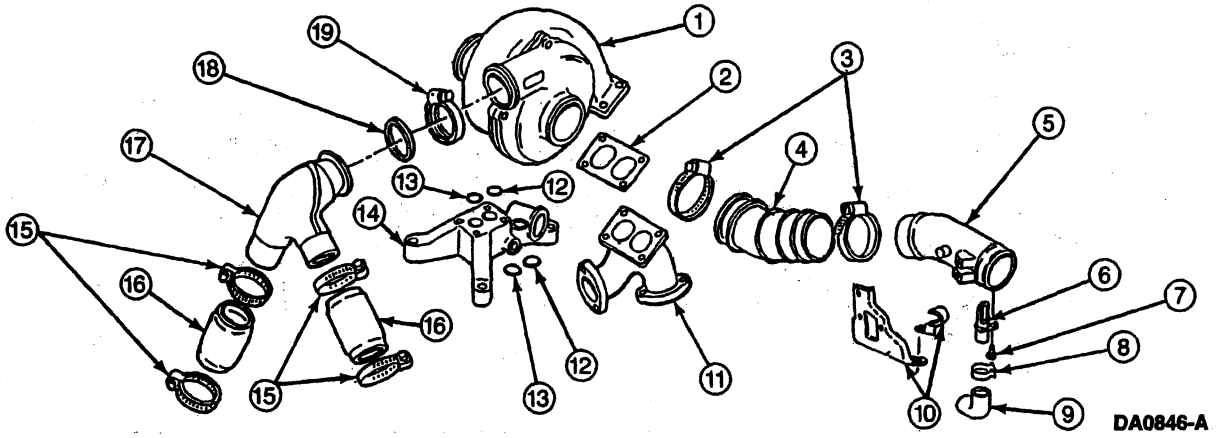

Item	Part Number	Description
1	6K682	Turbocharger
2	6N640	Turbocharger Exhaust Inlet Adapter Gasket
3	8287	Clamp (2 Required)
4	9C681	Air Intake Hose
5	1820052C92	Air Intake Tube
6	1820056C2	Compressor Inlet Duct (Pilot) Tube
7	30841R1	Compressor Inlet Duct (Pilot) Tube Screw
8	—	Breather Hose Elbow Clamp (Part of 1816030C2)
9	1816030C2	Breather Hose Elbow
10	6K864	Air Inlet Bracket

(Continued)

Item	Part Number	Description
11	6K854	Turbocharger Exhaust Inlet Adapter
12	—	Turbocharger Oil Supply O-Ring (2 Required) (Part of 6K682)
13	—	Turbocharger Oil Drain O-Ring (2 Required) (Part of 6K682)
14	6N639	Turbocharger Pedestal Assy
15	8287	Clamp (4 Required)
16	1820075C1	Intake Manifold Hose (2 Required)
17	6K889	Compressor Manifold
18	9E436	Turbocharger Compressor Outlet Seal
19	8287	Clamp

DIAGNOSIS AND TESTING

Turbocharger

Refer to the 1996 Powertrain Control / Emissions Diagnosis Manual[1] for diagnosis and testing procedures not covered.

1 Can be purchased as a separate item.

DIAGNOSIS AND TESTING (Continued)

Symptom Chart

TURBOCHARGER DIAGNOSIS

Condition	Possible Source	Action
• No Boost	• Compressor air intake hose collapsed. • Intake manifold hoses leaking. • Turbocharger turbine or compressor wheel damaged. • Turbocharger bearings seized. • Clogged air cleaner element or restriction upstream of compressor.	• SERVICE as required. • TIGHTEN hose clamps. • REPLACE turbocharger. REFER to Turbocharger in the Removal and Installation portion of this section. • REPLACE turbocharger. REFER to Turbocharger in the Removal and Installation portion of this section. • SERVICE as required.
• Lack of Power	• Engine. • Low compression. • Clogged air cleaner element or restriction upstream of compressor. • Insufficient fuel supply. • Restriction.	• REFER to the 1996 Powertrain Control/Emissions Diagnosis Manual.[2] • SERVICE as required. • REFER to the 1996 Powertrain Control/Emissions Diagnosis Manual.[2]
• Excessive Fuel Consumption (Black Exhaust Smoke)	• High fuel pressure. • Pressure regulator. • Fuel return line plugged or kinked. • Injectors leaking. • Powertrain control module not functioning properly.	• SERVICE as required. REFER to the 1996 Powertrain Control/Emissions Diagnosis Manual.[2] • CLEAN or REPLACE as required. • REFER to the 1996 Powertrain Control/Emissions Diagnosis Manual.[2]
• Excessive Oil Consumption (Blue, Gray, or White Exhaust Smoke)	• Incorrect type or grade of oil. • Extended oil change intervals. • Clogged air cleaner element or restriction upstream of compressor. • Engine wear (piston rings, valve guides). • Turbocharger oil seals leaking. • Injector or injector O-ring leaking.	• DRAIN and FILL with specified oil. • CHANGE oil as recommended. • SERVICE as required. • SERVICE as required. • REFER to Pinpoint Test A.
• Noise or Vibration	• Leaks at turbocharger inlet and outlet connections. • Foreign object damage to turbine or compressor blades. • Turbine bearing failure.	• SERVICE as required. • REPLACE turbocharger. REFER to Turbocharger in the Removal and Installation portion of this section. • REPLACE turbocharger. REFER to Turbocharger in the Removal and Installation portion of this section.
• High Boost	• Leak in exhaust system before muffler.	• SERVICE as required.

Pinpoint Test

PINPOINT TEST A: EXHAUST SMOKY — INTERNAL OIL LEAKS

Test Step		Result ▶	Action to Take
A1	CHECK COMPRESSOR OUTLET		
	• Check compressor outlet for evidence of oil. • **Is there oil present?**	Yes ▶ No ▶	GO to A2. GO to A5.

2 Can be purchased as a separate item

DIAGNOSIS AND TESTING (Continued)

PINPOINT TEST A: EXHAUST SMOKY — INTERNAL OIL LEAKS (Continued)

Test Step		Result	Action to Take
A2	CHECK COMPRESSOR INLET		
	• Check turbine for evidence of oil. • **Is there oil present?**	Yes ▶	Turbocharger OK. CHECK crankcase breather assembly for proper operation.
		No ▶	GO to **A3**.
A3	CHECK FOR OIL SUPPLY RESTRICTION		
	• Check for restriction in the turbocharger oil supply path in the turbocharger pedestal assembly and the cylinder block. • **Is there a restriction?**	Yes ▶	SERVICE as required.
		No ▶	GO to **A4**.
A4	CHECK FOR OIL RETURN RESTRICTION		
	• Check for restriction in the turbocharger oil return path in the turbocharger pedestal assembly and the cylinder block. • **Is there a restriction?**	Yes ▶	SERVICE as required.
		No ▶	REPLACE turbocharger. REFER to Turbocharger in the Removal and Installation portion of this section.
A5	CHECKING TURBINE OUTLET		
	• Check turbine outlet for evidence of oil. • **Is there oil present?**	Yes ▶	GO to **A6**.
		No ▶	Turbocharger OK. If exhaust is smoky, condition is elsewhere in vehicle. REFER to the 1996 Powertrain Control/Emissions Diagnosis Manual.[3]
A6	CHECK TURBINE INLET		
	• Check turbine inlet for evidence of oil. • **Is there oil present?**	Yes ▶	Condition internal in engine.
		No ▶	GO to **A4**.

Official Licensed Product Ford Motor Company

Component Tests

Turbocharger Leak Test

Check for loose connections or damage to air intake hoses and tubes.

Air leaks at the compressor manifold, intake manifold hoses or intake manifold covers could cause excessive smoke, loss of engine power or a noise problem.

Exhaust leaks at the exhaust manifolds or in the turbine housing will also cause loss of engine power and a noise problem.

Inspect turbocharger and components for loose connections or damage. Using a liquid soap on hose or tube connections will aid in leak detection.

Exhaust leaks can usually be detected audibly or visually by a discoloration caused by escaping hot exhaust gases.

Turbocharger Internal Oil Leak Test

Check turbocharger turbine inlet for evidence of oil. If oil is present, this indicates that the failure is in the engine or in the crankcase breather, not in the turbocharger. Refer to Section 03-00 for engine component test.

Check turbocharger turbine outlet for evidence of oil. If oil is present, check the turbine inlet for oil. If no oil is present in the turbine outlet, refer to the Powertrain Control/Emissions Diagnosis Manual.[3] If oil is present in the inlet, remove the turbocharger from the engine and examine the oil supply and return passages in the turbocharger pedestal and engine block for restriction. If no restriction is found, replace turbocharger.

Bearing Clearance Check

When bearing damage is suspected, verify using the following procedure.

Check for Free Rotation

NOTE: Turbine and compressor wheels must spin freely when turned by hand. No housing contact is permitted.

Press and rotate the radial shaft, then repeat from the opposite side. If either the compressor wheel or the turbine wheel contacted the housing, the bearings are bad, and the turbocharger should be replaced.

3 Can be purchased as a separate item

DIAGNOSIS AND TESTING (Continued)

Check Axial End Play

1. NOTE: Radial shaft movement cannot readily be measured on this turbocharger.

   NOTE: The turbocharger exhaust backpressure control valve must be removed to perform the Axial End Play test.

   Position the dial indicator on the turbine end of the radial shaft and zero the indicator.
2. Move the radial shaft back and forth by hand and record the reading. The reading must be within 0.02-0.10 mm (.00079-.00394 in.). If the reading exceeds the specification, the turbocharger should be replaced.

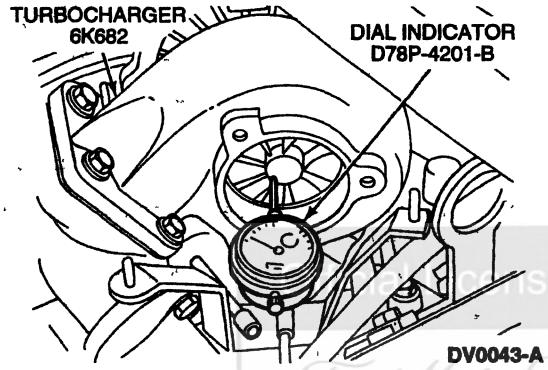

3. If readings exceed specifications, replace the turbocharger.

REMOVAL AND INSTALLATION

Turbocharger

SPECIAL SERVICE TOOL(S) REQUIRED

Description	Tool Number
Fuel/Oil/Turbo Protector Cap Set	T94T-9395-AH

Removal

1. Disconnect battery ground cables (14301).
2. Remove two air intake tube assembly bolts, clamps at turbocharger, crankcase breather assembly and engine air cleaner (ACL)(9600), and air intake tube and hoses.
3. Remove exhaust outlet marmon clamp from turbocharger.
4. Raise vehicle.
5. Remove engine charge exhaust pipe bolt from transmission, if so equipped.
6. Remove bolts and nuts from catalytic converter to engine charge exhaust pipe, if so equipped.
7. Loosen two bolts retaining turbocharger exhaust inlet pipe to left exhaust manifold (9430).
8. NOTE: This step applies only to automatic transmission.

   Remove bolts retaining left turbocharger exhaust inlet pipe to turbocharger exhaust inlet adapter.
9. Loosen two bolts retaining turbocharger exhaust inlet pipe to right exhaust manifold.

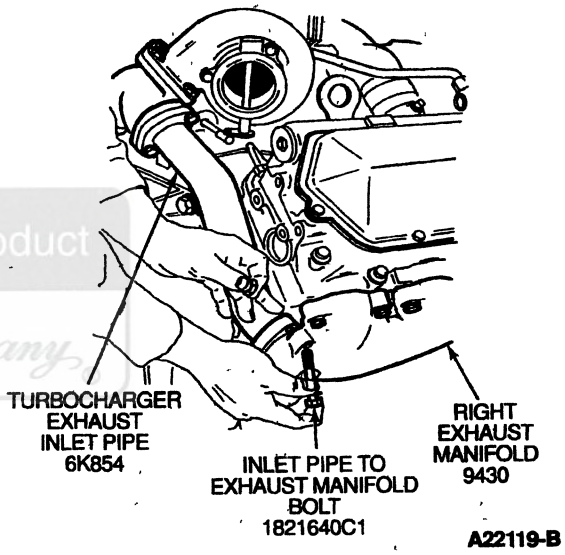

10. Remove lower bolt retaining right turbocharger exhaust inlet pipe to turbocharger exhaust inlet adapter.
11. Lower vehicle.
12. NOTE: This step applies only to automatic transmission.

    Remove upper bolts retaining right and left turbocharger exhaust inlet pipes to turbocharger exhaust inlet adapter.
13. Remove right engine lift hook and bolt.
14. Loosen air inlet hose clamp at turbocharger. Disconnect hose and lay aside.

Unlicensed Product
Ford Motor Company

REMOVAL AND INSTALLATION (Continued)

15. Loosen four intake manifold hose clamps, and one clamp retaining compressor manifold to turbocharger.

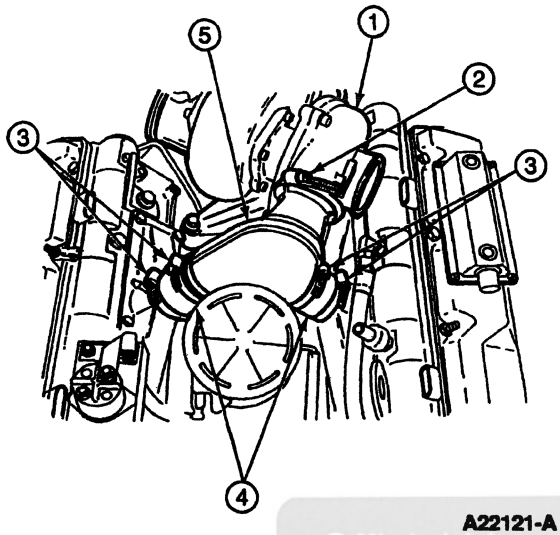

A22121-A

Item	Part Number	Description
1	—	Compressor Housing (Part of 6K682)
2	8287	Hose Clamp
3	8287	Manifold Hose Clamp
4	1820075C1	Intake Manifold Hose
5	6K889	Compressor Manifold

16. Remove compressor manifold.

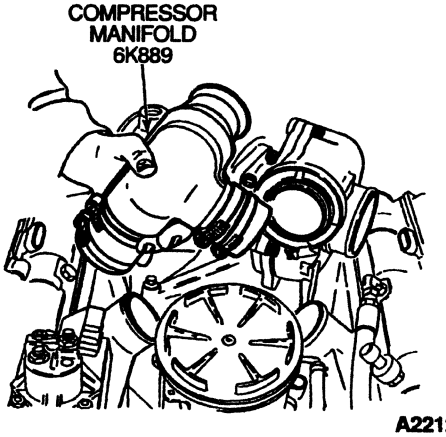

A22122-B

17. Remove four bolts retaining turbocharger pedestal assembly to cylinder block.

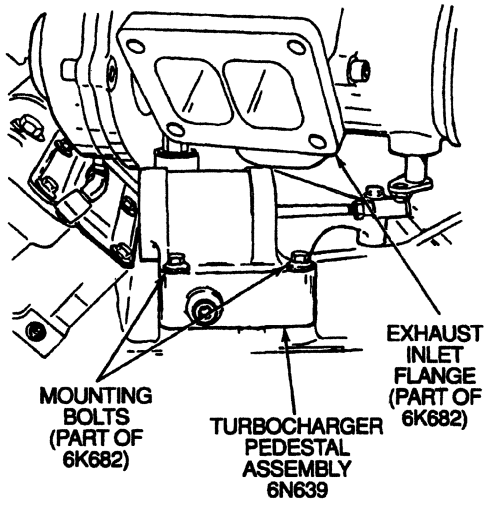

A22123-B

18. Remove turbocharger assembly and disconnect electrical connectors.
19. NOTE: If turbocharger is not being removed for service, install Fuel / Oil / Turbo Protector Cap Set T94T-9395-AH.

    Remove oil galley O-rings.

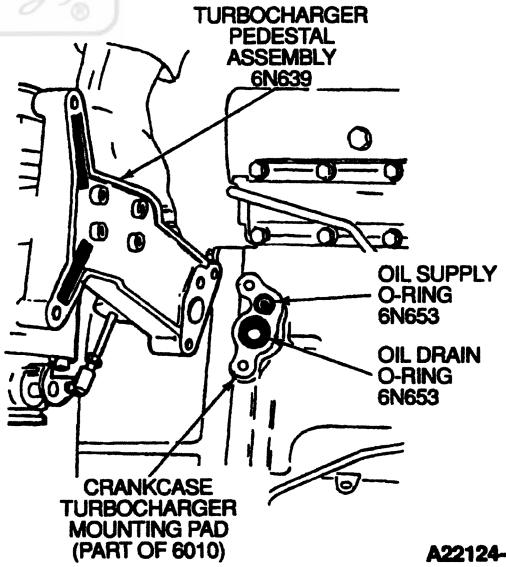

A22124-B

Installation

1. Install new oil galley O-rings.
2. Connect turbocharger electrical connectors and install turbocharger assembly.

Official Licensed Ford Motor Company

REMOVAL AND INSTALLATION (Continued)

3. Install four bolts retaining turbocharger pedestal assembly to engine block. Tighten to 24 N·m (18 lb-ft).

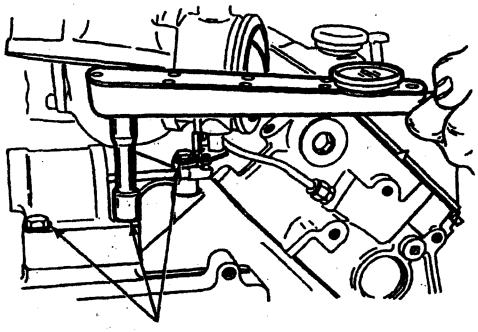

PEDESTAL ASSEMBLY TO ENGINE BLOCK BOLTS

A22125-A

4. Loosely install bolts retaining right and left turbocharger exhaust inlet pipes to turbocharger exhaust inlet adapter.
5. Install compressor manifold, intake manifold hoses and clamps. Make sure compressor outlet seal is in position.
6. Install right engine lift hook and bolt.
7. Raise vehicle.
8. Tighten two right and left lower bolts (retaining turbocharger exhaust inlet pipes to turbocharger exhaust inlet adapter) to 49 N·m (36 lb-ft).
9. Tighten four right and left bolts and nuts (retaining turbocharger exhaust inlet pipes to exhaust manifolds) to 49 N·m (36 lb-ft).
10. Install catalytic converter to engine charge exhaust pipe bolts and nuts.
11. Lower vehicle.
12. Tighten two right and left upper bolts (retaining turbocharger exhaust inlet pipes to turbocharger exhaust inlet adapter) to 49 N·m (36 lb-ft).
13. Install exhaust outlet marmon clamp to turbocharger.
14. Install air intake tube and hose assembly, two bolts and clamps.
15. Connect battery ground cable.

Air Intake Hose

Removal

1. Loosen clamps securing air intake hose to compressor housing and air intake tube.
2. Remove air intake hose and clamps.

Installation

1. Install air intake hose and clamps.
2. Tighten clamps securely.

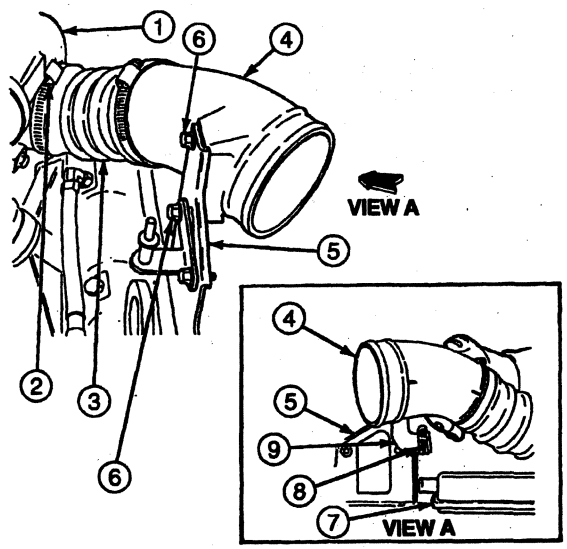

A23698-A

Item	Part Number	Description
1	—	Compressor Housing (Part of 6K682)
2	8287	Clamp
3	9C681	Air Intake Hose
4	1820052C92	Air Intake Tube
5	6K864	Air Inlet Bracket
6	—	Bolts (Part of 6K864)
7	6769	Crankcase Breather Assy
8	—	Clamp (Part of 1816030C2)
9	1816030C2	Crankcase Breather Hose

Air Inlet Tube

Removal

1. Loosen clamp and disconnect engine air cleaner duct tube adapter (9B676) from air intake tube.
2. Loosen clamp securing crankcase breather hose to crankcase breather assembly.
3. Remove bolts securing air intake tube to air inlet bracket.
4. Disconnect crankcase breather hose from crankcase breather assembly.
5. Loosen clamp and disconnect air intake tube from air intake hose and remove air intake tube.

Installation

1. Connect air intake hose to air intake tube.
2. Connect crankcase breather hose to crankcase breather assembly.
3. Position air intake tube to air intake tube support bracket and install retaining bolts. Tighten bolts securely.

Ford Motor Company

REMOVAL AND INSTALLATION (Continued)

4. Connect engine air cleaner duct tube adapter and clamp to air intake tube. Tighten clamp securely.
5. Tighten air intake hose clamp and crankcase breather hose clamp securely.

Exhaust Inlet Adapter

Removal

1. Raise vehicle.
2. Loosen nuts and bolts securing right and left turbocharger exhaust inlet pipes to exhaust manifolds.
3. Lower vehicle.
4. Remove bolts securing right and left turbocharger exhaust inlet pipes to turbocharger exhaust inlet adapter.
5. Remove bolts securing turbocharger exhaust inlet adapter to turbocharger.
6. Remove turbocharger exhaust inlet adapter and turbocharger exhaust inlet adapter gasket.
7. Clean gasket sealing surfaces.

Installation

1. Position turbocharger exhaust inlet adapter with new turbocharger exhaust inlet adapter gasket to turbocharger. Install retaining bolts and tighten to 49 N·m (36 lb-ft).
2. Position right and left turbocharger exhaust inlet pipes to turbocharger exhaust inlet adapter and install retaining bolts. Tighten bolts to 49 N·m (36 lb-ft).
3. Raise vehicle.
4. Tighten nuts and bolts securing right and left turbocharger exhaust inlet pipes to exhaust manifolds to 49 N·m (36 lb-ft).
5. Lower vehicle.

DISASSEMBLY AND ASSEMBLY

Turbocharger

SPECIAL SERVICE TOOL(S) REQUIRED

Description	Tool Number
Spring Scale	T74P-3504-Y

Disassembly

1. Remove four 12-point head screws from bottom of turbocharger pedestal assembly.

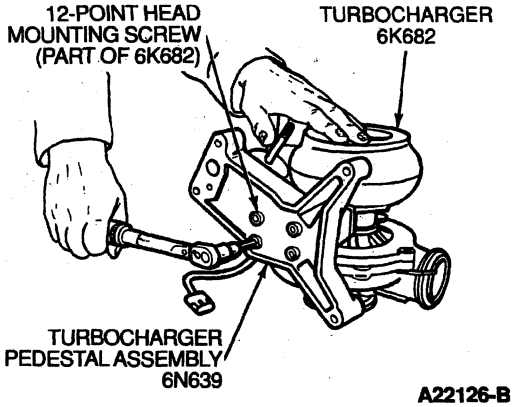

A22126-B

2. Remove and discard O-rings which seal oil passages to the turbocharger.

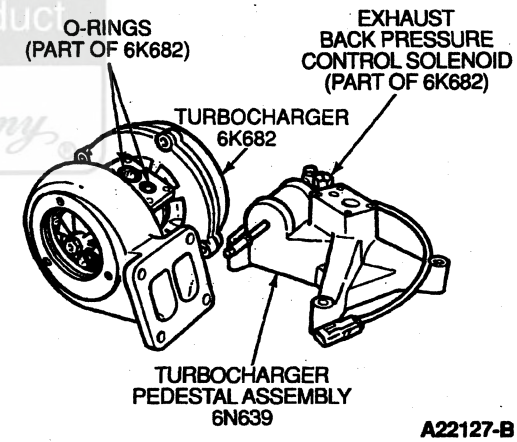

A22127-B

Official Licensed Product Ford Motor Company

DISASSEMBLY AND ASSEMBLY (Continued)

3. Mark turbine housing, center housing and compressor housing to facilitate reassembly.

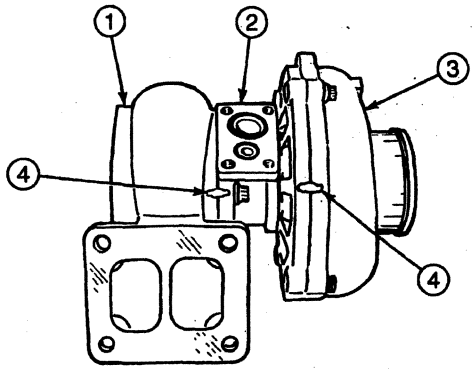

A22128-A

Item	Part Number	Description
1	—	Turbine Housing (Part of 6K682)
2	—	Center Housing (Part of 6K682)
3	—	Compressor Housing (Part of 6K682)
4	—	Alignment Marks

4. Remove four bolts securing turbine housing to center housing. Carefully lift turbine housing from center housing.

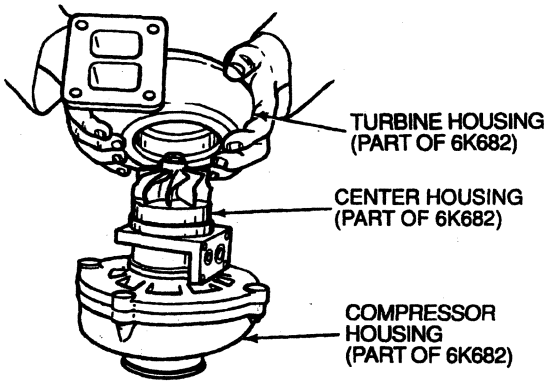

A22129-B

5. Remove four bolts securing compressor housing to center housing.

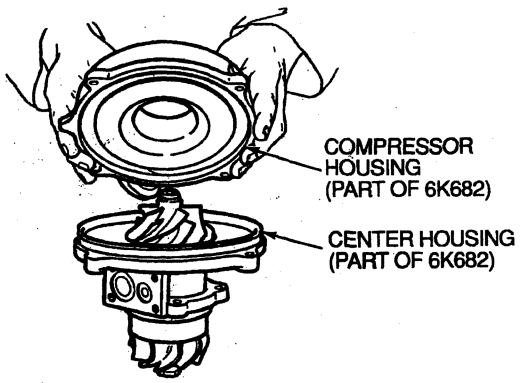

A22130-B

6. **CAUTION: Care must be taken during the handling of the impeller and turbine wheel. Be very careful and avoid bending any blades. Wheels with bent blades must never be used. Do not attempt to straighten bent wheel blades.**

   NOTE: Turbine wheel deposits can be caused by excessive oil consumption resulting in turbine wheel carbon deposits or engine overfueling. These will cause excessive operating temperatures that can cause aluminum components to melt. Such deposits may be found on the turbine wheel if such a failure occurs.

   Visually inspect compressor impeller and turbine wheel for blade erosion, bending, breakage or deposits.

7. If one or more inspections are out of specification or visually unacceptable, service or replace parts. Then reassemble turbocharger and attach to turbocharger pedestal assembly. If turbocharger passes all disassembly inspections, reassemble turbocharger and attach to turbocharger pedestal assembly. Reinstall on engine.

Assembly

1. Slide turbine housing over impeller and align marks on both center and turbine housing sections. Secure turbine housing to center housing with four bolts. Tighten to 20-24 N·m (15-18 lb-ft).

DISASSEMBLY AND ASSEMBLY (Continued)

2. Apply High Temperature RTV sealant to compressor side of center housing.

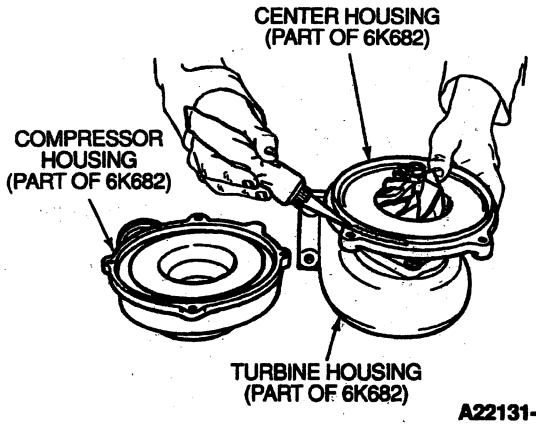

A22131-B

3. Carefully slide compressor housing over compressor wheel and align marks on both housings. Secure housing halves together with four mounting bolts. Tighten to 15-17 N·m (11-13 lb-ft).

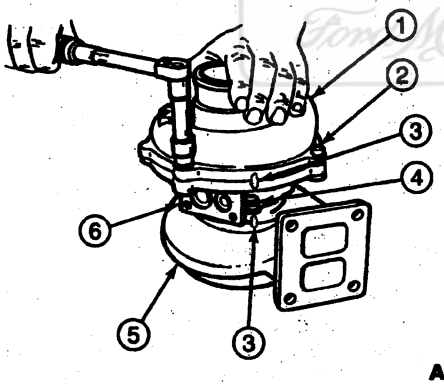

A22132-A

Item	Part Number	Description
1	—	Compressor Housing (Part of 6K682)
2	—	Compressor Housing Mounting Bolts (Part of 6K682)
3	—	Alignment Marks
4	—	Turbine Housing Mounting Bolts (Part of 6K682)
5	—	Turbine Housing (Part of 6K682)

(Continued)

Item	Part Number	Description
6	—	Center Housing (Part of 6K682)

4. Align bolt holes on exhaust back pressure control valve and turbine housing. Apply anti-seize compound to the mounting bolts. Tighten bolts to 7-9 N·m (62-80 lb-in).

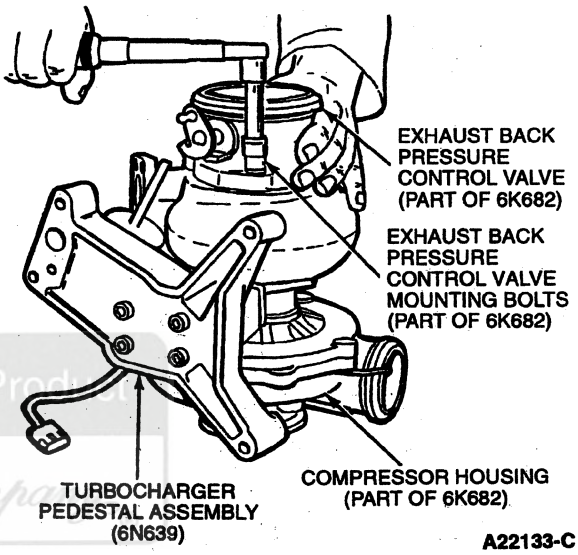

A22133-C

5. Install two new O-rings to turbocharger pedestal assembly and lubricate O-rings with engine oil.
6. Apply anti-seize compound to four pedestal mounting bolts and tighten to 24 N·m (18 lb-ft).

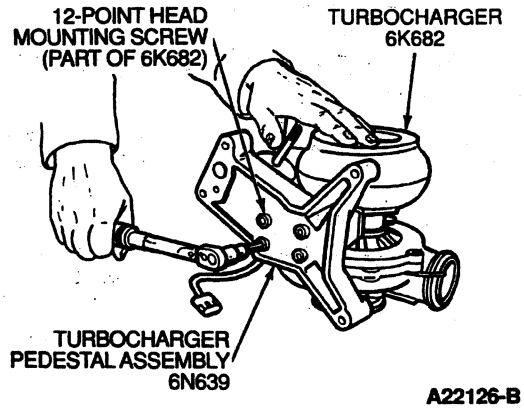

A22126-B

7. Connect exhaust back pressure control actuator rod to the exhaust back pressure control valve.

Official Licensed Product
Ford Motor Company

DISASSEMBLY AND ASSEMBLY (Continued)

8. Adjust actuator rod length to obtain 10 lb preload as measured using Spring Scale T74P-3504-Y.

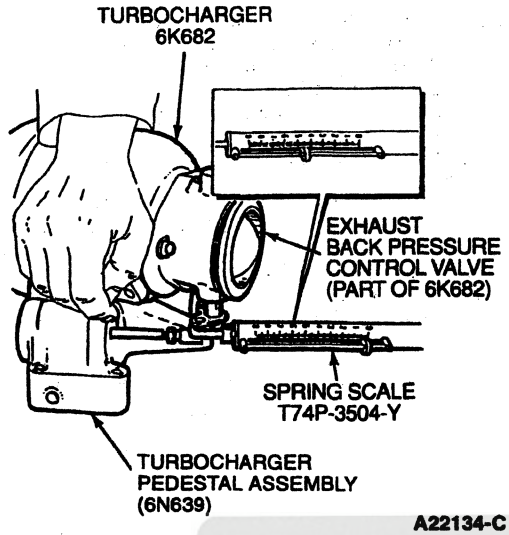

A22134-C

SPECIFICATIONS

TURBOCHARGER BEARING CLEARANCE

End Play			
mm		In.	
Min.	Max.	Min.	Max.
0.02	0.10	0.001	0.004
Exhaust Back Pressure Control Valve Preload			
N·m		Lb-Ft	
Min.	Max.	Min.	Max.
10.5	16.5	8	12

TORQUE SPECIFICATIONS

Description	N·m	Lb-Ft	Lb-In
Turbocharger Mounting Bolts (M8 Bolts)	24	18	—
Turbocharger Exhaust Inlet Adapter Bolts (M10)	49	36	—

(Continued)

TORQUE SPECIFICATIONS (Cont'd)

Description	N·m	Lb-Ft	Lb-In
Turbocharger to Turbocharger Pedestal Mounting Bolts	24	18	—
Turbocharger Exhaust Inlet Pipe Bolts and Nuts	49	36	—
Turbocharger Compressor Housing Bolts	15-17	11-13	—
Turbocharger Turbine Housing Bolts	20-24	15-18	—
Exhaust Back Pressure Control Valve (M6 Bolt)	7-9	—	62-80

SPECIAL SERVICE TOOLS/EQUIPMENT

SPECIAL SERVICE TOOLS REQUIRED

Tool Number/ Description	Illustration
T74P-3504-Y Spring Scale	T74P-3504-Y
T94T-9395-AH Fuel/Oil/Turbo Protector Cap Set	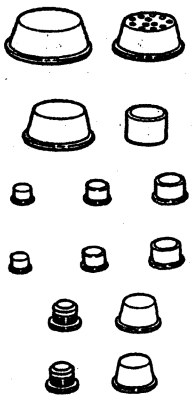 T94T-9395-AH

SPECIAL SERVICE TOOLS DESIRED

Tool Number	Description
D78P-4201-B	Dial Indicator/Magnetic Base

Official Licensed Product Ford Motor Company

SECTION 03-05 Drive Belts, Accessory

SUBJECT	PAGE
VEHICLE APPLICATION	03-05-1
DESCRIPTION AND OPERATION	
Drive Belts, Accessory	03-05-1
DIAGNOSIS AND TESTING	
Drive Belts, Accessory	03-05-2
Component Tests	03-05-4
Drive Belt Misalignment	03-05-6
Drive Belt Tension	03-05-4
Drive Belt Tensioner, Automatic	03-05-5
Inspection and Verification	03-05-2
Drive Belt Cracking/Chunking/Wear	03-05-2
Drive Belt Noise	03-05-3
Symptom Chart	03-05-3
REMOVAL AND INSTALLATION	
Belt Tensioner Pulley Replacement	03-05-8

SUBJECT	PAGE
REMOVAL AND INSTALLATION (Cont'd.)	
Drive Belt Replacement	03-05-7
Drive Belt, Serpentine (Poly-V)	03-05-7
Drive Belt Tensioner, Automatic	03-05-8
Fan and Clutch, 5.8L and 7.5L Engines	03-05-10
Fan and Clutch, 7.3L Diesel	03-05-11
Manually Tensioned Belts	03-05-9
ADJUSTMENTS	
Drive Belt Tension Adjustment, Manually Tensioned Belts, 7.5L Gasoline Engine	03-05-12
Drive Belt Tensioner, Automatic	03-05-13
Power Steering Pulley Alignment	03-05-13
SPECIFICATIONS	03-05-14
SPECIAL SERVICE TOOLS/EQUIPMENT	03-05-14

VEHICLE APPLICATION

F-250 Heavy Duty, F-350, F-Super Duty

Official Licensed Product
Ford Motor Company

DESCRIPTION AND OPERATION

Drive Belts, Accessory

Ford vehicles are equipped with poly-V drive belts (8620). To ensure maximum belt life, replacement drive belts should be of the same type and specification as originally installed.

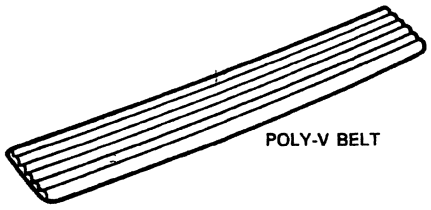

Q4052-A

The drive belts (except for 7.5L generator belt) are tensioned by an automatic belt tensioner which maintains proper belt tension at all times. The 7.5L generator belt is not automatically tensioned and requires periodic tensioning.

Loose drive belts will result in slippage that can cause a noise complaint or improper accessory operation (generator (GEN)(10300) will not charge, etc.). Overly tight drive belts will place severe loads on accessory bearings and result in premature drive belt or accessory failure. Refer to the illustrations in this section for the belt routing of each particular engine (6007).

Accessory Drive Belt, 5.8L MFI Engine

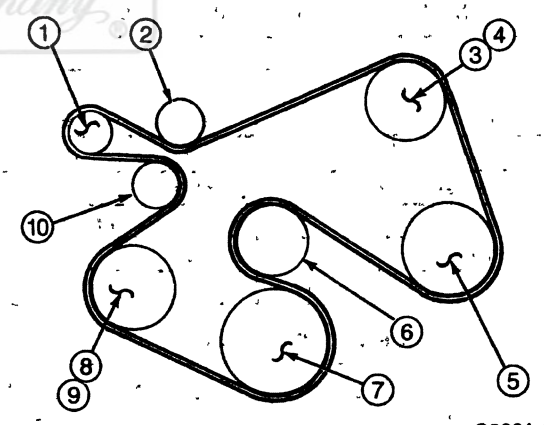

Q2601-G

Item	Part Number	Description
1	10300	Generator
2	8678	Belt Idler Pulley
3	2E884	A/C Clutch Pulley, with A/C
4	8678	Belt Idler Pulley, Without A/C
5	3A733	Power Steering Pump Pulley
6	8509	Water Pump Pulley
7	6312	Crankshaft Pulley

(Continued)

DESCRIPTION AND OPERATION (Continued)

Item	Part Number	Description
8	9B447	Secondary Air Injection Pump Pulley— 5.8L over 8500 GVRW
9	19A216	Idler Pulley — 5.8L California
10	6B209	Drive Belt Tensioner

Accessory Drive Belt, 7.3L Diesel Engine

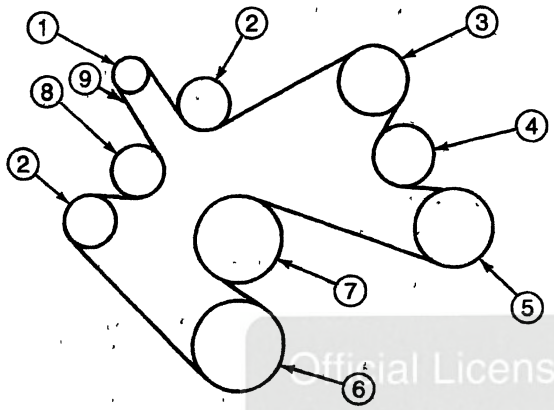

Q4235-B

Item	Part Number	Description
1	10300	Generator
2	8678	Belt Idler Pulley
3	19703	A/C Compressor
4	2A451	Vacuum Pump
5	3A733	Power Steering Pump Pulley
6	6312	Crankshaft Pulley
7	8509	Water Pump Pulley
8	6B209	Drive Belt Tensioner
9	8620	Drive Belt

Accessory Drive Belt, 7.5L MFI Engine

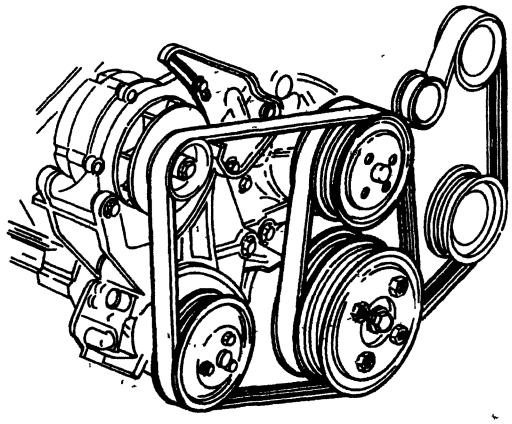

7.5L ENGINE

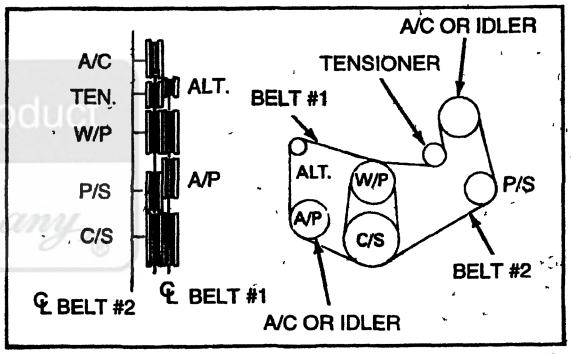

Q2738-G

DIAGNOSIS AND TESTING

Drive Belts, Accessory

Inspection and Verification

Drive Belt Cracking/Chunking/Wear

Under severe operating conditions (high temperatures, low humidity), drive belt rib cracking can occur at less than 96,000 km (60,000 miles). Drive belt rib cracking perpendicular to the belt ribs is not a reason for concern and has no detrimental effect on belt performance. Cracks parallel to ribs are not acceptable.

Official Licensed Product
Ford Motor Company

DIAGNOSIS AND TESTING (Continued)

Drive belt chunking means that the rubber material actually chunks out between the cracks. The drive belt (8620) should be replaced if chunking occurs.

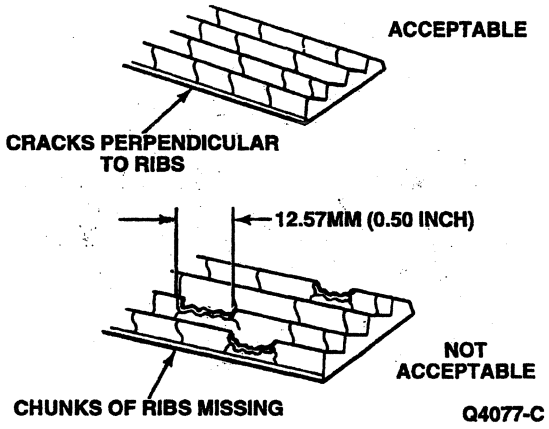

Drive Belt Noise

Drive belt chirp is a regularly occurring chirping noise that occurs due to pulley misalignment or excessive pulley runout. It can be a result of a damaged pulley or an improperly replaced pulley that was not properly aligned.

To correct, determine the area where the noise comes from. Then check each of the pulleys in that area with a straightedge to the crankshaft pulley (6312) and look for the accessory pulleys to be out of position in the fore / aft direction or at an angle to the straightedge.

Belt squeal is an intermittent noise that occurs when the drive belt slips on a pulley during certain conditions such as: engine start-up, rapid engine acceleration, or A / C clutch engagement.

Drive belt squeal can occur under the following conditions:

1. If the A / C discharge pressure goes above 2895 kPa (420 psi). This can occur if:
   a. the A / C system is overcharged.
   b. the A / C condenser core airflow is blocked.
   c. the fan blade (8600) is not engaging fully at idle.
2. If A / C OFF equalized pressure (the common discharge and suction pressure that occurs after several minutes) exceeds 965 kPa (140 psi), which is a rare occurrence at high ambient temperatures with a hot engine. Turn A / C off for a few seconds and then back on after fan blade begins to cool A / C condenser core.
3. If any of the accessories are damaged, or have a worn or damaged bearing or internal torsional resistance above normal for any reason. All of the accessories should be rotatable by hand in the unloaded condition. If any are not, inspect the accessories.
4. If fluid gets on the drive belt. Fluids include power steering fluid, engine coolant, engine oil or air conditioning system lubricant.

   If fluid does get on the drive belt during service, the best policy is to clean the drive belt with soap and water and thoroughly rinse with clean water. The drive belt does not have to be replaced if no apparent damage has occurred.
5. If drive belt is too long. A drive belt that is too long will allow the drive belt tensioner arm to go all the way to drive belt tensioner arm travel stop under certain load conditions, which will untension the drive belt. If the drive belt tensioner (6B209) is resting on the stop, replace the drive belt.
6. If the drive belt tensioner is worn or damaged. The drive belt tensioner arm should rotate freely without binding.

Symptom Chart

ACCESSORY DRIVE BELT DIAGNOSIS

Condition	Possible Source	Action
• Excessive Noise / Belt Squeal	• Seized accessory. • Loose drive belt.	• CHECK all accessories for free rotation and REPLACE accessory if necessary. REPLACE drive belt. • CHECK condition and tension of drive belt. REPLACE drive belt or ADJUST tension of manually tensioned drive belt as necessary. • CHECK that automatic drive belt tensioner is within the indicator marks. CHECK for correct drive belt length if drive belt tensioner is out of operating range.
• Rattle	• Loose pulley or accessory.	• CHECK for looseness and TIGHTEN. • CHECK for proper belt routing.

DIAGNOSIS AND TESTING (Continued)

ACCESSORY DRIVE BELT DIAGNOSIS (Continued)

Condition	Possible Source	Action
• Noisy Tensioner Pulley Bearing	• Worn bearing.	• REPLACE pulley per automatic belt tensioner pulley replacement procedure.
• Belt Chirp	• Misaligned power steering pump pulley.	• ALIGN power steering pump pulley according to power steering pump pulley alignment procedure.
• Severe Belt Flutter	• Loose drive belt. • Binding tensioner arm.	• CHECK belt tension and ADJUST (manually tensioned belts only) if necessary. CHECK condition of drive belt and REPLACE if necessary. • CHECK for proper belt routing. • REMOVE drive belt from drive belt tensioner and VERIFY that tensioner arm is not frozen in position or that arm does not bind when manually moved throughout its operating range.
• Frayed Drive Belt	• Drive belt not seated correctly. • Severely misaligned pulley. • Tensioner pulley. • Drive belt too tight. • Drive belt worn out.	• REPLACE drive belt and VERIFY correct belt seating. • USE a straightedge to CHECK for severe angular misalignment between adjacent pulleys. CORRECT as necessary. • REPLACE tensioner. • REPLACE drive belt. • REPLACE drive belt.
• Severely Glazed Drive Belt	• Seized accessory. • Loose drive belt.	• CHECK all accessories for free rotation and REPLACE if necessary. REPLACE drive belt. • REPLACE drive belt. • CHECK for proper belt routing.
• Improper Accessory Operation (Power Steering or Air Conditioning Does Not Work, Engine Overheats or Battery Does Not Charge)	• Loose drive belt.	• CHECK drive belt for looseness or glazing and REPLACE or ADJUST tension of manually tensioned belts if necessary. • CHECK for proper belt routing.
• Drive Belt Jumps off Pulley	• Greatly misaligned pulleys. • Drive belt not seated correctly. • Pulley wobble. • Excessive crankshaft end play.	• CHECK for misalignment between adjacent pulleys. • REPLACE drive belt and VERIFY correct seating. • VERIFY that no pulley wobbles during engine operation. Conditions causing wobble are: bent pulley, bent accessory shaft, rear face of pulley not seated flat against mating surface. • REBUILD engine.
• Excessive Wear on Drive Belt Tensioner	• Extended off-road operation. • Wrong belt installed (too short).	• REPLACE drive belt tensioner according to automatic belt tensioner pulley replacement procedure. • REPLACE automatic belt tensioner and drive belt.

Official Ford Product
Ford Motor Company

Component Tests

Drive Belt Tension

Check drive belt tension. Refer to Drive Belt Tension Adjustment in the Adjustments portion of this section. If tension is not within specification, check drive belt tensioner. Service components as required.

DIAGNOSIS AND TESTING (Continued)

Drive Belt Tensioner, Automatic

The drive belt tensioner will maintain correct belt tension if the correct length drive belt is on the engine. To verify that the drive belt tensioner is working properly on the 7.3L and 7.5L engines, check to see that the belt length indicator mark on the drive belt tensioner is between the maximum and minimum marks. The 5.8L drive belt tensioner does not have belt length indicator marks.

Belt Length Indicator, 7.5L MFI

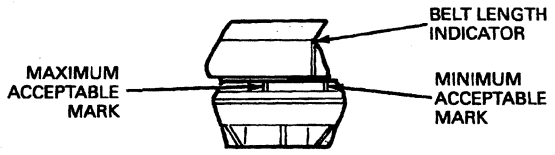

INDICATOR SHOULD BE BETWEEN MARKS

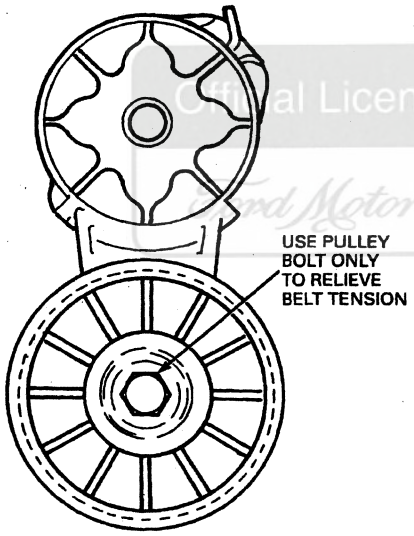

DRIVE BELT TENSIONER-6B209 7.5 MFI Q2741-C

Belt Length Indicator, F-Super Duty Motorhome Chassis, 7.5L MFI

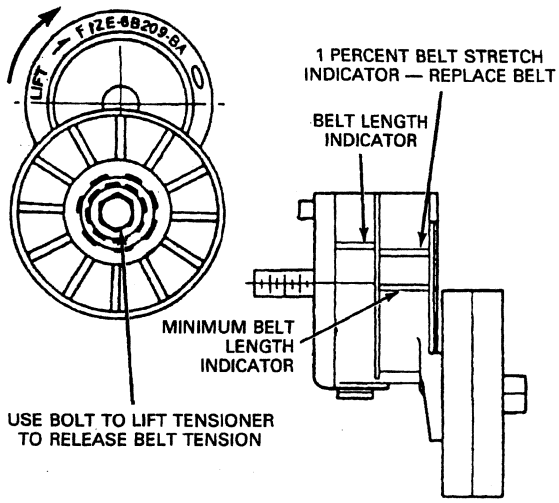

Q3672-A

Belt Length Indicator, 7.3L Diesel Engine

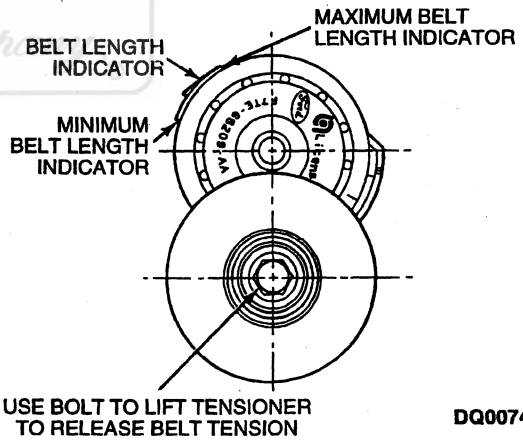

DQ0074-A

Official Licensed Product Ford Motor Company

DIAGNOSIS AND TESTING (Continued)

Belt Tension Check

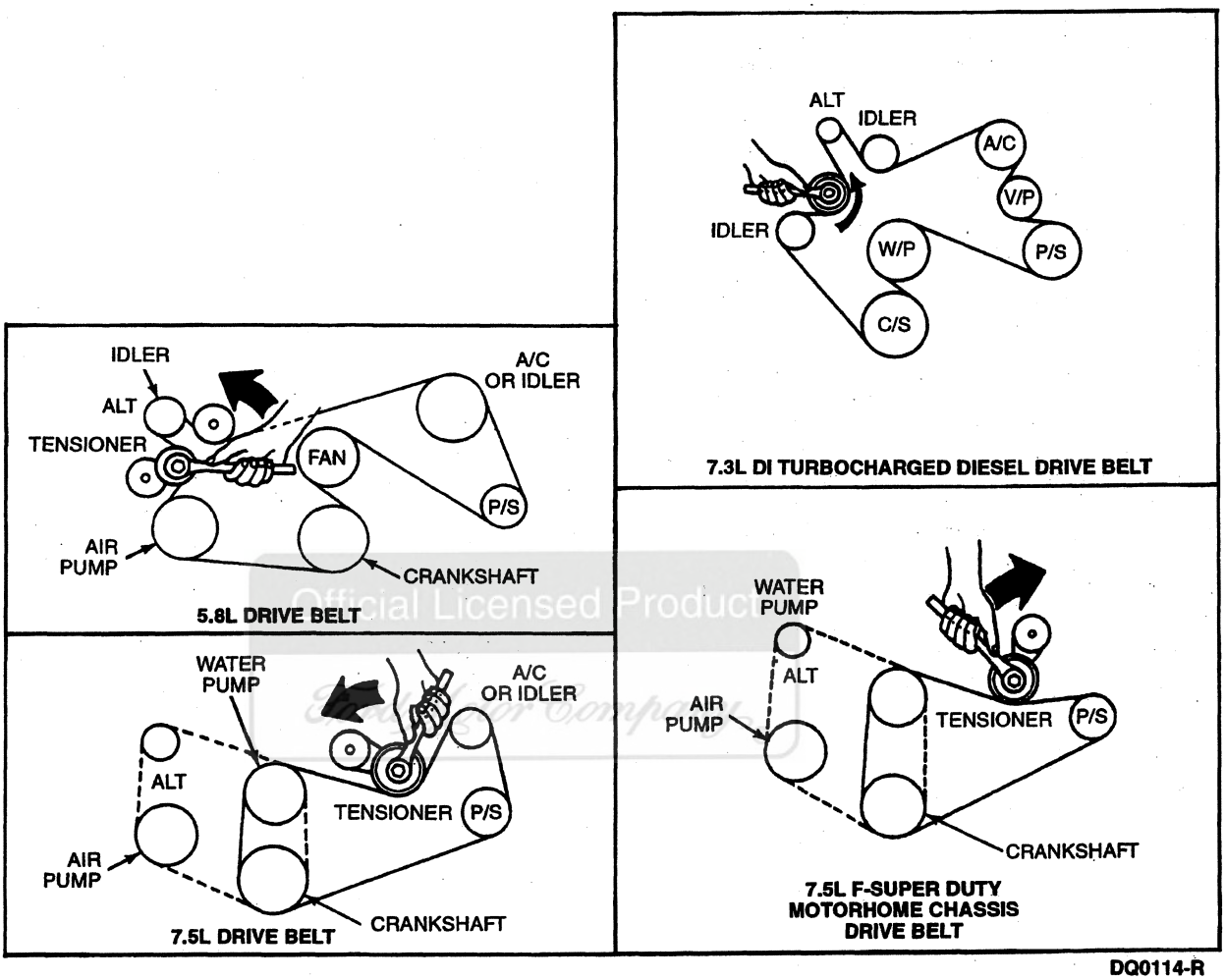

Official Licensed Product

Drive Belt Misalignment

CAUTION: Incorrect drive belt installation will cause excessive drive belt wear and can cause the drive belt to come off the drive pulleys.

NOTE: Original equipment drive belts are made of a special cord construction and are subjected to special testing before they are approved for use.

Replacement drive belts other than O.E.M. can track improperly. If a replacement drive belt tracks improperly, replace with an O.E.M. drive belt to avoid performance failure or loss of drive belt during cold operation.

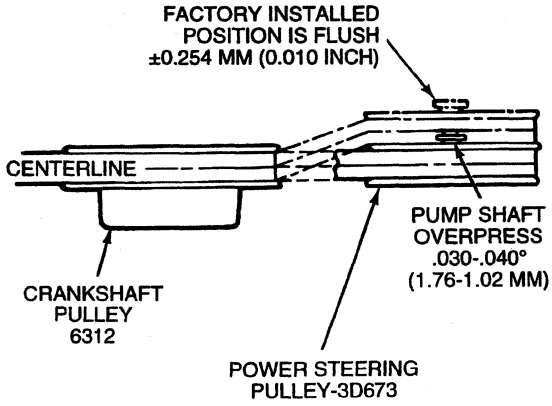

DIAGNOSIS AND TESTING (Continued)

With the engine running, check drive belt tracking (the position of the drive belt on the drive belt tensioner). If the edge of the drive belt rides beyond the edge of the drive belt tensioner, this can cause noise and premature wear. If a drive belt tracking condition exists, visually check the drive belt tensioner for damage, especially the mounting pad surface. If the drive belt tensioner is not installed correctly with the locating pins in the locating holes, the mounting surface pad will be out of position. This will result in drive belt tension and chirp and squeal noises.

If the above procedures do not correct the drive belt noise, try replacing the drive belt with a known good original equipment drive belt. However, the drive belt noise may return again (with mileage) if one of the above conditions still exists uncorrected.

- With engine running, visually observe the grooves in the pulleys (not the pulley flanges) for excessive wobble. Replace components as required.
- Check all accessories, mounting brackets and drive belt tensioner for any interference that prevents the component from mounting properly. Correct any interference condition and recheck belt tracking.
- Tighten all accessory mounting brackets and drive belt tensioner retaining hardware to specification. Recheck drive belt tracking.

REMOVAL AND INSTALLATION

Drive Belt Replacement

Conditions requiring drive belt (8620) replacement are rib chunk-out, excessive wear, severe glazing, frayed cords. Replace any drive belt exhibiting any of these conditions. Minor cracks in the ribbed side of V-grooved portion of the drive belt are considered acceptable.

Drive Belt, Serpentine (Poly-V)

1. NOTE: The illustration of the serpentine drive belt in this procedure is typical. Refer to the proper serpentine drive belt routing diagram in this section, or as indicated on the underhood label, for the specific engine (6007) being serviced.

   Route drive belt on the pulleys properly as indicated on the correct diagram. The belt span that extends past the flat belt idler pulley (8678) should be loose.

7.3L Diesel Engine Belt Routing

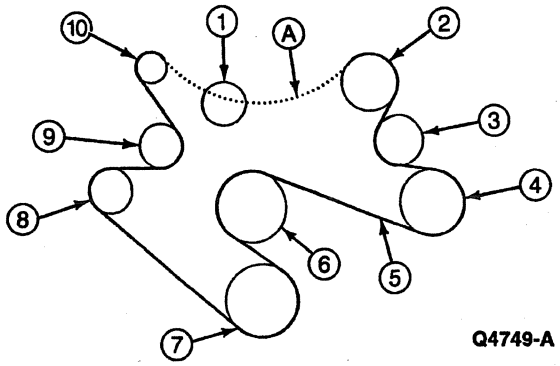

Q4749-A

Item	Part Number	Description
1	19A216	Flat Idler Pulley
2	—	A/C Compressor Pulley (Part of 19D629)
3	2L487	Brake Vacuum Pump Pulley
4	3A733	Power Steering Pump Pulley
5	8620	Drive Belt
6	8501	Water Pump Pulley
7	6312	Crankshaft Pulley
8	8678	Belt Idler Pulley (Grooved)
9	6B209	Drive Belt Tensioner
10	10300	Generator Pulley
A	—	This Belt Span Should Be Loose

2. Check to see that the drive belt is positioned correctly on all pulleys. Make sure all drive belt ribs are correctly seated in the pulley grooves.

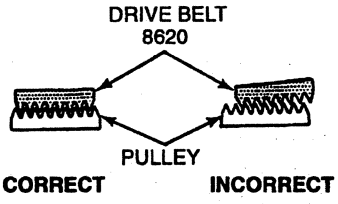

Q4750-A

3. Install a closed-end wrench on the drive belt tensioner pulley, rotate in the proper direction to lift the tensioner arm away from the drive belt and install the drive belt properly under the flat idler pulley. Do not allow the drive belt tensioner (6B209) to snap back because this can damage the drive belt.
4. **CAUTION: Make sure the drive belt is properly seated on all pulleys. One revolution on the engine with an incorrectly seated drive belt can snap the tensile members in the drive belt.**

   Visually inspect drive belt alignment.

Official Licensed Product
Ford Motor Company

REMOVAL AND INSTALLATION (Continued)

5. Slowly release the drive belt tensioner toward the drive belt to tighten the drive belt and complete installation.

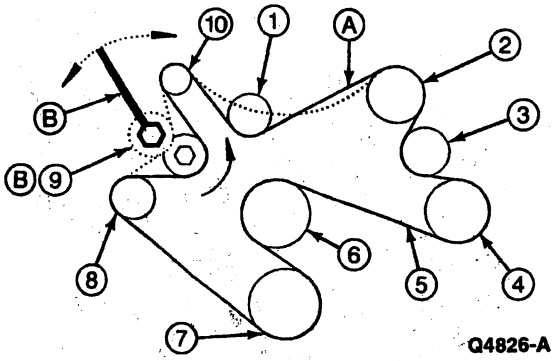

Q4826-A

Item	Part Number	Description
1	19A216	Flat Idler Pulley
2	—	A/C Compressor Pulley (Part of 19D629)
3	2L487	Brake Vacuum Pump Pulley
4	3A733	Power Steering Pump Pulley
5	8620	Drive Belt
6	8501	Water Pump Pulley
7	6312	Crankshaft Pulley
8	8678	Belt Idler Pulley (Grooved)
9	6B209	Drive Belt Tensioner
10	10300	Generator Pulley
A	—	Install Drive Belt Under Flat Idler Pulley
B	—	Rotate to Loosen, Tighten to Install Drive Belt

Drive Belt Tensioner, Automatic

Removal

1. Install a closed-end wrench on the tensioner pulley bolt and lift the tensioner arm away from the drive belt (8620).
2. Remove old drive belt. Release drive belt tensioner (6B209) slowly. Do not allow drive belt tensioner to snap back after the drive belt is removed because this can damage the drive belt tensioner.
3. Remove drive belt tensioner by loosening the tensioner pivot bolt.

Installation

1. Install drive belt tensioner. Tighten pivot bolt to specifications.
2. **CAUTION: Make sure the drive belt is properly seated on all pulleys. One revolution of the engine (6007) with an incorrectly seated drive belt can snap tensile members in the drive belt.**

   Install new drive belt over pulleys, making sure that all belt ribs are correctly seated in the pulley grooves.

Poly-V Belt Alignment

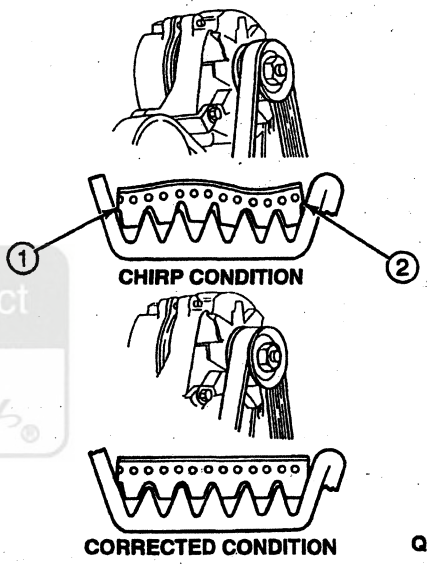

Q4073-C

Item	Part Number	Description
1	—	Low Contact, No Wear/Shine (Part of 8620)
2	—	High Pressure, High Wear/Shine (Part of 8620)

Belt Tensioner Pulley Replacement

Conditions requiring pulley replacement are excessive pulley wear or pulley bearing noise, usually resulting from extended operation in abrasive off-road conditions.

Using a 16 mm closed-end wrench, remove the drive belt (8620). Refer to Drive Belt Tensioner, Automatic in the Removal and Installation portion of this section.

REMOVAL AND INSTALLATION (Continued)

Removal

NOTE: 7.5L (not F-Super Duty Motorhome Chassis) bolts have a left-hand thread, requiring clockwise motion to loosen the bolts. 7.5L F-Super Duty Motorhome Chassis idler pulley bolts, which loosen counterclockwise, have a conventional right-hand thread,

1. NOTE: Excessive rearward force on the bolt during removal can overstress and crack the tensioner arm.

   NOTE: Pulleys being replaced for suspected bearing wear should be evaluated for rough bearings. Bearing noise that continues or rapidly returns after a replacement pulley is installed is usually belt chirp rather than worn bearings. Bearings should rotate smoothly with a slight resistance due to the permanent lubrication.

   Using the 16 mm wrench, loosen the belt idler pulley retention bolt or nut.
2. Remove bolt or nut and dust shield and remove the drive belt tensioner (6B209) from the tensioner arm locating boss.

Installation

1. Follow the removal procedure in reverse order, observing the correct rotation of the retention bolt.
2. Tighten bolt or nut to specifications.

Manually Tensioned Belts

Removal

1. Loosen generator adjustment bolts and pivot bolt as shown in the following illustration.
2. Remove old drive belt (8620).

Installation

1. Install new drive belt and tension. Refer to Drive Belt Tension Adjustment in the Adjustments portion of this section.

Accessory Drive Belt Tension Check, 7.5L MFI Engine

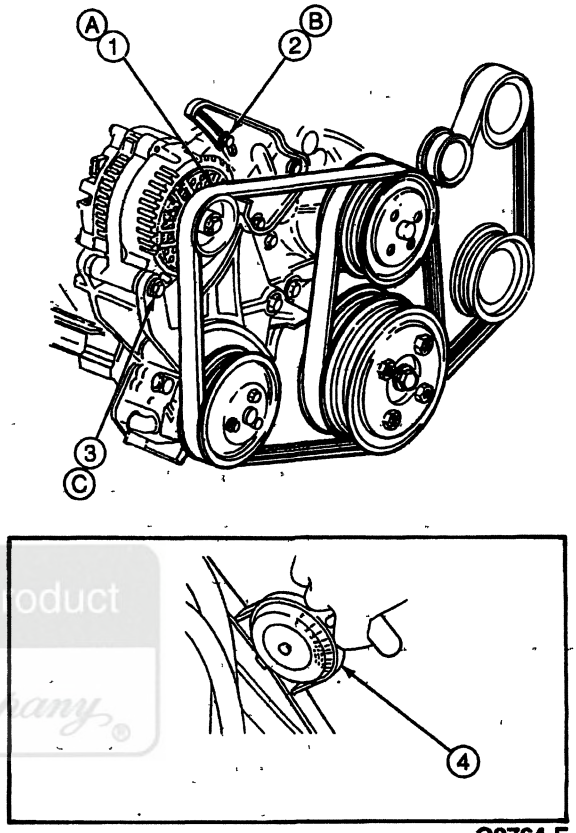

Q2764-E

Item	Part Number	Description
1	8620	Belt Drive
2	N811023-5309	Bolt
3	391319-S2	Bolt
4	014-R1056	Belt Tension Gauge
A	—	Tension Range 244-271 N (180-200 Lb)
B	—	Tighten to 20-30 N·m (15-22 Lb-Ft)
C	—	Tighten to 54-71 N·m (40-52 Lb-Ft)

Licensed Product Ford Motor Company

REMOVAL AND INSTALLATION (Continued)

Automatic Tensioner

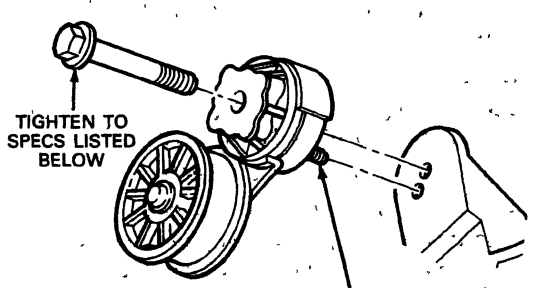

Belt Tensioner, 7.5L F-Super Duty Motorhome Chassis

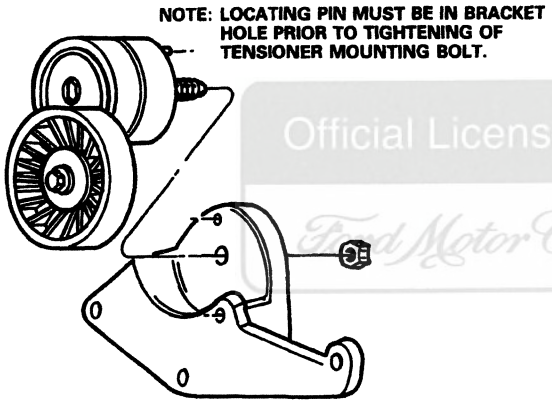

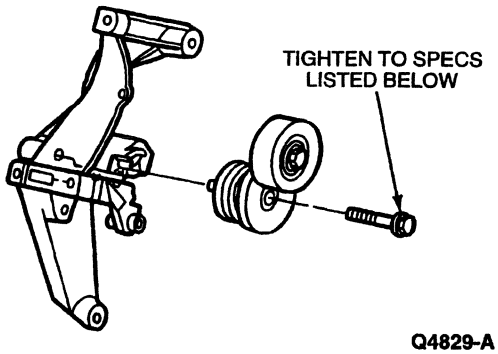

Engine	N·m	Lb-Ft
7 5L	68-92	50-68
5 8L, 7 3L	47-63	35-46

Fan and Clutch, 5.8L and 7.5L Engines

Removal

1. Remove fan shroud (8146) and radiator (8005) if necessary.
2. Remove four screws retaining clutch on water pump hub.
3. Pull fan clutch (8A616) and fan blade (8600) off water pump pilot and remove assembly from vehicle.
4. Remove four screws and separate fan clutch from fan blade.

Installation

1. Position fan blade to fan clutch and attach with four screws. Tighten screws to 16-24 N·m (12-18 lb-ft).
2. Position fan blade and fan clutch to water pump pulley (8509) and attach with four screws. Tighten screws to 16-24 N·m (12-18 lb-ft).
3. Install the fan shroud.

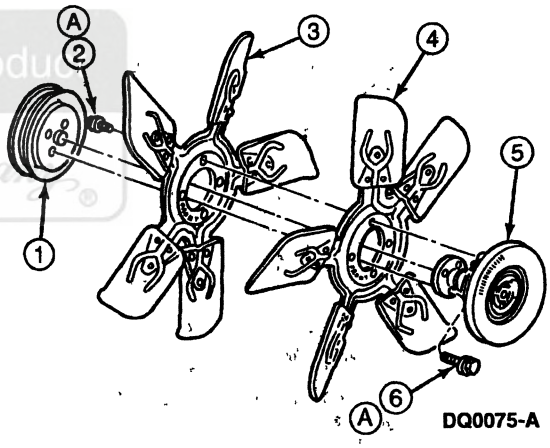

Item	Part Number	Description
1	8509	Water Pump Pulley
2	57632-S	Screw and Washer Assy, 5/16-18 x .62 Hex
3	8600	Fan Blade (5.8L)
4	8600	Fan Blade (7.5L)
5	8A616	Fan Clutch
6	380288-S2	Screw and Washer Assy, 5/16-24 x .88 Hex
A	—	Tighten to 16-24 N·m (12-18 Lb-Ft)

Official Licensed Product
Ford Motor Company

REMOVAL AND INSTALLATION (Continued)

Fan and Clutch, 7.3L Diesel

SPECIAL SERVICE TOOL(S) REQUIRED

Description	Tool Number
Fan Clutch Nut Wrench	T83T-6312-B
Fan Clutch Pulley Holder	T94T-6312-AH

Removal

1. Partially drain the engine cooling system.
2. Remove the upper radiator hose (8260).
3. Disconnect the coolant reservoir hose at radiator (8005).
4. **CAUTION: The clutch assembly nut has a right-hand thread and must be rotated counterclockwise to remove it.**

   Remove the fan clutch (8A616), using Fan Clutch Nut Wrench T83T-6312-B and Fan Clutch Pulley Holder T94T-6312-AH. Set fan clutch in fan shroud (8146).

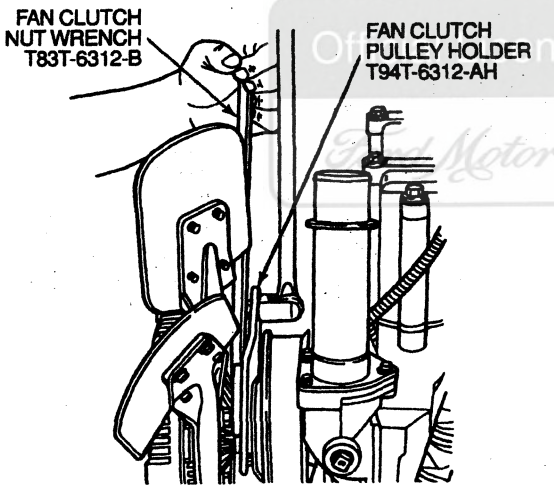

A23072-B

5. Remove the fan shroud screws.
6. Remove the fan shroud and fan clutch.
7. Remove the bolts attaching the fan blade (8600) to the fan clutch.

Installation

1. Install the bolts attaching the fan blade to the fan clutch. Tighten to 16-24 N·m (12-18 lb-ft).
2. Install the fan shroud and fan clutch.
3. Install the radiator fan shroud screws.
4. **CAUTION: The clutch assembly nut has a right-hand thread and must be rotated clockwise to tighten it.**

   Install the fan clutch, using Fan Clutch Nut Wrench T83T-6312-B and Fan Clutch Pulley Holder T94T-6312-AH. Tighten to 113-153 N·m (84-113 lb-ft).

Off-Licensed Product
Ford Motor Company

REMOVAL AND INSTALLATION (Continued)

Fan Blade and Clutch Assembly, 7.3L Diesel

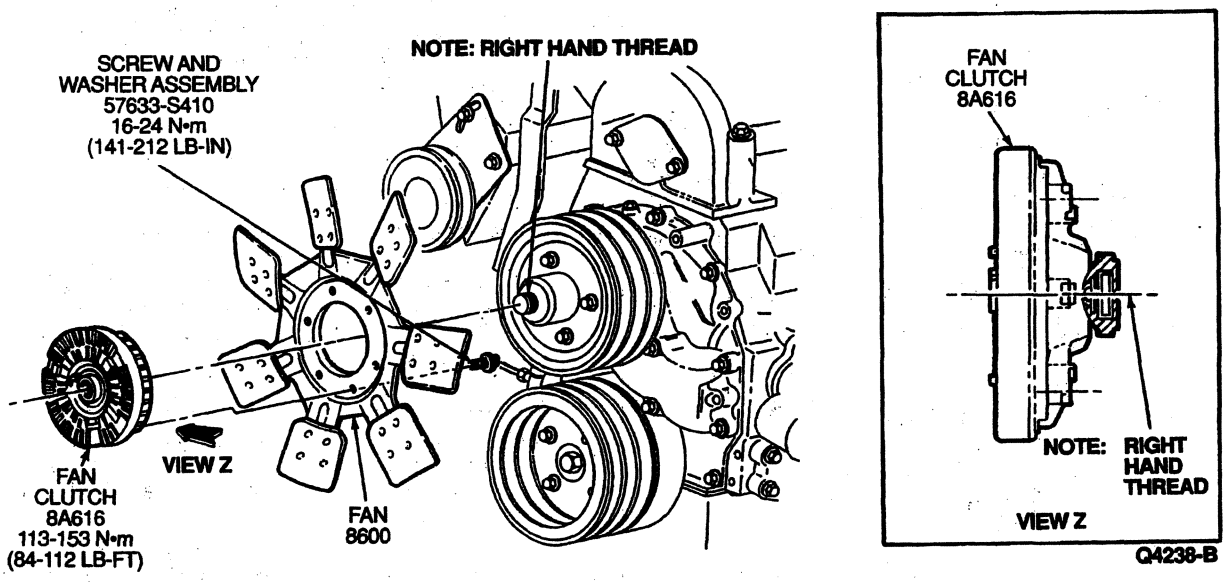

5. Install the coolant reservoir hose to radiator.
6. Install the upper radiator hose.
7. Refill and bleed the engine cooling system. Refer to Section 03-03.

ADJUSTMENTS

Drive Belt Tension Adjustment, Manually Tensioned Belts, 7.5L Gasoline Engine

1. Use Rotunda Belt Tension Gauge 014-R1056 or equivalent for checking tension.
2. Loosen generator adjustment bolts.
3. Tighten pivot bolt enough to remove all free play from pivot area but not enough to prevent the generator (GEN)(10300) from rotating to allow belt tensioning.
4. Place an adjustable wrench on the top lug of the generator and rotate generator until the drive belt (8620) is tightened to the proper tension.

   Make sure to use the new belt tension for new drive belts and the used belt tension for used drive belts. A used drive belt is one with more than 5 minutes of engine (6007) operation. Refer to Drive Belt Specifications chart in the Specifications portion of this section.
5. Tighten adjustment bolt to specification while maintaining belt tension. Refer to illustration for torque specification.
6. Tighten pivot bolt to specification. Refer to illustration for torque specification.
7. Check and readjust belt tension if necessary.
8. Start engine and idle for 5 minutes.
9. Recheck belt tension.
10. If tension is less than the minimum tension after 5 minutes of operation as indicated in the chart, then reset belt tension to within used belt tension limits. Start engine and idle for 5 minutes. Recheck belt tension.

Official Licensed Product Ford Motor Company

ADJUSTMENTS (Continued)

11. If belt will not hold tension, then replace drive belt.

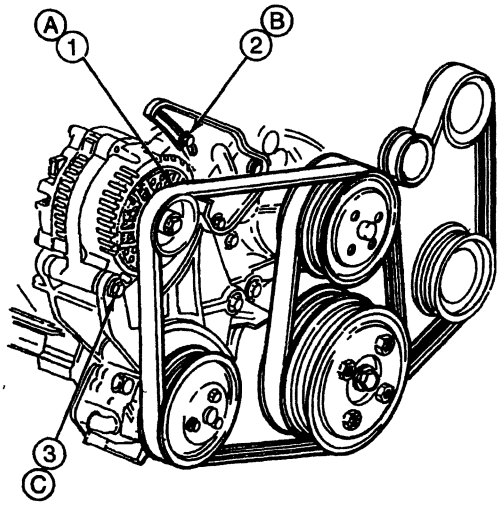

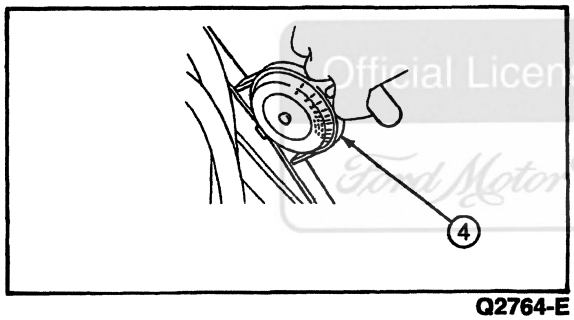

Q2764-E

Item	Part Number	Description
1	8620	Drive Belt
2	N811023-S309	Screw
3	391319-S2	Bolt
4	014-R1056	Belt Tension Gauge
A	—	Belt Tension Range 800N (180 Lb)
B	—	Tighten to 40-55 N·m (30-41 Lb-Ft)
C	—	Tighten to 54-71 N·m (40-52 Lb-Ft)

Drive Belt Tensioner, Automatic

1. **CAUTION: The drive belt tensioner (6B209) has no provision for adjustment and will be damaged if forced to travel beyond its operating range.**

   Remove the drive belt (8620).
2. Rotate the drive belt tensioner from the full relaxed position through the full stroke to assure that there is no sticking, binding or grabbing. If any of these conditions exist, replace the drive belt tensioner.
3. Reinstall the drive belt.

Power Steering Pulley Alignment

SPECIAL SERVICE TOOL(S) REQUIRED

Description	Tool Number
Steering Pump Pulley Remover	T69L-10300-B
Steering Pump Pulley Replacer	T65P-3A733-C

A chirping noise from the accessory drive belt that is more noticeable at idle than at higher speeds may be caused by a power steering pump pulley (3A733) that is out of alignment.

The misaligned power steering pulley causes the accessory drive belt to chirp after it leaves the power steering pump pulley, travels over the water pump pulley (8509) and enters into the crankshaft pulley (6312) on an angle on 5.8L engines. Verify that the chirping noise is coming from the entrance to one of these two pulleys by listening through a length of rubber hose or another stethoscope-like device.

If the chirp has been isolated to one of these pulleys, then correct this condition by aligning the power steering pump pulley using the following service procedure.

NOTE: Accessory drive belt chirp not corrected by this procedure may be caused by a damaged pulley or bent accessory shafts. Steady pulsation of the drive belt tensioner (6B209) indicates this condition. Observe each pulley in the system for runout.

1. **CAUTION: Do not sand the edges of the drive belt or apply lubricants or dressings. These are only temporary fixes and can damage belt.**

   Clean the accessory drive belt (8620) with mild soap and water to wash away oil or other contaminants.
2. On some models, it may be necessary to remove the fan shroud (8146) to allow for proper installation and operation of the power steering pulley puller and installer tools.
3. Using Steering Pump Pulley Remover T69L-10300-B and Steering Pump Pulley Replacer T65P-3A733-C, set the power steering pump pulley hub to within ±.010 inch of being flush with the end of the power steering pump shaft.

Official Licensed Ford Motor Company

ADJUSTMENTS (Continued)

4. **CAUTION: Damaged accessory drive belts should be replaced before proceeding to Step 4. Use only a closed-end wrench to lift the drive belt tensioner to avoid possible damage. A wedged screwdriver will crack the pulley or the housing.**

   Operate the engine (6007) at idle for 5 minutes to see if chirping noise has been corrected. If not, proceed to Step 5.

5. Select a direction and move the power steering pump pulley at .50-mm (.020-inch) increments in that direction. After each move (increment), remove the tool and operate the engine for 5 minutes. If chirp fades, alignment is being achieved; if chirp increases, reverse the alignment direction. Continue moving the pulley until the noise is eliminated.
6. Reinstall the fan shroud.

SPECIFICATIONS

DRIVE BELT SPECIFICATIONS

Engine	Tensioning Method	Belt Type	New Belt Tension (0 Min. Operation)	Used Belt Tension (Greater Than 5 Min. Operation)	Min. Tension After 5 Min. Operation
5.8L	Automatic	6K Poly-V Belt	Tension OK if Tensioner Within Indicator Marks. 227 N (51 Lb) Min.	Same as New	Same as New
7.5L	(A/C & P/S Belt) Automatic	6K Poly-V Belt	Tension OK if Tensioner Within Indicator Marks.	Same as New	Same as New
7.5L	(Alt. & Air Pump Belt) Manual	6K Poly-V Belt	800-889 N (180-200 Lb)	489-578 N (110-130 Lb)	467 N (105 Lb)
7.3L	Automatic	8K Poly-V Belt	422.5 N (95 Lb) Min.	Same as New	Same as New

Official Licensed Product
Ford Motor Company

TORQUE SPECIFICATIONS

Description	N·m	Lb-Ft
Pivot Bolt, Alternator, 7.5L	54-71	40-52
Adjuster Bolt, Alternator, 7.5L	20-30	15-22
Bolt, Automatic Tensioner-to-Bracket, 7.5L	68-92	50-68
Bolt, Automatic Tensioner-to-Bracket, 5.8L, 7.3L Diesel	47-63	35-46
Screw, Fan-to-Clutch, 5.8L, 7.5L	16-24	12-18
Screw, Clutch-to-Water Pump, 5.8L, 7.5L	16-24	12-18
Screw, Clutch-to-Water Pump, 7.3L	113-153	84-113

SPECIAL SERVICE TOOLS/EQUIPMENT

SPECIAL SERVICE TOOLS REQUIRED

Tool Number/ Description	Illustration
T65P-3A733-C Steering Pump Pulley Replacer	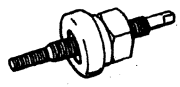 T65P-3A733-C
T69L-10300-B Steering Pump Pulley Remover	T69L-10300-B
T83T-6312-B Fan Clutch Nut Wrench	T83T-6312-B
T94T-6312-AH Fan Clutch Pulley Holder	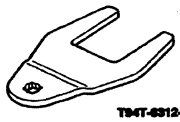 T94T-6312-AH

ROTUNDA EQUIPMENT

Model	Description
014-R1056	Belt Tension Gauge

SECTION 03-06 Starting System

SUBJECT	PAGE
VEHICLE APPLICATION	03-06-1
DESCRIPTION AND OPERATION	
Sequence of Operation	03-06-6
Starter System	03-06-1
Overrunning Clutch	03-06-5
Starter Motor	03-06-3
Starter Relay	03-06-6
Starter Solenoid	03-06-5
DIAGNOSIS AND TESTING	
Component Tests	03-06-12
Starter	03-06-12
Drive Pinion Test	03-06-12
Individual Cable	03-06-16
Load Test	03-06-12
Motor Feed Circuit	03-06-14
Motor Ground Circuit	03-06-15
No-Load Test	03-06-13
Voltage Drop Tests	03-06-14
Starter Solenoid	03-06-16
Electrical Schematic(s)	03-06-8
Inspection and Verification	03-06-8
Pinpoint Tests	03-06-9
Symptom Chart	03-06-8
REMOVAL AND INSTALLATION	
Starter Motor	03-06-17
Starter Relay	03-06-17
DISASSEMBLY AND ASSEMBLY	
Starter Motor	03-06-17
SERVICE PROCEDURES	
Jump-Starting	03-06-17
Road Service	03-06-17
CLEANING AND INSPECTION	
Cleaning	03-06-18
Inspection	03-06-18
Armature	03-06-18
Bearings (Diesel Engine Only)	03-06-19
Brush and Brush Holder	03-06-19
Brush Spring Tension Inspection	03-06-19
Bushings	03-06-19
Field Coil Inspection	03-06-19
Starter Drive and/or Flywheel Ring Gear Inspection	03-06-19
Starter Frame and Magnet	03-06-19
SPECIAL SERVICE TOOLS/EQUIPMENT	03-06-20

Official Licensed Product
Ford Motor Company

VEHICLE APPLICATION

F-Series

DESCRIPTION AND OPERATION

Starter System

The function of the starting system is to crank the engine (6007) at a speed fast enough to permit the engine to start.

WARNING: WHEN SERVICING THE STARTER MOTOR OR PERFORMING OTHER UNDERHOOD WORK IN THE VICINITY OF THE STARTER MOTOR, BE AWARE THAT THE HEAVY-GAUGE BATTERY INPUT LEAD AT THE STARTER SOLENOID IS ELECTRICALLY HOT AT ALL TIMES.

The system consists of the following components:

- starter motor (11001)
- flywheel ring gear (6384)
- starter motor solenoid relay switch (11450)
- ignition switch (11572)
- battery (10655) and interconnecting wiring
- clutch pedal position switch (CPP)(11A152)/transmission range sensor

DESCRIPTION AND OPERATION (Continued)

Starter System

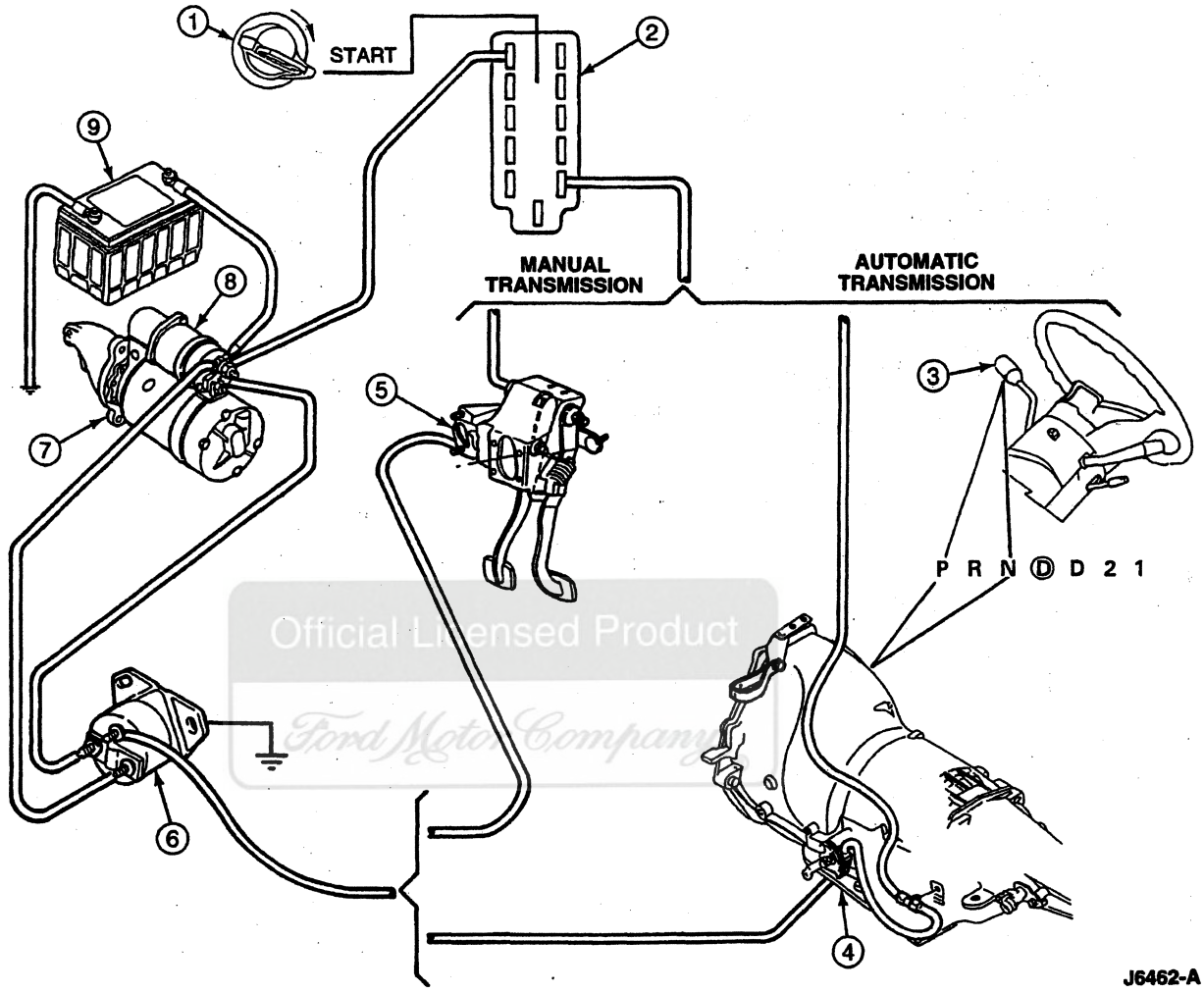

Item	Part Number	Description
1	3F532	Key Release Lever Spring
2	11572	Ignition Switch
3	7210	Gearshift Lever
4	7A247	Park / Neutral Position Switch

(Continued)

Item	Part Number	Description
5	11A152	Clutch Pedal Position Switch
6	11450	Starter Motor Solenoid Relay Switch
7	11001	Starter Motor
8	11390	Starter Solenoid
9	10655	Battery

Transmission Range (TR) Sensor

The electronic E4OD and 4R70W transmissions are equipped with a transmission range (TR) sensor. In addition to providing the powertrain control module (PCM)(12A650) with manual lever position (P R N OD D 2 1) signals, the sensor provides a neutral safety switch function. The circuit to the starter motor solenoid relay switch is interrupted in all gearshift lever (7210) positions except PARK and NEUTRAL.

Clutch Pedal Position Switch

On a manual transmission-equipped vehicle, starter motor operation is prevented by a clutch pedal position switch. When the clutch pedal (7519) is pressed, the switch completes the circuit between the ignition switch and the starter motor solenoid relay switch.

DESCRIPTION AND OPERATION (Continued)

Neutral Safety Switches

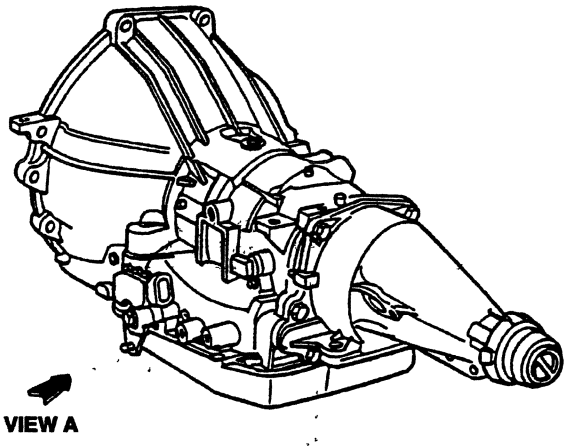

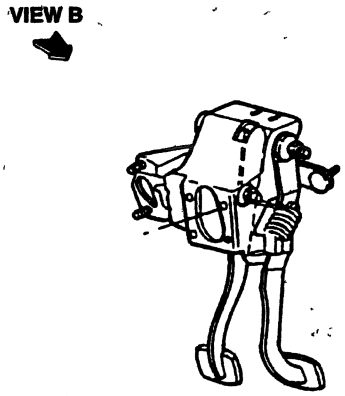

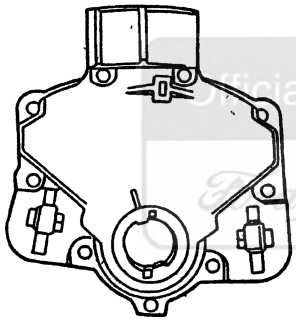

TRANSMISSION RANGE (TR) SENSOR VIEW A

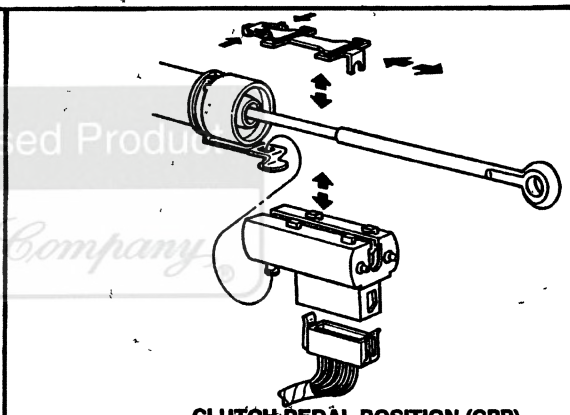

CLUTCH PEDAL POSITION (CPP) SWITCH VIEW B

DJ0163-A

Official Licensed Product
Ford Motor Company

Starter Motor

The gasoline and diesel engine starter motors are of the same basic construction and function essentially the same. Electrically, both motors consist of an armature, field coils and a brush assembly.

The field coils are mounted in the starter frame and are held in position by the pole shoes. Current flow through field coils generates magnetic fields that are concentrated by the pole shoes.

The armature consists of insulated wire loops connected to the segments on the commutator. Battery current supplied to the armature wires through the brushes and commutator generates magnetic fields in the armature. The repelling action between the magnetism generated in the armature loops and field coils forces the armature to rotate. The rotating armature is supported on bronze bushings located in the brush end housing and drive end housing.

In both starters, the armature operates through a planetary gearset. The end of the armature serves as the drive member or sun gear. The planetary gears, driven by the armature, are mounted on pins attached to the output shaft. The stationary member, or internal gear, is anchored to the motor frame. As the armature rotates, it drives the planetaries and output shaft around the internal gear. The gear reduction through the planetaries allows for a smaller starter with adequate torque to crank the engine.

DESCRIPTION AND OPERATION (Continued)

Starter Motor Geartrain, Gasoline

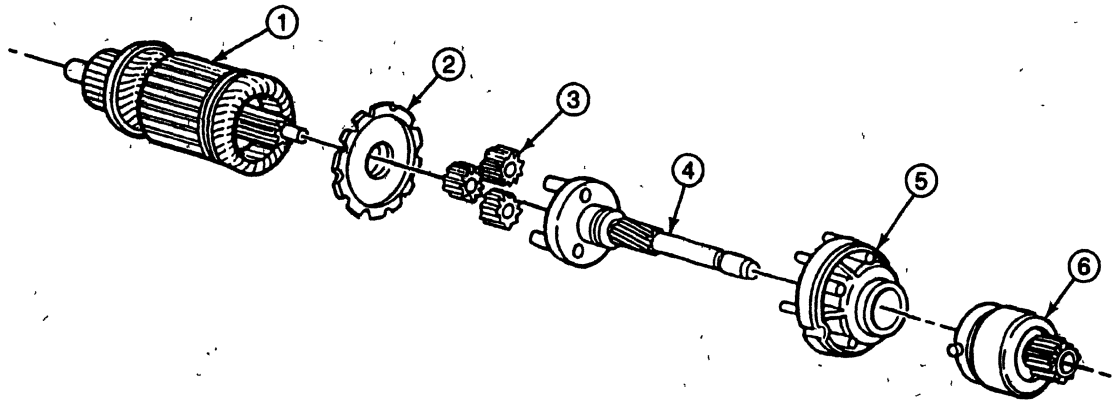

J6466-A

Item	Part Number	Description
1	11005	Armature (Sun Gear)
2	11A167	Retainer
3	11K190	Planetary Pinion Gears

Item	Part Number	Description
4	11A160	Output Shaft
5	11A165	Stationary (Internal Gear)
6	11350	Starter Drive

(Continued)

Official Licensed Product
Ford Motor Company

Starter Motor Geartrain, Diesel

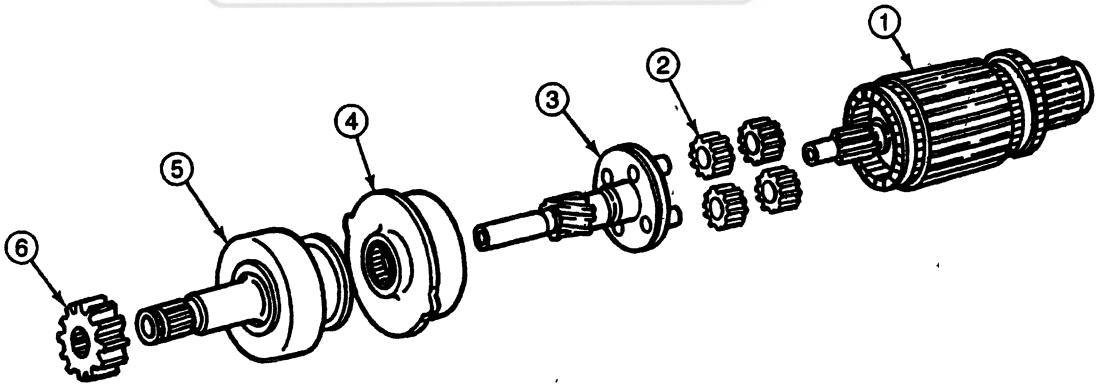

J6468-A

Item	Part Number	Description
1	11005	Armature (Sun Gear)
2	11K190	Planetary Pinion Gears
3	11355	Output Shaft

Item	Part Number	Description
4	11A165	Stationary (Internal Gear)
5	11350	Starter Drive
6	11363	Pinion Gear

(Continued)

DESCRIPTION AND OPERATION (Continued)

Starter Solenoid

The starter solenoid (11390) performs two functions. It shifts the starter drive pinion into engagement with the flywheel ring gear and connects the starter motor to the positive side of the battery.

The drive pinion is shifted through a lever which is connected to the solenoid plunger. The electrical circuit between the starter B- and M-terminals is closed by a contact disc which is also attached to the solenoid plunger.

Movement of the plunger is the result of a magnetic field generated by the pull-in and hold-in windings contained in the solenoid.

When the key is turned to START, current flows through both solenoid windings. This creates a magnetic field strong enough to pull in the plunger, shifting the overrunning clutch and drive pinion into mesh with the flywheel ring gear. As the plunger nears bottom, it strikes the contact disc and forces the disc against the starter motor contacts. This completes the battery circuit, and the starter motor operates.

When the contact disc closes the contacts, the pull-in winding loses its effect due to the voltage being equal at both ends of the winding. The hold-in coil continues to hold the plunger in the closed position and reduces the current needed by the solenoid. When the ignition switch is released, the current to the solenoid stops. The springs within the solenoid open the starter motor circuit contacts and shift the clutch and pinion assembly to the at-rest position.

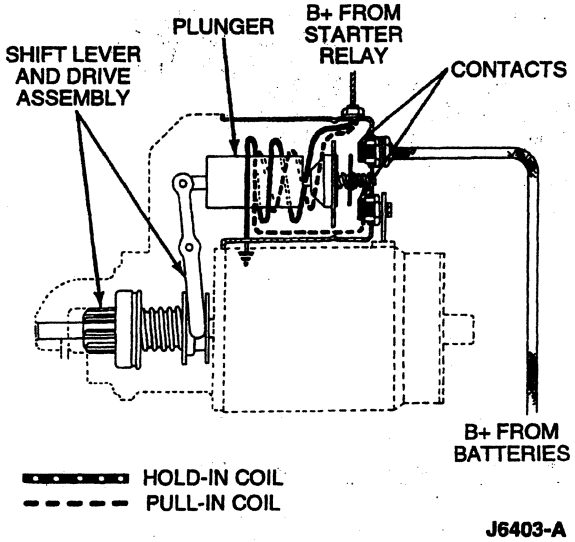

J6403-A

Overrunning Clutch

During engine cranking, the drive pinion is locked to the output shaft through an overrunning clutch. When the engine starts and picks up speed, the overrunning clutch allows the pinion to spin freely on the cranking motor driveshaft, preventing the engine from driving the cranking motor. This protects the armature from excessive speed during the brief period that the starter drive pinion gear remains enmeshed and the engine has started.

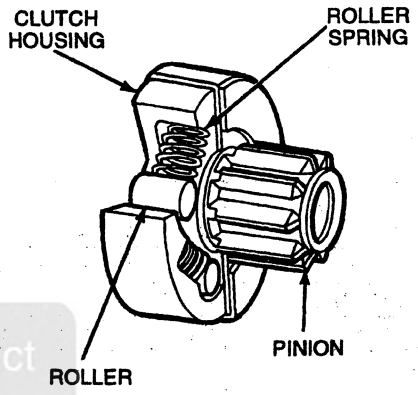

J6465-A

Ford Motor Company

DESCRIPTION AND OPERATION (Continued)

Starter Relay

The starter motor solenoid relay switch is an electrically operated switch used to connect the windings in the starter motor solenoid to the battery. The relay consists of a coil, plunger and contact disc. When the coil is connected to battery power through the ignition switch, it becomes an electromagnet. The magnetic force draws the plunger into the coil core. A disc connected to the plunger contacts the relay terminal, completing the battery to solenoid circuit. When the key or button is released, the magnetic field in the coil collapses and spring pressure returns the plunger and contact disc to the open circuit position.

NOTE: APPEARANCE OF STARTER RELAY SHOWN DIFFERS FROM ACTUAL RELAY. FUNCTIONALLY RELAYS ARE THE SAME.

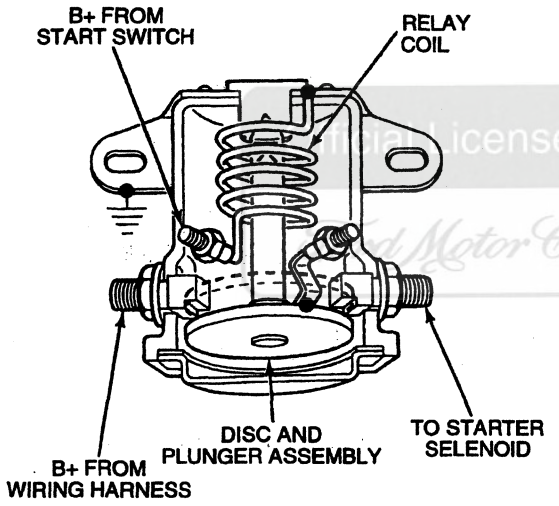

J6406-A

Sequence of Operation

1. On an automatic transmission-equipped vehicle, shift lever is positioned in PARK (P) or NEUTRAL (N) to close neutral switch. On a manual transmission-equipped vehicle, clutch pedal is pressed to close clutch pedal position switch (CPP)(11A152).
2. Key is turned to START position.
3. Battery voltage is connected to starter relay coil through ignition switch (11572). Current flow through relay coil generates magnetic field.
4. Iron core is drawn into relay coil core. Disc connected to core closes electrical contacts inside relay.
5. Electrical contacts and disc complete circuit between relay battery feed terminal and starter solenoid S-terminal.
6. Starter solenoid is energized, creating a magnetic field in solenoid pull-in and hold-in windings.
7. Iron plunger core is drawn into solenoid coil.
8. Lever connected to drive assembly engages drive pinion gear with flywheel ring gear.
9. When iron plunger core is all the way into the coil, its contact disc closes circuit between battery and motor terminals. As current flows to starter motor, solenoid pull-in coil is bypassed. Hold-in coil keeps drive pinion gear engaged with flywheel.
10. Current flow through field coils generates magnetic field.
11. Current flow through brushes and armature wires generates magnetic field. Repelling magnetic fields cause armature to rotate.
12. The gear remains engaged until key is released from START position. An overrunning clutch in the drive assembly protects the starter motor from excessive speeds during the brief period before the key is released from the START position (as the engine (6007) starts).

Ford Motor Company Licensed Product

DESCRIPTION AND OPERATION (Continued)

Starter System Sequence of Operation

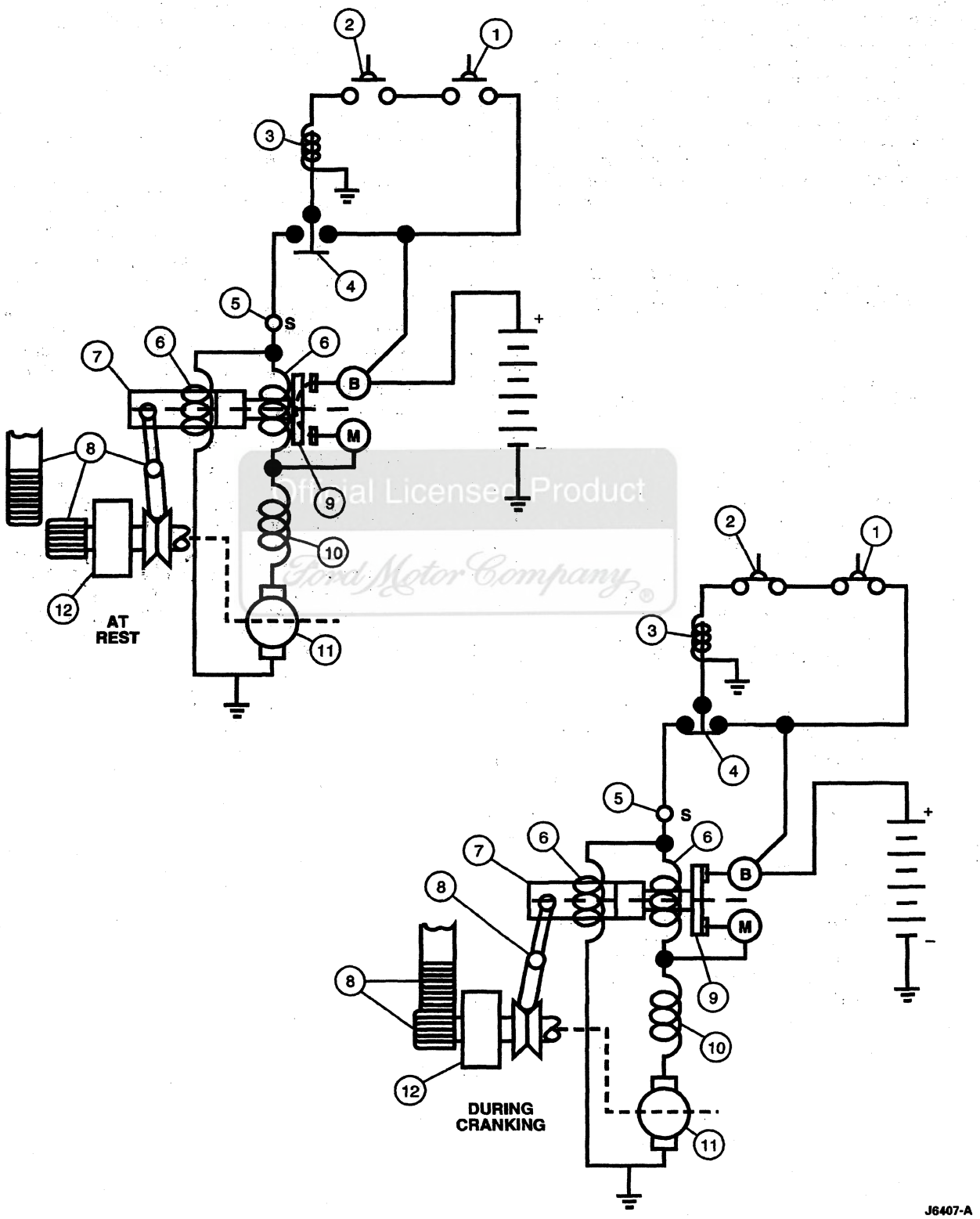

Official Licensed Product
Ford Motor Company

DESCRIPTION AND OPERATION (Continued)

Item	Part Number	Description
1	—	Key Start
2	—	Neutral Safety Switch
3	—	Starter Relay
4	—	Starter Relay Contact and Plunger Assy
5	—	Starter Solenoid S-Terminal
6	—	Starter Solenoid Hold-In and Pull-In Windings

(Continued)

Item	Part Number	Description
7	—	Starter Solenoid Plunger
8	—	Shift Lever Drive Pinion and Flywheel Ring Gear
9	—	Starter Solenoid Contact Disc
10	—	Starter Motor Field Coils
11	—	Starter Motor Armature
12	—	Overrunning Clutch

DIAGNOSIS AND TESTING

Electrical Schematic(s)

Refer to Electrical and Vacuum Troubleshooting Manual, Cell 20, Starting System for schematic and connector information.

Official Licensed Product

Inspection and Verification

1. **WARNING: WHEN SERVICING STARTER MOTOR OR PERFORMING OTHER UNDERHOOD WORK IN THE VICINITY OF THE STARTER MOTOR, BE AWARE THAT THE HEAVY-GAUGE BATTERY INPUT LEAD AT THE STARTER SOLENOID IS ELECTRICALLY HOT AT ALL TIMES.**

   Verify the vehicle owner's original concern by operating the starting system to duplicate the condition.

2. Inspect to determine if any of the following mechanical or electrical concerns apply.

VISUAL INSPECTION CHART

Mechanical	Electrical
• Starter motor mounting • Starter relay mounting	• Battery condition • Electrical connections at switches, relay and solenoid

Symptom Chart

Refer to the Electrical and Vacuum Troubleshooting Manual for the connector numbers in the pinpoint tests.

STARTING SYSTEM

Condition	Possible Source	Action
• Starter Motor Cranks Engine Slowly or No Cranking with Relay/Solenoid Clicking or Chattering	• Battery cable connections. • Battery. • Starter motor connections. • Starter motor.	• GO to Pinpoint Test A.
• Starter Motor Does Not Crank Engine	• Battery cable connections. • Battery. • Starter relay. • Starter motor ground circuit. • Starter motor. • Ignition switch.	• GO to Pinpoint Test B.
• Starter Motor Spins but Does Not Crank Engine	• Starter motor. • Flywheel ring gear.	• GO to Pinpoint Test C.
• Unusual Starter Motor Noise During Starter Motor Overrun	• Starter motor improperly mounted. • Starter motor. • Improper starter drive engagement to flywheel.	• GO to Pinpoint Test D.

DIAGNOSIS AND TESTING (Continued)

Pinpoint Tests

NOTE: Use Rotunda Digital Volt-Ohmmeter 014-00407 or equivalent to perform electrical pinpoint tests.

PINPOINT TEST A: STARTER MOTOR CRANKS ENGINE SLOWLY OR NO CRANKING WITH RELAY/SOLENOID CLICKING OR CHATTERING

Test Step		Result	Action to Take
A1	CHECK CONNECTIONS AT BATTERIES		
	• Inspect all battery cable connections for looseness and corrosion. • **Are battery connections clean and tight?**	Yes ▶ No ▶	GO to **A2**. CLEAN and TIGHTEN connections at batteries.
A2	STARTER LOAD TEST		
	• Perform starter load test. Refer to Component Tests in the Diagnosis and Testing portion of this section. • **Did starter pass load test?**	Yes ▶ No ▶	GO to **A3**. TEST batteries. REFER to Section 14-00 in the Body, Chassis Manual. If batteries are OK, GO to **A4**.
A3	CHECK FOR EXCESSIVE RESISTANCE		
	• Perform voltage drop tests. Refer to Component Tests in the Diagnosis and Testing portion of this section. • **Did starter circuit pass voltage drop tests?**	Yes ▶ No ▶	GO to **A4**. CLEAN circuit connections as necessary.
A4	STARTER NO-LOAD TEST		
	• Perform starter no-load test. Refer to Component Tests in the Diagnosis and Testing portion of this section. • **Did starter pass no-load test?**	Yes ▶ No ▶	Slow cranking is caused by excessive engine drag. REPAIR engine. REPAIR or REPLACE starter.

Official Licensed Product Ford Motor Company

PINPOINT TEST B: STARTER MOTOR DOES NOT CRANK ENGINE

Test Step		Result	Action to Take
B1	CHECK CONNECTIONS AT BATTERIES		
	• Inspect the battery terminals for loose or corroded connections. • **Are battery connections clean and tight?**	Yes ▶ No ▶	GO to **B2**. CLEAN and TIGHTEN connections at batteries.
B2	CHECK BATTERIES		
	• Check batteries. Refer to Section 14-00 in the Body, Chassis Manual. • **Are the batteries OK?**	Yes ▶ No ▶	GO to **B3**. CHARGE or REPLACE the batteries.
B3	STARTER RELAY FUNCTION		
	CAUTION: Make sure transmission is in neutral and parking brake is applied. • Connect remote starter switch between battery terminal at starter relay and starter relay S-terminal. • Press remote starter switch button. • **Does starter crank engine?**	Yes ▶ No ▶	GO to **B4**. If relay does not click, GO to **B9**. If relay clicks, GO to **B10**.
B4	BATTERY FEED TO STARTER RELAY		
	• With key in START position, check for battery voltage at starter relay S-terminal (R/BL). • **Is battery voltage present?**	Yes ▶ No ▶	SERVICE the S-terminal connection. If equipped with an automatic transmission, GO to **B5**. If equipped with a manual transmission, GO to **B7**.
B5	BATTERY FEED FROM TRANSMISSION RANGE (TR) SENSOR		
	• With key in START position, check for battery voltage at TR sensor terminal (R/LB). • **Is voltage present?**	Yes ▶ No ▶	REPAIR open in Circuit 32 (R/LB) between relay and sensor/switch. GO to **B6**.

DIAGNOSIS AND TESTING (Continued)

PINPOINT TEST B STARTER MOTOR DOES NOT CRANK ENGINE (Continued)

Test Step		Result ▶	Action to Take
B6	BATTERY FEED TO TRANSMISSION RANGE (TR) SENSOR		
	• With key in START position, check for battery voltage at TR sensor terminal (W/PK) • **Is voltage present?**	Yes ▶	CHECK TR sensor adjustment REFER to Section 07-01 for TR sensor REPLACE sensor/switch, if properly adjusted
		No ▶	REPAIR open in circuit between sensor/switch and starter relay
B7	BATTERY FEED TO CLUTCH PEDAL POSITION SWITCH		
	• With key in START position, check for battery voltage at CPP switch terminal (R/LB) • **Is voltage present?**	Yes ▶	GO to **B8**
		No ▶	REPAIR open in circuit between ignition switch and CPP switch
B8	CLUTCH PEDAL POSITION (CPP) SWITCH CONTINUITY		
	• With key in START position and clutch pedal pressed, check for battery voltage at CPP switch terminal (W/PK) • **Is voltage present?**	Yes ▶	REPAIR open in circuit between CPP switch and starter relay
		No ▶	REPLACE CPP switch
B9	STARTER RELAY GROUND		
	• Check for continuity between relay mounting bracket and clean chassis ground • **Is there continuity?**	Yes ▶	REPLACE starter relay
		No ▶	CLEAN ground connection
B10	BATTERY FEED TO STARTER SOLENOID		
	• With key in START position, check for battery voltage at starter solenoid S-terminal (R/BL) • **Is battery voltage present?**	Yes ▶	GO to **B11**
		No ▶	REPAIR open in Circuit 32 (R/BL) between relay and solenoid
B11	STARTER SOLENOID		
	• Check starter solenoid Refer to Component Tests in the Diagnosis and Testing portion of this section • **Is starter solenoid OK?**	Yes ▶	REMOVE starter and PERFORM no-load test REFER to Section 03-06A or Section 03-06B for removal procedure REFER to Component Tests in the Diagnosis and Testing portion of this section for test procedure
		No ▶	REPLACE starter solenoid

Ford Motor Company Licensed Product

DIAGNOSIS AND TESTING (Continued)

PINPOINT TEST C STARTER MOTOR SPINS BUT DOES NOT CRANK ENGINE

Test Step		Result ▶	Action to Take
C1	CHECK FLYWHEEL		
	• Remove the starter motor Refer to Section 03-06A or Section 03-06B • Inspect flywheel and drive pinion for damage or excessive wear 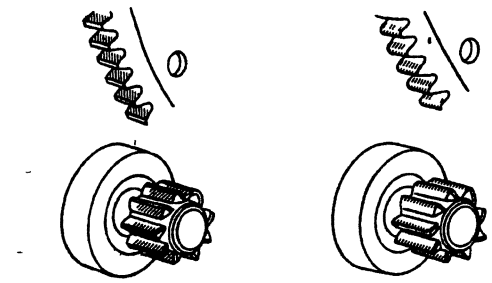 NORMAL WEAR PATTERN SMALL WEAR PATTERN MILLED CONDITION EXCESSIVE WEAR ON 2 OR 3 TEETH MILLED TOOTH-METAL BUILD-UP WILL NOT PERMIT ENGAGEMENT MILLED GEARS J2713-B • **Is flywheel or drive pinion worn or damaged?**	Yes ▶ No ▶	REPLACE the flywheel and drive pinion REFER to appropriate engine and starter sections in Group 03 GO to **C2**
C2	OVERRUNNING CLUTCH		
	• Check operation of overrunning clutch Refer to Drive Pinion Test under Component Tests in the Diagnosis and Testing portion of this section • **Does overrunning clutch operate properly?**	Yes ▶ No ▶	DISASSEMBLE starter and INSPECT starter REPLACE overrunning clutch

PINPOINT TEST D UNUSUAL STARTER MOTOR NOISE DURING STARTER MOTOR OVERRUN

Test Step		Result ▶	Action to Take
D1	CHECK STARTER MOTOR MOUNTING		
	• Inspect the starter motor mounting • Check the starter motor mounting bolts for looseness • **Is the starter motor mounted properly?**	Yes ▶ No ▶	GO to **D2** REMOUNT or REPLACE the starter motor
D2	CHECK STARTER DRIVE ENGAGEMENT		
	• Remove the starter motor Refer to Section 03-06A or Section 03-06B • Inspect the starter drive and flywheel for damage REFER to Pinpoint Test C1 • **Are the starter drive and flywheel OK?**	Yes ▶ No ▶	CHECK drive pinion overrunning clutch REFER to Component Tests in the Diagnosis and Testing portion of this section REPLACE as necessary

Licensed Product

DIAGNOSIS AND TESTING (Continued)

Component Tests

Starter

Load Test

Battery must be fully charged and serviceable before performing a starter load test Refer to Section 14-00 in the Body, Chassis Manual for battery inspection and test procedures

1 Set parking brake and shift transmission into neutral

2 Connect Rotunda Alternator, Regulator, Battery and Starter Tester (ARBST) 010-00725 or equivalent Make sure that current is not flowing through ammeter and heavy-duty carbon pile rheostat portion of circuit (rheostat at maximum counterclockwise position)

3 Connect remote starter switch across starter relay S- and battery terminals

4 Crank engine (6007) and determine exact reading on voltmeter

5 Stop cranking engine, and reduce resistance of carbon pile until voltmeter indicates same reading as that obtained while starter motor cranked the engine The ammeter will indicate starter current draw under load Check this with specifications Refer to Section 03-06A or Section 03-06B

Starter Motor Load Test

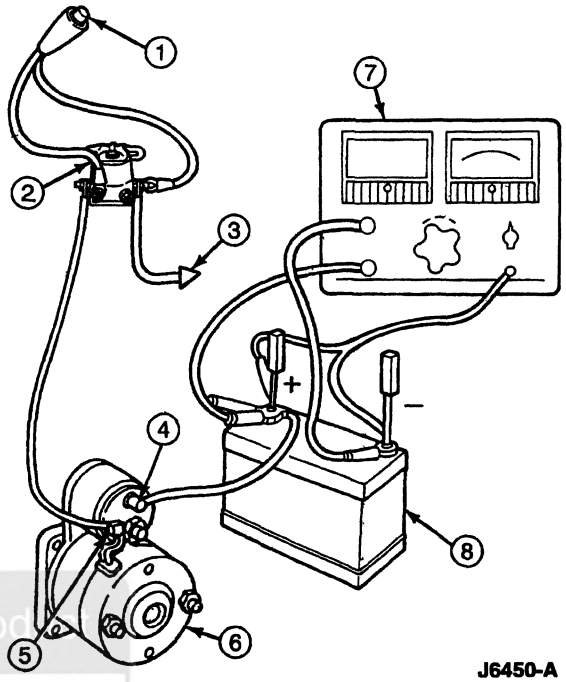

J6450-A

Item	Part Number	Description
1	—	Remote Starter Switch
2	—	Starter Relay
3	—	To Ignition Switch
4	—	Starter Solenoid B-Terminal
5	—	Starter Solenoid S-Terminal
6	11002	Starter Motor
7	010-00725	Alternator, Regulator, Battery and Starter Tester (ARBST)
8	—	Battery

Drive Pinion Test

If the overrunning clutch in the starter drive does not operate, the starter motor will engage but will not crank the engine

The starter motor must be removed to check the overrunning clutch Using a small pry bar, turn the drive pinion clockwise and counterclockwise In one direction, the pinion should freewheel In the other direction, the overrunning clutch should lock the pinion to the armature shaft If the pinion freewheels in both directions, replace the starter drive Refer to Section 03-06A or Section 03-06B for procedure

Ford Motor Company

DIAGNOSIS AND TESTING (Continued)

NOTE: The above check can be misleading. An overrunning clutch can lock when manually rotated but not hold under engine cranking torque. Replace the starter drive if indicated by reasonable diagnostic procedures.

No-Load Test

1. Remove starter motor. Refer to Section 03-06A or Section 03-06B.
2. Connect a fully charged battery, a Rotunda Alternator, Regulator, Battery and Starter Tester (ARBST) 010-00725 or equivalent and a remote starter switch to starter motor, as shown in following electrical schematic.
3. Close remote starter switch. Pinion should shift to crank position and motor should run smoothly.
4. While the starter motor is running, check voltmeter and ammeter readings.
5. Voltage must be greater than 11.0 volts and the amperage must be no more than 70 amps.
6. If voltage is lower than specified voltage, or amperage is higher than specified amperage, refer to following chart to determine cause and corrective action. If action to take requires starter disassembly and component inspection or testing, refer to Section 03-06A or Section 03-06B.

Starter Motor No-Load Test

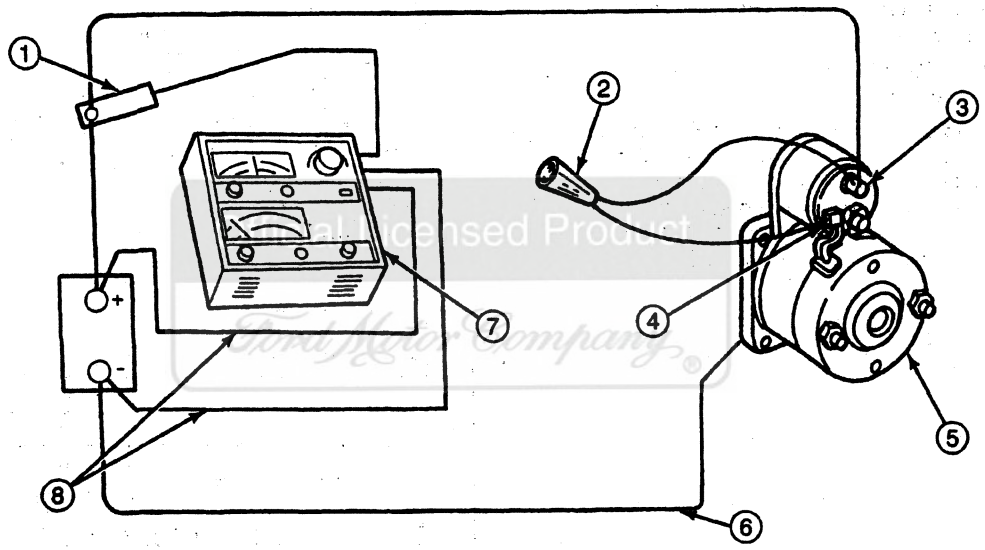

J6451-A

Item	Part Number	Description
1	—	Inductive Pickup
2	—	Remote Starter Switch
3	—	B-Terminal
4	—	S-Terminal
5	11002	Starter Motor

Item	Part Number	Description
6	—	Ground Connection to Starter
7	010-00725	Alternator, Regulator, Battery and Starter Tester (ARBST)
8	—	Voltmeter Leads

(Continued)

STARTER MOTOR NO-LOAD TEST RESULTS

TEST RESULT	PROBABLE SOURCE	ACTION TO TAKE
• Normal Current and Speed	• Cranking motor OK.	• RECHECK battery, switches and wiring, including voltage drop tests, if cranking motor operation on engine is slow or sluggish.
• Current Flow with Test Circuit Switch Open	• Solenoid contacts stuck closed.	• TEST and, if necessary, REPLACE solenoid assembly.
• Failure to Operate with Very Low or No Current	• Open solenoid winding. • Open field circuit.	• INSPECT and TEST solenoid assembly. • INSPECT and TEST frame and field assembly.

(Continued)

DIAGNOSIS AND TESTING (Continued)

STARTER MOTOR NO-LOAD TEST RESULTS (Cont'd)

TEST RESULT	PROBABLE SOURCE	ACTION TO TAKE
	• Open armature coil(s) or high insulation between commutator bars.	• INSPECT armature.
	• Broken brush spring(s) or worn brushes.	• INSPECT brushes and brush springs.
• Failure to Operate with High Current	• Frozen bearing, or other damage to drivetrain.	• INSPECT bearings, armature, driveshaft and related drive parts.
	• Direct ground in terminals or fields.	• INSPECT and TEST frame and field assembly, solenoid assembly, armature and brush installations for shorts.
• Low Speed with High Current	• Excessive friction in bushings or gear reduction unit, bent armature shaft or loose pole shoe, bent driveshaft.	• INSPECT bearings, armature, driveshaft, and gear reduction gears.
	• Shorted armature.	• INSPECT and TEST armature.
	• Grounded armature or fields.	• INSPECT and TEST frame and field coil assembly and armature.
• Low Speed with Normal (or Low) Current	• High internal electrical resistance caused by poor connections, defective leads or dirty commutator.	• INSPECT internal wiring, electrical connections and armature commutator.
	• Open solenoid winding.	• INSPECT and TEST solenoid assembly.
	• Open field circuit.	• INSPECT and TEST frame and field assembly.
	• Open armature coil(s) or high insulation between commutator bars.	• INSPECT armature.
	• Broken brush spring(s) or worn brushes.	• INSPECT brushes and brush springs.
• High Speed with High Current	• Shorted fields.	• INSPECT and TEST field and frame assembly.

Official Licensed Product
Ford Motor Company

Voltage Drop Tests

If the starter cranks slowly and the battery is satisfactory, there may be a concern in the starter or in the cranking circuit wiring. To determine if the concern is in the wiring, a voltage drop test must be performed on the following:

- motor feed circuit
- motor ground circuit
- individual cables

These tests are performed to determine if there is excessive resistance in the starter motor circuit. Always make the volt-ohmmeter connections at the component terminal rather than at the cable wiring end connector. Making a connection at the wiring end connector could result in false readings because the meter will not pick up a high resistance between the wiring connector and the component.

Motor Feed Circuit

A motor feed circuit test checks all wiring and connections between battery positive terminal and starter motor for excessive resistance.

1. Connect a remote starter switch between starter solenoid S-terminal and battery terminal.
2. Connect Rotunda Digital Volt-Ohmmeter 014-00407 or equivalent positive lead to battery positive (+) post. Connect Rotunda Digital Volt-Ohmmeter 014-00407 or equivalent negative lead to solenoid M-terminal.
3. Engage remote starter switch. Read and record voltage. Voltage reading must be 0.5 volt or less.
4. If voltage reading is higher than this, indicating excessive resistance, move the Rotunda Digital Volt-Ohmmeter 014-00407 or equivalent negative lead to starter solenoid B-terminal and repeat test. If voltage reading at B-terminal is lower than 0.5 volt, concern is either in connections at the solenoid or in solenoid contacts.
5. Remove cables from solenoid B-, S-, and M-terminals. Clean cables and connections and reinstall cables to proper terminals. Repeat Steps 1 through 4. If voltage drop reading is still higher than 0.5 volt when checked at M-terminal or lower when checked at B-terminal, concern is in solenoid contacts. Remove and replace starter motor or starter solenoid. Refer to Section 03-06A or Section 03-06B.
6. If the voltage reading taken at the starter solenoid B-terminal is still higher than 0.5 volt after cleaning cables and connections at starter solenoid, concern is either in positive (+) battery cable connection or in positive battery cable itself.
7. By moving the Rotunda Digital Volt-Ohmmeter 014-00407 or equivalent negative lead toward battery and checking each mechanical connection point, excessive voltage drop can be located. When high reading disappears, last mechanical point that was checked is concern.

DIAGNOSIS AND TESTING (Continued)

Motor Feed Circuit Voltage Drop Test

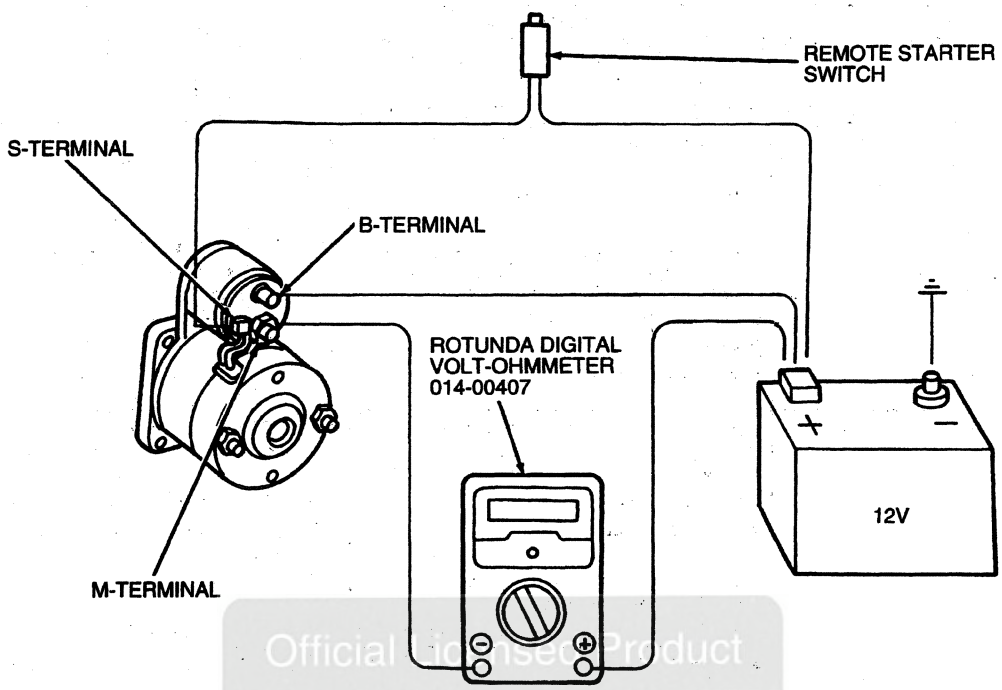

Official Licensed Product
Ford Motor Company

Motor Ground Circuit

A slow cranking condition can be caused by resistance in the ground or return portion of the cranking circuit. A starter ground circuit test checks the circuit between the starter motor ground and the battery negative terminal. Check the voltage drop in the ground circuit as follows.

1. Connect a remote starter switch between starter solenoid S-terminal and the battery terminal.
2. Connect Rotunda Digital Volt-Ohmmeter 014-00407 or equivalent positive lead to starter motor housing (connection must be clean and free of rust or grease). Connect Rotunda Digital Volt-Ohmmeter 014-00407 or equivalent negative lead to negative (-) battery terminal.
3. Engage remote starter switch and crank engine. Read and record the volt-ohmmeter reading. Reading must be 0.2 volt or less.
4. If voltage drop is more than 0.2 volt, clean negative cable connections at battery and body connections, and retest. If voltage drop is still too high, test individual cables.

DIAGNOSIS AND TESTING (Continued)

Motor Ground Circuit Voltage Drop Test

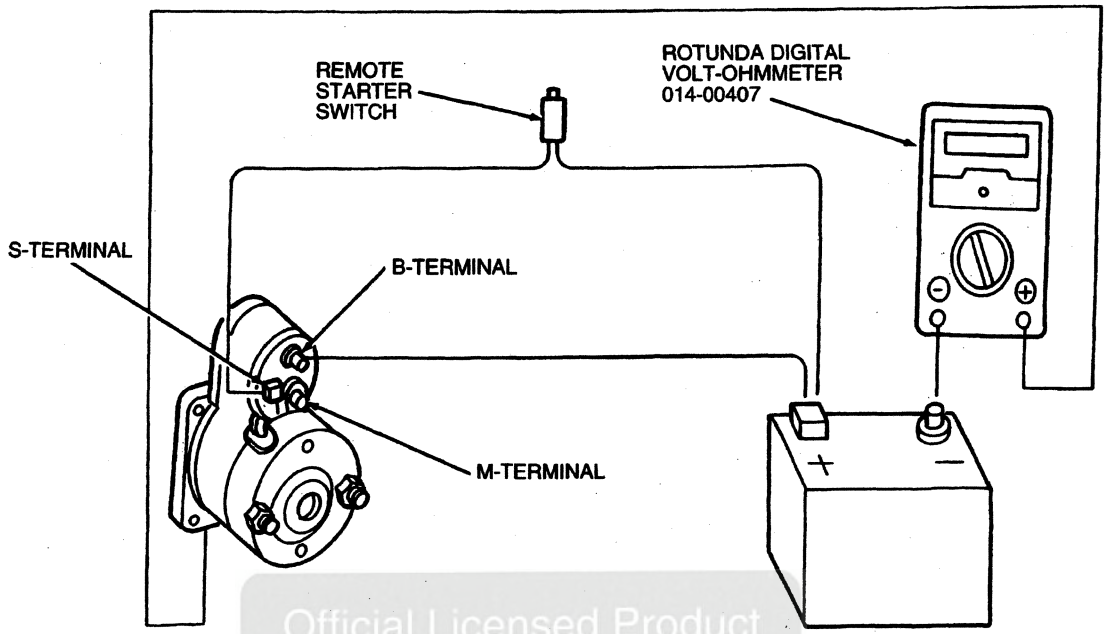

Official Licensed Product
Ford Motor Company

Individual Cable

A battery cable problem can produce symptoms similar to a dead battery, bad solenoid or weak starter motor. If the cables do not allow enough current flow, the starter will turn slowly or not at all.

1. Connect positive (+) lead of Rotunda 73 Digital Multimeter 105-R0051 or equivalent to battery positive (+) post. Connect negative (-) lead to starter solenoid B-terminal.
2. To locate excessive voltage drop in cable, move multimeter negative (-) lead toward battery and check each mechanical connection point. When high reading disappears, last mechanical connection point that was checked is the problem.

Starter Solenoid

1. Disconnect battery negative cable.
2. Using Rotunda Digital Volt-Ohmmeter 014-00407 or equivalent, check windings of solenoid assembly for continuity as follows:
   - Check resistance of solenoid pull-in and hold-in windings in series by measuring resistance between motor terminal and solenoid case. Resistance should be approximately 0.95 ohms.
   - An extremely high resistance reading indicates a break or fault in winding continuity. A very low resistance reading indicates a short or ground in the winding circuit. Either condition is cause for replacement of the solenoid assembly.

Starter Motor Solenoid Windings Test

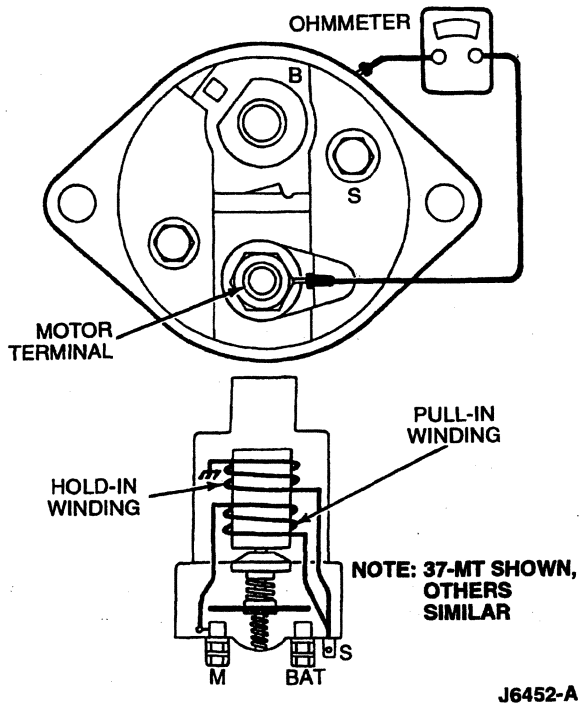

REMOVAL AND INSTALLATION

Starter Motor

Refer to Section 03-06A or Section 03-06B

Starter Relay

Removal

1 **WARNING WHEN SERVICING STARTER MOTOR RELAY OR PERFORMING ANY MAINTENANCE IN THE AREA OF THE STARTER MOTOR RELAY, NOTE THE HEAVY-GAUGE INPUT LEAD CONNECTED TO THE RELAY IS HOT AT ALL TIMES**

Disconnect battery ground cable

2 Tag all wires to aid in installation

3 Remove wiring terminal attaching nuts

4 Remove wiring from starter relay terminals

5 Remove attaching screws and starter relay

Installation

1 Follow removal procedure in reverse order

Starter Relay Location

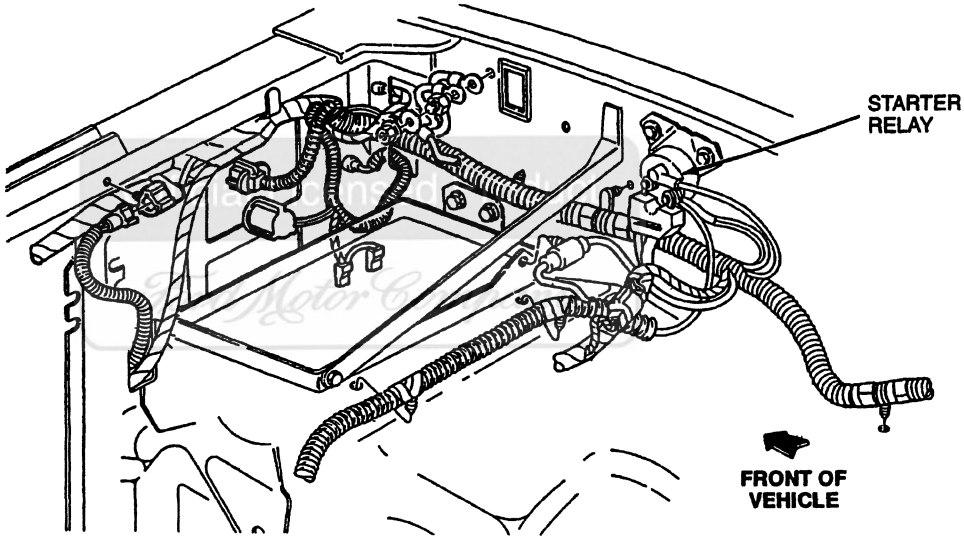

DISASSEMBLY AND ASSEMBLY

Starter Motor

Refer to Section 03-06A or Section 03-06B

SERVICE PROCEDURES

Road Service

For a starter motor that cranks the engine very slowly, connect a 12-volt booster battery to the system Refer to Jump-Starting in the Service Procedures portion of this section

Jump-Starting

The following instructions for starting the vehicle with jumper cables contain precautions that should be observed to avoid possible injury or damage to the vehicle

SERVICE PROCEDURES (Continued)

WARNING: HYDROGEN AND OXYGEN GASES ARE PRODUCED DURING NORMAL BATTERY OPERATION. THIS GAS MIXTURE CAN EXPLODE IF FLAMES, SPARKS OR LIGHTED TOBACCO ARE BROUGHT NEAR THE BATTERY. WHEN CHARGING OR USING A BATTERY IN AN ENCLOSED SPACE, ALWAYS PROVIDE VENTILATION AND SHIELD YOUR EYES. DO NOT DISCONNECT THE BATTERY OF THE VEHICLE TO BE STARTED. DISCONNECTING THE BATTERY COULD DAMAGE THE VEHICLE'S ELECTRONIC SYSTEM.

WARNING: TO AVOID ANY POSSIBILITY OF INJURY, USE PARTICULAR CARE WHEN CONNECTING A BOOSTER BATTERY TO A DISCHARGED BATTERY.

CAUTION: Headlamp filament failures can occur when vehicle with dead battery is jump-started with the headlamp switch on.

CAUTION: Use only a 12-volt jumper system. A 12-volt starting motor and other vehicle components can be damaged beyond service by connecting it to a 24-volt power supply (two 12-volt batteries in series, or a 24-volt motor generator set).

NOTE: Battery top has warnings.

To prevent any damage to electrical or lighting components during jump-starting, proceed as follows.

NOTE: Follow procedure in exact sequence.

1. Position vehicles so jumper cables will reach, being careful that vehicles do not touch.
2. Turn all lights off before and during jump-starting.
3. Turn on heater blower motor to remove transient voltage.
4. Avoid contact with any moving engine parts.
5. Make connections in numerical order. Disconnect in reverse order.
6. Connect ends of one cable to the positive (+) terminal of each battery, starting with the discharged battery (1 in the following illustration) and going to the booster battery (2 in the following illustration).

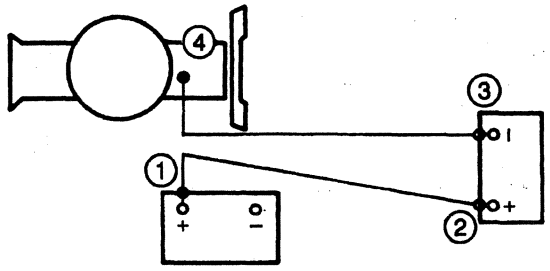

J2704-C

7. **WARNING: MAKING THE FINAL CABLE CONNECTION COULD CAUSE AN ELECTRICAL SPARK NEAR THE BATTERY AND COULD CAUSE AN EXPLOSION. REFER TO WARNING AT THE BEGINNING OF THE JUMP-STARTING PROCEDURE.**

   Connect one end of other cable to negative (-) terminal of good battery (3 in the preceding illustration). Connect other end of the same cable to engine block on vehicle being started (4 in the preceding illustration), NOT TO NEGATIVE (-) TERMINAL OF BATTERY.
8. Make sure jumper cables are not in the way of moving engine parts.
9. Start engine of vehicle with good battery. Do not crank engine continuously for more than 30 seconds at a time. Allow 2 minutes for starter motor to cool between cranking. Run engine (6007) at a moderate speed.
10. Start engine of vehicle with discharged battery. Follow starting instructions in the Owner Guide.
11. Leave all switches off except heater blower motor. Reduce engine speed to idle on both vehicles to prevent possible damage to vehicle electrical system.
12. Make certain that engines are at idle speed before disconnecting jumper cables.
13. Remove cable from engine block first, then other end of negative cable.
14. Remove ends of positive cable.

Official Licensed Product Ford Motor Company

CLEANING AND INSPECTION

Cleaning

CAUTION: Do not wash the starter drive because the solvent will wash out the lubricant and cause the starter drive to slip.

Wipe field coils, armature, commutator and armature shaft with a clean cloth. Wash springs, shims, thrust washer, trip collar, locking collar and brush end housing assembly in solvent, and dry the parts.

Inspection

Armature

1. Inspect armature for broken or burned insulation and unsoldered connections. Inspect commutator surface for grooves, and check for runout.
2. If surface of commutator is rough or more than 0.051 mm (0.002 inch) out of round, turn it down. Do not undercut the mica.
3. Inspect for gear teeth that are broken or that show evidence of step wear or root interference.

CLEANING AND INSPECTION (Continued)

4 Check armature as follows for shorts, opens or grounds, using suitable test equipment and instruments (test lamp must be 110 volts or less)

- Rotate armature in a growler, holding a steel strip, such as a hacksaw blade, against the armature If a short circuit is present, the steel strip will vibrate in that area
- Check the armature for grounds, using a test lamp or ohmmeter There must be no continuity between the armature shaft and any point on the commutator
- Check for opens by visually inspecting the points where the armature conductors join the commutator A poor connection often will be indicated by signs of arcing or burning of the commutator
- Replace armatures that are shorted, grounded or show evidence of opens

Bushings

Inspect the drive end housing bushing and the brush end plate bushing (11052) for excessive wear On a diesel engine starter, inspect the bushing in the output shaft Replace the bushing if worn or scored

1 The bushings can be removed using a puller of the appropriate size.

2 Immerse new bushings in engine oil (SAE 30 or 40) for at least 20 minutes before installation

3 NOTE Do not ream the bushings after installation since the self-lubricating qualities of the bushing can be damaged

Press or tap the new bushing into position, using a driver

Bearings (Diesel Engine Only)

A roller bearing is used to support the front of the armature in the brush end plate The drive assembly is supported on a similar roller bearing pressed into the drive end housing A needle-type bearing, pressed into the internal gear, supports the output shaft

Check the bearings for abnormal noise, looseness or binding If any of these problems exist, remove the bearing using a puller Replace the bearing

Starter Frame and Magnet

Check the starter frame and magnet for damage and replace as necessary

Field Coil Inspection

Check field coil windings with a growler lamp for shorts to housing or pole shoes Connect one growler lamp lead to starter motor housing Connect other growler lead to each field coil brush lead, in turn A short circuit will light growler lamp

Brush and Brush Holder

1 Check brushes for free movement in brush holders Inspect brushes for excessive wear. Where brush leads are insulated, make sure insulation is not burned or worn

2 The brushes should be well seated to commutator, that is, contacting commutator over at least 60 percent of brush contact area If not, fit brushes to commutator with fine sandpaper until desired seating area is obtained Do only one brush at a time Clean brushes and commutator with compressed air Make sure no abrasive particles from sandpaper are embedded in the contact area of brushes

3 Mark each brush and brush holder with which it was seated to permit assembly in the same position

Brush Spring Tension Inspection

1 NOTE The spring force is measured at the moment the brush spring separates from the brush

Using a spring balance, measure the force of the brush spring

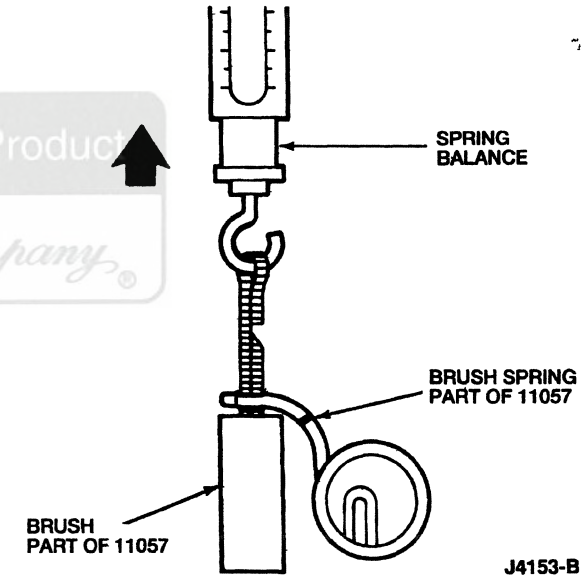

2 Replace the brush spring if the force is below specification

- Gasoline engines 18 N (64 oz)
- Diesel engines 34 N (122 oz)

Starter Drive and/or Flywheel Ring Gear Inspection

Inspect drive assembly and flywheel ring gear for the following

- Pinion gear turns roughly or turns in both directions
- Pinion gear and ring gear teeth broken or showing evidence of step wear
- Deep scoring or other damage to shift lever collar

CLEANING AND INSPECTION (Continued)

Replace drive assembly or ring gear if damaged If a new drive assembly is to be installed, be sure it has the same number of teeth as replaced component Install new drive on the lever housing and then on the armature shaft and check for free movement Then, check pinion depth adjustment

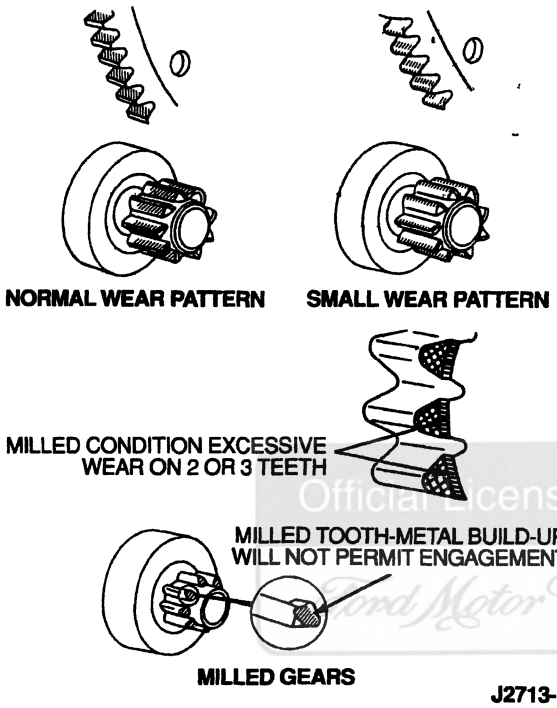

SPECIAL SERVICE TOOLS/EQUIPMENT

ROTUNDA EQUIPMENT

Model	Description
010-00725	Alternator, Regulator, Battery and Starter Tester (ARBST)
014-00407	Digital Volt Ohmmeter
105-R0051	73 Digital Multimeter

Official Licensed Product
Ford Motor Company

SECTION 03-06A Starting System, Gasoline Engines

SUBJECT	PAGE
VEHICLE APPLICATION	03-06A-1
DESCRIPTION AND OPERATION	
Starter System	03-06A-1
DIAGNOSIS AND TESTING	
Starter System	03-06A-1
REMOVAL AND INSTALLATION	
Starter Motor	03-06A-2
Starter Relay	03-06A-1
DISASSEMBLY AND ASSEMBLY	
Armature Replacement, Starter Motor	03-06A-4
DISASSEMBLY AND ASSEMBLY (Cont'd.)	
Bushing Replacement	03-06A-5
Starter Drive Replacement	03-06A-4
Starter Motor	03-06A-3
SERVICE PROCEDURES	
Starter System	03-06A-5
CLEANING AND INSPECTION	
Starter System	03-06A-5
SPECIFICATIONS	03-06A-5

VEHICLE APPLICATION

F-250 Heavy Duty, F-350 and F-Super Duty

DESCRIPTION AND OPERATION

Starter System

All gasoline engines are equipped with a 12-volt planetary gear reduction starter motor (11001). For additional information, refer to Section 03-06.

Official Licensed Product
Ford Motor Company

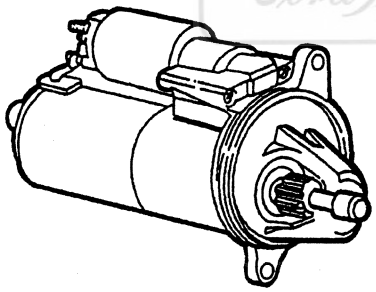

STARTER MOTOR
11002

J6210-A

DIAGNOSIS AND TESTING

Starter System

Refer to Section 03-06.

REMOVAL AND INSTALLATION

Starter Relay

Refer to Section 03-06.

REMOVAL AND INSTALLATION (Continued)

Starter Motor

WARNING: WHEN SERVICING STARTER MOTOR OR PERFORMING ANY MAINTENANCE IN THE AREA OF THE STARTER MOTOR, NOTE THE HEAVY GAUGE INPUT LEAD CONNECTED TO THE STARTER SOLENOID IS HOT AT ALL TIMES.

Removal

1. Disconnect battery ground cable (14301).
2. Raise vehicle on a hoist. Refer to Section 00-02.
3. Remove snap-on starter motor heat shield (11006).
4. **CAUTION: When disconnecting hardshell connector at starter motor solenoid S-terminal, grasp the plastic shell and pull off. Do not pull on wire. Be careful to pull straight off to prevent damage to connector and S-terminal. If any part of connection is damaged, replace damaged components.**

   Disconnect push-on connector from starter solenoid S-terminal.
5. Remove cover from M- and B-terminals.
6. Remove attaching nut and battery cable.
7. Remove attaching bolts and starter motor (11001).

Installation

1. Position starter motor on engine and install attaching bolts.
2. Tighten attaching bolts to 20-27 N·m (15-20 lb-ft).
3. Connect starter solenoid S-terminal wire. Be careful to push straight on and make sure connector locks in position with a notable click or detent.
4. Install battery cable and attaching nut on solenoid B-terminal. Tighten nut to 9-13.5 N·m (80-120 lb-in).
5. Install M- and B-terminal cover.
6. Install starter motor solenoid heat shield.
7. Lower vehicle.
8. NOTE: When the battery (10655) has been disconnected and reconnected, some abnormal drive symptoms may occur while the powertrain control module (PCM)(12A650) relearns its adaptive strategy. The vehicle may need to be driven 16 km (10 miles) or more to relearn the strategy.

   Connect battery ground cable.

Ford Motor Company Licensed Product

DISASSEMBLY AND ASSEMBLY

Starter Motor

NOTE: Although disassembly and service procedures are shown for the starter motor in this section, it is recommended that the starter motor (11001) be returned to Ford Return Parts Division for analysis and review.

Starter Motor, Disassembled View

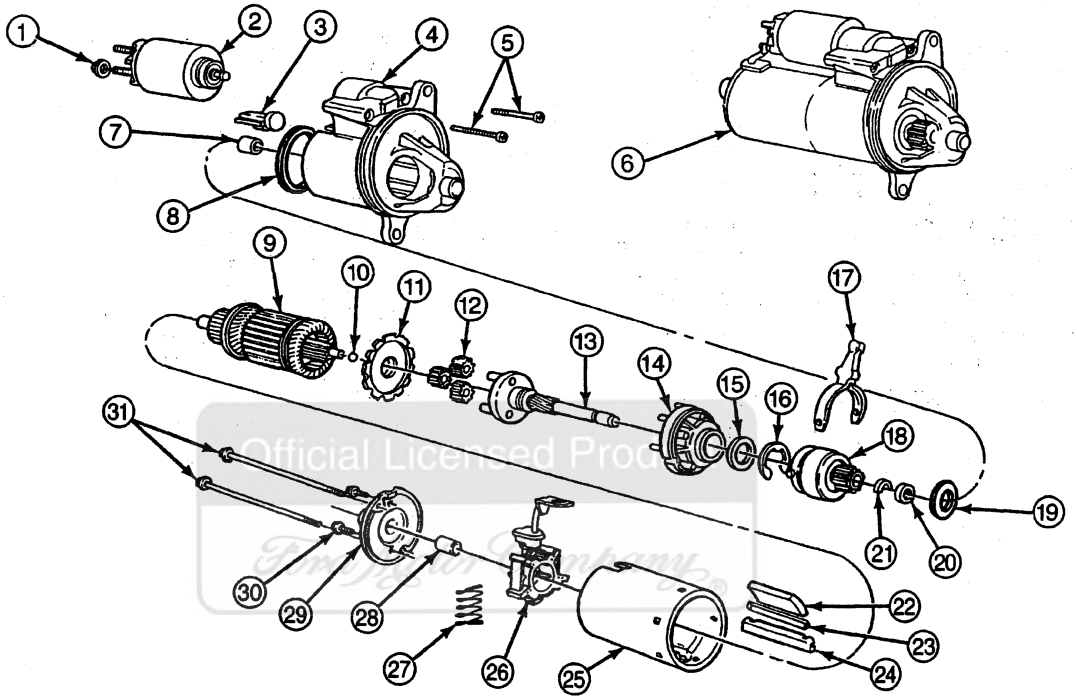

J6438-A

Item	Part Number	Description
1	N805403	Terminal Nut
2	11390	Starter Solenoid
3	11A171	Seal
4	11130	Drive End Housing
5	N805405	Solenoid Screw (2 Req'd)
6	11001	Starter Motor
7	11135	Bushing
8	11A196	Drive End Housing Seal Ring
9	11005	Starter Motor Armature
10	11A172	Armature Thrust Ball
11	11A167	Planet Gear Retainer
12	11K190	Planet Gear
13	11355	Output Shaft
14	11A165	Stationary Gear
15	11036	Pinion Thrust Washer
16	N805404	Truarc® E-Ring

(Continued)

Item	Part Number	Description
17	11067	Drive Lever and Pin
18	11350	Starter Drive
19	11180	Drive End Housing Seal
20	11223	Stop Ring Retainer
21	11222	Starter Drive Stop Ring
22	—	Magnet Pole Piece (6 Req'd) (Part of 11075)
23	—	Pole Shunt (6 Req'd) (Part of 11075)
24	—	Magnet Retainer (6 Req'd) (Part of 11075)
25	11075	Starter Frame and Magnet
26	11061	Brush Holder
27	11059	Brush Spring
28	—	Bushing (Part of 11049)
29	11049	Brush End Plate and Bushing
30	N805406	Brush Plate Screw (2 Req'd)
31	N805428	Through-Bolt (2 Req'd)

DISASSEMBLY AND ASSEMBLY (Continued)

Disassembly

1. Remove positive brush connector from solenoid (M) terminal.
2. Remove retaining screws and starter solenoid.
3. Remove through-bolts and separate drive end housing from starter frame. Remove housing seal assembly from drive end housing. Remove drive and gear assembly from drive end housing.
4. Remove drive lever from starter drive (11350). Remove starter drive stop ring (11222) and stop ring retainer (11223) from output shaft (11355), then remove starter drive from shaft assembly. Push Truarc® E-ring off stop ring retainer, and separate stationary gear (11A165) from output shaft.
5. Remove brush plate screws and brush end plate from starter frame. Remove brush holder (11061) and push armature assembly out of starter frame.

Assembly

1. Install armature in starter frame.
2. Apply a thin coating of Ford Teflon® Lubricant D2AZ-19590-A or equivalent meeting Ford specification ESB-M1C111-A on both ends of armature shaft and spline.
3. Install brush holder. Make sure brushes fit over armature commutator.
4. Apply grease to bushing bore in brush end plate.
5. Push back grommet onto starter frame and attach brush end plate with brush plate screws. Tighten to 2.3-3.4 N·m (20-30 lb-in).
6. Apply grease to output shaft spline and place stationary gear over shaft assembly.
7. Install pinion thrust washer (11036) and push Truarc® E-ring onto shaft assembly.
8. Place starter drive onto output shaft and install starter drive stop ring and stop ring retainer.
9. Attach drive lever to starter drive.
10. Grease and install planet gears (11K190).
11. Apply grease to drive end housing bushing bore (approximately one-quarter full).
12. Install drive gear assembly into drive end housing, making sure to line up bolt holes in drive gear assembly and drive end housing.
13. Place planet gear over drive gear assembly.
14. Install housing seal assembly into drive end housing.
15. Position starter frame to drive end housing and install through-bolts. Tighten to 5.0-9.5 N·m (45-84 lb-in).
16. Correctly position starter solenoid (11390) to drive end housing. Make sure that solenoid plunger is attached through drive lever (bottom solenoid terminal (M) should have a metal strip attached to it). Tighten starter solenoid bolts to 5.1-9.6 N·m (45-85 lb-in).
17. Attach positive brush connector to starter solenoid (bottom terminal). Tighten nut to 9-13.5 N·m (80-120 lb-in).
18. Check that starter motor no-load current draw is within specification. Refer to Section 03-06 for testing procedures.

Starter Drive Replacement

1. Remove positive brush connector from solenoid (M) terminal. Remove solenoid retaining screws and remove starter solenoid.
2. Remove through-bolts and separate drive end housing from starter frame.
3. Remove housing seal assembly from drive end housing.
4. Remove starter drive (11350) from drive end housing and detach drive lever.
5. Remove starter drive stop ring (11222) and stop ring retainer (11223) from shaft assembly and then remove starter drive.
6. Apply a thin coating of Ford Teflon® Lubricant D2AZ-19590-A or equivalent meeting Ford specification ESB-M1C111-A on output shaft (11355) spline.
7. Install new drive assembly on output shaft. Install new starter drive stop ring and stop ring retainer. Attach drive lever.
8. Partially fill drive end housing bushing bore with grease (approximately one-quarter full). Install drive gear assembly in drive end housing, making sure to line up bolt holes in drive gear assembly and drive end housing.
9. Install housing seal assembly in drive end housing.
10. Position starter frame to drive end housing and install through-bolts. Tighten to 5.0-9.5 N·m (45-84 lb-in).
11. Install starter solenoid.

Armature Replacement, Starter Motor

1. Remove positive brush connector from solenoid motor (M) terminal.
2. Remove through-bolts and separate starter frame from drive gear assembly and drive end housing.
3. Remove brush end plate screws, brush end plate and brush holder (11061) from starter frame. Remove armature assembly from starter frame.
4. Install new armature assembly in starter frame. Apply a thin coating of Ford Teflon® Lubricant D2AZ-19590-A or equivalent meeting Ford specification ESB-M1C111-A on both ends of armature shaft.

Ford Motor Company Licensed Product

DISASSEMBLY AND ASSEMBLY (Continued)

5. Install brush holder, making sure that brushes fit over armature commutator. Push black grommet onto starter frame. Apply grease to bushing bore in brush end plate and attach to starter frame.
6. Position starter frame to drive gear assembly and drive end housing. Install through-bolts. Tighten to 5.0-9.5 N·m (45-84 lb-in).
7. Attach positive brush connector to starter solenoid (bottom terminal). Tighten nut to 9-13.5 N·m (80-120 lb-in).
8. Check that starter motor no-load current draw is within specification. Refer to Section 03-06 for testing procedure.

Bushing Replacement

Refer to Section 03-06.

SERVICE PROCEDURES

Starter System

Refer to Section 03-06.

CLEANING AND INSPECTION

Starter System

Refer to Section 03-06.

Official Licensed Product
Ford Motor Company

SPECIFICATIONS

STARTER SPECIFICATIONS

Starter Motor						Max. Load	No Load	Starter Brushes			
Motor Diameter		Current Draw Under Normal Load	Normal Engine Cranking Speed	Min. Stall Torque @ 5 Volts				Mfg. Length		Spring Tension	
mm	Inches	Amps	rpm	N·m	Lb-Ft	Amps	Amps	mm	Inches	N	Oz
78	3	140-200	200-250	14.7	11.0	800	70 ± 10	16.8	0.66	18	64

Maximum commutator runout is 0.12 mm (0.005 inch). Maximum starting circuit voltage drop (battery positive terminal to starter terminal) at normal engine temperature is 0.5 volt.

TORQUE SPECIFICATIONS

Description	N·m	Lb-Ft	Lb-In
Solenoid Bolt	5.1-9.6	—	45-85
M-Terminal Nut	9.0-13.5	—	80-120
B-Terminal Nut	9.0-13.5	—	80-120
Through-Bolt	5.0-9.5	—	45-84
Mounting Bolt	20-27	15-20	—
Brush Plate Screw	2.3-3.4	—	20-30
Drive End Housing	5.0-9.5	—	45-84

LUBRICANT/ADHESIVE/CLEANER SPECIFICATIONS

Description	Part Number	Ford Specification
Ford Teflon® Lubricant	D2AZ-19590-A	ESB-M1C111-A

SECTION 03-06B Starting System, Diesel Engine

SUBJECT	PAGE
VEHICLE APPLICATION	03-06B-1
DESCRIPTION AND OPERATION	
Starter System	03-06B-1
DIAGNOSIS AND TESTING	
Starter System	03-06B-1
REMOVAL AND INSTALLATION	
Starter Motor	03-06B-1
Starter Relay	03-06B-1
DISASSEMBLY AND ASSEMBLY	
Armature Replacement, Starter Motor	03-06B-4
DISASSEMBLY AND ASSEMBLY (Cont'd.)	
Bearings	03-06B-4
Brush Replacement	03-06B-4
Starter Drive Replacement	03-06B-4
Starter Motor	03-06B-2
ADJUSTMENTS	
Starter Drive Pinion Depth Adjustment	03-06B-4
SPECIFICATIONS	03-06B-5

VEHICLE APPLICATION

F-250 Heavy Duty, F-350 and F-Super Duty

DESCRIPTION AND OPERATION

Starter System

The 7.3L direct injection (DI) turbo diesel engine is equipped with a 12-volt gear reduction starter. For additional information, refer to Section 03-06.

Official Licensed Product Ford Motor Company

DIAGNOSIS AND TESTING

Starter System

Refer to Section 03-06.

REMOVAL AND INSTALLATION

Starter Relay

Refer to Section 03-06.

Starter Motor

Removal

1. Disconnect battery ground cable (14301).
2. Raise vehicle on a hoist.
3. Disconnect wiring from starter terminals.
4. Remove attaching bolts and remove starter motor (11001).

Installation

1. Position starter motor and hand-start attaching bolts.
2. Snug all bolts while holding starter motor squarely against its mounting surface and fully inserted into pilot hole.
3. Tighten bolts to 20-27 N·m (15-20 lb-ft).
4. Connect wire at solenoid S-terminal.
5. Position battery cable on solenoid B-terminal and install attaching nut. Tighten nut to 9-14 N·m (80-124 lb-in).
6. NOTE: When the battery (10655) has been disconnected and reconnected, some abnormal drive symptoms may occur while the powertrain control module (PCM)(12A650) relearns its adaptive strategy. The vehicle may need to be driven 16 km (10 miles) or more to relearn the strategy.

   Lower vehicle and connect battery ground cable. Check operation of starter motor.

REMOVAL AND INSTALLATION (Continued)

Starter Motor, Disassembled View

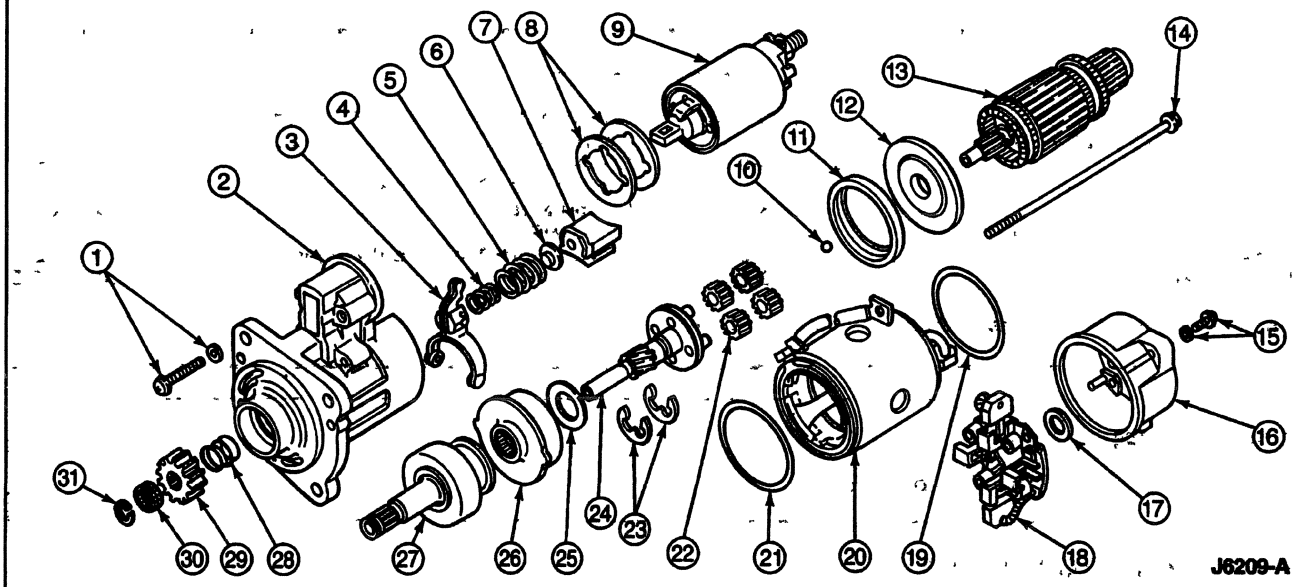

Item	Part Number	Description
1	—	Screw and O-Ring (Part of 115091)
2	11130	Drive End Housing
3	11067	Drive Lever and Pin
4	—	Spring (Part of 11103)
5	—	Spring (Part of 11103)
6	—	Pivot Plate (Part of 11103)
7	—	Packing (Part of 11103)
8	11135	Shims
9	11390	Starter Solenoid
10	—	Steel Ball (Part of 11005)
11	—	Seal Ring (Part of 11005)
12	11130	Center Plate
13	11005	Starter Motor Armature
14	11A147	Through-Bolt
15	—	Screw and O-Ring (Part of 11049)

(Continued)

Item	Part Number	Description
16	11049	Brush End Plate and Bushing
17	—	Washer (Part of 11005)
18	11061	Brush Holder
19	11217	Seal (Rear)
20	11083	Frame Assembly
21	11217	Seal (Front)
22	—	Pinions (Part of 11355)
23	—	E-Clips (Part of 11355)
24	11355	Output Shaft
25	—	Thrust Washer (Part of 11355)
26	11A165	Stationary Gear
27	11350	Starter Drive
28	—	Spring (Part of 11350)
29	11363	Pinion
30	11223	Stop Ring
31	—	Stop Ring Retainer (Part of 11350)

DISASSEMBLY AND ASSEMBLY

Starter Motor

Disassembly

1 Remove nut and disconnect wire to solenoid M-terminal

2 Remove screws securing starter solenoid (11390) to drive end housing Remove starter solenoid and shims

3 Remove through-bolt and brush holder screws from brush end plate and bushing (11049)

4 Remove brush end plate and bushing Do not lose spring washer inside of brush end plate and bushing

5 Lift brush springs for the field coil brushes and remove field coil brushes from brush holder (11061) Remove brush holder

6 Remove starter motor armature (11005) and frame from drive end housing Remove steel ball from gear end of starter motor armature

DISASSEMBLY AND ASSEMBLY (Continued)

7. Remove center plate, seal ring, and gear assembly from drive end housing.
8. Turn drive end housing so pinion end is up.
9. Set socket of appropriate size on stop ring and strike socket with a hammer, pushing stop ring down onto shaft, revealing snap ring.

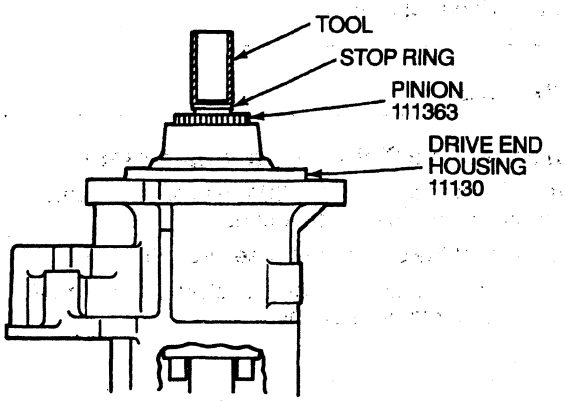

J6206-A

10. Use duck-bill snap ring pliers to expand snap ring and remove from starter drive shaft.
11. Remove stop ring, pinion and spring.
12. Remove lever packing.
13. NOTE: Lever pivot plate is held in the drive end housing with interference tabs which press against the side of the housing. Springs may jump out when pivot plate is pried loose.

    Note position of pivot plate. Cover open end of drive end housing with rags, then pull loose pivot plate with pliers, and catch springs.

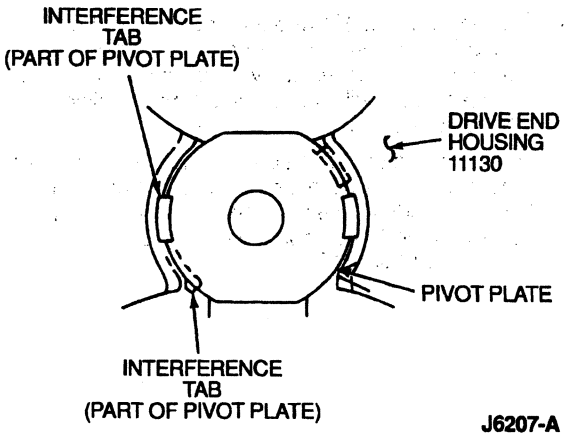

J6207-A

14. NOTE: Do not disassemble the starter drive (11350) from output shaft (11355), but replace as an assembly.

    Remove drive end housing, output shaft, and drive lever and pin (11067) together. Note direction of drive lever and pin and remove drive lever and pin from starter drive.
15. Perform cleaning and inspection procedures. Refer to Section 03-06.

Assembly

1. NOTE: During assembly, lubricate all sliding parts, pivot points, and gear teeth with Multitemp MS No. 2 or equivalent lubricant.

   Apply Multitemp MS No. 2 lubricant or equivalent inside of rear drive end housing bearing before assembly.
2. Position drive lever and pin in collar on starter drive.
3. Install drive end housing with assembled output shaft and starter drive into drive end housing.
4. Install two springs onto drive lever and pin.
5. NOTE: If the interference tabs on the pivot plate prevent reinstalling the plate, file off the tabs or use a new pivot plate.

   Install pivot plate and packing. At this point the packing is the only thing holding the springs in place.
6. Install spring, pinion, and stop ring. Press down the stop ring and, using duck bill snap ring pliers, expand the stop ring retainer and put in place.
7. NOTE: Because the packing is the only thing retaining the drive lever and pin and springs, install the drive end housing before the frame assembly to make sure starter solenoid, springs, pivot plate, and packing are properly positioned.

   Install starter solenoid and same number and thickness of shims as removed, to drive end housing. Tighten to 5-7 N·m (44-62 lb-in).
8. Install steel ball in end of armature shaft.
9. Install starter motor armature, inserting gear end of armature shaft into output shaft. Make sure steel ball does not fall out.
10. Install frame assembly.
11. With ground brushes out of their slots in brush holder, set brush holder onto armature commutator.
12. Using long-nose pliers, pull up brush springs and insert field coil brushes into their respective slots.
13. Using long-nose pliers, pull up brush springs and insert ground brushes into their respective slots.
14. Install the spring washer onto the nose of the starter motor armature.
15. Install the brush end plate and bushing and install the brush end plate-to-brush holder screws. Tighten to 2-3 N·m (18-27 lb-in).
16. Install the through-bolts and tighten to 8-10 N·m (71-89 lb-in).
17. Install wire on solenoid M-terminal. Install nut and tighten to 10-12 N·m (89-106 lb-in).
18. Check pinion gap as outlined in this section and adjust if necessary.

Ford Motor Company Proprietary Publication

DISASSEMBLY AND ASSEMBLY (Continued)

Starter Drive Replacement

Disassembly

1. Disassemble starter motor (11001).

Assembly

1. Replace starter drive and gear assembly as a unit.
2. Assemble starter motor.
3. Check pinion end gap. Refer to Starter Drive Pinion Depth Adjustment in the Adjustments portion of this section.

Brush Replacement

Refer to instructions with replacement starter brush kit to replace starter brushes.

Armature Replacement, Starter Motor

1. Remove positive brush connector from starter solenoid M-terminal.
2. Remove through-bolt and separate motor from starter drive gear assembly and drive end housing.
3. Remove brush end plate screws, brush end plate and bushing (11049) and brush holder (11061) from starter frame and magnet (11075). Remove starter motor armature (11005) from starter frame and magnet.
4. Install new starter motor armature in starter frame and magnet. Apply a thin coating of Syncolube (PTFE) Low Temperature Grease or equivalent meeting Ford specification WSG-M1C218-B2 on both ends of armature shaft and pinion.
5. Install brush holder. Using tool, make sure that brushes fit over commutator. Push black grommet onto frame. Apply grease to bushing bore in brush end plate and bushing and attach to starter frame and magnet.
6. Position starter frame and magnet to starter drive (11350) and drive end housing and install through-bolts. Tighten to 5-10 N·m (44-89 lb-in).
7. Attach positive brush connector to starter solenoid M-terminal. Tighten nut to 10-12 N·m (89-106 lb-in).
8. Check that starter motor no-load current draw is within specification. Refer to Section 03-06.

Bearings

Replace bearings that do not turn smoothly, or bearings that produce abnormal sounds when turned. When a bearing, such as the ball bearing in the brush end plate and bushing (11049), the ball bearing in the drive end housing, or the needle bearing in the stationary gear (11A165), shows an abnormal condition, replace the entire assembly. Bearings are not serviced separately.

ADJUSTMENTS

Starter Drive Pinion Depth Adjustment

After the starter motor (11001) has been assembled, the pinion gap must be checked.

1. Mount the starter motor securely in a vise.
2. Using two switches and a battery, connect the starter motor as shown.

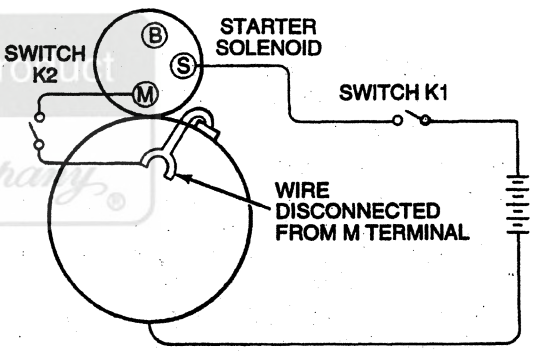

J4747-D

3. When switches K1 and K2 are closed, the starter drive (11350) will be forced outward and the starter motor will turn. By opening switch K2, the starter motor will stop turning with the pinion in the full out position.
4. Gently push the pinion back by hand and measure the amount of pinion movement. The amount corresponds to the pinion gap of conventional starters. End gap should be 0.1-2.0 mm (0.004-0.079 inch).

ADJUSTMENTS (Continued)

5. Adjust the end gap by changing the shims between the solenoid and the drive end housing. Increasing the shims will decrease the gap. Decreasing the shims will increase the gap.

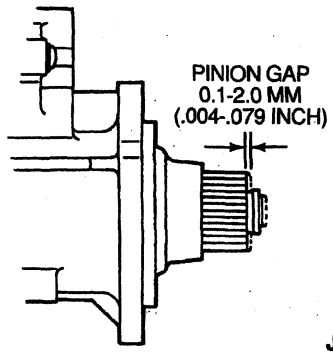

SPECIFICATIONS

STARTER SPECIFICATIONS

Starter Motor								Starter Brushes			
Motor Diameter		Current Draw Under Normal Load	Normal Engine Cranking Speed	Min. Stall Torque @ 2.5 Volts		Max. Load	No Load	Mfg. Length		Spring Tension	
mm	Inches	Amps	rpm	N·m	Lb-Ft	Amps	Amps	mm	Inches	N	Oz
85	3.4	230-630	150-200	37.3	27.5	2400	170 Max.	18	0.71	34	122

NOTE: Maximum commutator runout is 0.12 mm (0.005 inch). Maximum starting circuit voltage drop (battery positive terminal to start terminal) at normal engine temperature is 0.5 volt.

TORQUE SPECIFICATIONS

Description	N·m	Lb-Ft	Lb-In
Starter Solenoid Screws	5-7	—	44-62
Solenoid M-Terminal Nuts	10-12	—	89-106
Solenoid B-Terminal Nuts	9-14	—	80-124
Starter Through-Bolts	8-10	—	71-89
Starter Mounting Bolts	20-27	15-20	—
Brush Holder	2-3	—	18-27
Starter Frame and Magnet Through-Bolts	5-10	—	44-89

LUBRICANT/ADHESIVE/CLEANER SPECIFICATIONS

Description	Part Number	Ford Specification
Syncolube (PTFE) Low Temperature Grease	—	ESF-M1C218-A
Multitemp MS No. 2	—	Equivalent

SECTION 03-07A Ignition, Distributor

SUBJECT	PAGE
VEHICLE APPLICATION	03-07A-1
DESCRIPTION AND OPERATION	
Ignition Coil	03-07A-1
Ignition Control Module	03-07A-2
Ignition System Features	03-07A-1
Universal Distributor	03-07A-2
DIAGNOSIS AND TESTING	
Ignition	03-07A-3
REMOVAL AND INSTALLATION	
Distributor	03-07A-3
Distributor Cap	03-07A-3
Distributor Rotor	03-07A-3
Ignition Coil	03-07A-6
Ignition Control Module	03-07A-7
Ignition Wires	03-07A-7
Spark Plugs	03-07A-9
REMOVAL AND INSTALLATION (Cont'd.)	
Stator	03-07A-4
DISASSEMBLY AND ASSEMBLY	
Distributor	03-07A-10
CLEANING AND INSPECTION	
Distributor	03-07A-10
Distributor Cap	03-07A-10
Distributor Rotor	03-07A-10
Ignition Coil	03-07A-13
Ignition Wires	03-07A-13
Spark Plugs	03-07A-10
ADJUSTMENTS	
Ignition Timing	03-07A-13
Spark Plugs	03-07A-13
SPECIFICATIONS	03-07A-13
SPECIAL SERVICE TOOLS/EQUIPMENT	03-07A-14

VEHICLE APPLICATION

F-Series with Gasoline Engines

Official Licensed Product
Ford Motor Company

DESCRIPTION AND OPERATION

Ignition System Features

The distributor ignition (DI) system features a camshaft-driven distributor (12127) without centrifugal or vacuum advance. The distributor has a die-cast base with a Hall effect stator assembly.

Initial timing adjustments are only required when the distributor has been moved from its factory setting or removed from the engine (6007). Ignition timing procedures and diagnostics are found in the 1996 Powertrain Control / Emissions Diagnosis Manual.[1]

NOTE: When replacing any component, use only the proper service replacement part. Do not change the octane rods without proper authorization; state or federal emission requirements will be affected.

Ignition Coil

The ignition coil (12029) transforms battery voltage on the ignition coil primary circuit into as much as 40KV on the secondary circuit each time the ignition coil receives a signal from the ignition control module (ICM)(12A297).

1 Can be purchased as a separate item.

DESCRIPTION AND OPERATION (Continued)

Ignition Control Module

The ignition control module (ICM)(12A297) receives spark signals from the powertrain control module (PCM)(12A650) and serves as an electric switch for the coil primary circuit. Based on input signals, the powertrain control module will signal the ignition control module to make corrections to the basic ignition timing. The computed ignition timing is determined by the engine speed, intake manifold vacuum (calculated by the intake air amount and engine speed) and EGR flow rate.

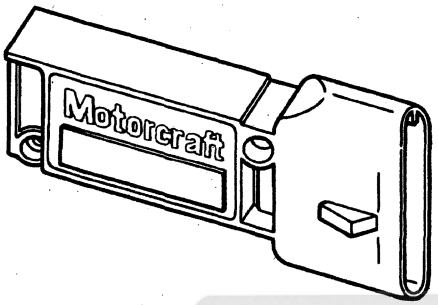

B5729-A

Universal Distributor

The universal distributor (12127) has a Hall effect vane switch assembly to allow the ignition coil (12029) to be switched on and off by the powertrain control module (PCM)(12A650) and ignition control module (ICM)(12A297). The vane switch is an encapsulated package consisting of a Hall effect device on one side and a permanent magnet on the other side.

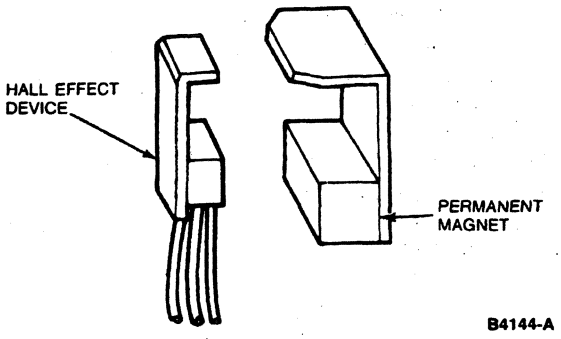

B4144-A

The distributor armature (12A099) is made of ferrous metal and is used to trigger the signal off and on.

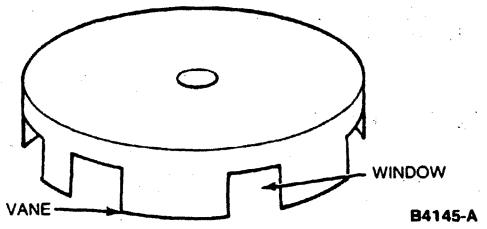

B4145-A

When the window of the distributor armature is between the magnet and the Hall effect device, a magnetic flux field is completed from the magnet through the Hall effect device and back to the magnet.

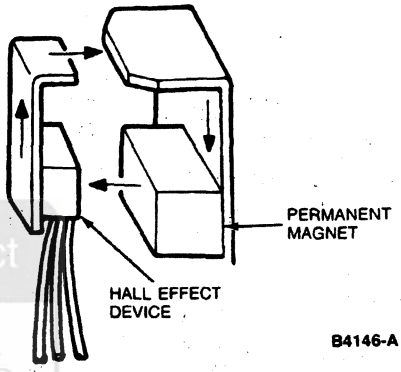

B4146-A

As the vane passes through this opening, the flux lines are shunted through the vane and back to the magnet.

During this time, a voltage is produced as the vane passes through the opening. When the vane clears the opening, the window edge causes the signal to go to zero volts. This signal is used by the powertrain control module for crankshaft position sensing and the computation of the desired spark advance based on engine demand and calibration. The conditioned spark advance and voltage distribution is done with a conventional distributor rotor (12200), distributor cap (12106) and spark plug wire set (12259).

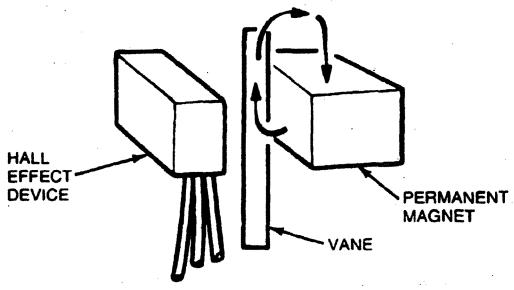

B4147-A

Official Licensed Product
Ford Motor Company

DIAGNOSIS AND TESTING

Ignition

Refer to the 1996 Powertrain Control / Emissions Diagnosis Manual.[2]

REMOVAL AND INSTALLATION

Distributor Cap

Removal

1. Disengage spring clips.
2. Lift distributor cap (12106) with attached wire set straight off distributor (12127) to prevent damage to the rotor blade and spring. To remove base adapter, loosen retaining screws.

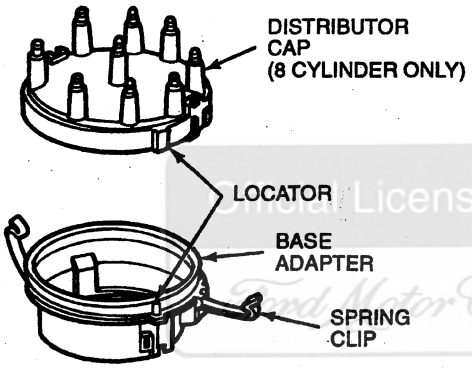

B6128-A

Installation

1. Inspect distributor cap. Refer to Distributor Cap in the Cleaning and Inspection portion of this section.
2. Replace the distributor cap if damage is found.
3. Reinstall any ignition wires removed in their proper locations.
4. If removed, position base adapter and tighten retaining screws to 2.8-4.0 N·m (25-35 lb-in).
5. Position spring clips and press inward on center of clips until they snap into place on distributor cap.

Distributor Rotor

Removal

1. Remove distributor cap (12106) with wires attached.
2. Remove distributor rotor (12200) from the distributor shaft by pulling upward on the distributor rotor .

Installation

1. Inspect distributor rotor. Refer to Distributor Rotor in the Cleaning and Inspection portion of this section.
2. Align locating boss and fully seat distributor rotor on distributor shaft.

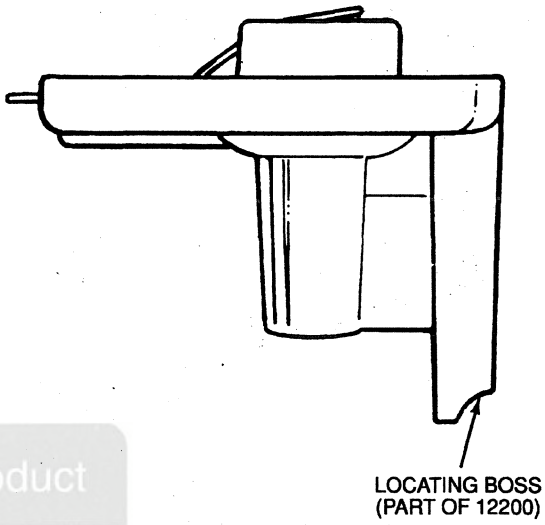

B5726-B

3. Install distributor cap.

Distributor

Removal

1. Align timing pointer with top dead center (TDC) on crankshaft vibration damper.
2. Mark position of No. 1 cylinder wire tower on distributor base. Mark will provide an alignment reference when reinstalling the distributor (12127).
3. Disengage distributor cap hold-down clips.
4. Lift distributor cap (12106) with attached wire set straight off distributor to prevent damage to rotor blade and spring. Remove retaining screws and base adapter.
5. Position distributor cap and attached wire set aside so as not to interfere with distributor removal.
6. Check if distributor rotor blade is pointing toward the marked position on the distributor base adapter (12A217). If distributor rotor blade is pointing one-half a revolution off, rotate crankshaft one full revolution and realign timing pointer with TDC on crankshaft vibration damper.
7. Disconnect wiring harness at distributor.
8. Remove distributor rotor (12200) from distributor shaft by pulling upward on distributor rotor.

Official Licensed Product Ford Motor Company

2 Can be purchased as a separate item.

REMOVAL AND INSTALLATION (Continued)

9. Remove distributor hold-down bolt and hold-down clamp (12270).
10. Remove distributor from cylinder block by pulling upward with a slight side-to-side twist.
11. Cover distributor opening in cylinder block with a clean shop towel to prevent the entry of foreign material into engine.
12. Inspect distributor. Refer to Distributor in the Cleaning and Inspection portion of this section.

Distributor Removal/Installation — 5.8L Engine

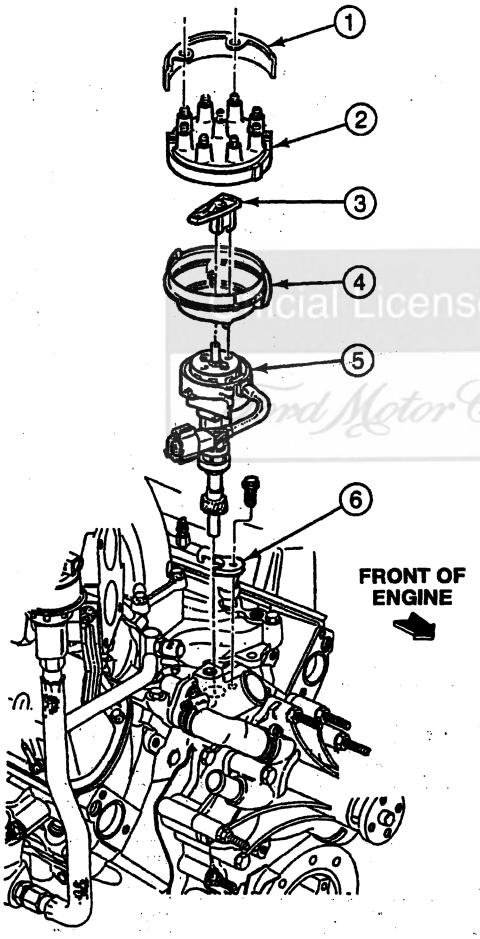

DB0017-A

Item	Part Number	Description
1	9471	Intake Manifold Shield
2	12106	Distributor Cap
3	12200	Distributor Rotor
4	12A217	Distributor Base Adapter
5	12127	Distributor
6	12270	Hold-Down Clamp

(Continued)

Installation

1. Lubricate distributor gear teeth with a coating of Engine Assembly Lubricant D9AZ-19579-D or equivalent fresh motor oil meeting Ford specification ESR-M99C80-A.
2. Align locating boss and fully seat distributor rotor on distributor shaft.
3. Rotate distributor shaft so that distributor rotor blade is pointing toward marked position on distributor base adapter.
4. NOTE: When installing distributor, No. 1 piston must be at TDC of the compression stroke.

   Install distributor into cylinder block with a slight side-to-side twist.
5. NOTE: If the vane and vane switch assembly can not be kept on the leading edge after installation, remove the distributor from cylinder block by pulling upward enough for the distributor gear to disengage from the camshaft gear. Rotate distributor rotor enough so the gear will align on the next tooth of the camshaft gear.

   Rotate distributor in engine to align leading edge of armature vane to vane switch assembly. Verify that distributor rotor blade is pointing toward marked position on distributor base adapter.
6. Install distributor hold-down clamp and bolt.
7. Position distributor base adapter and install attaching screws.
8. Position distributor cap with attached wire set straight on distributor to prevent damage to rotor blade and spring.
9. Secure distributor cap using spring clips.
10. Connect wiring harness.
11. Set initial timing according to procedures in 1996 Powertrain Control/Emissions Diagnosis Manual.[3]
12. Without moving timing adjustment, tighten distributor hold-down bolt to 23-34 N·m (17-25 lb-ft).

Stator

SPECIAL SERVICE TOOL(S) REQUIRED

Description	Tool Number
Axle Bearing/Seal Plate	T75L-1165-B

3 Can be purchased as a separate item.

REMOVAL AND INSTALLATION (Continued)

CAUTION. Do not attempt to replace stator without an arbor press.

CAUTION. The distributor drive gear is not released for service If any nicks or cracks occur during the disassembly or assembly procedures, a new distributor (12127) must be installed The distributor drive gear is matched to the distributor at assembly and should never be replaced Although some of the drive gears for other distributors may physically fit the distributor, they must not be used Whenever damage or excessive wear is noted on the drive gear, a new distributor must be installed

Removal

1 Remove distributor assembly

2 Loosen the armature retaining screws While loosening screws, use a 5/16-inch Allen wrench to hold distributor shaft stationary Do not hold the distributor armature

3 Remove two attaching screws and armature

4 Mark collar, drive gear and shaft assembly with a felt tip pen for alignment reference when reinstalling distributor gear

5 Remove and discard roll pin from drive gear

6 Remove and discard roll pin from collar

7 Invert distributor and place in Axle Bearing/Seal Plate T75L-1165-B Press off the gear using Bearing Pulling Attachment D79L-4621-A or equivalent

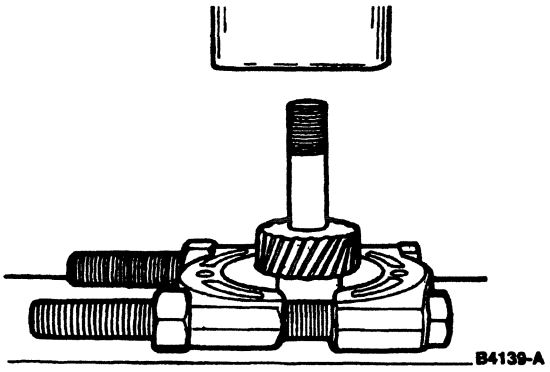
B4139-A

8 Remove collar

9 Deburr and polish shaft with emery cloth Housing should slide freely on shaft

10 Remove shaft assembly

11 Remove retaining screw and stator

12 Remove retaining screw and octane rod

13 Inspect distributor housing bushing for wear or signs of excess heat concentration Replace complete distributor if damaged

14 Inspect distributor housing for cracks and wear Replace complete distributor if damaged

15 Inspect distributor housing O-ring for cuts or damage and replace O-ring if necessary

Closed Bowl Distributor

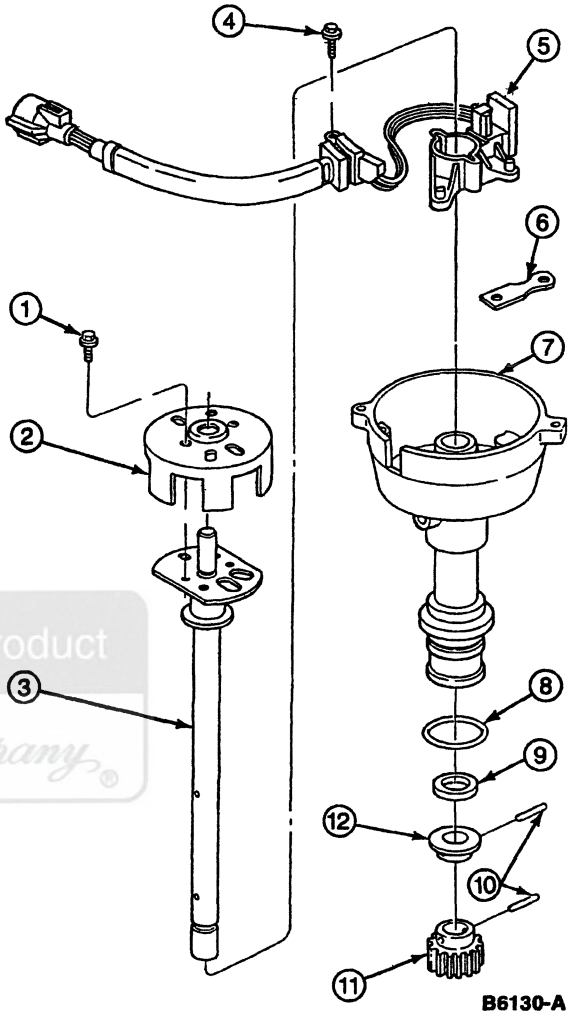

B6130-A

Item	Part Number	Description
1	388483-S2	Screw (2 Req'd)
2	—	Armature (Rotary Vane) (Part of 12127)
3	—	Shaft Assy (Part of 12127)
4	N801293-S36	Screw
5	—	Stator (Hall Effect Vane Switch Assy) (Part of 12127)
6	—	Octane Rod (Part of 12127)
7	—	Base Assy (Part of 12127)
8	—	O-Ring (Part of 12127)
9	—	Thrust Washer (Part of 12127)
10	—	Roll Pin (Part of 12127)

(Continued)

REMOVAL AND INSTALLATION (Continued)

Item	Part Number	Description
11	—	Distributor Gear (Part of 12127)
12	—	Collar (5.8L and 7.5L) (Part of 12127)

Installation

1. Position stator and press downward to seat in distributor base.
2. Position wiring grommet in distributor base notch so that eyelets align with screw holes.
3. Position distributor stator connector wires away from any moving parts.
4. Install distributor stator assembly retaining screw and retainer. Tighten screw to 1.7-4.0 N·m (15-35 lb-in).
5. Install octane rod, octane rod screw, and retainer. Tighten screw to 1.7-4.0 N·m (15-35 lb-in).
6. Lubricate shaft assembly with a light coating of Engine Assembly Lubricant D9AZ-19579-D or equivalent fresh motor oil meeting Ford specification ESR-M99C80-A.
7. Install shaft assembly into distributor base adapter (12A217).
8. Place a 1/2-inch deep well socket over end of shaft assembly.
9. Invert distributor on an arbor press.
10. Install collar and roll pin.
11. **CAUTION: The distributor drive gear is not released for service. If any nicks or cracks occur during the disassembly or reassembly procedures, a new distributor must be installed. The distributor drive gear is matched to the distributor at assembly and should never be replaced.**

    NOTE: The hole in the drive gear and shaft assembly must be aligned as accurately as possible to allow for ease of the roll pin insertion. If the hole in the drive gear and shaft assembly will not align, the gear must be removed and installation attempted again. The gear cannot be turned for alignment.

    Position distributor gear on shaft assembly and align distributor gear with felt tip reference mark made at disassembly.
12. Place a 5/8-inch deep well socket centered around gear hole and press distributor gear onto shaft assembly.
13. Install new roll pin through distributor gear. Pin should be flush (5.8L). Pin exposure should be equal on either side of gear (7.5L).
14. Install distributor armature.
15. NOTE: While tightening screws, use a 5/16-inch Allen wrench to hold distributor shaft stationary. Do not hold distributor armature.

    Install armature attaching screws and tighten to 2.8-4.0 N·m (25-35 lb-in).
16. NOTE: If the distributor armature contacts the stator, the entire distributor must be replaced.

    Rotate distributor shaft. Shaft should rotate freely, without any binding.
17. Install distributor assembly and reset initial timing.

Ignition Coil

Removal

1. Disconnect wiring harness at ignition coil (12029).
2. **CAUTION: Do not pull directly on high tension wire. It can separate from connector in boot. Grasp boot by hand and remove with a twisting motion.**

   Disconnect high tension wire at ignition coil.
3. Remove ignition coil to bracket retaining screws and remove ignition coil.

Installation

1. Follow removal procedure in reverse order.
2. Tighten ignition coil-to-bracket retaining screws to 2.8-4.0 N·m (25-35 lb-in).

Ford Motor Company

REMOVAL AND INSTALLATION (Continued)

Ignition Coil Location — 5.8L Engine

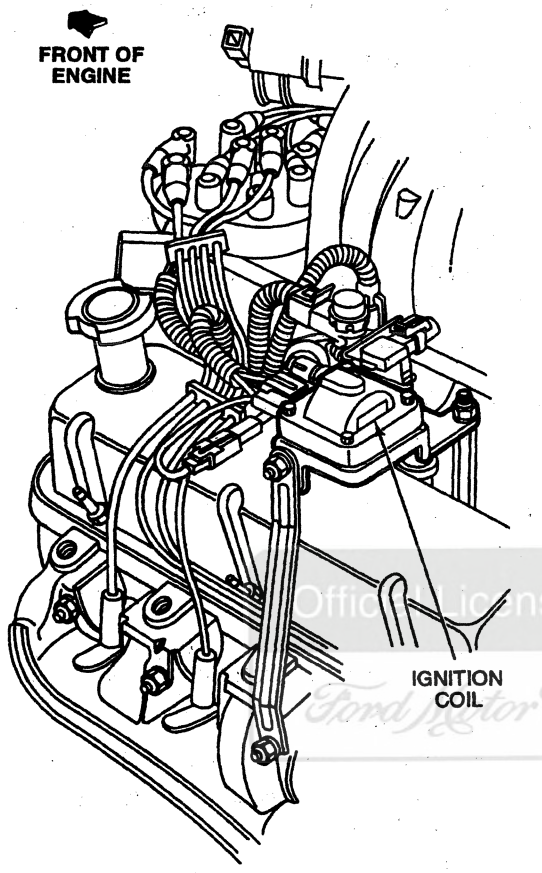

Ignition Control Module

Removal

1. Remove two screws retaining ignition control module (ICM)(12A297) heat sink assembly to left fender apron.
2. Disconnect harness connector from ignition control module.
3. Remove two screws retaining ignition control module to heat sink and remove ignition control module.

Installation

1. Coat ignition control module baseplate with silicone compound, approximately 0.0179 mm (1/32 inch) thick. Use Silicone Brake Caliper Grease and Dielectric Compound D7AZ-19A331-A (Motorcraft WA-10) or equivalent meeting Ford specification ESE-M1C171-A.
2. Position ignition control module onto heat sink, and tighten two retaining screws to 1.2-1.8 N·m (11-16 lb-in).
3. Install ignition control module heat sink assembly on left fender apron using two retaining screws, and tighten to 9-14 N·m (80-124 lb-in).
4. Connect wiring to ignition control module.

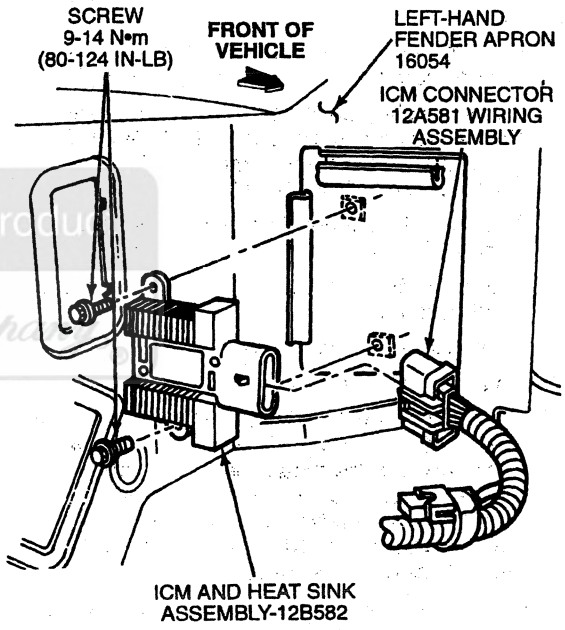

Ignition Wires

SPECIAL SERVICE TOOL(S) REQUIRED

Description	Tool Number
Spark Plug Wire Remover	T74P-6666-A

Official Licensed Product Ford Motor Company

REMOVAL AND INSTALLATION (Continued)

Removal

1. When removing distributor to spark plug wire (12286) from spark plugs (12405), use Spark Plug Wire Remover T74P-6666-A. Grasp and rotate boot from side to side back and forth on plug insulator to free boot. Use special tool to pull boot from plug. Do not pull directly on distributor to spark plug wire; the wire can become separated from connector inside boot.

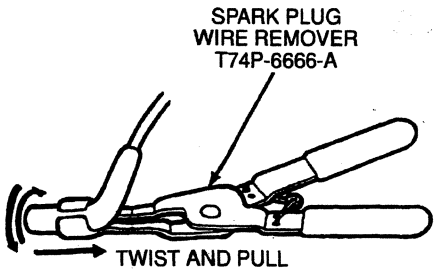

B5762-A

2. **CAUTION: Do not pull on wire.**

   When removing ignition coil to distributor high tension wiring (12298) or distributor to spark plug wire from distributor cap (12106) or ignition coil (12029), grasp boot by hand and remove with twisting motion.

Installation

1. NOTE: Whenever any ignition wiring equipped with a boot is removed or installed, Silicone Brake Caliper Grease and Dielectric Compound D7AZ-19A331-A (Motorcraft WA-10) or equivalent meeting Ford specification ESE-M1C171-A must be applied to boot before it is reconnected.

   Using a small clean tool, coat entire interior surface of boot with Silicone Brake Caliper Grease and Dielectric Compound D7AZ-19A331-A (Motorcraft WA-10) or equivalent meeting Ford specification ESE-M1C171-A.

2. Insert each distributor to spark plug wire and ignition coil to distributor high tension wiring on proper terminal of distributor cap. Make sure distributor to spark plug wires and ignition coil to distributor high tension wiring are properly installed on their terminals. The No. 1 terminal is identified on distributor cap. Install distributor to spark plug wires and ignition coil to distributor high tension wiring starting with No. 1 terminal. For proper routing and retention of ignition wires, refer to following illustration. Callouts indicate cylinder number.
3. Remove ignition wire separators (12297) from old spark plug wire set (12259) and install them on new set in same relative position. Install distributor to spark plug wires and ignition coil to distributor high tension wiring in ignition wire separators on valve cover (6582).
4. Connect distributor to spark plug wires to proper spark plugs.
5. Install ignition coil to distributor high tension wiring to the distributor cap.

Ford Licensed Product
Helm, Incorporated

REMOVAL AND INSTALLATION (Continued)

Ignition Wire Routing and Retention — 5.8L Engine

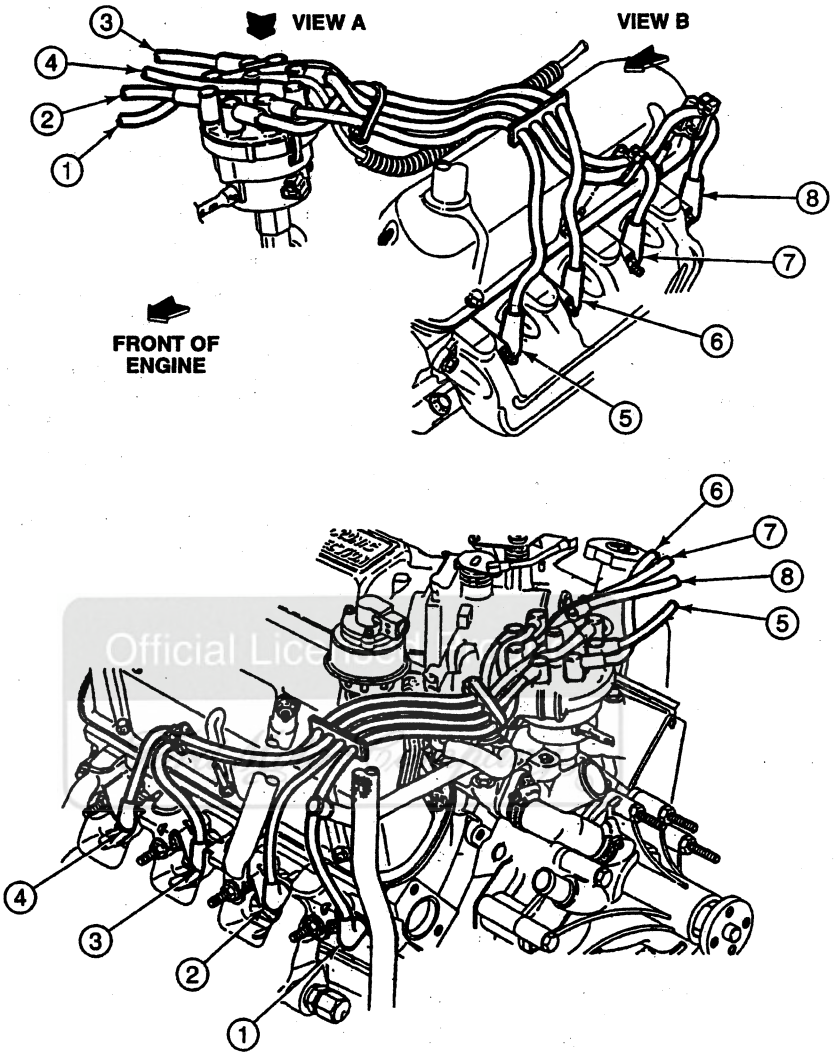

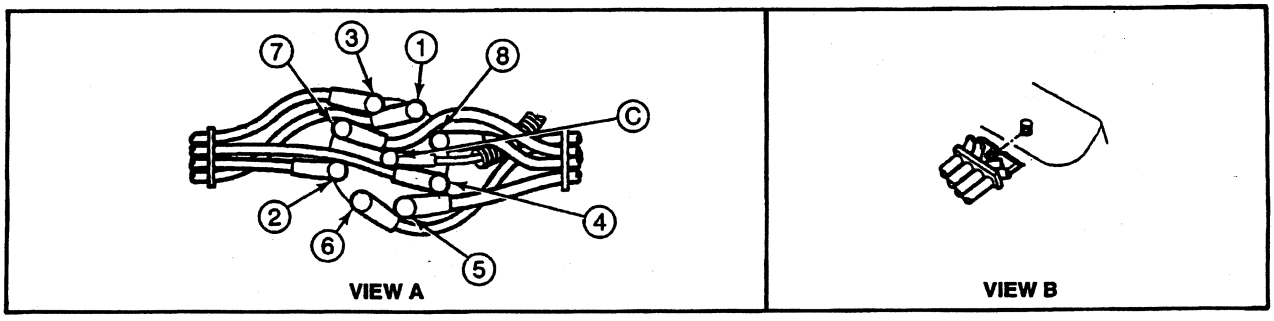

DB0018-A

Spark Plugs

SPECIAL SERVICE TOOL(S) REQUIRED

Description	Tool Number
Spark Plug Wire Remover	T74P-6666-A

Removal

1. Remove air cleaner inlet tube assembly.
2. Remove distributor to spark plug wire (12286) from spark plug (12405) using Spark Plug Wire Remover T74P-6666-A.

REMOVAL AND INSTALLATION (Continued)

3. Remove any dirt or foreign material from spark plug areas of cylinder head with compressed air. Remove spark plugs using appropriate socket, extension and socket wrench.

Installation

1. Refer to the Spark Plug Inspection Chart in the Cleaning and Inspection portion of this section to determine spark plug condition. Replace spark plugs as required.
2. Check and set the spark plug gap to specification using an appropriate gapping tool. Refer to the Vehicle Emission Control Information (VECI) decal located in the engine compartment.
3. Install spark plugs. Tighten to 9-20 N·m (7-15 lb-ft).
4. Coat entire interior surface of ignition wire boot with Silicone Brake Caliper Grease and Dielectric Compound D7AZ-19A331-A (Motorcraft WA-10) or equivalent meeting Ford specification ESE-M1C171-A. Install onto proper spark plug. Make sure spark plug wire boot is completely seated.
5. Install air cleaner outlet tube.
6. Start engine (6007) and check for proper operation.

DISASSEMBLY AND ASSEMBLY

Distributor

Refer to Stator in the Removal and Installation portion of this section.

CLEANING AND INSPECTION

Distributor Cap

1. Wash both inside and outside surfaces of the distributor cap (12106) with soap and water.
2. Dry distributor cap with compressed air.
3. Inspect distributor cap for cracks, broken carbon button or carbon tracks.
4. inspect distributor cap terminals for dirt and corrosion.
5. Replace the distributor cap if it is damaged.

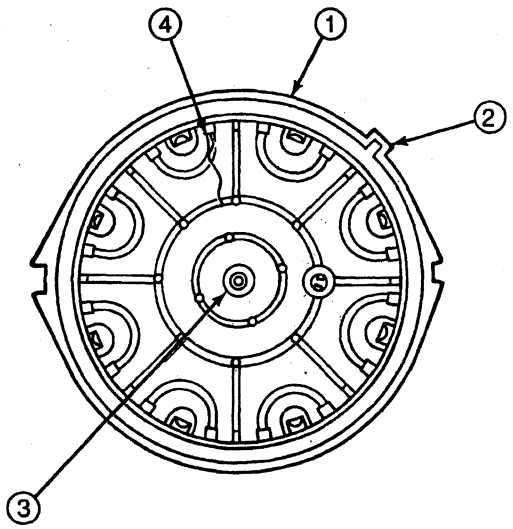

B6129-A

Item	Part Number	Description
1	12106	Distributor Cap
2	—	Alignment Locator (Part of 12106)
3	—	Carbon Button (Part of 12106)
4	—	Crack or Carbon Track

Distributor

1. Inspect distributor O-ring. It should fit tightly and be free of cuts. Drive gear should be free of nicks, cracks and excessive wear.
2. Rotate distributor driveshaft. It should move freely without binding.

Distributor Rotor

1. Wash distributor rotor (12200) with soap and water.
2. Dry with compressed air.
3. Inspect and replace distributor rotor if cracks, carbon tracks, burns or damage to blade or spring are observed.
4. Replace distributor rotor, if damage is found.

Spark Plugs

1. Clean spark plugs (12405) as necessary using a wire brush or professional spark plug cleaner (follow manufacturer's instructions).

Official Licensed Product Ford Motor Company

CLEANING AND INSPECTION (Continued)

2. Inspect the firing tip. Replace spark plug if firing tip is worn or damaged. Refer to following Spark Plug Inspection Chart.

Official Licensed Product
Ford Motor Company

CLEANING AND INSPECTION (Continued)

Spark Plug Inspection Chart

GAP BRIDGED

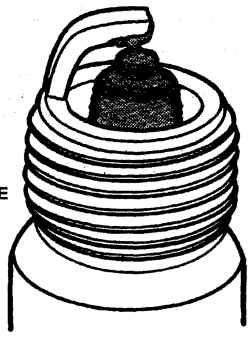

IDENTIFIED BY DEPOSIT BUILD—UP CLOSING GAP BETWEEN ELECTRODES.

CAUSED BY OIL OR CARBON FOULING, REPLACE PLUG, OR, IF DEPOSITS ARE NOT EXCESSIVE THE PLUG CAN BE CLEANED.

OIL FOULED

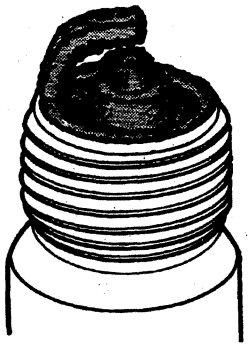

IDENTIFIED BY WET BLACK DEPOSITS ON THE INSULATOR SHELL BORE ELECTRODES.

CAUSED BY EXCESSIVE OIL ENTERING COMBUSTION CHAMBER THROUGH WORN RINGS AND PISTONS, EXCESSIVE CLEARANCE BETWEEN VALVE GUIDES AND STEMS, OR WORN OR LOOSE BEARINGS. CORRECT OIL PROBLEM. REPLACE THE PLUG.

CARBON FOULED

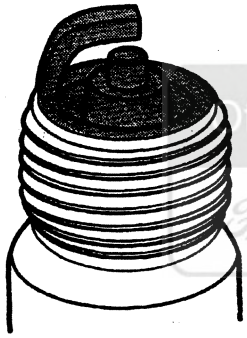

IDENTIFIED BY BLACK, DRY FLUFFY CARBON DEPOSITS ON INSULATOR TIPS, EXPOSED SHELL SURFACES AND ELECTRODES.

CAUSED BY TOO COLD A PLUG, WEAK IGNITION, DIRTY AIR CLEANER, DEFECTIVE FUEL PUMP, TOO RICH A FUEL MIXTURE, IMPROPERLY OPERATING HEAT RISER OR EXCESSIVE IDLING. CAN BE CLEANED.

NORMAL

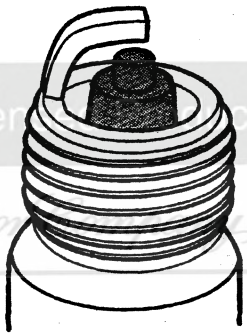

IDENTIFIED BY LIGHT TAN OR GRAY DEPOSITS ON THE FIRING TIP.

PRE-IGNITION

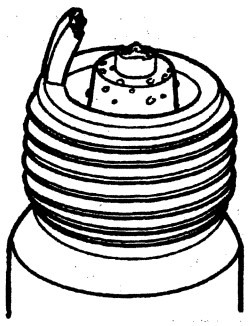

IDENTIFIED BY MELTED ELECTRODES AND POSSIBLY BLISTERED INSULATOR. METALIC DEPOSITS ON INSULATOR INDICATE ENGINE DAMAGE.

CAUSED BY WRONG TYPE OF FUEL, INCORRECT IGNITION TIMING OR ADVANCE, TOO HOT A PLUG, BURNT VALVES OR ENGINE OVERHEATING. REPLACE THE PLUG.

OVERHEATING

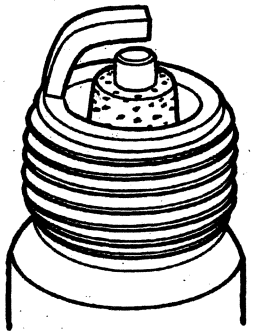

IDENTIFIED BY A WHITE OR LIGHT GRAY INSULATOR WITH SMALL BLACK OR GRAY BROWN SPOTS AND WITH BLUISH-BURNT APPEARANCE OF ELECTRODES.

CAUSED BY ENGINE OVER-HEATING, WRONG TYPE OF FUEL, LOOSE SPARK PLUGS, TOO HOT A PLUG, LOW FUEL PUMP PRESSURE OR INCORRECT IGNITION TIMING. REPLACE THE PLUG.

FUSED SPOT DEPOSIT

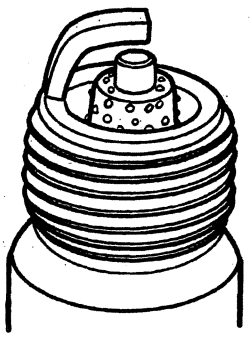

IDENTIFIED BY MELTED OR SPOTTY DEPOSITS RESEMBLING BUBBLES OR BLISTERS.

CAUSED BY SUDDEN ACCELERATION. CAN BE CLEANED IF NOT EXCESSIVE, OTHERWISE REPLACE PLUG.

B4054-E

Official Licensed Product Ford Motor Company

CLEANING AND INSPECTION (Continued)

Ignition Coil

1 Wipe coil tower with a clean cloth dampened with soap and water
2 Remove any soap film and dry with compressed air
3 Inspect for cracks, carbon tracking and dirt

Ignition Wires

1 Without removing the distributor to spark plug wire (12286) from the spark plugs (12405), distributor cap (12106) or ignition coil (12029), wipe the ignition coil to distributor high tension wiring (12298) or distributor to spark plug wire with a clean, damp cloth and inspect for visible damage such as cuts, pinches, cracks or torn boots
2 Replace only ignition coil to distributor high tension wiring or distributor to spark plug wires that are damaged Refer to Ignition Wires in the Removal and Installation portion of this section

ADJUSTMENTS

Spark Plugs

Using a suitable spark plug gap tool, adjust spark plug gap Refer to Ignition System Specifications chart in the Specifications portion of this section

Ignition Timing

Refer to the 1996 Powertrain Control / Emissions Diagnosis Manual[4] for ignition timing procedures of the distributor ignition (DI) system Base ignition timing is preset at 10° ± 2° BTDC

Official Licensed Product Ford Motor Company

SPECIFICATIONS

IGNITION SYSTEM SPECIFICATIONS

Engine	Spark Plug Type	Spark Plug Gap	Firing Order	Timing
5 8L	ASF 32P	1 07-1 17 mm (0 042-0 046 Inch)	13726548	BTDC 10° ± 2°
7 5L	ASF 42P	1 07-1 17 mm (0 042-0 046 Inch)	15426378	BTDC 10° ± 2°

LUBRICANT/ADHESIVE/CLEANER SPECIFICATIONS

Description	Part Number	Ford Specification
Engine Assembly Lubricant	D9AZ-19579 D	ESR-M99C80-A
Silicone Brake Caliper Grease and Dielectric Compound	D7AZ-19A331-A (WA-10)	ESE M1C171-A

TORQUE SPECIFICATIONS

Description	N m	Lb-Ft	Lb-In
Distributor Hold-Down Bolt	23-34	17-25	—
Stator Assembly Screws	1 7-4 0	—	15-35
Spark Plugs	9-20	7 15	—
ICM-to-Heat Sink Screws	1 2 1 8	—	11-16
ICM/Heat Sink Assembly-to-Left Fender Apron Screws	9-14	—	80-124
Octane Rod Retaining Screw	1 7-4 0	—	15 35

(Continued)

4 Can be purchased as a separate item

SPECIFICATIONS (Continued)

TORQUE SPECIFICATIONS (Cont'd)

Description	N·m	Lb-Ft	Lb-In
Distributor Adapter Base to Distributor Base	2.8-4.0	—	25-35
Armature Retaining Screws	2.8-4.0	—	25-35
Coil to Bracket Retaining Screws	2.8-4.0	—	25-35

SPECIAL SERVICE TOOLS/EQUIPMENT

SPECIAL SERVICE TOOLS REQUIRED

Tool Number/ Description	Illustration
T74P-6666-A Spark Plug Wire Remover	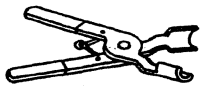 T74P-6666-A
T75L-1165-B Axle Bearing/Seal Plate	 T75L-1165-B

SPECIAL SERVICE TOOLS DESIRED

Tool Number	Description
D79L-4621-A	Bearing Pulling Attachment

Official Licensed Product
Ford Motor Company

SECTION 03-07B Glow Plug System

SUBJECT	PAGE
VEHICLE APPLICATION	03-07B-1
DESCRIPTION AND OPERATION	
Glow Plug Relay	03-07B-2
Glow Plug System	03-07B-1
Glow Plugs	03-07B-1
DIAGNOSIS AND TESTING	
Glow Plug System	03-07B-2
REMOVAL AND INSTALLATION	
Glow Plug	03-07B-2
Glow Plug Relay	03-07B-3
SPECIFICATIONS	03-07B-3

VEHICLE APPLICATION

F-250 Heavy Duty, F-350 and F-Super Duty Equipped with 7.3L Diesel Engines

DESCRIPTION AND OPERATION

Glow Plug System

The 7.3L diesel engine uses two different glow plug systems that preheat air in the combustion chamber to improve cold engine starting.

Both systems consist of eight glow plugs, the glow plug relay, powertrain control module (PCM)(12A650), engine oil temperature (EOT) sensor and barometric pressure sensor (BARO sensor)(12A644).

The 49-state glow plug system is electronically controlled by the powertrain control module. The powertrain control module energizes the glow plugs immediately after the key is placed in the ON position and then determines how long the glow plugs will be on according to the engine oil temperature and the barometric pressure. The required time for the glow plugs to be energized decreases as the engine oil temperature and barometric pressure increase.

The glow plugs are self-regulating, and the powertrain control module controls relay ON time.

The powertrain control module protects the glow plugs by energizing them for short durations if the battery voltage is abnormally high.

The California system also incorporates a shunt and extra wiring for the on-board diagnostic II system (OBD II).

The California glow plug system functions the same way as the 49-state system except as follows:

- A shunt is added to the glow plug relay to register voltage to both the left bank and the right bank glow plugs.
- Three sensor wires are added to the relay to sense failures in the system.

Glow Plugs

The glow plugs warm up the cylinders to improve cold engine starting.

The glow plugs are located in the cylinder heads under the valve covers.

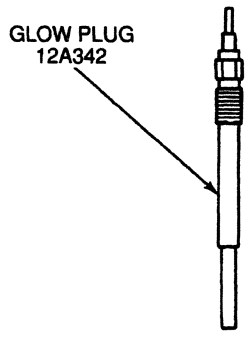

B5755-A

DESCRIPTION AND OPERATION (Continued)

Glow Plug Relay

The glow plug relay has a plastic base and two mounting bolts. It is operated by the powertrain control module (PCM)(12A650), which senses engine oil temperature, PCM voltage and barometric pressure.

When the engine oil temperature or the barometric pressure is low, the PCM activates the glow plug relay (12A343) and the glow plugs.

If the PCM voltage is too high, the powertrain control module deactivates the glow plug relay and the glow plugs immediately energize for a shorter duration, decreasing the modulation of the duty cycle.

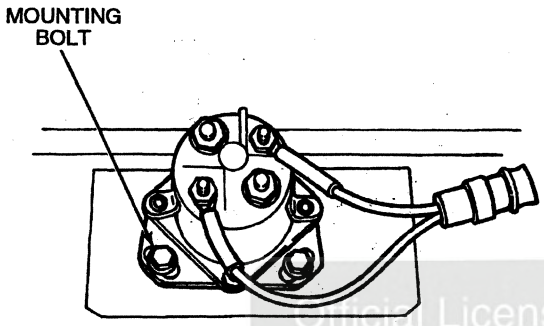

DB0032-A

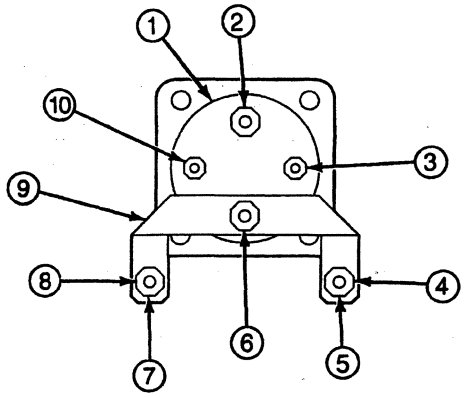

DB0034-A

Item	Part Number	Description
1	1825931	Glow Plug Relay
2	—	Battery Feed Post (12-Volt) (Part of 1825931)
3	—	Glow Plug Control Post from PCM (Part of 1825931)
4	—	Left Bank Glow Plug Feed Post (Part of 1825931)
5	—	Left Bank Sensor Feed to PCM (Part of 1825931)
6	—	Center Post Sensor (Part of 1825931)
7	—	Right Bank Sensor Feed to PCM (Part of 1825931)
8	—	Right Bank Glow Plug Feed Post (Part of 1825931)
9	1825932	Shunt (F-Series California Only)
10	—	Key Power Feed Post (Part of 1825931)

DIAGNOSIS AND TESTING

Glow Plug System

Refer to the 1996 Powertrain Control/Emissions Diagnosis Manual[1] for non-California systems.

Refer to the Powertrain Control/Emissions Diagnosis Manual[1] for California systems only.

REMOVAL AND INSTALLATION

Glow Plug

Removal

1. **WARNING: THE RED-STRIPED WIRING HARNESS CARRIES 115V DC. SEVERE ELECTRICAL SHOCK CAN BE RECEIVED. DO NOT PIERCE.**

   Remove valve cover (6582). Refer to Section 03-01C.
2. Disconnect glow plug electrical connector using a pair of pliers.
3. Remove glow plug using 10-mm socket.
4. Clean and inspect glow plug tip for damage. Replace if damaged.

Installation

1. Install glow plug and tighten to 19 N·m (14 lb-ft).
2. Connect glow plug electrical connector. Make sure glow plug wiring is routed to avoid moving parts.

1 Can be purchased as a separate item.

REMOVAL AND INSTALLATION (Continued)

3. Install valve cover. Refer to Section 03-01C.

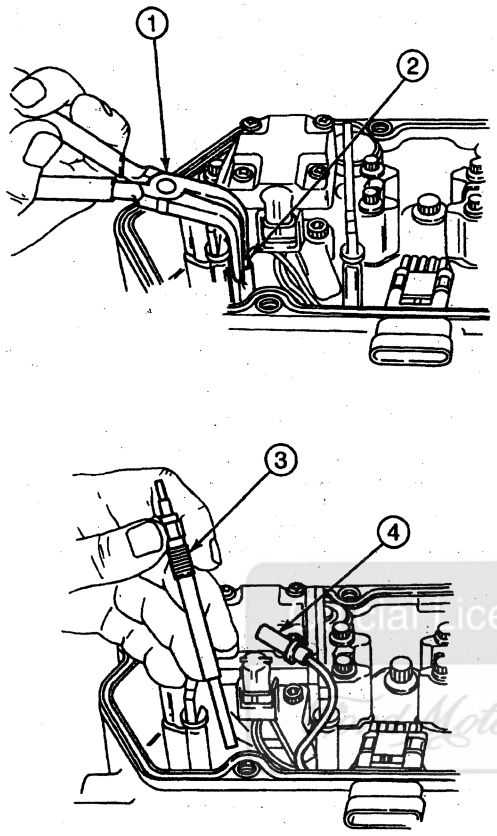

B5757-B

Item	Part Number	Description
1	—	Needlenose Pliers
2	—	Glow Plug Lead (Part of 9A451)
3	12A342	Glow Plug
4	9A451	Glow Plug Wiring

Glow Plug Relay

Removal

1. **CAUTION: Do not use a screwdriver or similar tool to pry off the terminal cover. Battery voltage is present at the terminals.**
   Disconnect ground cables at batteries.
2. Remove glow plug relay plastic terminal cover.
3. Disconnect battery terminal connector (12-V power wire), glow plug relay connector and harness connector.
4. Remove mounting screws and lift glow plug relay (12A343) from engine (6007). Inspect the plastic base and relay housing for cracks. Replace, if damaged.

Installation

1. Follow removal procedure in reverse order.

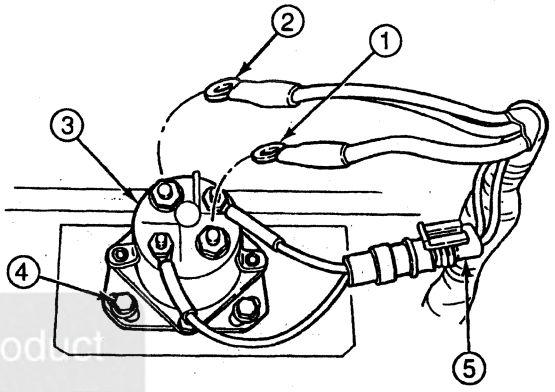

DB0033-A

Item	Part Number	Description
1	—	Glow Plug Relay Connector (Part of 9A451)
2	—	Battery Terminal Connector (Part of 9A451)
3	1825931	Glow Plug Relay
4	—	Glow Plug Relay Mounting Bolts (Part of 1825931)
5	—	Relay Control Harness (Part of 9A451)

SPECIFICATIONS

TORQUE SPECIFICATIONS

Description	N·m	Lb-Ft
Glow Plug	19	14

SECTION 03-08 Engine Emission Control

SUBJECT	PAGE
VEHICLE APPLICATION	03-08-1
DESCRIPTION AND OPERATION	
Exhaust Emission Control System	03-08-2
Vehicle Emission Control Information Decal	03-08-2
Exhaust Gas Recirculation (EGR) System	03-08-2
Positive Crankcase Ventilation (PCV) System	03-08-1
Secondary Air Injection Bypass (AIRB) Valve	03-08-3
Secondary Air Injection Diverter (AIRD) Valve	03-08-3
DIAGNOSIS AND TESTING	
Engine Emission Control	03-08-4
IN-VEHICLE SERVICE	
EGR Control Solenoid	03-08-5
EGR Valve	03-08-4
EGR Valve Position Sensor	03-08-5

SUBJECT	PAGE
IN-VEHICLE SERVICE (Cont'd.)	
EGR Valve to Exhaust Manifold Tube	03-08-4
PCV Hoses	03-08-4
Crankcase Ventilation Connector and Hose	03-08-4
Oil Separator Hose	03-08-4
PCV Valve	03-08-4
REMOVAL AND INSTALLATION	
Secondary Air Injection Bypass (AIRB) Valve	03-08-5
Secondary Air Injection Diverter (AIRD) Valve, 5.8L Typical	03-08-5
CLEANING AND INSPECTION	
EGR Control Solenoid	03-08-6
EGR Valve	03-08-6
PCV Valve	03-08-5
Secondary Air Solenoid	03-08-6
SPECIFICATIONS	03-08-6

VEHICLE APPLICATION

F-250 Heavy Duty, F-350 and F-Super Duty

Official Licensed Product
Ford Motor Company

DESCRIPTION AND OPERATION

Positive Crankcase Ventilation (PCV) System

The positive crankcase ventilation (PCV) system cycles crankcase gases back through the engine (6007) where they are burned. The positive crankcase ventilation valve (PCV valve)(6A666) regulates the amount of ventilation air and blow-by fuel vapor to the intake manifold (9424) and prevents backfire from traveling into the crankcase. The positive crankcase ventilation valve is mounted in a vertical position.

CAUTION: Do not remove the PCV system from the engine. Operating engine without PCV system will reduce both fuel economy and engine ventilation. This will weaken engine performance and shorten life.

Typical PCV Airflow Diagram

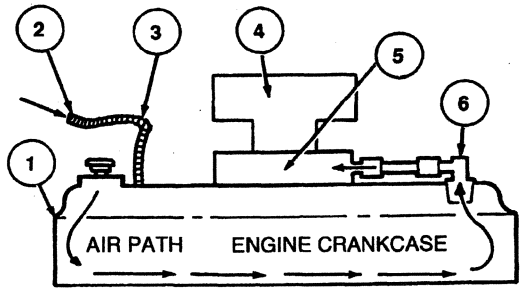

A18842-B

Item	Part Number	Description
1	6582	Valve Cover
2	—	To Air Cleaner Outlet Tube (9B659)
3	6758	Crankcase Ventilation Tube
4	9E926	Throttle Body

(Continued)

DESCRIPTION AND OPERATION (Continued)

Item	Part Number	Description
5	9424	Intake Manifold
6	6A666	Positive Crankcase Ventilation Valve

Exhaust Gas Recirculation (EGR) System

The exhaust gas recirculation (EGR) system is designed to do the following:

- reintroduce exhaust gas into the combustion cycle
- lower combustion temperatures
- reduce the formation of nitrous oxide (NOX)

The amount of exhaust gas reintroduced and the timing of the cycle varies by calibration. Timing and volume are controlled by the following:

- engine rpm
- engine vacuum
- exhaust system back pressure
- engine coolant temperature
- throttle position

The EGR valve (EGR valve)(9D475) is vacuum-activated. The vacuum hose routing diagram is shown on the vehicle emission control information (VECI) decal.

The EGR system is a differential pressure feedback EGR system. This is a subsonic closed loop EGR system. The system does the following:

- monitors EGR flow rate by the pressure drop across the metering orifice
- uses an EGR backpressure transducer (9J460) as the feedback device
- varies controlled pressure valve movement using vacuum output of the EGR vacuum regulator solenoid (9J459)
- allows for a more accurate assessment of EGR flow requirements

Differential Pressure Feedback EGR Flow Diagram

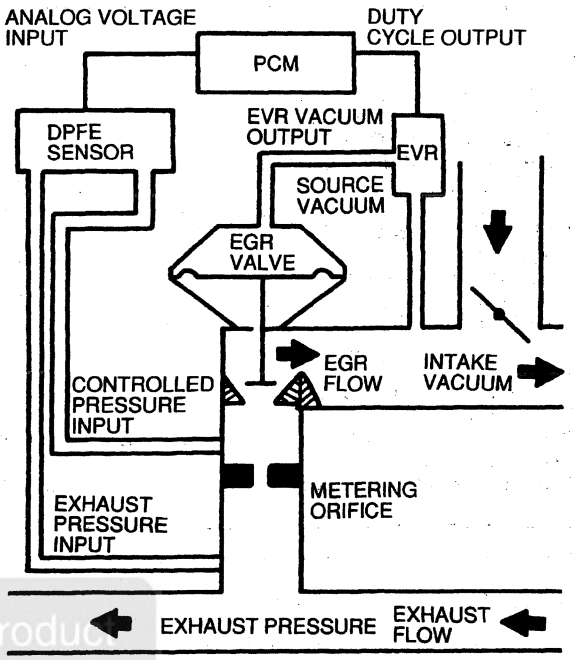

A14906-C

Exhaust Emission Control System

Vehicle Emission Control Information Decal

This section covers general engine emission control systems, their components and their functions. Engine emission control systems vary depending on vehicle model, vehicle type, engine and vehicle weight.

Vacuum hoses on the engine (6007) use a color stripe to aid in hose routing checks. The stripe will usually be the same color as on the VECI decal, but the correct vacuum hose routing must be verified by using the correct component connections shown on the VECI decal.

Official Licensed Product

DESCRIPTION AND OPERATION (Continued)

Typical Vehicle Emission Control Information (VECI) Decal

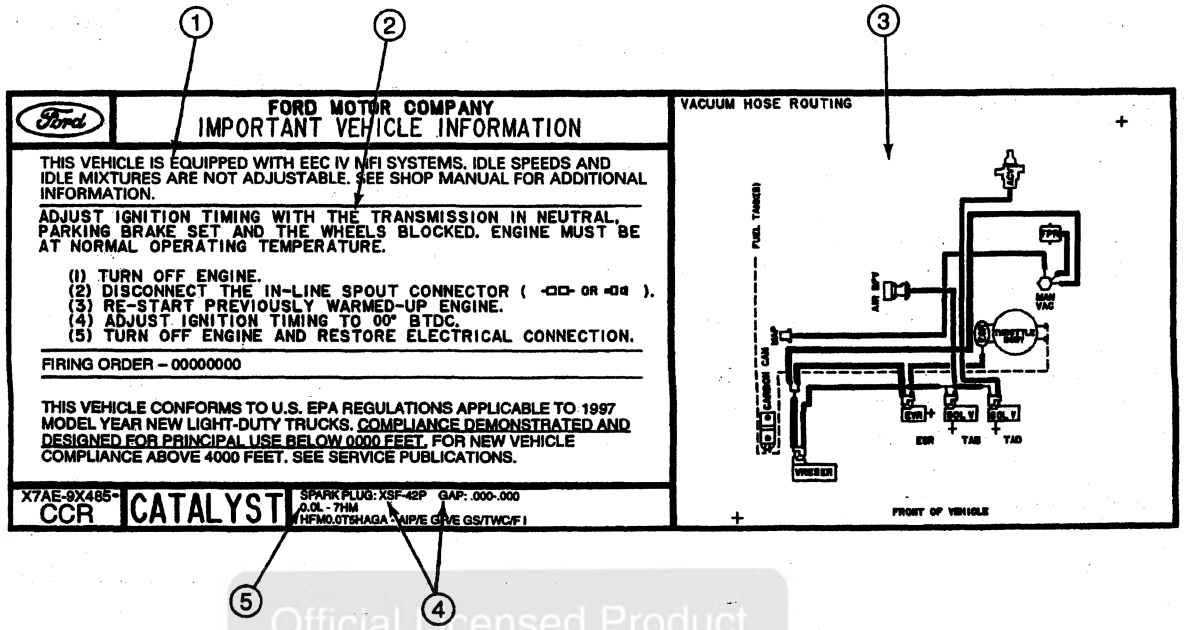

DA0478-A

Item	Part Number	Description
1	—	Adjustment Procedure Notes (Part of E7AE-9C485)
2	—	Ignition Timing Specification (Part of E7AE-9C485)
3	—	Engine Vacuum Hose Routing (Typical) (Part of E7AE-9C485)

Item	Part Number	Description
4	—	Spark Plug Gap Specification (Part of E7AE-9C485)
5	—	Engine Type (Part of E7AE-9C485)

(Continued)

Secondary Air Injection Bypass (AIRB) Valve

The secondary air injection bypass valve (9B289) is used in the following applications:

- in electronic controlled secondary air injection systems
- to divert secondary air to the atmosphere during some operating modes

Secondary Air Injection Diverter (AIRD) Valve

The secondary air injection diverter valve (9F491) is used in the following applications:

- in electronic controlled secondary air injection systems
- to divert secondary air upstream to the exhaust manifold check valve
- to divert secondary air downstream to the catalytic converter check valve

DIAGNOSIS AND TESTING

Engine Emission Control

Refer to the 1996 Powertrain Control / Emissions Diagnosis Manual [1]

IN-VEHICLE SERVICE

PCV Valve

Removal

1 NOTE Removal of the positive crankcase ventilation valve (PCV valve)(6A666) can require removal of the upper intake manifold Refer to Section 03-01A (5 8L engine) or Section 03-01B (7 5L engine).

Disconnect oil separator hose (6A664) from positive crankcase ventilation valve

2 Remove positive crankcase ventilation valve from crankcase ventilation grommet (6A892)

3 Inspect crankcase ventilation grommet for deterioration and replace if necessary

Installation

1 Follow removal procedure in reverse order

PCV Hoses

Crankcase Ventilation Connector and Hose

Removal

1 Disconnect crankcase vent connector and hose (6C324) from valve cover (6582) and engine air cleaner (ACL)(9600)

2 Remove crankcase vent connector and hose

Installation

1 Follow removal procedure in reverse order

Oil Separator Hose

Removal

1 Disconnect emission vacuum control hose from center of oil separator hose (6A664)

2 Disconnect oil separator hose from positive crankcase ventilation valve (PCV valve)(6A666) and upper intake manifold (9424) and remove oil separator hose

Installation

1 Follow removal procedure in reverse order

PCV Valve and Hoses, Typical

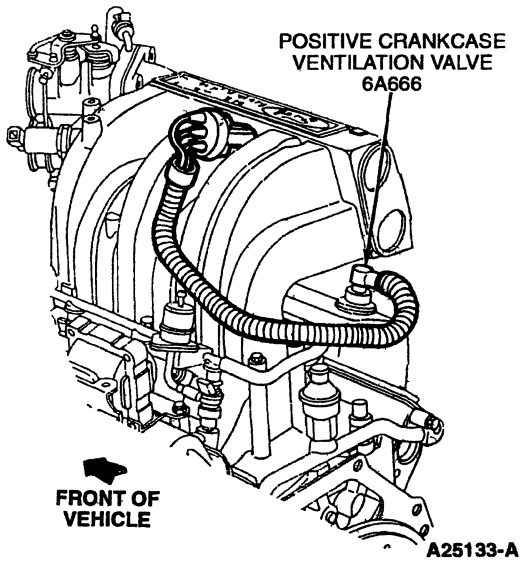

EGR Valve

Removal

1 Remove the air cleaner outlet tube (9B659)

2 Disconnect the EGR valve sensor wire harness at EGR valve sensor (9G428)

3 Disconnect the EGR valve to exhaust manifold tube (9D477) from EGR valve (EGR valve)(9D475) and vacuum hose

4 Remove EGR valve retainer bolts and EGR valve from upper intake manifold (9424)

5 Remove EGR valve gasket (9D476) Clean residue from upper intake manifold gasket surface

Installation

1 Follow removal procedure in reverse order

2 Tighten EGR valve-to-exhaust manifold tube nut to 34-47 N·m (25-35 lb-ft)

EGR Valve to Exhaust Manifold Tube

Removal

1 Remove the air cleaner outlet tube (9B659)

2 Disconnect the EGR valve sensor wire harness at EGR valve sensor (9G428)

3 Disconnect EGR valve to exhaust manifold tube (9D477) at EGR valve (EGR valve)(9D475) and exhaust manifold

4 Remove EGR valve tube-to-manifold connector from exhaust manifold (9430), if required

1 Can be purchased as a separate item

Official Licensed Product Ford Motor Company

IN-VEHICLE SERVICE (Continued)

Installation

1 Follow removal procedure in reverse order
2 Tighten tube to EGR valve and exhaust manifold to 34-47 N·m (25-35 lb-ft)

EGR System, 5 8L Engine

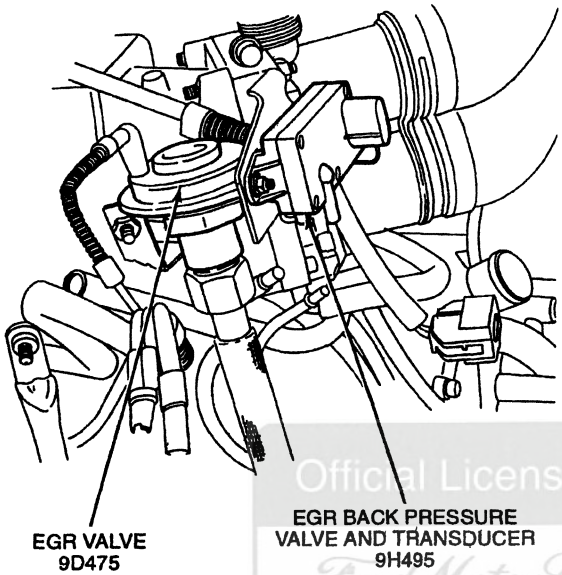

A25131-A

Official Licensed Product
Ford Motor Company

EGR Control Solenoid

Removal

1 Disconnect the battery ground cable (14301)
2 Disconnect vacuum hoses
3 Disconnect the EGR vacuum regulator solenoid (9J459) electrical connector
4 Remove nuts and slide the EGR vacuum regulator solenoid off the mounting bracket

Installation

1 NOTE When the battery (10655) has been disconnected and reconnected, some abnormal drive symptoms may occur while the powertrain control module (PCM)(12A650) relearns its adaptive strategy The vehicle may need to be driven 16 km (10 miles) or more to relearn the strategy

Follow removal procedure in reverse order

EGR Valve Position Sensor

Removal

1 Disconnect EGR valve sensor wire connector at EGR valve sensor (9G428)
2 Remove three EGR valve sensor retaining nuts
3 Remove EGR valve sensor from EGR valve (EGR valve)(9D475) Inspect and replace silicon gasket (if necessary)

Installation

1 Follow removal procedure in reverse order
2 Tighten EGR valve sensor retaining nuts to 15-18 N·m (11-13 lb-ft)

REMOVAL AND INSTALLATION

Secondary Air Injection Bypass (AIRB) Valve

Removal

1 Remove nut and bracket holding secondary air injection bypass valve inlet hose and tube (9H300)
2 Remove clamps from secondary air injection bypass valve hoses
3 Remove hoses from secondary air injection bypass valve (9B289)
4 Remove secondary air injection bypass valve from vehicle

Installation

1 Follow removal procedure in reverse order

Secondary Air Injection Diverter (AIRD) Valve, 5.8L Typical

Removal

1 Remove clamps from secondary air injection control valve hoses
2 Remove hoses from secondary air injection diverter valve (9F491)
3 Remove secondary air injection diverter valve from vehicle

Installation

1 Follow removal procedure in reverse order

CLEANING AND INSPECTION

PCV Valve

Cleaning the positive crankcase ventilation valve (PCV valve)(6A666) is not recommended, but it should be replaced at the specified mileage intervals

CLEANING AND INSPECTION (Continued)

Shake positive crankcase ventilation valve and carefully inspect for splits or cracks. If positive crankcase ventilation valve does not rattle or is damaged, replace positive crankcase ventilation valve.

EGR Valve

Inspect the EGR valve (EGR valve)(9D475) for blockage or contamination. Inspect EGR valve for vacuum leakage, replace if necessary.

EGR Control Solenoid

1. Disconnect the vacuum hoses.
2. Blow into the EGR valve (EGR valve)(9D475) and verify that air does not flow.
3. Disconnect the EGR valve electrical connector.
4. Apply battery voltage and a ground to the EGR vacuum regulator solenoid (9J459) as shown.

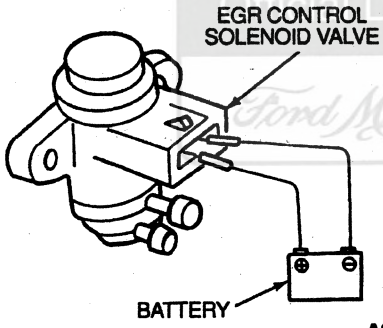

A23680-A

5. Blow through the EGR vacuum regulator solenoid and verify that air flows.
6. If not as specified, replace the EGR vacuum regulator solenoid.

Secondary Air Solenoid

1. Disconnect the vacuum hoses.
2. Blow through the secondary air injection control solenoid vacuum valve (9H465) and verify that air flows.
3. Disconnect the secondary air injection control solenoid vacuum valve electrical connector.
4. Apply battery voltage and a ground to the secondary air injection control solenoid vacuum valve as shown.

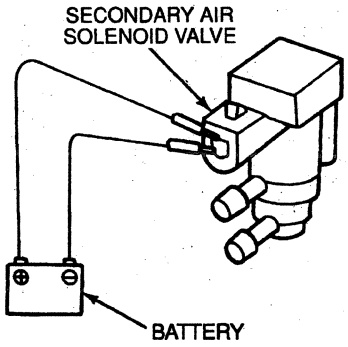

A23681-A

5. Blow into the secondary air injection control solenoid vacuum valve and verify that air does not flow.
6. If not as specified, replace the secondary air injection control solenoid vacuum valve.

Official Licensed Product Ford Motor Company

SPECIFICATIONS

TORQUE SPECIFICATIONS

Description	N·m	Lb-Ft
EGR Valve to Upper Intake Manifold	20-30	15-22
EGR Valve to Exhaust Manifold Tube Nuts	34-47	25-35
EGR Valve Sensor Retainer Nut	15-18	11-13

SECTION 03-12 Air Intake System

SUBJECT	PAGE
VEHICLE APPLICATION	03-12-1
DESCRIPTION AND OPERATION	
Air Cleaner Element	03-12-1
Air Induction System	03-12-1
Air Restriction Gauge	03-12-2
DIAGNOSIS AND TESTING	
Air Intake System	03-12-2
REMOVAL AND INSTALLATION	
Air Cleaner Element, 7.3L Direct Injection Diesel Engine	03-12-3
Air Cleaner Outlet Tube, 7.3L Direct Injection Diesel Engine	03-12-7
REMOVAL AND INSTALLATION (Cont'd.)	
Engine Air Cleaner Intake Duct and Tube, 7.3L Direct Injection Diesel Engine	03-12-2
Engine Air Cleaner, Gasoline Engines	03-12-3
CLEANING AND INSPECTION	
Air Cleaner Element	03-12-8
Air Inlet Restriction Check	03-12-8
Engine Air Cleaner	03-12-8
SPECIFICATIONS	03-12-8

VEHICLE APPLICATION

F-250 Heavy Duty, F-350 and F-Super Duty

DESCRIPTION AND OPERATION

Official Licensed Product
Ford Motor Company

Air Induction System

Air enters a dry-type engine air cleaner (ACL)(9600) and travels through a pleated, chemically treated, water-resistant paper air cleaner element (ACL element)(9601) to remove contaminants before entering the engine induction system. The 7.3L DI turbo diesel engine also uses a pleated-paper, upright-type element. Use of other than specific Ford replacement filters can result in significantly shortened filter life and consequent dirt injection.

Air Cleaner Element

Dry-type engine air cleaners (ACL)(9600) are standard on all vehicles.

Air enters the engine air cleaner and travels through a chemically treated and pleated paper air cleaner element (ACL element)(9601) before entering the engine induction system. The air cleaner element should be inspected, cleaned, or replaced periodically. The air cleaner system has an intake air temperature sensor (IAT sensor)(12A697) mounted in the engine air cleaner to monitor inlet air temperature (on some models).

On diesel engines, replace air cleaner element according to air restriction gauge.

DESCRIPTION AND OPERATION (Continued)

Air Restriction Gauge

The 7.3L diesel air induction system uses an air restriction gauge to indicate when to replace the air filter element. The air filter element should be replaced when the yellow band in the restriction gauge reaches the "CHANGE FILTER" mark. Engine performance and fuel economy are adversely affected when maximum restriction is reached. After servicing the air filter element, the restriction gauge can be reset by pushing the button on the end of the gauge. The restriction gauge is located on the clean-air side of the air cleaner upper housing.

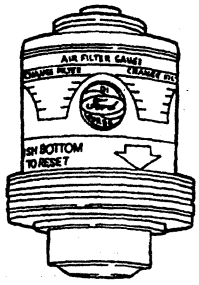

AIR RESTRICTION GAUGE Y5191-C

DIAGNOSIS AND TESTING

Air Intake System

Refer to the 1996 Powertrain Control / Emissions Diagnosis Manual.[1]

REMOVAL AND INSTALLATION

Engine Air Cleaner Intake Duct and Tube, 7.3L Direct Injection Diesel Engine

Removal

1. Remove screw retaining air cleaner duct to radiator support.
2. Disconnect duct from housing.

Installation

1. Follow removal procedure in reverse order.
2. Tighten retaining screws to 7-9 N·m (62-80 lb-in).

Engine Air Cleaner Intake Duct Assembly

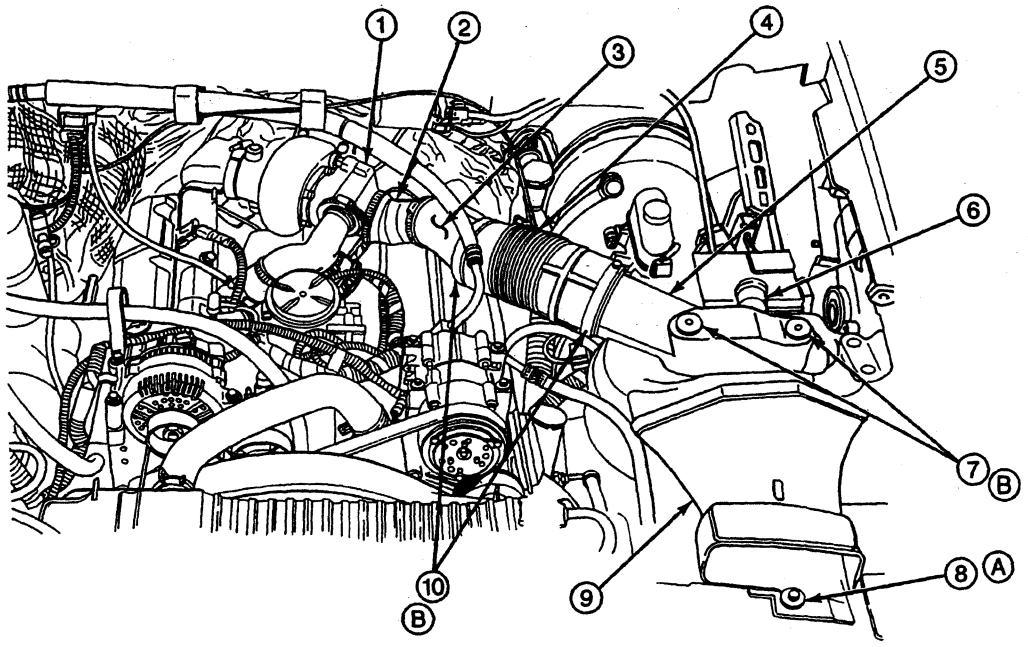

DV0322-A

1 Can be purchased as a separate item.

REMOVAL AND INSTALLATION (Continued)

Item	Part Number	Description
1	6K682	Turbocharger
2	—	Compressor Duct Elbow Clamp (Part of 6K682)
3	—	Compressor Duct Elbow (Part of 6K682)
4	9B676	Engine Air Cleaner Duct Tube Adapter
5	9600	Engine Air Cleaner
6	9N622	Restriction Gauge

(Continued)

Item	Part Number	Description
7	9B680	Nut
8	N800576-S301	Screw
9	9A624	Engine Air Cleaner Intake Tube
10	—	Clamps (Part of 9B676)
A	—	Tighten to 7-9 N·m (62-80 Lb-In)
B	—	Tighten to 2-3 N·m (18-27 Lb-In)

Air Cleaner Element, 7.3L Direct Injection Diesel Engine

Removal

1. Remove engine air cleaner intake tube (9A624) (refer to Engine Air Cleaner Intake Duct and Tube, 7.3L Direct Injection Diesel Engine in the Removal and Installation portion of this section).
2. Loosen hose clamp retaining engine air cleaner (ACL)(9600) to engine air cleaner duct tube adapter (9B676).
3. Loosen nuts retaining upper air cleaner housing to lower air cleaner housing. Remove upper housing.
4. Before installing new element in air cleaner assembly, check the following items:
   - Gasket surfaces should be clean and undamaged.
   - Air cleaner element (ACL element)(9601) should be dry and free of holes, ruptures, damaged gaskets or dents in housings and liners.
   - Water drain tube should be free of obstructions.

Installation

CAUTION: A special filtering element is required on 7.3L diesel engines. Use only a specific Ford replacement. Use of other elements can result in serious engine damage. Do not attempt to clean element. Discard and replace.

After the air cleaner housing, air cleaner element and other parts are found in good condition, reassemble the parts.

1. Install the air cleaner element.
2. Install the upper housing. Make sure seal is in place.
3. Tighten upper air cleaner housing nuts to 2-3 N·m (18-27 lb-in). Secure engine air cleaner duct tube adapter to engine air cleaner. Tighten to 2-3 N·m (18-27 lb-in).
4. Replace engine air cleaner intake tube. Install screw to attach engine air cleaner intake tube to radiator support. Tighten to 7-9 N·m (62-80 lb-in).

Engine Air Cleaner, Gasoline Engines

Refer to the illustrations in this section for removal and installation of the various types of engine air cleaners (ACL)(9600). Reference to the illustrations will enable the service technician to perform the required removal and installation or service operations. For all engines, refer to the following procedure.

Removal

1. Loosen hose clamp(s) securing hose assembly to engine air cleaner.
2. Remove screws attaching engine air cleaner to bracket.
3. Disconnect hose and inlet tube from air closure hose / filter pack, where required.
4. Remove screws retaining air cleaner cover, where required.
5. Remove air filter and tubes.

Installation

1. Set air cleaner element (ACL element)(9601) into proper position.
2. Position air cleaner cover to tray. Make sure air cleaner element is seated while positioning cover.
3. Install screws to secure cover, where required.
4. Install bolts to secure engine air cleaner to support bracket.
5. Install fresh air inlet tube to air closure hose / filter pack, where required.
6. Install air supply tube to engine air cleaner and retain with clamp(s). Tighten clamp(s).

REMOVAL AND INSTALLATION (Continued)

Engine Air Cleaner Installation, F-250 Heavy Duty and F-350 with 5.8L Engine

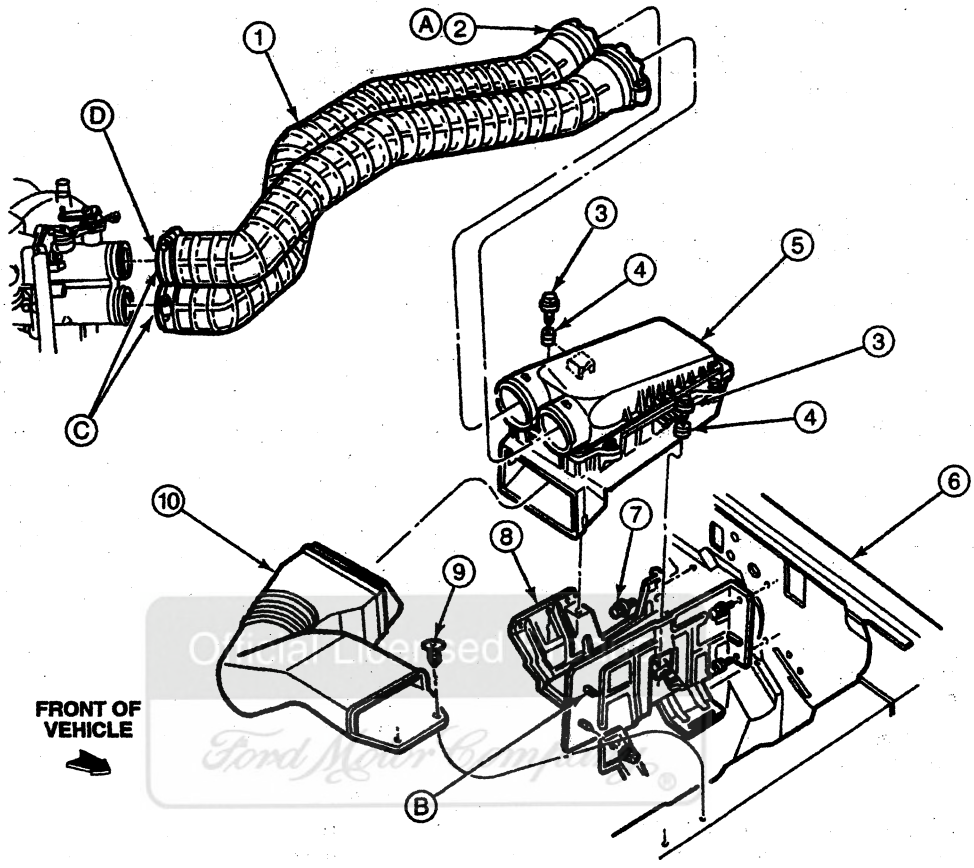

A25123-A

Item	Part Number	Description
1	9B659	Air Cleaner Outlet Tube
2	—	Hose Clamp (Part of 9B659)
3	N611062-S2	Screw and Washer, M6-3 x 1.81 x 32
4	17C431	Grommet
5	9600	Engine Air Cleaner
6	16005	Left Fender
7	N610958-S2	Screw, M6-3 x 1.81 x 16
8	9626	Engine Air Cleaner Mounting Bracket
9	388577-S150	Pushpin
10	9A624	Engine Air Cleaner Intake Tube

(Continued)

Item	Part Number	Description
A	—	Tighten to 2-3 N-m (18-27 Lb-In)
B	—	Water Bottle Affixed at This Location
C	—	Use Water or Rubber Lubricant D9A2-19583-A or Equivalent to Facilitate Installation of Hose Assy to Throttle Body
D	—	Surface Must Meet Against Throttle Body Stop Flange for 360 Degrees (Both Tubes)

REMOVAL AND INSTALLATION (Continued)

Typical Engine Air Cleaner Installation, F-250 Heavy Duty, F-350 and F-Super Duty Chassis Cab, 7.5L MFI Engine

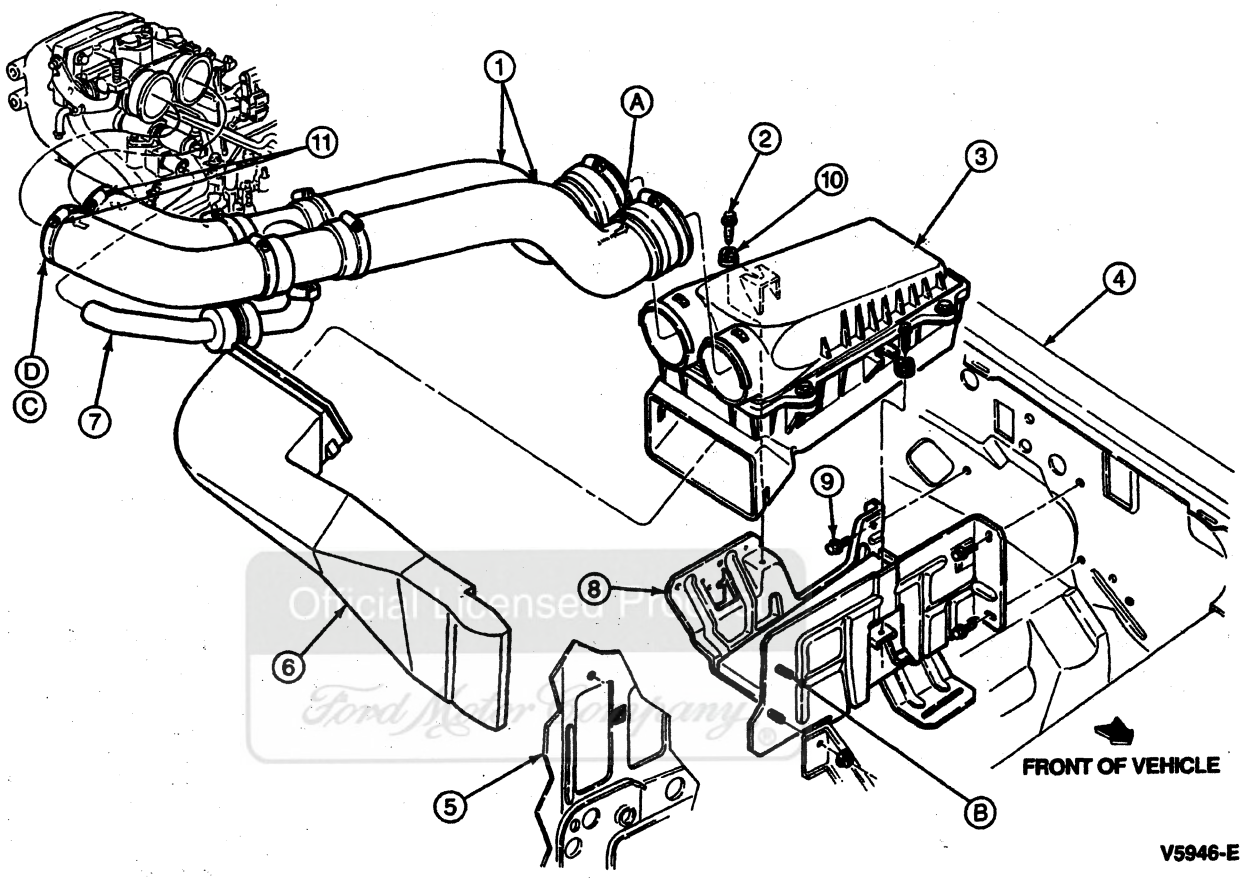

Item	Part Number	Description
1	9B659	Air Cleaner Outlet Tube
2	N611062-S2	Capscrew and Washer Assy (2 Required)
3	9600	Engine Air Cleaner
4	16005	Left Fender
5	16138	Radiator Support
6	9A624	Engine Air Cleaner Intake Tube
7	9H308	Clamp
8	9626	Engine Air Cleaner Mounting Bracket
9	N610958-S2	Screw (4 Required)
10	17C431	Grommet (2 Required)

(Continued)

Item	Part Number	Description
11	—	Hose Clamp (2 Required) (Part of 9R504)
A	—	Hose Assy Arrows Must Be in Line with Air Cleaner Cover Arrows ± 2 Degrees
B	—	Water Bottle Affixed at This Location
C	—	Surface Must Meet Against Throttle Body Stop Flange for 360 Degrees (Both Tubes)
D	—	Hose Assy Arrows Must Be in Line with Locators on Throttle Body ± 2 Degrees

REMOVAL AND INSTALLATION (Continued)

Engine Air Cleaner Installation, F-Super Duty Motorhome Chassis, 7.5L MFI Engine

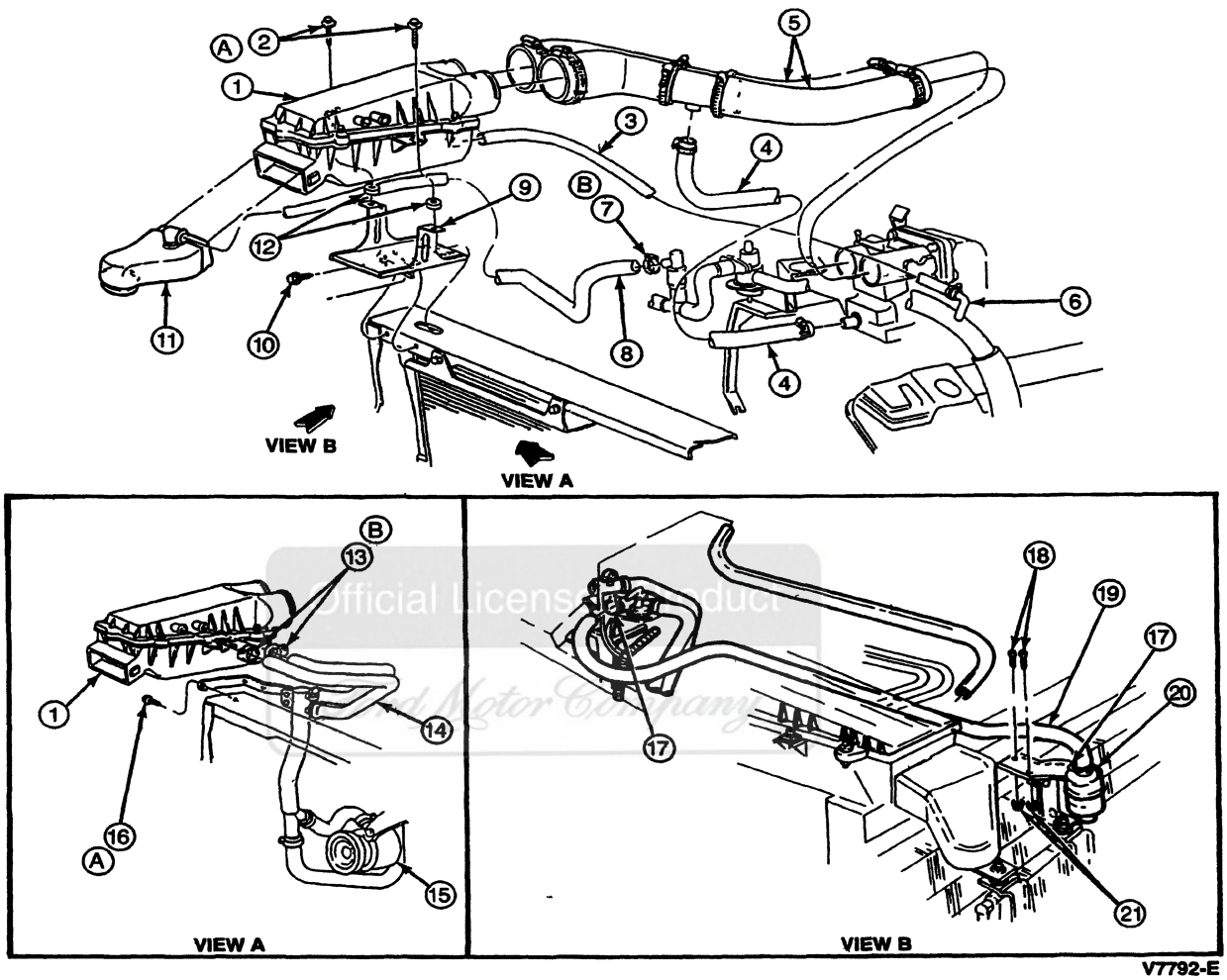

Item	Part Number	Description
1	9600	Engine Air Cleaner
2	N611062-S2	Screw
3	6853	Crankcase Ventilation Hose
4	9H308	Idle Air Control Valve Inlet Tube
5	9B659	Air Cleaner Outlet Tube
6	—	Crankcase Vent (Part of 9H308)
7	388497-S100	Clamp
8	9J435	Secondary Air Injection Silencer Inlet Hose
9	9646	Air Cleaner Bracket Assy
10	N610958	Screw (2 Req'd)
11	9A624	Engine Air Cleaner Intake Tube

(Continued)

Item	Part Number	Description
12	17C431	Grommet Assy (2 Required)
13	—	Clamp (Part of 9S449)
14	9B458	Secondary Air Injection Pump Inlet Hose
15	9A486	Secondary Air Injection Pump
16	N610958-S2	Screw
17	9H447	Secondary Air Injection Tube Lower Clamp
18	N620549-S2	Bolt
19	9H467	Exhaust Air Supply Pump Hose
20	8597	Water Bypass Valve
21	N620481-S2	Nut

(Continued)

REMOVAL AND INSTALLATION (Continued)

Item	Part Number	Description
A	—	Tighten to 7-9 N·m (62-80 Lb-In)

(Continued)

Item	Part Number	Description
B	—	Tighten to 2-3 N·m (18-27 Lb-In)

Engine Air Cleaner Installation, 7.3L Direct Injection Diesel Engine

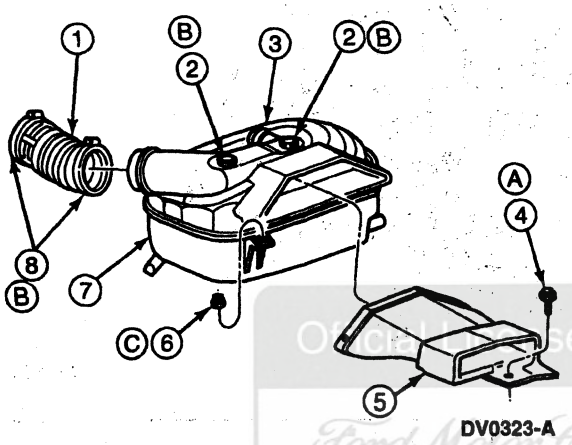

Item	Part Number	Description
1	9B676	Engine Air Cleaner Duct Tube Adapter
2	9B680	Nut
3	9N622	Restriction Gauge
4	N800576-S301	Screw
5	9A624	Engine Air Cleaner Intake Tube

(Continued)

Item	Part Number	Description
6	N800889-S301	Nut and Washer
7	9600	Engine Air Cleaner Assy
8	—	Engine Air Cleaner Duct Tube Adapter Clamp (Part of 9B676)
A	—	Tighten to 7-9 N·m (62-80 Lb-In)
B	—	Tighten to 2-3 N·m (18-27 Lb-In)
C	—	Tighten to 5-7 N·m (44-62 Lb-In)

Air Cleaner Outlet Tube, 7.3L Direct Injection Diesel Engine

Removal

1. Loosen clamp retaining engine air cleaner duct tube adapter (9B676) to air cleaner assembly.
2. Loosen clamp retaining tube to turbocharger air intake tube. Remove air cleaner duct.

Installation

1. Follow removal procedure in reverse order.
2. Tighten clamp to 2-3 N·m (18-27 lb-in).

Official Licensed Product Ford Motor Company

REMOVAL AND INSTALLATION (Continued)

Turbocharger Air Intake Tube Assembly

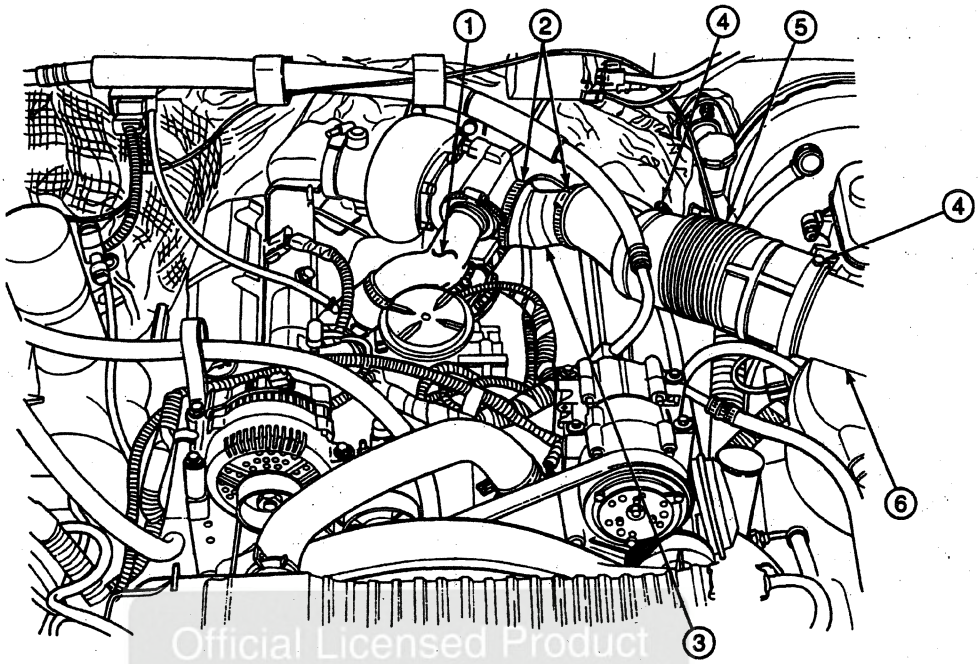

Y5248-A

Official Licensed Product
Ford Motor Company

Item	Part Number	Description
1	—	Air Inlet Manifold Crossover Pipe (Part of 6K682)
2	—	Compressor Duct Clamp (Part of 6K682)
3	—	Compressor Duct (Part of 6K682)

Item	Part Number	Description
4	—	Engine Air Cleaner Duct Tube Adapter Clamp (Part of 9B676)
5	9B676	Engine Air Cleaner Duct Tube Adapter
6	9600	Engine Air Cleaner

(Continued)

CLEANING AND INSPECTION

Air Inlet Restriction Check

Remove air inlet tube as outlined, inspect for foreign material and remove. Reinstall air inlet tube.

Air Cleaner Element

Inspect for foreign material, oil accumulation and distortion. Replace according to the maintenance schedule or air restriction gauge for diesel.

Engine Air Cleaner

Remove particles and foreign debris from engine air cleaner (ACL)(9600). Inspect assembly for cracks and wear, replace if damaged.

SPECIFICATIONS

TORQUE SPECIFICATIONS

Description	N·m	Lb-In
Clamp, Air Cleaner Outlet Tube, 5.8L Engine	2-3	18-27
Clamp, Air Cleaner Outlet Tube, 7.5L Engine	2-3	18-27
Screw, Air Cleaner to Bracket, 7.5L Engine, Motorhome Chassis	9-11	80-97
Clamp, Secondary Air Injection Silencer Inlet Hose	2-3	18-27
Clamp, Secondary Air Injection Pump Inlet Hose	2-3	18-27
Screw, Secondary Air Injection Body Bracket	9-11	80-97
Clamp, Air Cleaner Duct Tube Adapter, 7.3L Diesel Engine	2-3	18-27

(Continued)

SPECIFICATIONS (Continued)

TORQUE SPECIFICATIONS (Cont'd)

Description	N·m	Lb-In
Screw, Air Cleaner Inlet Tube	7-9	62-80
Nut, Air Cleaner Assembly	5-7	44-62
Nuts, Air Cleaner, Upper Housing, 7.3L Diesel Engine	2-3	18-27

Official Licensed Product
Ford Motor Company

SECTION 03-13 Evaporative Emission

SUBJECT	PAGE
VEHICLE APPLICATION	03-13-1
DESCRIPTION AND OPERATION	
Evaporative Emission Canister	03-13-3
Evaporative Emission Canister Purge Valve	03-13-3
Evaporative Emission Control System	03-13-1
Evaporative Emission Hose	03-13-3
Fill Control Vent System	03-13-2
Pressure and Vacuum Relief System	03-13-4
Evaporative Emission Separator	03-13-4
Fuel Tank Filler Cap	03-13-4
System Components	03-13-2
Engine Evaporative Emission System	03-13-2
Fuel Tank Evaporative Emission System	03-13-2
DIAGNOSIS AND TESTING	
Evaporative Emission	03-13-6
Inspection and Verification	03-13-6
Pinpoint Test	03-13-6
Symptom Chart	03-13-6
REMOVAL AND INSTALLATION	
Evaporative Emission Canister	03-13-7
Evaporative Emission Canister Purge Regulator Valve	03-13-16
Evaporative Emission Hose	03-13-8
Evaporative Emission Valve	03-13-16
SPECIFICATIONS	03-13-16
SPECIAL SERVICE TOOLS/EQUIPMENT	03-13-16

VEHICLE APPLICATION

F-250 Heavy Duty, F-350 and F-Super Duty

DESCRIPTION AND OPERATION

Official Licensed Product

Evaporative Emission Control System

As a part of the fuel system, vehicles are equipped with a fuel evaporative emission control system designed to meet federal and state requirements in effect at the time of production.

WARNING: THE EVAPORATIVE EMISSION SYSTEM CONTAINS FUEL VAPOR AND CONDENSED FUEL VAPOR. ALTHOUGH NOT PRESENT IN LARGE QUANTITIES, IT STILL PRESENTS THE DANGER OF EXPLOSION OR FIRE. DISCONNECT THE BATTERY GROUND CABLE (14301) FROM THE BATTERY TO MINIMIZE THE POSSIBILITY OF AN ELECTRICAL SPARK OCCURRING, POSSIBLY CAUSING A FIRE OR EXPLOSION IF FUEL VAPOR OR LIQUID FUEL ARE PRESENT IN THE AREA.

CAUTION: Fuel supply tubes on vehicles with fuel injected engines (6007) will remain pressurized for long periods of time after engine shutdown. The pressure must be relieved before servicing the fuel system. Refer to Section 10-00. For servicing information on fuel tubes, refer to Section 10-01A.

Evaporative emission systems have been designed and tested to exceed 193,080 km (120,000 miles) or 10 years of vehicle use. No maintenance or service should be required. However, if components have been damaged and need to be replaced, or there is a need to remove and reinstall or disconnect components for other reasons, such as diagnosis, refer to the procedures and illustrations in this section to aid in servicing the system.

Evaporative emission systems are shown in the illustrations. Refer to these illustrations for component location and installation instructions.

Use Ford-approved parts for replacement of fuel and vapor hoses and tubes. Original equipment components are designed to resist most environmental conditions encountered in the evaporative emission system.

DESCRIPTION AND OPERATION (Continued)

Fill Control Vent System

Fill limiting is accomplished through fill pipe configuration or external vent tubes within the fuel tank filler pipe (9034) and fuel tank (9002) The vent system is designed to permit at least 10 percent fuel tank volume air space when the fuel tank is filled to capacity This air space provides for thermal expansion of fuel, as well as being an aid to the in-tank vapor vent system

This system provides a vapor space above the gasoline surface in the fuel tank This area is sufficient to permit adequate breathing space for the evaporative emission valve (9B593) under static and most dynamic conditions This is accomplished by the evaporative emission valve that is centrally located on the upper surface of the fuel tank

All evaporative emission valves make use of a small orifice in order to allow only vapor and not fuel to pass into the tube running forward to the evaporative emissions canister (EVAP canister)(9D653) On all vehicles, the assembly mounts directly to the top of the fuel tank using a fuel vapor separator seal

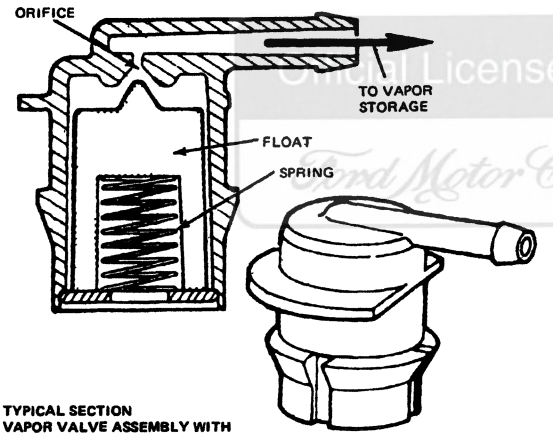

TYPICAL SECTION
VAPOR VALVE ASSEMBLY WITH
FLOAT VALVE AND INTERNAL SPRING
V1780-1E

Fuel vapors trapped in the sealed fuel tank are vented through the orificed evaporative emission valve in the top of the fuel tank The vapors leave the evaporative emission valve through a single vapor tube and continue to the evaporative emissions canister for storage, until they are purged to the engine (6007)

System Components

Fuel Tank Evaporative Emission System

The evaporative emission system limits the amount of fuel vapor a vehicle can release to the atmosphere, enabling the vehicle to meet current federal and state requirements for fuel evaporation

The following are components of the evaporative emission system

- Sealed fuel tank (9002)
- Fuel tank filler cap (9030)
- Evaporative emission valve (9B593)
- Evaporative emissions canister (EVAP canister)(9D653)
- Evaporative emission canister valve (9B963) (some engines)
- Evaporative emission canister purge valve (EVAP canister purge valve)(9C915) (some engines)

The system works by capturing a very high percentage of fuel vapors that might otherwise escape from the fuel tank It then directs these vapors to the evaporative emissions canister where they are stored while the engine (6007) is not running When the engine is running, and conditions are acceptable, the vapors are purged out of the evaporative emissions canister and into the engine This clears the evaporative emissions canister and allows it to accept more fuel vapors the next time the engine is shut off

The system is basically the same for all vehicle and engine tubes a hose or tube runs from the fuel vapor valve at the top of the fuel tank to the evaporative emissions canister to allow fuel vapors to pass from the tank to the evaporative emissions canister An evaporative emission return tube (9G271) runs from the evaporative emissions canister to the engine, allowing vapors to be purged from the evaporative emissions canister Some engines use additional valves in one or more of these tubes to provide additional control over how much or when fuel vapor will be allowed to pass

Engine Evaporative Emission System

This system consists of

- Evaporative emission canister valve (some vehicles)
- Evaporative emissions canister
- Solenoid vent valve and purge regulator valve (some vehicles)
- Secondary air bypass valve (some vehicles)
- Thermal vent valve (some vehicles)

Not all of these components are used on any one system, since usage depends on the calibration of the complete vehicle

System control and operation are accomplished through five separate basic functions in the system

1 Fill control venting
2 Tank vapor venting and storage system
3 Fuel vapor return system
4 Fuel vapor purge system
5 Pressure and vacuum relief system (fuel tank filler cap and tank vent valve)

Ford Motor Company

DESCRIPTION AND OPERATION (Continued)

Evaporative Emission Canister

Typical evaporative emissions canisters (EVAP canister)(9D653) are shown in the following illustration. The evaporative emissions canister is normally mounted in or near the engine compartment. Two basic sizes are employed: 925 ml or 1400 ml. The 925 and 1400 refer to volume of activated carbon contained within the evaporative emissions canister. Activated carbon is the working part of the evaporative emissions canister. It has the unique ability to absorb (store) and purge (remove) fuel vapors by passing fresh air through the carbon bed. It is able to do this over and over with almost no loss in ability to absorb and purge.

Thus, all sources of fuel vapor (fuel tank (9002) and purge control valve) are routed to the evaporative emissions canister for absorption of fuel vapor.

Evaporative Emission Canisters, Typical

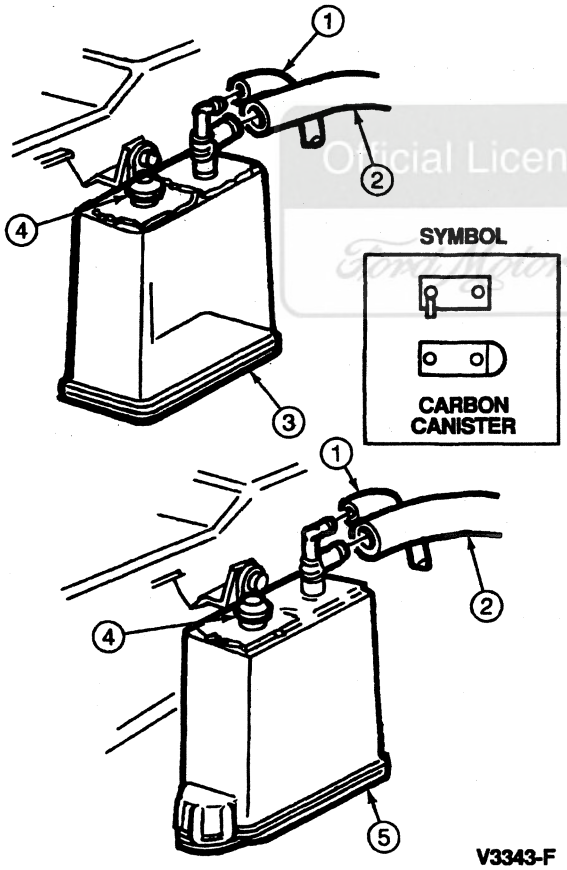

Item	Part Number	Description
1	9A220	Fuel Vapor Tube from Fuel Tank
2	9G271	Evaporative Emission Return Tube (From Purge Control Valve)

(Continued)

Item	Part Number	Description
3	9D653	Evaporative Emissions Canister, 1400 ml (1.48 Qts.)
4	—	Fresh Air
5	9D653	Evaporative Emissions Canister, 925 ml (0.98 Qts.)

Evaporative Emission Hose

The fuel vapor front hose transmits vapor from the evaporative emission canister purge valve (EVAP canister purge valve)(9C915) and evaporative emission return tube (9G271) to the evaporative emissions canister (EVAP canister)(9D653).

Evaporative Emission Canister Purge Valve

A typical evaporative emission canister purge valve (EVAP canister purge valve)(9C915) is shown in the following illustration. The evaporative emission canister purge valve is located in the vapor tube between the evaporative emissions canister (EVAP canister)(9D653) and the throttle body (9E926), and is normally in the closed position until electrically energized.

The operation of the evaporative emission canister purge valve is controlled by the powertrain control module (PCM)(12A650). When the engine (6007) is off, the evaporative emission canister purge valve is not energized and is in a closed, nonflowing condition. When the engine is running, the powertrain control module reads engine rpm, engine load, engine temperature and other variables, and decides the proper time for the engine to accept fuel vapors. When this occurs, the powertrain control module energizes the evaporative emission canister purge valve, allowing flow from the evaporative emissions canister to the intake manifold. The vapors are then consumed in the engine. This action purges the evaporative emissions canister of fuel vapors. It occurs as fresh air is sucked into the evaporative emissions canister under the fresh air inlet cap of the evaporative emissions canister and through the activated carbon bed. This allows the stored fuel vapors to pass from the evaporative emissions canister through the evaporative emission return tube (9G271) and the evaporative emission canister purge valve, and into the engine.

DESCRIPTION AND OPERATION (Continued)

Fuel Vapor Canister Purge Regulator Valve

CANISTER PURGE SOLENOID (CPRV) (-9C915-)

- **USED WITH CLOSED LOOP**
- **NORMALLY CLOSED, SOLENOID VACUUM VALVE**
- **PURGES ON SIGNAL FROM ECA; USUALLY AT WARM AND HOT CRUISE**

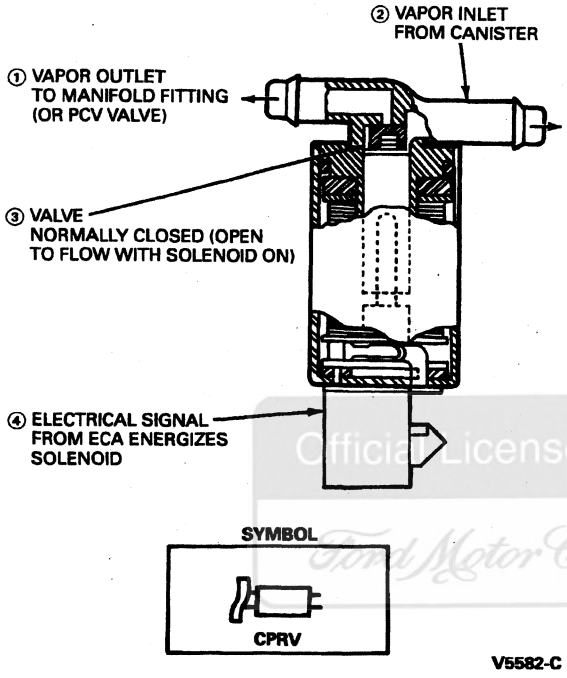

Pressure and Vacuum Relief System

Fuel Tank Filler Cap

The fuel tank filler cap (9030) is sealed and includes a built-in pressure-vacuum relief valve. Fuel system vacuum relief is provided after 3.5 kPa (0.50 psi) and pressure relief after 11.0 kPa (1.6 psi). Under normal operating conditions, the fuel tank filler cap operates as a check valve, allowing air to enter the tank as fuel is used, while preventing vapors from escaping the tank through the cap.

NOTE: Use of an aftermarket fuel tank filler cap other than an authorized Ford/Motorcraft service part can result in damage to the fuel system or improper system operation if not properly designed/manufactured for pressure-vacuum relief. Customer warranty is void for fuel tank or fuel system damage resulting from the use of such caps.

Evaporative Emission Separator

Fuel Vapor Valve

The evaporative emission canister valve (9B963) is in line with the evaporative emissions canister (EVAP canister)(9D653) and controls the flow of fuel vapors out of the evaporative emissions canister. It is a normally closed valve that opens with vacuum input. Operation of the evaporative emission canister valve is shown in the following illustration. Also shown are views of typical evaporative emission canister valves.

Official Licensed Ford Motor Company

DESCRIPTION AND OPERATION (Continued)

Fuel Vapor Valve, Typical

PURGE CONTROL VALVE OPERATION (PURGE CV) (-9B963-)

- **NORMALLY CLOSED**
- **OPENS VAPOR INLET TO PURGE OUTLET WITH VACUUM APPLIED**

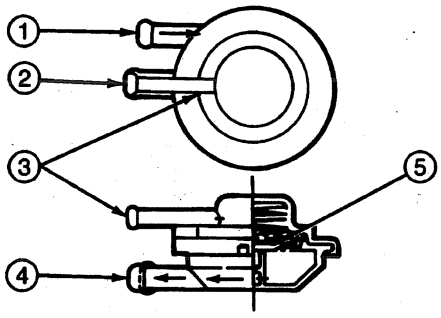

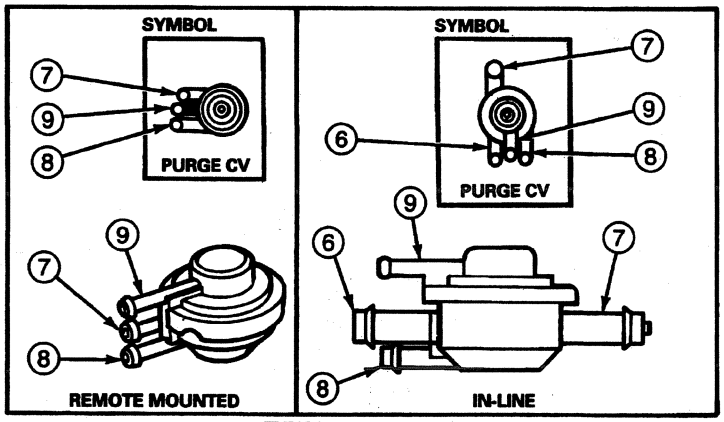

TYPICAL PURGE VALVES V5581-C

Item	Part Number	Description
1	—	Vapor Inlet Port (Connects to Fuel Vapor Canister)
2	—	Purge Outlet Port (Large 63 mm) (1/4 Inch Nominal O.D.) Connects to Vacuum Source
3	—	Signal Vacuum Port (48 mm) (3/16 Inch Nominal O.D.) Connects to Control Vacuum Source
4	—	Vapors Flow Out (with Vacuum On)

Item	Part Number	Description
5	—	Diaphragm Is Normally Held Closed by Spring
6	—	Vent Port (Part of 9B963)
7	—	Vapor Inlet Port (Part of 9B963)
8	—	Purge Port (Part of 9B963)
9	—	Signal Vacuum Port (Part of 9B963)

(Continued)

Evaporative Emission Valve, 5.8L MFI and 7.5L MFI Engines

The evaporative emission valve (9B593) mounted on the top of the fuel tank (9002) is used to control the flow of fuel vapor entering the fuel tank vapor delivery line that conducts vapor forward to the evaporative emissions canister in normal circumstances. If, due to extreme conditions, excessive pressure is generated inside the tank, the purge port opens up, allowing fuel vapor to escape to the atmosphere, stabilizing pressure inside the fuel tank. The evaporative emission valve has a head valve that prevents the fuel tank from overfilling during refueling operation. The evaporative emission valve also has a spring-supported float assembly, which prevents liquid fuel from entering the vapor delivery tube during severe handling, steep grades or in the event of vehicle rollover.

Evaporative Emission Valve

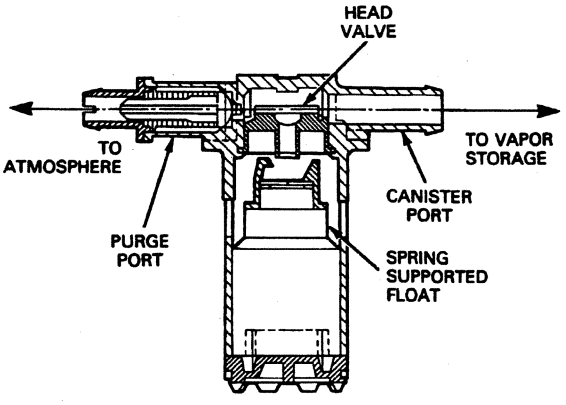

V7470-1A

DIAGNOSIS AND TESTING

Evaporative Emission

Refer to the 1996 Powertrain Control / Emissions Diagnosis Manual[1] for individual components.

Inspection and Verification

1. Verify the vehicle owner's original concern by removing fuel tank filler cap (9030) to duplicate the condition.
2. Inspect to determine if the following mechanical concerns apply:

VISUAL INSPECTION CHART

Mechanical
• Hissing sound or release of pressure as the fuel tank filler cap is removed from the fuel tank filler pipe

3. If the concern(s) is verified by the inspection, determine the symptoms and proceed to the following symptom chart.

Symptom Chart

EVAPORATIVE EMISSION

Condition	Possible Source	Action
• Fuel Tank Pressure Abnormal	• Evaporative emission hoses or inlets blocked. • Tubes or hoses kinked or pinched.	• GO to Pinpoint Test A.

Pinpoint Test

Official Licensed Product

PINPOINT TEST A: FUEL TANK PRESSURE ABNORMAL

	Test Step	Result	Action to Take
A1	CANISTER HOSE AND INLET TUBE BLOCKAGE TEST		
	• Test canister fuel vapor hose and inlet nipple for blockage. • **Are fuel vapor hoses or inlet blocked?**	Yes ▶ No ▶	GO to **A2**. GO to **A6**.
A2	FUEL EVAPORATIVE EMISSION SYSTEM BLOCKAGE TEST		
	• Test fuel tank evaporative emission system for blockage. • **Are all system passages open?**	Yes ▶ No ▶	REMOVE blockage or REPLACE component. GO to **A7**.
A3	VAPOR TUBE INSPECTION		
	• Inspect vapor tube and fuel vapor hoses for kinks or pinched areas. • **Are tube or fuel vapor hoses kinked or pinched?**	Yes ▶ No ▶	SERVICE or REPLACE tube or fuel vapor hoses. VERIFY service. GO to **A4**.
A4	VAPOR HOSE INSPECTION		
	• Inspect vapor hose routing between fuel tank and body for pinch. • **Is vapor hose pinched?**	Yes ▶ No ▶	LOOSEN fuel tank and REROUTE hose. VERIFY service. GO to **A5**.
A5	FUEL VAPOR VALVE INSPECTION		
	• Remove fuel tank. • Remove evaporative emission valve. • Inspect evaporative emission valve for open air passage through orifice. • **Is air passage open?**	Yes ▶ No ▶	INSTALL evaporative emission valve in fuel tank. INSTALL fuel tank. System test complete. REPLACE evaporative emission valve. VERIFY service.

1 Can be purchased as a separate item.

DIAGNOSIS AND TESTING (Continued)

PINPOINT TEST A: FUEL TANK PRESSURE ABNORMAL (Continued)

Test Step		Result ▶	Action to Take
A6	FLOW TEST (FUEL TANK FILLER CAP INSTALLED)		
	CAUTION: Do not use other high-pressure air supplies, as damage to the evaporative emissions canister can result. ● Install hand pump and pressure gauge, Rotunda Vacuum Tester 014-R1054 or equivalent, in fuel vapor hose at test point B1. ● Hand pump to a maximum of 17.2 kPa (2.5 psi). ● **Does pressure drop to zero immediately?**	Yes ▶ No ▶	System flow OK. GO to **A2**. PERFORM Pinpoint Test Step **A3**.
A7	FLOW TEST (FUEL TANK FILLER CAP REMOVED)		
	CAUTION: Failure to remove fuel tank filler cap can result in damage to the fuel tank. ● Remove fuel tank filler cap from fuel tank filler pipe.	Yes ▶ No ▶	System OK, no service required. PERFORM Pinpoint Test Step **A4**.

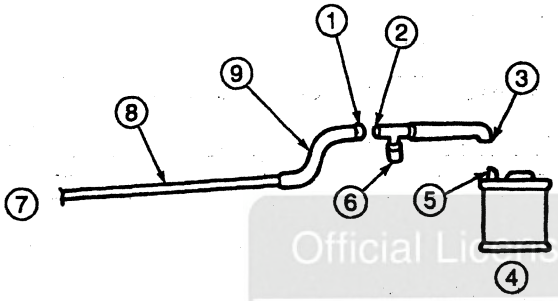

A23682-A

Item	Part Number	Description
1	—	Test Point B2 with Tee
2	—	Test Point B1 with Tee
3	—	Test Point B2 Without Tee
4	9D653	Evaporative Emissions Canister
5	—	Test Point B1 Without Tee
6	—	Close Off Line
7	—	To Fuel Tank
8	9G271	Vapor Tube
9	9G297	Vapor Hose

CAUTION: Do not use other high-pressure air supplies, as damage to the fuel tank can result.
- Install hand pump and pressure gauge onto tee or fuel vapor canister nipple at test point B2.
- Hand pump to a maximum of 17.2 kPa (2.5 psi).
- **Does pressure drop to zero immediately?**

Official Licensed Product
Ford Motor Company

REMOVAL AND INSTALLATION

Evaporative Emission Canister

Removal

Refer to the appropriate illustration for component location.

1. Disconnect vapor hoses from evaporative emissions canister (EVAP canister)(9D653).
2. Remove screw retaining evaporative emissions canister to fuel bracket (9D664) or fender apron.

REMOVAL AND INSTALLATION (Continued)

3. Lift evaporative emissions canister to disengage tab on back side of evaporative emissions canister, and remove evaporative emissions canister.

Installation

1. Follow removal procedure in reverse order.
2. Tighten retaining screw to 5-7 N·m (44-62 lb-in).

Evaporative Emission Hose

Removal

1. Disconnect the hose clamps from both ends of the evaporative emission hose (9G297) or tube to be removed.
2. Remove the evaporative emission hose from the component. Do not pull on the evaporative emission hose without firmly holding the component in place.
3. Disconnect the evaporative emission hose from all retainers and remove the evaporative emission hose.

Installation

1. NOTE: When replacing the evaporative emission hose or tube, use original equipment size and length.

   Follow removal procedure in reverse order.
2. Inspect the evaporative emission hose and adjust it to remove any crimps and restrictions.

Vapor Tubes, Short Wheelbase

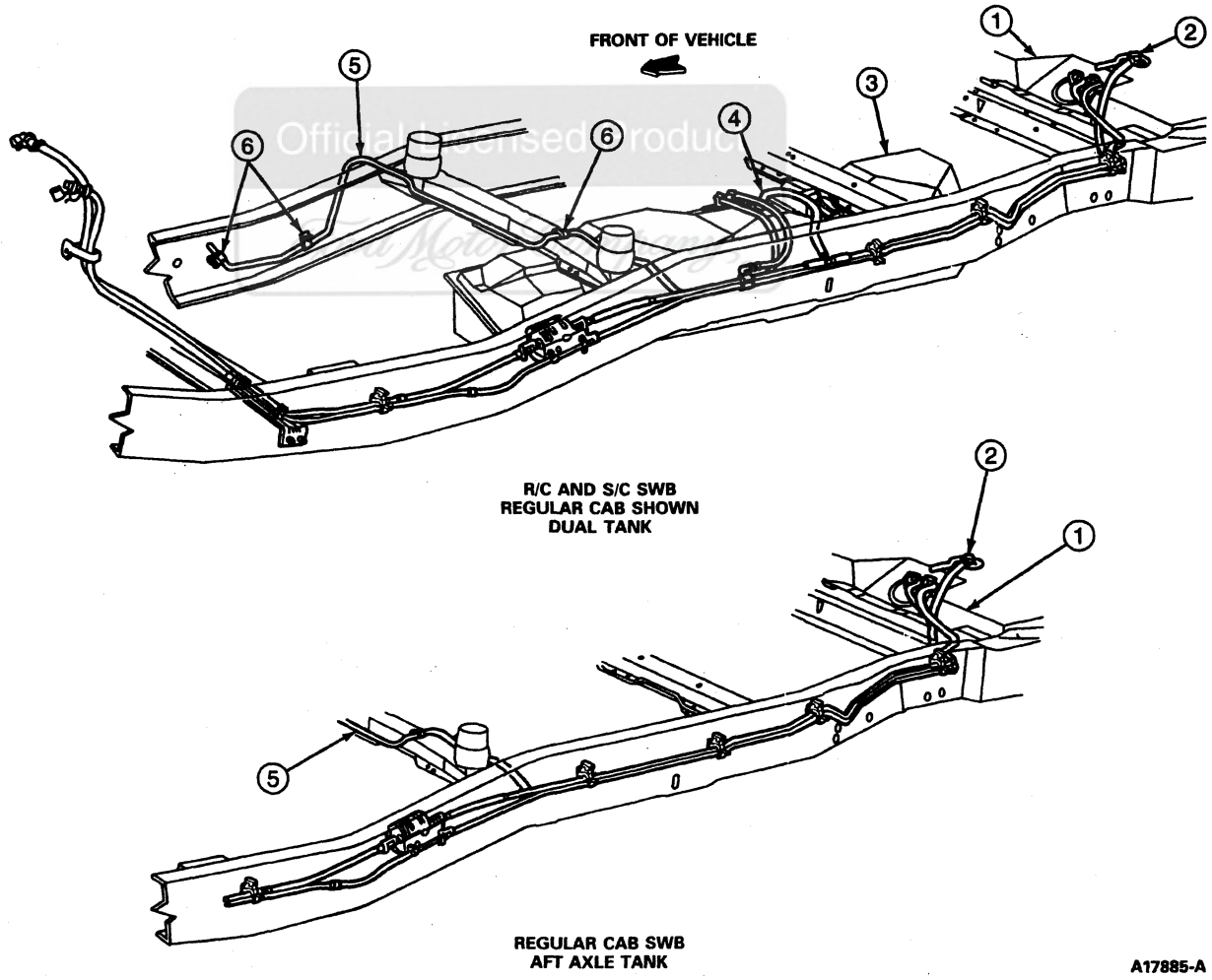

REMOVAL AND INSTALLATION (Continued)

Item	Part Number	Description
1	9002	Fuel Tank, Aft of Axle
2	9C987	Evaporative Valve Assy
3	9002	Fuel Tank, Midship
4	9B227	Evaporative Hose and Valve Assy

(Continued)

Item	Part Number	Description
5	9C016	Vapor Return Tube and Hose Assy
6	9A317	Fuel Tube Clip

Vapor Tubes, Long Wheelbase

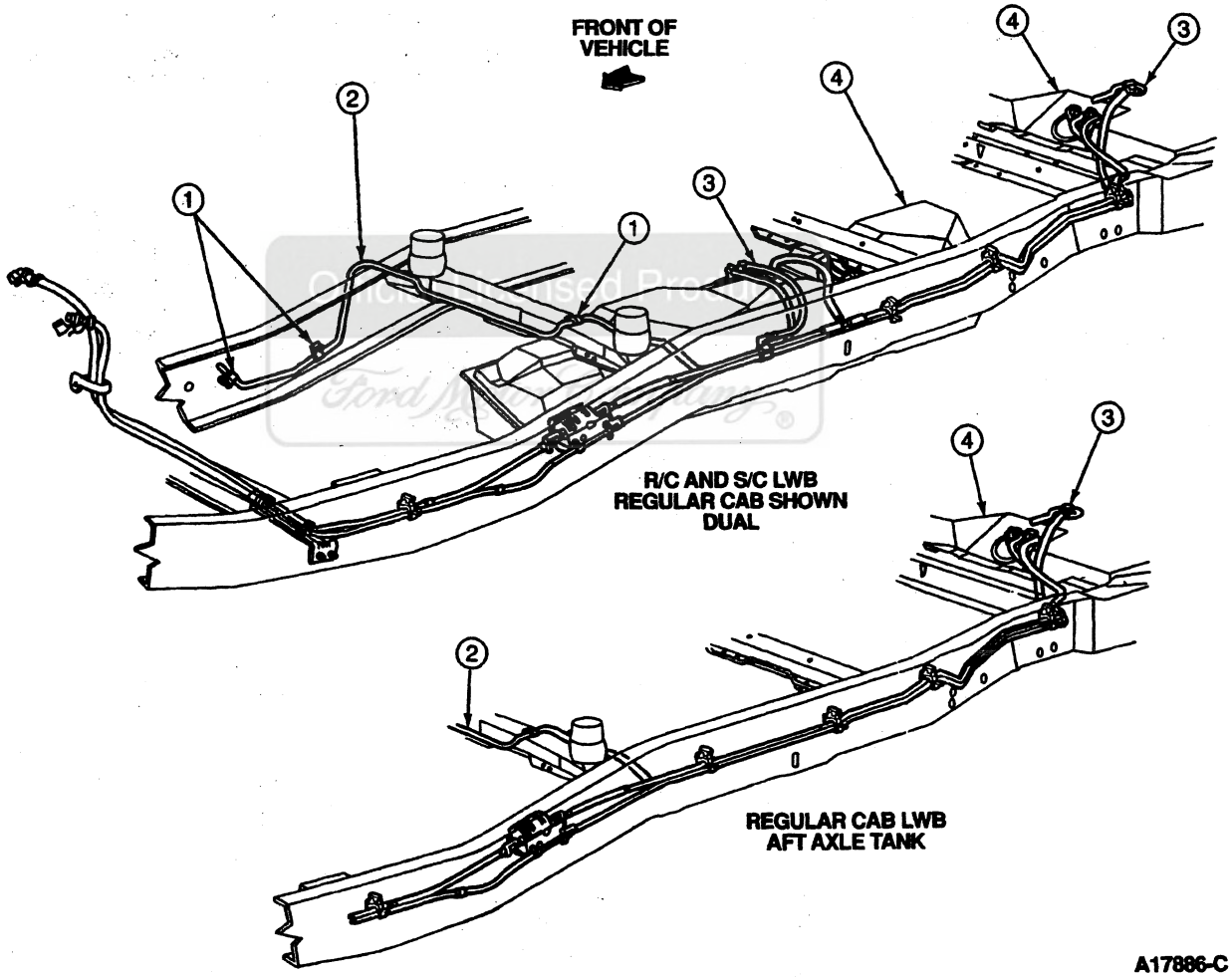

Item	Part Number	Description
1	9A317	Fuel Tube Clip
2	9C016	Vapor Return Tube and Hose Assy

(Continued)

Item	Part Number	Description
3	9C987	Evaporative Valve Assy
4	9002	Fuel Tank

REMOVAL AND INSTALLATION (Continued)

Vapor Tubes, Chassis Cab

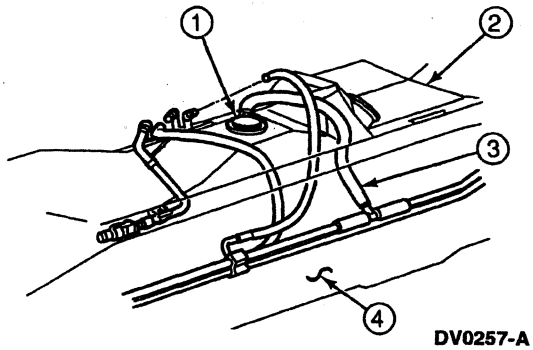

DV0257-A

Item	Part Number	Description
3	9C016	Vapor Return Tube and Hose Assy
4	5005	Frame

Item	Part Number	Description
1	9C987	Evaporative Valve Assy
2	9002	Fuel Tank

(Continued)

Official Licensed Product
Ford Motor Company

Engine Vapor Tubes, 5.8L

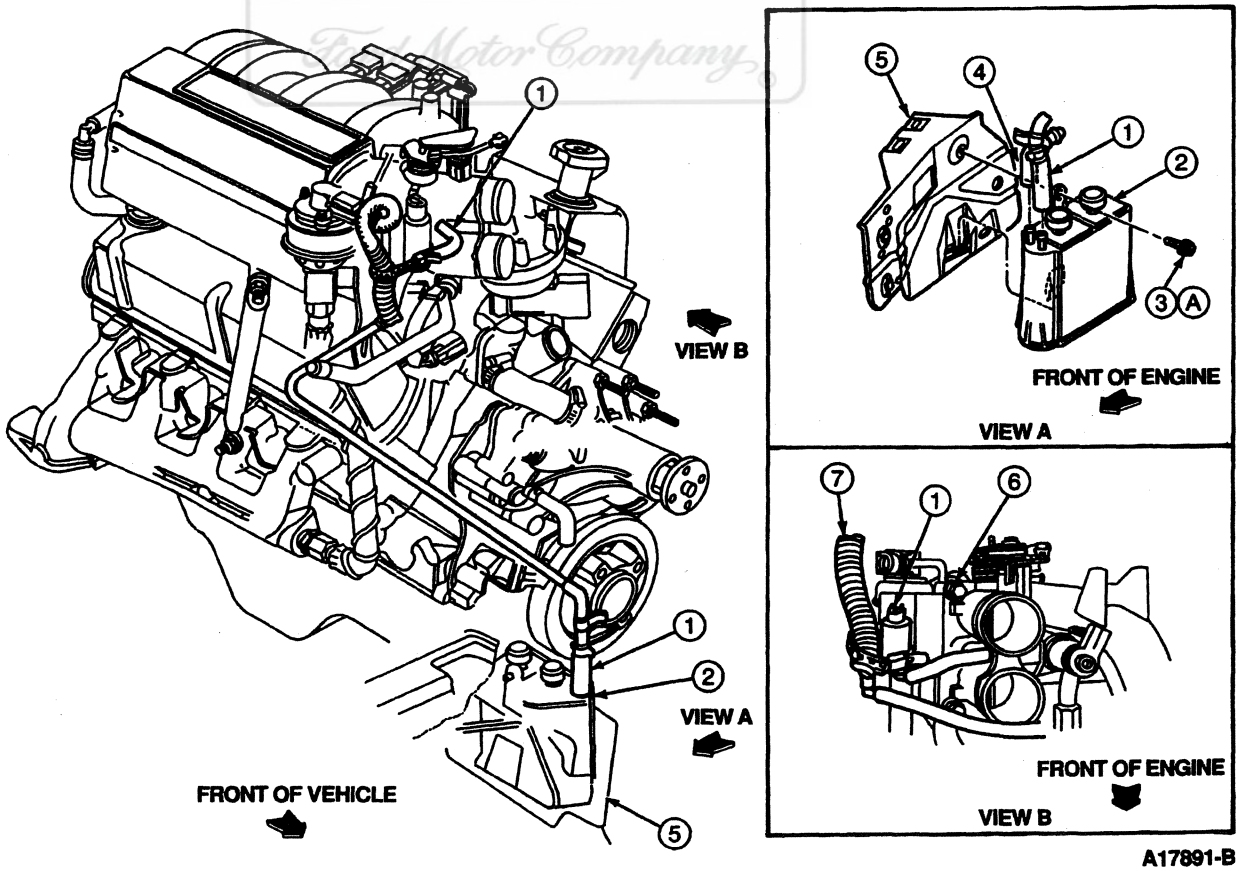

A17891-B

REMOVAL AND INSTALLATION (Continued)

Item	Part Number	Description
1	9C987	Fuel Vapor Return Hose and Valve Assy
2	9D653	Evaporative Emissions Canister
3	N800369-S2	Screw, M6.3-1.81 x 16.0
4	9A220	Fuel Vapor Return Hose Assy

(Continued)

Item	Part Number	Description
5	10A812	Battery Tray Support
6	9E926	Throttle Body
7	12A581	Wiring Assy
A	—	Tighten to 5-7 N·m (44-62 Lb-In)

Official Licensed Product
Ford Motor Company

REMOVAL AND INSTALLATION (Continued)

Engine Vapor Tubes, F-250 Heavy Duty and F-350 with 5.8L Engine

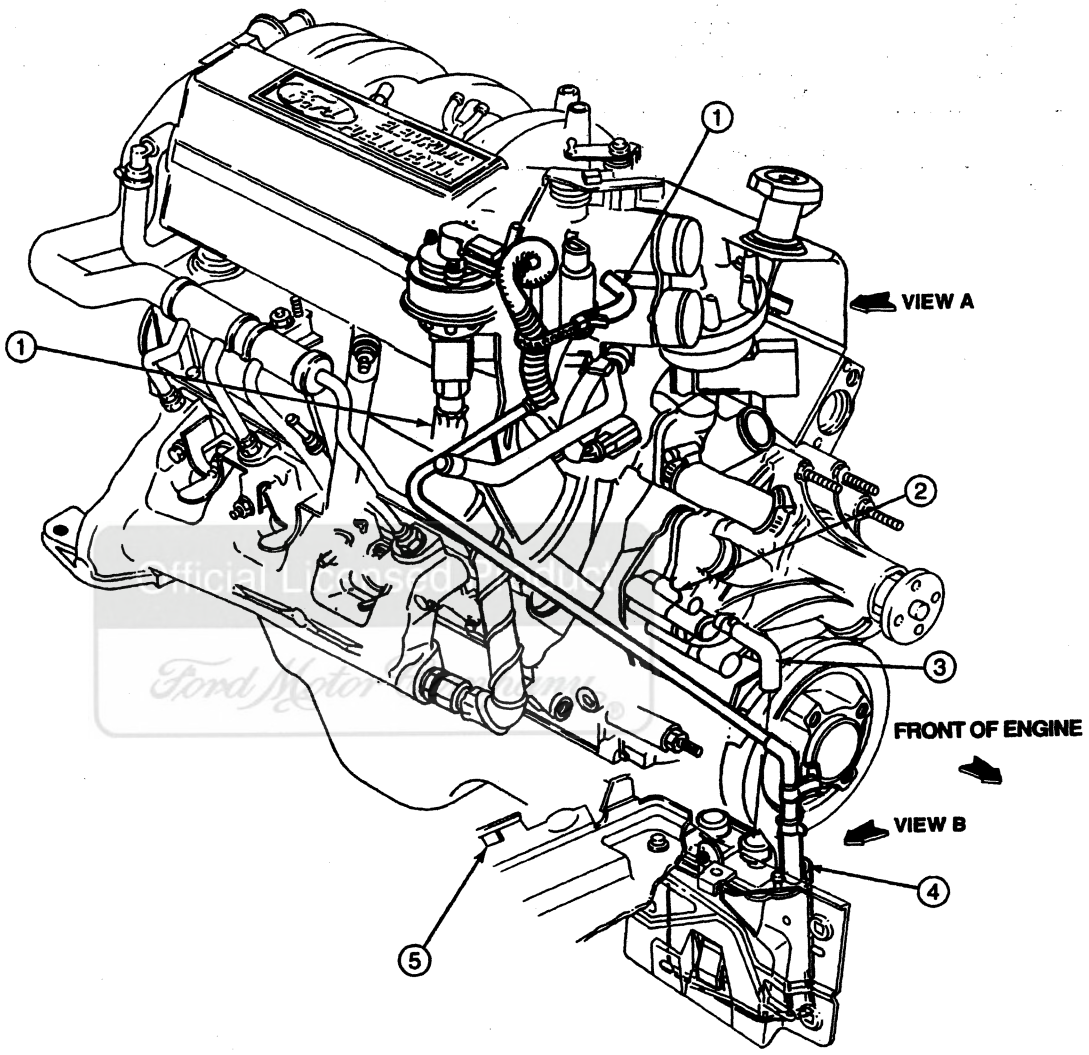

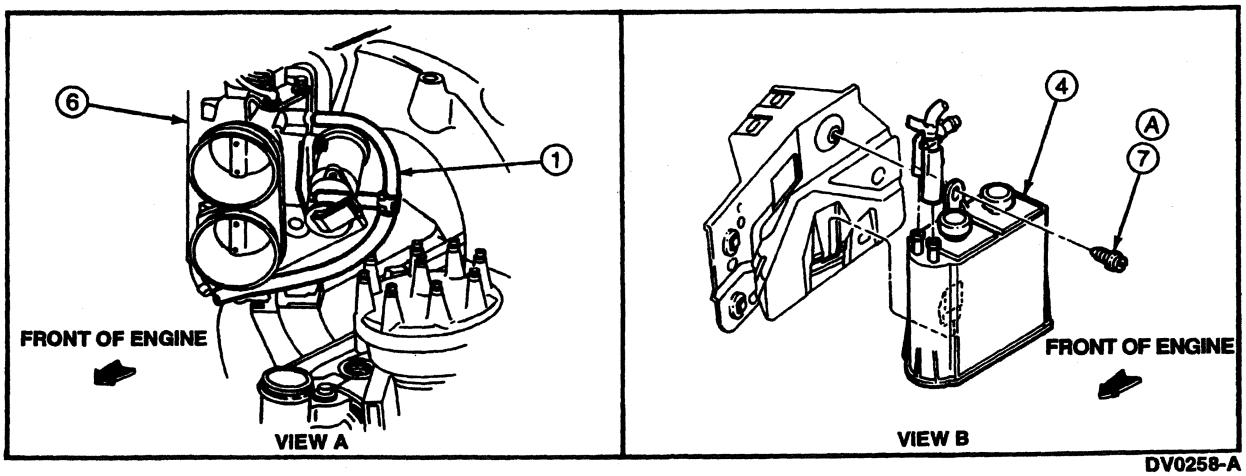

REMOVAL AND INSTALLATION (Continued)

Item	Part Number	Description
1	9C987	Fuel Vapor Return Hose and Valve Assy
2	9C016	Fuel Tank Vapor Tube
3	9A220	Fuel Vapor Return Connector Assy
4	9D653	Evaporative Emissions Canister

(Continued)

Item	Part Number	Description
5	10732	Battery Tray
6	9E926	Throttle Body
7	N800369-S2	Screw
A	—	Tighten to 5-7 N·m (44-62 Lb-In)

Official Licensed Product
Ford Motor Company

REMOVAL AND INSTALLATION (Continued)

Engine Vapor Tubes, F-250 Heavy Duty and F-350 with 7.5L Engine

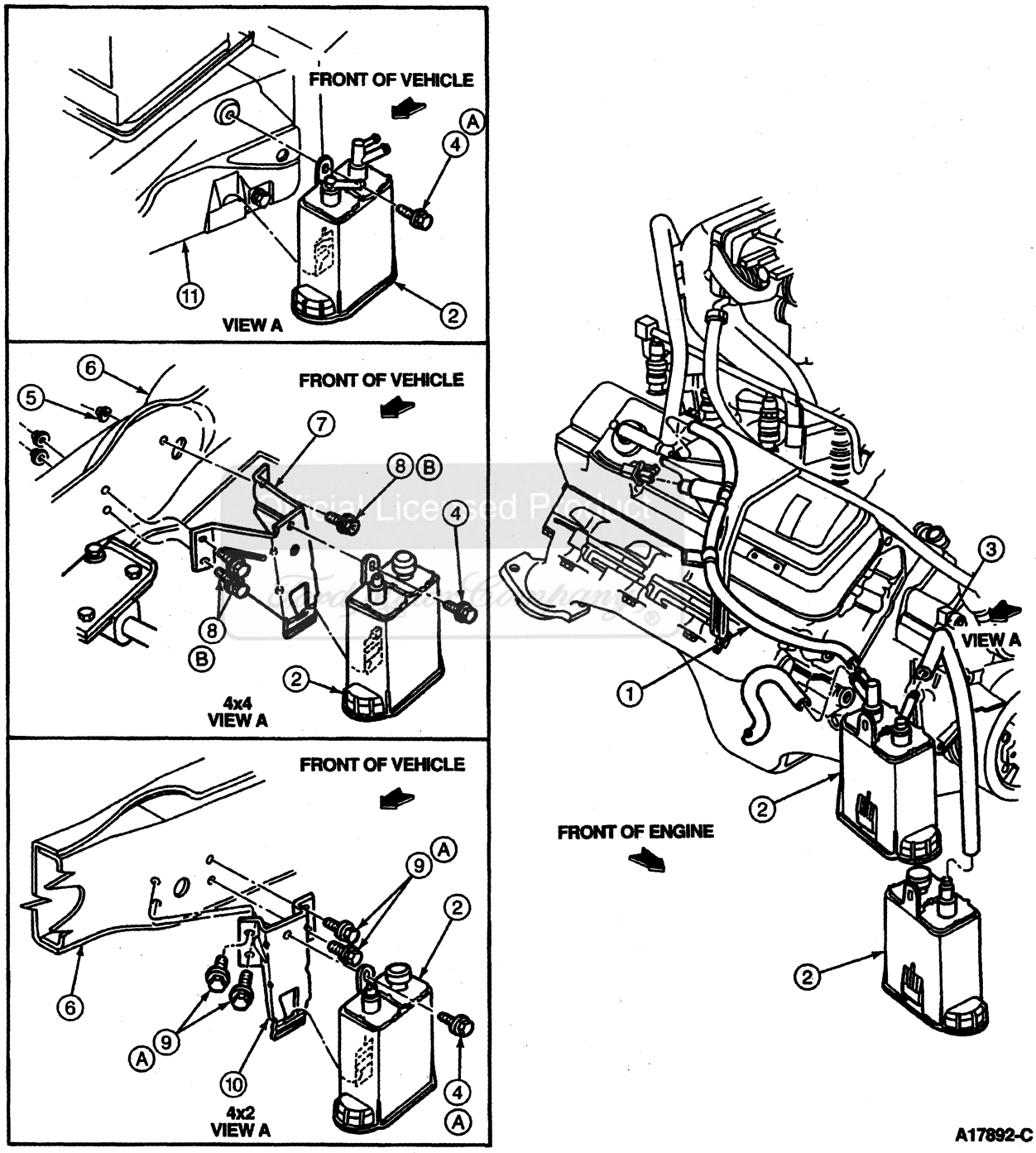

REMOVAL AND INSTALLATION (Continued)

Item	Part Number	Description
1	9C987	Fuel Vapor Return Hose and Valve
2	9D653	Evaporative Emissions Canister
3	9G297	Evaporative Emission Hose
4	N800369-S2	Screw, M6.3-1.81 x 16.0
5	N620481-S2	Nut, M8-1.25
6	5005	Frame
7	9D664	Fuel Bracket (4x4 Vehicles)

(Continued)

Item	Part Number	Description
8	N605786-S2	Bolt, M8-1.25 x 20
9	W611635-S2	Screw, M8-1.25 x 20
10	9D664	Fuel Bracket (4x2 Vehicles)
11	—	Right Fender Apron Reinforcement Assy (Part of 10A812)
A	—	Tighten to 5-7 N·m (44-62 Lb-In)
B	—	Tighten to 20-30 N·m (15-22 Lb-Ft)

Engine Vapor Tubes, F-Super Duty with 7.5L Engine

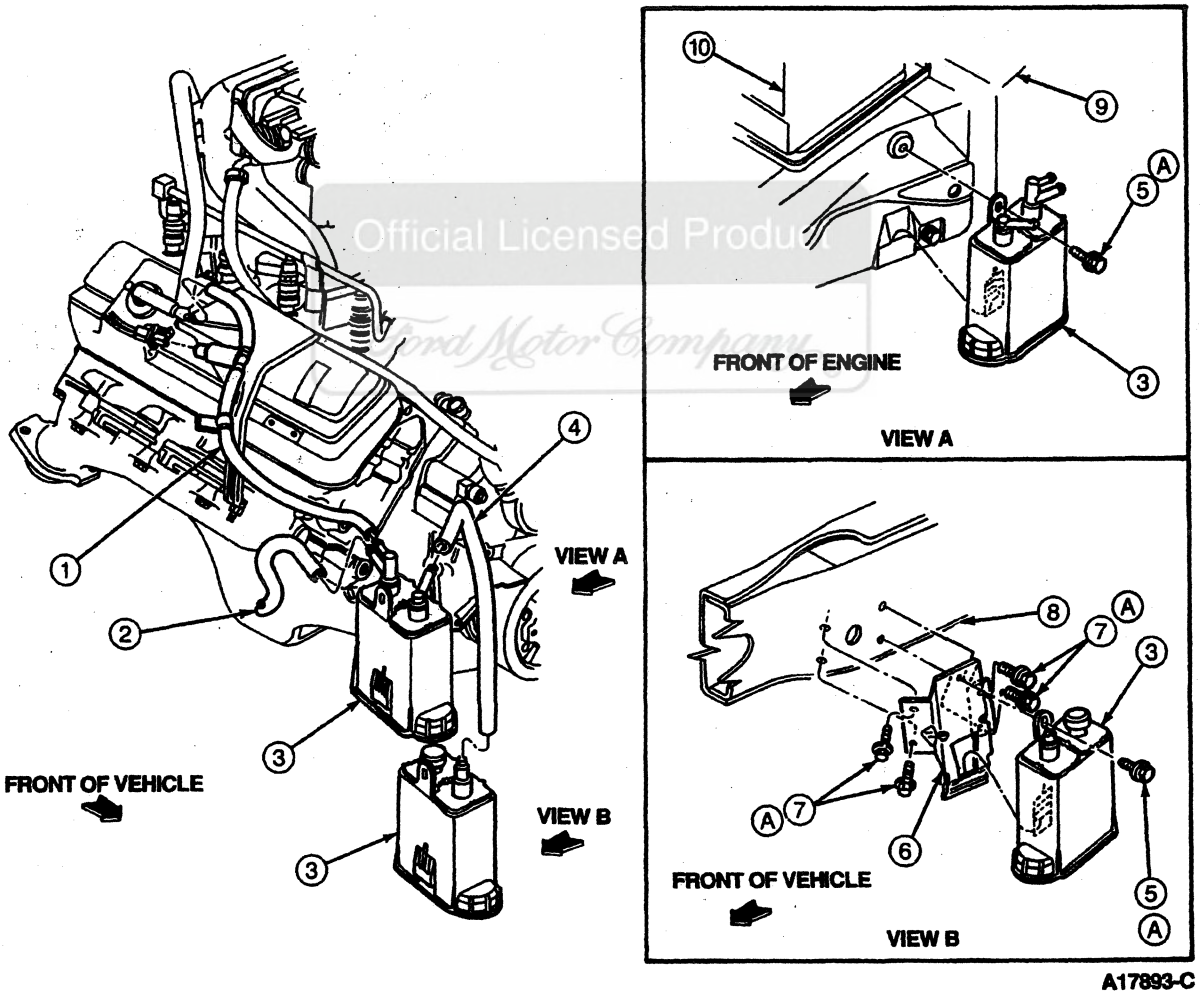

Official Licensed Product
Ford Motor Company

REMOVAL AND INSTALLATION (Continued)

Item	Part Number	Description
1	9C987	Fuel Vapor Return Hose and Valve
2	9G247	Fuel Tank Vapor Tube
3	9D653	Evaporative Emissions Canister
4	9G297	Evaporative Emission Hose
5	N800369-S2	Screw, M6.3-16.0
6	9D664	Fuel Bracket
7	W611635-S2	Screw, M8-1.25 x 20
8	5005	Frame (Reference)
9	9A220	Right Fender Apron
10	10655	Battery
A	—	Tighten to 5-7 N·m (44-62 Lb-In)

(Continued)

Evaporative Emission Canister Purge Regulator Valve

Removal

1. Disconnect wire harness from evaporative emission canister purge valve (EVAP canister purge valve)(9C915).
2. Disconnect fuel vapor hoses from evaporative emission canister purge valve and remove evaporative emission canister purge valve.

Installation

1. Follow removal procedure in reverse order.

Evaporative Emission Valve

Refer to Section 10-01A.

SPECIFICATIONS

TORQUE SPECIFICATIONS

Description	N·m	Lb-Ft	Lb-In
Fuel Vapor Canister to Fuel Bracket	5-7	—	44-62
Fuel Bracket to Frame, 4x2	5-7	—	44-62

(Continued)

TORQUE SPECIFICATIONS (Cont'd)

Description	N·m	Lb-Ft	Lb-In
Fuel Vapor Canister to Front Fender Apron	5-7	—	44-62
Fuel Bracket Bolt to Frame, 4x4	20-30	15-22	—

SPECIAL SERVICE TOOLS/EQUIPMENT

ROTUNDA EQUIPMENT

Model	Description
014-R1054	Vacuum Tester

Official Licensed Product
Ford Motor Company

SECTION 03-14 Engine Controls, Electronic

SUBJECT	PAGE
VEHICLE APPLICATION	03-14-1
DESCRIPTION AND OPERATION	
Accelerator Pedal (AP) Position Sensor	03-14-2
Barometric Pressure (BARO) Sensor	03-14-4
Camshaft Position (CMP) Sensor	03-14-6
Engine Control Systems, Electronic	03-14-1
Engine Coolant Temperature (ECT) Sensor	03-14-4
Engine Oil Temperature (EOT) Sensor	03-14-3
Exhaust Back Pressure (EBP) Sensor	03-14-4
Exhaust Back Pressure Regulator (EPR)	03-14-5
Heated Oxygen Sensor (HO2S)	03-14-6
Idle Air Control (IAC) Valve	03-14-3
Idle Validation Switch (IVS)	03-14-3
Injection Control Pressure (ICP) Sensor	03-14-5
Injection Pressure Regulator (IPR)	03-14-5
Injector Driver Module (IDM)	03-14-2
Intake Air Temperature (IAT) Sensor	03-14-3
Manifold Absolute Pressure (MAP) Sensor	03-14-4
Mass Airflow (MAF) Sensor	03-14-3
Misfire Sensor	03-14-6
Powertrain Control Module (PCM)	03-14-2
Throttle Position (TP) Sensor	03-14-2
Vehicle Speed Sensor (VSS)	03-14-6
DIAGNOSIS AND TESTING	
Engine Controls, Electronic	03-14-7
REMOVAL AND INSTALLATION	
Accelerator Pedal (AP) Position Sensor	03-14-9
Barometric Pressure (BARO) Sensor	03-14-14
Camshaft Position (CMP) Sensor	03-14-18
Engine Coolant Temperature (ECT) Sensor	03-14-12

SUBJECT	PAGE
REMOVAL AND INSTALLATION (Cont'd.)	
Engine Oil Temperature (EOT) Sensor	03-14-12
Exhaust Back Pressure (EBP) Sensor	03-14-17
Exhaust Back Pressure Regulator (EPR)	03-14-18
Heated Oxygen Sensor (HO2S)	03-14-15
Idle Air Control (IAC) Valve	03-14-11
Idle Validation Switch (IVS)	03-14-9
Injection Control Pressure (ICP) Sensor	03-14-14
Injection Control Pressure Regulator	03-14-15
Injector Driver Module (IDM)	03-14-10
Intake Air Temperature (IAT) Sensor	03-14-10
Diesel Engine	03-14-10
Gasoline Engines	03-14-10
Manifold Absolute Pressure (MAP) Sensor	03-14-13
Manifold Absolute Pressure (MAP) Sensor, Diesel Engine	03-14-13
Mass Airflow (MAF) Sensor	03-14-9
Misfire Sensor	03-14-9
Powertrain Control Module (PCM)	03-14-8
Safeguards	03-14-7
Throttle Position (TP) Sensor	03-14-8
Vehicle Speed Sensor (VSS)	03-14-18
CLEANING AND INSPECTION	
Idle Air Control Valve	03-14-19
ADJUSTMENTS	
Accelerator Pedal (AP) Position Sensor	03-14-19
Throttle Position (TP) Sensor	03-14-19
SPECIFICATIONS	03-14-19
SPECIAL SERVICE TOOLS/EQUIPMENT	03-14-19

Official Licensed Mustang Publication

VEHICLE APPLICATION

F-250 Heavy Duty, F-350, and F-Super Duty

DESCRIPTION AND OPERATION

Engine Control Systems, Electronic

WARNING: DO NOT SMOKE, CARRY LIGHTED TOBACCO, OR OPEN FLAME OF ANY TYPE WHEN WORKING ON OR NEAR ANY FUEL-RELATED COMPONENT. HIGHLY FLAMMABLE MIXTURES ARE ALWAYS PRESENT AND MAY BE IGNITED, RESULTING IN POSSIBLE PERSONAL INJURY.

Gasoline Engines

The 5.8L and 7.5L gasoline engines (6007) use the multiport fuel injection (MFI) system, which is classified as a multi-point, pulse time, speed density, fuel injection system.

Diesel Engine

The 7.3L diesel engine is classified as a multi-point, pulse time, speed density fuel injection system.

To maintain the required exhaust emission levels, the fuel metering system must be in proper operating condition and adjusted to the specifications listed in / on the following sources:

- The applicable section of the 1996 Powertrain Control / Emissions Diagnosis Manual.[1]
- The applicable section of this Group.
- The Vehicle Emission Control Information (VECI) decal.

Additional engine performance checks are required to keep the exhaust emissions at the specified minimum pollutant level.

Always refer to the Master Parts List for parts usage and interchangeability before replacing any emissions-related components.

1 Can be purchased as a separate item.

DESCRIPTION AND OPERATION (Continued)

Always refer to the Master Parts List for parts usage and interchangeability before replacing a throttle body (9E926) or any component part of a throttle body.

Powertrain Control Module (PCM)

The powertrain control module (PCM)(12A650) receives inputs from various engine sensors to compute the required fuel flow rate necessary to maintain a proper air / fuel ratio throughout the entire engine operational range.

The powertrain control module also determines and compensates the vehicle's uniqueness. The system will also compensate for changes in altitude (i.e., from sea level to mountains).

Gasoline Engines

The gasoline powered vehicle is equipped with the EEC-IV system and uses a 60-pin powertrain control module (49-state). California uses the EEC-V and a 104-pin powertrain control module.

Diesel Engine

The diesel powered vehicle is equipped with the 104-pin EEC-V system powertrain control module which outputs a command to the injector driver module (IDM) which in turn energizes the fuel injector with up to 115V DC. The fuel injector is controlled by the injector driver module (IDM) to meter the appropriate quantity of fuel at the correct time and duration.

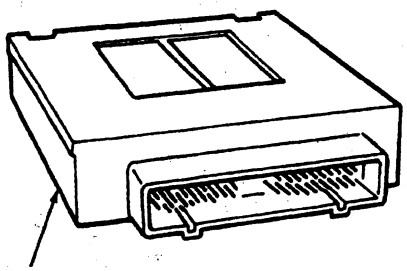

A20789-A

Throttle Position (TP) Sensor

Gasoline Engines

The throttle position sensor (TP sensor)(9B989) is a potentiometer that provides a signal to the powertrain control module (PCM)(12A650) proportional to the throttle plate position. The throttle position sensor connects to the throttle plate shaft.

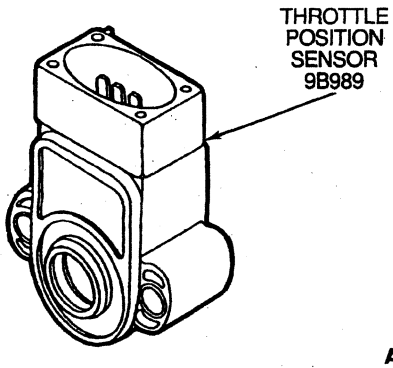

A20790-C

Injector Driver Module (IDM)

Diesel Engine

The injector driver module (IDM) supplies 115V DC to all of the fuel injectors.

The injector driver module (IDM) receives signals from the powertrain control module (PCM)(12A650) for cylinder identification and fuel delivery command signal (FDCS). The powertrain control module controls when the timing of the injectors should start and how long the injector is open.

The IDM controls the injector firing sequence through output drivers. The IDM has an output driver for each injector: one low side driver for each injector and one high side driver for each bank of injectors. The injector is fired when the output driver closes the circuit to ground, completing the circuit ground path.

Accelerator Pedal (AP) Position Sensor

Diesel Engine

The accelerator pedal (AP) position sensor is a potentiometer that provides a signal to the powertrain control module (PCM)(12A650) proportional to the accelerator pedal position. The accelerator pedal (AP) position sensor connects to the accelerator pedal shaft.

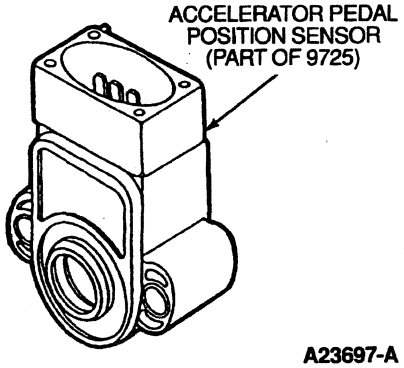

A23697-A

DESCRIPTION AND OPERATION (Continued)

Idle Validation Switch (IVS)

Diesel Engine

The idle validation switch (IVS) provides the powertrain control module (PCM)(12A650) with a redundant signal to verify when the accelerator pedal and shaft is in the idle position. Any detected malfunction of the idle validation switch (IVS) will illuminate the Check Engine light and the engine (6007) will operate at low idle only.

Mass Airflow (MAF) Sensor

Gasoline Engines

The mass air flow sensor (MAF sensor)(12B579) is located between the engine air cleaner (ACL)(9600) and the throttle body (9E926). The mass air flow sensor uses a hot wire sensing element to measure the amount of air entering the engine (6007). Air passing over the hot wire causes it to cool. The mass air flow sensor then outputs an analog voltage signal to the powertrain control module (PCM)(12A650) to determine the intake air mass. The powertrain control module will calculate the required fuel injector pulse width in order to provide the desired air / fuel ratio.

The mass airflow sensor electronics module body element and housing are calibrated as a unit and must be serviced as a complete assembly.

CAUTION: Sensing elements located in the mass airflow sensor should not be tampered with or cleaned.

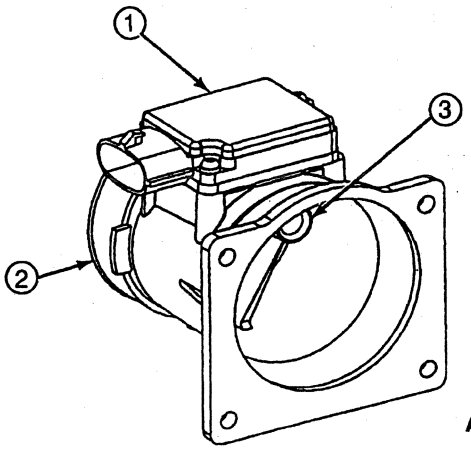

A24037-A

Item	Part Number	Description
1	—	MAFS Electronics Module (Part of 12B579)
2	—	MAFS Body (Part of 12B579)
3	—	Airflow Bypass (Part of 12B579)

Intake Air Temperature (IAT) Sensor

Gasoline and Diesel Engines

The intake air temperature sensor (IAT sensor)(12A697) changes resistance in response to changing intake air temperature. The IAT sensor resistance decreases as the air temperature increases, providing a signal to the powertrain control module (PCM)(12A650) indicating temperature of the incoming intake air. The IAT sensor is installed in the lower intake manifold (9424) (49-state). On California vehicles, the intake air temperature sensor is located in the air inlet tube between the air cleaner assembly and the throttle body (9E926).

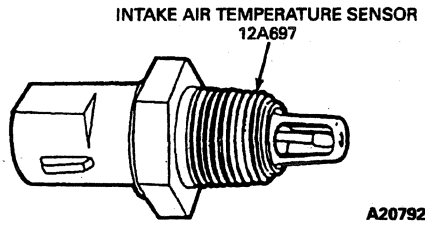

A20792-A

Engine Oil Temperature (EOT) Sensor

Diesel Engine

The engine oil temperature (EOT) sensor changes resistance in response to changing temperature of the engine oil. The engine oil temperature sensor resistance decreases as the engine oil temperature increases providing a signal to the powertrain control module (PCM)(12A650), indicating the temperature of the engine oil.

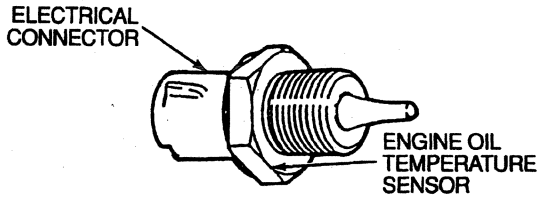

A23692-A

Idle Air Control (IAC) Valve

Gasoline Engines

The idle air control valve (IAC valve)(9F715) is used to control engine idle speed and dashpot functions. The idle air control valve is mounted on the throttle body (9E926) and allows air to bypass the throttle plate. The amount of air allowed to bypass the throttle plate, will be determined by the powertrain control module (PCM)(12A650) and will be controlled by a duty cycle signal.

Unlicensed Product Ford Motor Company

DESCRIPTION AND OPERATION (Continued)

Idle Air Control Valve Assembly

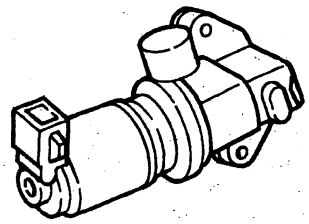

DA0479-A

Engine Coolant Temperature (ECT) Sensor

Gasoline Engines

The engine coolant temperature sensor (ECT sensor)(12A648) changes resistance in response to changing temperature of the engine coolant. The engine coolant temperature sensor resistance decreases as the engine coolant temperature increases providing a signal to the powertrain control module (PCM)(12A650) indicating the temperature of the engine coolant.

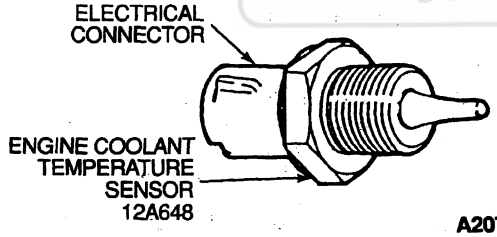

A20793-B

Manifold Absolute Pressure (MAP) Sensor

Gasoline and Diesel Engines

The manifold absolute pressure sensor (MAP sensor)(9F479) is used on some applications. The MAP sensor measures the pressure in the intake manifold (9424) and provides this information as a variable frequency signal to the powertrain control module (PCM)(12A650). With the ignition switch in the KEY ON / ENGINE OFF position, the manifold absolute pressure sensor will indicate the barometric pressure in the intake manifold. The MAP sensor is used to indicate boost pressure on the diesel engine.

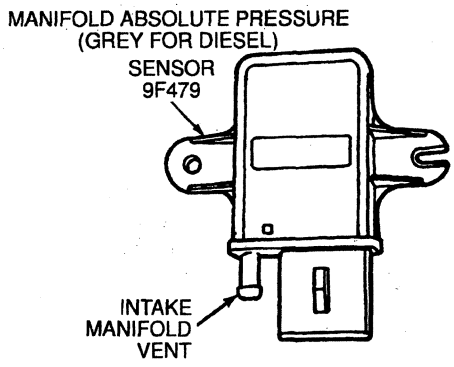

A20794-B

Barometric Pressure (BARO) Sensor

Diesel Engine

The barometric pressure sensor (BARO sensor)(12A644) is a variable capacitance sensor that, when supplied with a 5-volt reference signal from the powertrain control module (PCM)(12A650), produces an analog voltage that indicates barometric pressure. The sensor signal is used to determine altitude to adjust timing and quantity of fuel to optimize engine operation. The output of the barometric pressure sensor is one of the variables used to calculate glow plug on time.

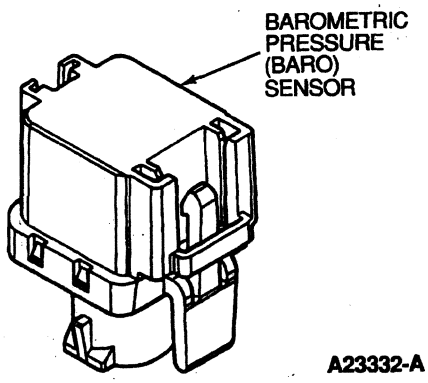

A23332-A

Exhaust Back Pressure (EBP) Sensor

Diesel Engine

The exhaust back pressure (EBP) sensor is a variable capacitance sensor that, when supplied with a 5 volt reference signal from the powertrain control module (PCM)(12A650), produces a linear analog voltage signal that indicates exhaust back pressure.

DESCRIPTION AND OPERATION (Continued)

The powertrain control module uses this signal to control the exhaust back pressure device when needed.

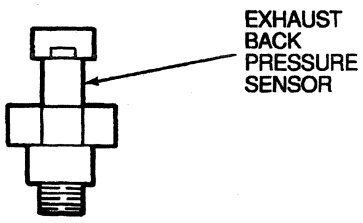

A22285-A

Exhaust Back Pressure Regulator (EPR)

Diesel Engine

The exhaust back pressure regulator (EPR) is a variable-position valve that controls exhaust back pressure during cold ambient temperatures to decrease the amount of time required to warm up the engine. The powertrain control module (PCM)(12A650) uses the measured exhaust back pressure, ambient air temperature and engine oil temperature to determine the desired exhaust back pressure.

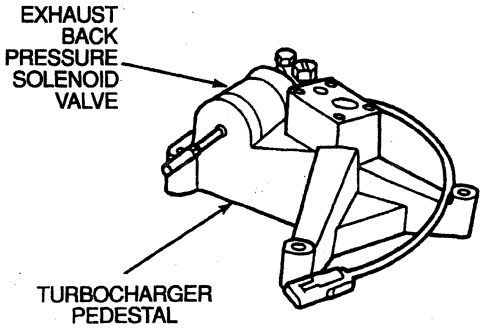

A22288-B

Injection Control Pressure (ICP) Sensor

Diesel Engine

The injection control pressure (ICP) sensor is a variable capacitance sensor that, when supplied with a 5-volt reference signal from the powertrain control module (PCM)(12A650), produces a linear analog voltage signal that indicates oil pressure. The ICP sensor provides a feedback signal to indicate high pressure oil so that the powertrain control module can command the correct injector timing, pulse width and injection control pressure for proper fuel delivery at all speed and load conditions.

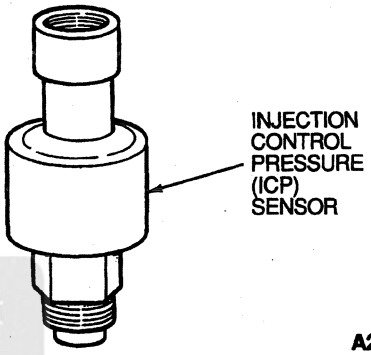

A22286-A

Injection Pressure Regulator (IPR)

Diesel Engine

The injection pressure regulator (IPR) is a variable-position valve that controls injection control pressure. Battery voltage is supplied to the injection pressure regulator when the ignition switch is in the ON position. Valve position is controlled by switching the output signal circuit to ground inside the powertrain control module (PCM)(12A650). Injection pressure is controlled by the powertrain control module based on inputs from intake air temperature, engine oil temperature, manifold and barometric pressure, and accelerator pedal position.

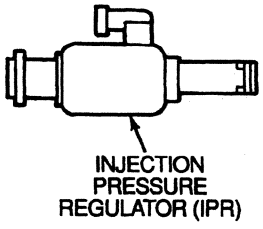

A22289-A

Licensed Product
Ford Motor Company

DESCRIPTION AND OPERATION (Continued)

Heated Oxygen Sensor (HO2S)

Gasoline Engines

The heated oxygen sensors (HO2S)(9F472) react with the oxygen in the exhaust gases and will generate a voltage. A low voltage indicates too much oxygen or a lean condition. A high voltage indicates not enough oxygen or a rich condition. The location and number of heated oxygen sensors will vary with engine size and vehicle application. Refer to the Removal and Installation portion of this section for illustrations showing oxygen sensor installation views.

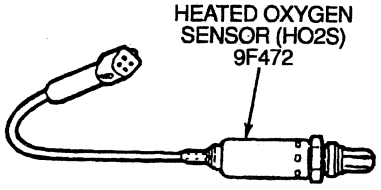

A20795-B

Camshaft Position (CMP) Sensor

Diesel Engine

The camshaft position sensor (CMP sensor) is a Hall-effect sensor that generates a digital frequency while windows in a target wheel pass through its magnetic field. The frequency of the windows passing by the sensor, as well as the width of selected windows, allows the powertrain control module (PCM)(12A650) (PCM) to detect engine speed and position.

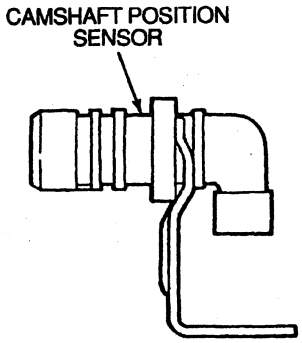

A23333-A

Vehicle Speed Sensor (VSS)

Diesel Engine

The vehicle speed sensor (VSS)(9E731) is mounted on the front of the rear axle housing above the pinion flange. The speed sensor ring is located in the rear axle housing (4010) between the ring gear and differential case. The signal from the vehicle speed sensor is not routed directly to the powertrain control module (PCM)(12A650). It is received by the programmable speedometer/odometer module (PSOM), which provides the powertrain control module with a vehicle speed signal.

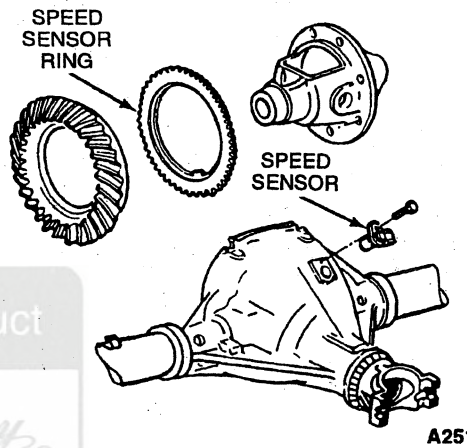

A25127-A

Misfire Sensor

The misfire sensor is an electromagnetic inductance coil similar in operation to a camshaft or crankshaft position sensor. A four-point stator, or pulse ring, located behind the crankshaft damper generates an electrical impulse in the sensor at each 90 degrees of rotation. The powertrain control module (PCM)(12A650) monitors the sensor pulses and flags any misfire events. When a specified number of misfires occur within a certain time frame, the powertrain control module will alert the driver to the condition by turning on the malfunction indicator light (MIL).

Official Licensed Product

DESCRIPTION AND OPERATION (Continued)

NOTE: Misfire sensor is not required on 49-state / Canada 7.5L engine. It is required on a 7.5L California engine.

Installation View, Misfire Sensor and Pulse Ring

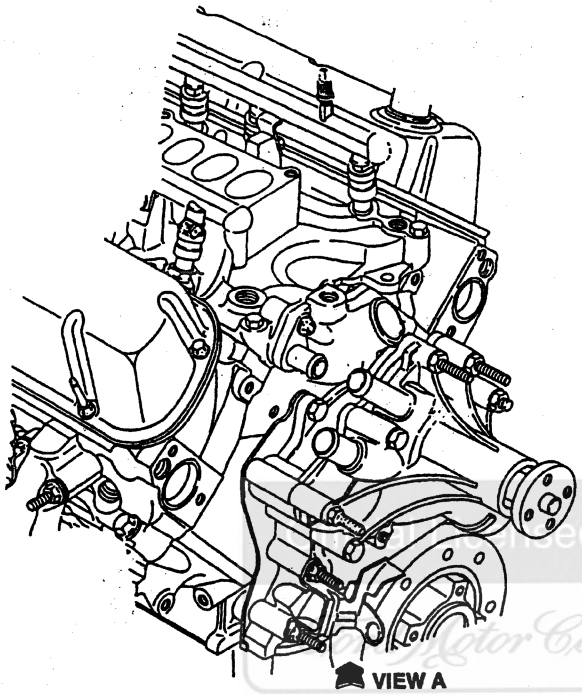

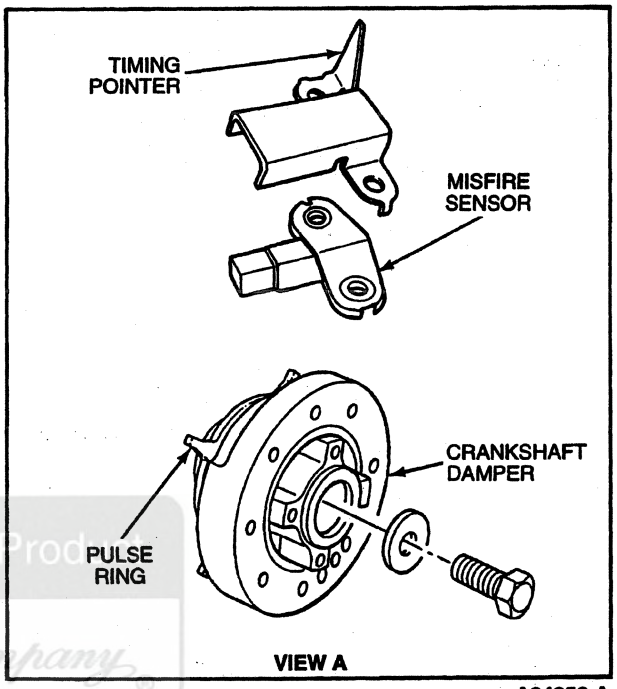

DIAGNOSIS AND TESTING

Engine Controls, Electronic

Gasoline Engines (EEC-IV)

Refer to the 1996 Powertrain Control / Emissions Diagnosis Manual[2] for detailed diagnosis and testing procedures.

Diesel Engine (EEC-V)

WARNING: RED-STRIPED WIRES CARRY 115 V DC. SEVERE ELECTRICAL SHOCK CAN BE RECEIVED. DO NOT PIERCE.

CAUTION: Do not pierce engine electrical wires or damage to the harness can occur.

Refer to the 1996 Powertrain Control / Emissions Diagnosis Manual.[2]

REMOVAL AND INSTALLATION

Safeguards

1. NOTE: When the battery (10655) has been disconnected and reconnected, some abnormal drive symptoms may occur while the powertrain control module (PCM)(12A650) relearns its adaptive strategy. The vehicle may need to be driven 16 km (10 miles) or more to relearn the strategy.

   Always disconnect the battery cable prior to service or replacement of any electronic engine controls.
2. Follow Diagnostic Procedures as outlined in the Powertrain Control / Emissions Diagnosis Manual.[2]
3. Disconnect electronic engine controls from wire harness before measuring for continuity, resistance or energizing with a B+ source.
4. Never measure voltage or resistance directly at the powertrain control module.

2 Can be purchased as a separate item.

REMOVAL AND INSTALLATION (Continued)

Powertrain Control Module (PCM)

Gasoline and Diesel Engines

Removal

1. NOTE: Refer to Electrical and Vacuum Troubleshooting Manual (EVTM) for location of powertrain control module (PCM)(12A650) in specific vehicle.

   NOTE: When the battery (10655) has been disconnected and reconnected, some abnormal drive symptoms may occur while the powertrain control module relearns its adaptive strategy. The vehicle may need to be driven 16 km (10 miles) or more to relearn the strategy.

   Disconnect battery negative cable.
2. Loosen engine control sensor wiring (12A581) to PCM connector retainer bolt.
3. Remove engine control sensor wiring connector from powertrain control module.
4. Remove the two powertrain control module seal nuts and loosen left fender liner screws and remove liner or bend down to clear powertrain control module. Remove powertrain control module.

Installation

1. Follow removal procedure in reverse order.
2. Tighten powertrain control module retainer nuts to 3-4 N·m (27-35 lb-in). Tighten engine control sensor wiring connector retainer bolt to 4 N·m (35 lb-in).

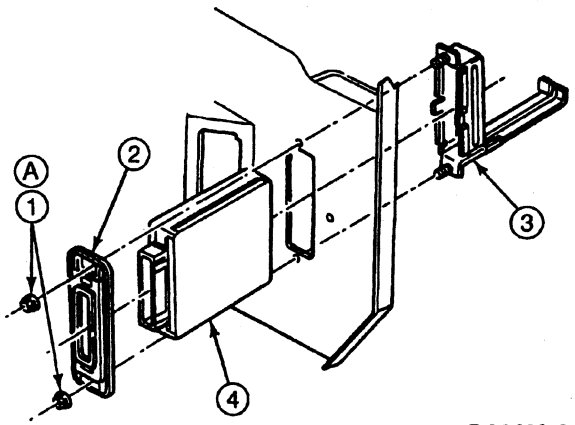

DA0480-A

Item	Part Number	Description
1	N621905-S2	Nut and Washer
2	12B523	Cover
3	12A692	Bracket
4	12A650	Powertrain Control Module
A	—	Tighten to 3-4 N·m (27-35 Lb-In)

Throttle Position (TP) Sensor

Removal

1. Disconnect battery negative cable.
2. On 5.8L engine, remove throttle body. Refer to Section 03-04A.
3. Disconnect throttle position sensor (TP sensor)(9B989) from wiring harness.

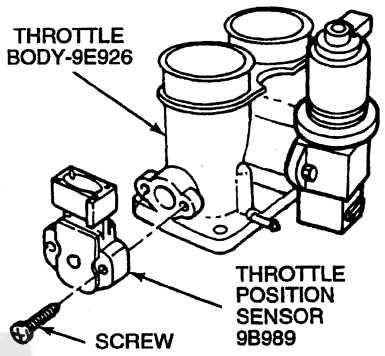

DA0481-B

4. If reusing throttle position sensor, scribe alignment marks to position when reinstalling.
5. Remove two retaining screws.
6. Remove throttle position sensor.

Installation

1. **CAUTION: Slide rotary tangs into position over throttle shaft blade, then rotate throttle position sensor CLOCKWISE ONLY to installed position. Failure to install the throttle position sensor in this manner may result in excessive idle speeds on 5.8L engine.**

   On the 5.8L engine (6007), position the throttle position sensor so that the pigtail points toward the idle air control valve (IAC valve)(9F715).
2. NOTE: When throttle position sensor is installed on the throttle body (9E926), the connector will point toward the throttle body inlet on 7.5L engine only.

   Secure throttle position sensor to throttle body with two retaining screws. Tighten to 1.2-1.8 N·m (11-16 lb-in).
3. On 5.8L engines, install throttle body. Refer to Section 03-04A.
4. Connect electrical connector to harness.
5. NOTE: When the battery (10655) has been disconnected and reconnected, some abnormal drive symptoms may occur while the powertrain control module (PCM)(12A650) relearns its adaptive strategy. The vehicle may need to be driven 16 km (10 miles) or more to relearn the strategy.

   Reconnect battery negative cable.

Official Licensed Product

REMOVAL AND INSTALLATION (Continued)

Misfire Sensor

Removal

1. NOTE: When the battery (10655) has been disconnected and reconnected, some abnormal drive symptoms may occur while the powertrain control module (PCM)(12A650) relearns its adaptive strategy. The vehicle may need to be driven 16 km (10 miles) or more to relearn the strategy.

   Disconnect battery negative cable.
2. Remove retaining screws and timing pointer.
3. Disconnect wiring and remove misfire sensor.

Installation

1. Follow removal procedure in reverse order.
2. Tighten retaining screws to 8-12 N·m (71-106 lb-in).

Accelerator Pedal (AP) Position Sensor

Diesel Engine

The accelerator pedal (AP) position sensor is not serviced separately. Replace accelerator pedal and shaft assembly if AP position sensor requires service. Refer to Section 10-02.

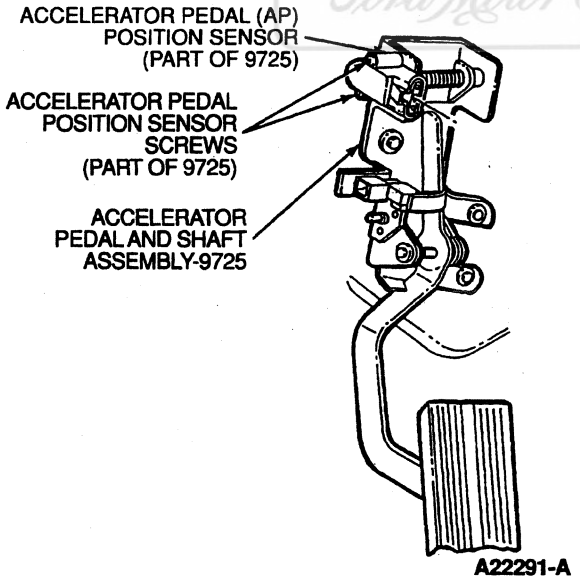

Idle Validation Switch (IVS)

Diesel Engine

The idle validation switch (IVS) is not serviced separately. Replace accelerator pedal and shaft if idle validation switch requires service. Refer to Section 10-02.

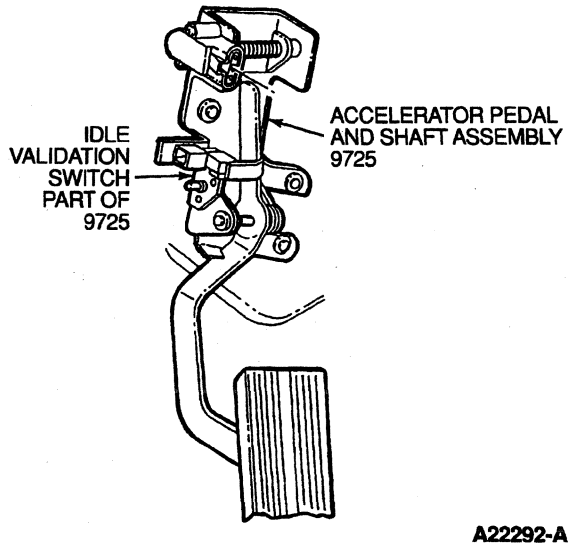

Mass Airflow (MAF) Sensor

Gasoline Engines

The mass air flow sensor (MAF sensor)(12B579) is located between the engine air cleaner (ACL)(9600) and the throttle body (9E926).

The MAF sensor electronics module element and housing are calibrated as a unit and must be serviced as a complete unit.

Removal

CAUTION: Sensing elements located in the mass air flow sensor must not be probed or cleaned.

1. NOTE: When the battery (10655) has been disconnected and reconnected, some abnormal drive symptoms may occur while the powertrain control module (PCM)(12A650) relearns its adaptive strategy. The vehicle may need to be driven 16 km (10 miles) or more to relearn the strategy.

   Disconnect battery negative cable.
2. Disconnect air tube at sensor.
3. Disconnect wiring at sensor.
4. Remove four retaining nuts and sensor.
5. Remove gasket.

Installation

1. Follow removal procedure in reverse order.

Ford Motor Company Licensed Product

REMOVAL AND INSTALLATION (Continued)

Injector Driver Module (IDM)

Diesel Engine

Removal

1. **WARNING: RED-STRIPED WIRES CARRY 115 V DC. SEVERE ELECTRICAL SHOCK CAN BE RECEIVED. DO NOT PIERCE.**

   CAUTION: Do not pierce engine electrical wires or damage to the harness can occur.

   Disconnect battery negative cable.
2. Remove module bolts.
3. Loosen wiring connector retainer bolt.
4. Remove injector driver module.

Installation

1. Follow removal procedure in reverse order.
2. Tighten IDM retainer bolt to 3-4 N·m (27-35 lb-in).

Intake Air Temperature (IAT) Sensor

Gasoline Engines

Removal

1. Disconnect battery negative cable.
2. Disconnect wire harness from intake air temperature sensor (IAT sensor)(12A697).
3. Remove intake air temperature sensor from intake manifold (9424) (49-state). On California vehicles, the intake air temperature sensor is located in the air inlet tube between the engine air cleaner (ACL)(9600) assembly and the throttle body (9E926).

Installation

1. NOTE: When the battery (10655) has been disconnected and reconnected, some abnormal drive symptoms may occur while the powertrain control module (PCM)(12A650) relearns its adaptive strategy. The vehicle may need to be driven 16 km (10 miles) or more to relearn the strategy.

   Follow removal procedure in reverse order.
2. Tighten intake air temperature sensor to 16-24 N·m (12-17 lb-ft).

Intake Air Temperature (IAT) Sensor — Gasoline Engines

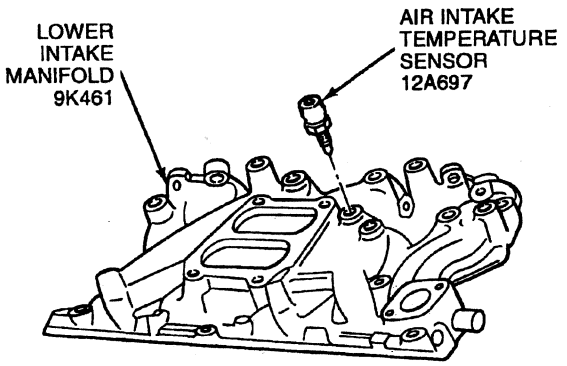

DA0482-A

Diesel Engine

Removal

1. Disconnect negative battery cable.
2. Disconnect wire harness from intake air temperature sensor.
3. Remove intake air temperature sensor from air cleaner housing.

Installation

1. NOTE: When the battery has been disconnected and reconnected, some abnormal drive symptoms may occur while the powertrain control module relearns its adaptive strategy. The vehicle may need to be driven 16 km (10 miles) or more to relearn the strategy.

   Follow removal procedure in reverse order.
2. Tighten intake air temperature sensor sensor to 16-24 N·m (12-17 lb-ft).

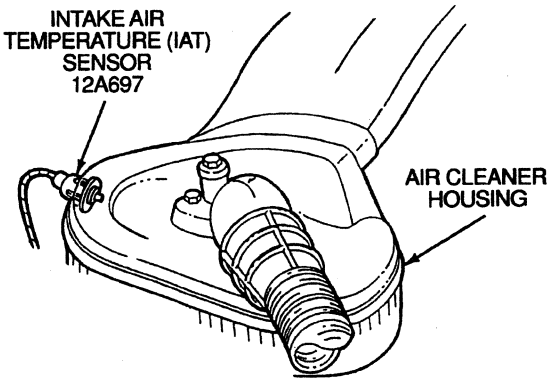

A22293-A

Official Licensed Product Ford Motor Company

REMOVAL AND INSTALLATION (Continued)

Idle Air Control (IAC) Valve

Gasoline Engines

Removal

1. Disconnect negative battery cable.
2. Disconnect the idle air control valve assembly connector from the wiring harness.
3. Remove the two idle air control valve retaining bolts.

Idle Air Control (IAC) Valve — Gasoline Engines

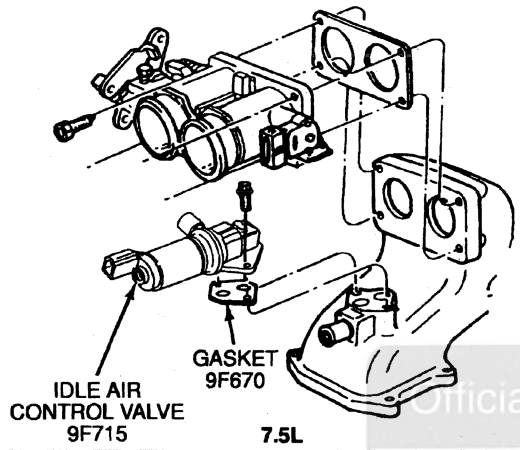

7.5L

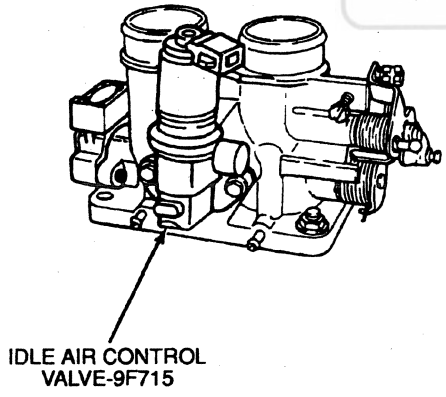

5.8L

DA0483-A

4. Remove the idle air control valve (IAC valve)(9F715) and gasket.

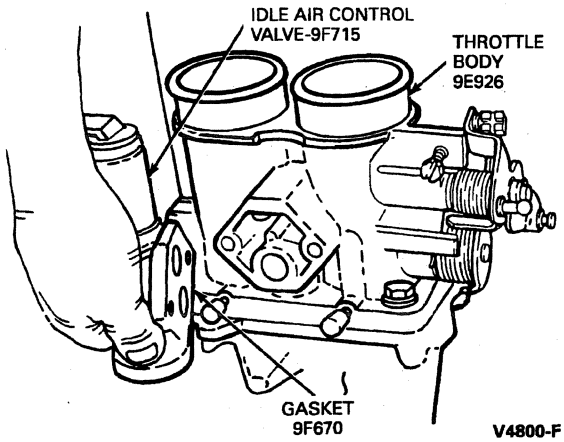

V4800-F

Installation

1. NOTE: If scraping is necessary, be careful not to damage sealing areas of idle air control valve or throttle body gasket surfaces, or drop material into throttle body (9E926), or intake manifold (9424).

   Make sure that both throttle body and idle air control valve gasket surfaces are clean.
2. Install gasket and idle air control valve on throttle body or intake manifold surfaces.

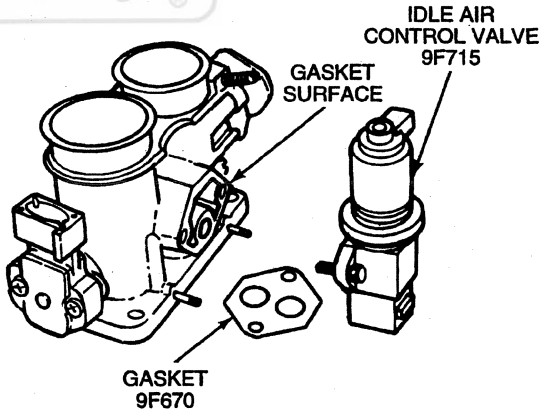

DA0981-A

Official Licensed Data
Ford Motor Company

REMOVAL AND INSTALLATION (Continued)

3. Install retaining screws. Tighten to 9.5 N·m (84 lb-in).

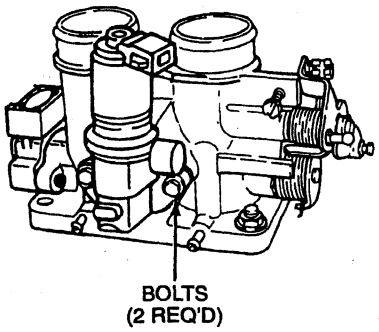

DA0982-A

4. Connect electrical connector for the idle air control valve.
5. NOTE: When the battery (10655) has been disconnected and reconnected, some abnormal drive symptoms occur while the powertrain control module (PCM)(12A650) relearns its adaptive strategy. The vehicle may need to be driven 16 km (10 miles) or more to relearn the strategy.

   Reconnect negative battery cable.

Engine Coolant Temperature (ECT) Sensor

Gasoline Engines

Removal

1. Partially drain cooling system. Refer to Section 03-03.
2. Disconnect battery negative cable.
3. On 5.8L, remove air inlet tube.
4. Disconnect wiring from engine coolant temperature sensor (ECT sensor)(12A648).
5. Remove engine coolant temperature sensor from intake manifold (9424) or heater water hose (18472).

Installation

1. NOTE: When the battery (10655) has been disconnected and reconnected, some abnormal drive symptoms may occur while the powertrain control module (PCM)(12A650) relearns its adaptive strategy. The vehicle may need to be driven 16 km (10 miles) or more to relearn the strategy.

   Follow removal procedure in reverse order.
2. Tighten engine coolant temperature sensor to 13-20 N·m (10-15 lb-ft).
3. Refill cooling system. Refer to Section 03-03.

Engine Coolant Temperature (ECT) Sensor — Gasoline Engines

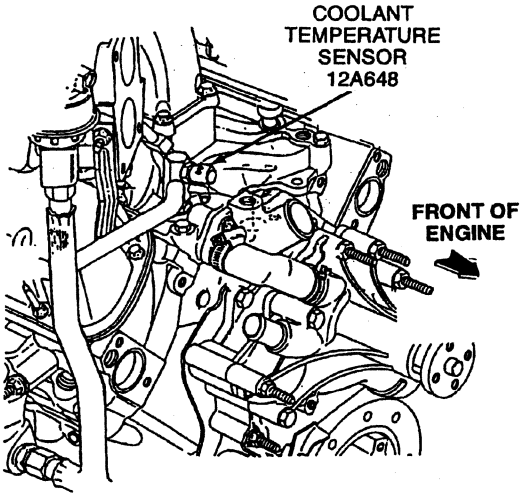

5.8L

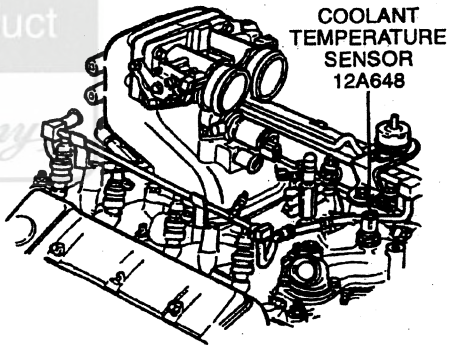

7.5L

DA0484-A

Engine Oil Temperature (EOT) Sensor

Diesel Engine

Removal

1. Disconnect engine oil temperature sensor electrical connector.
2. NOTE: Approximately 0.94 liters (one quart) of engine oil must be removed prior to sensor removal.

   Remove one quart of engine oil from high pressure oil pump reservoir using Rotunda Vacuum Tester 014-R1058 or equivalent.

Official Licensed Product
Ford Motor Company

REMOVAL AND INSTALLATION (Continued)

3. Remove engine oil temperature sensor.

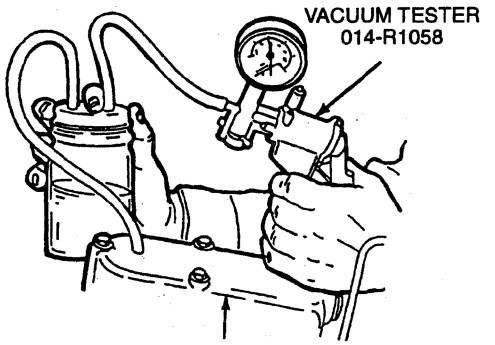

V9568-C

Installation

1. Install engine oil temperature sensor.
2. Connect engine oil temperature sensor electrical connector.
3. Fill engine oil to proper level.
4. Refill oil pump reservoir with engine oil.

Official Licensed Product
Ford Motor Company

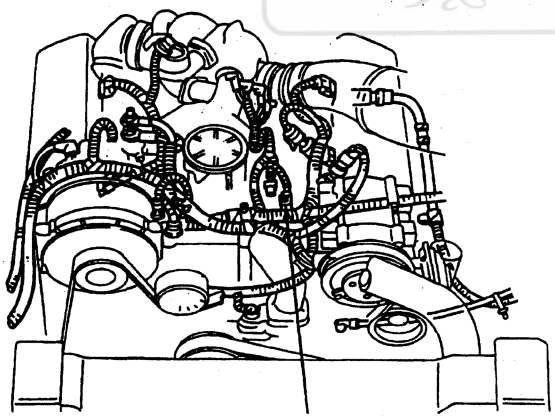

A23335-A

Manifold Absolute Pressure (MAP) Sensor

Removal

1. Disconnect battery negative cable.
2. NOTE: Manifold absolute pressure sensor (MAP sensor)(9F479) is not used on engines with a mass air flow sensor (MAF sensor)(12B579).

   Disconnect vacuum source from manifold absolute pressure sensor.
3. Remove fasteners attaching manifold absolute pressure sensor and bracket assembly below cowl drip rail.
4. Remove MAP sensor fasteners on the air conditioning evaporator case.

Installation

1. NOTE: When the battery (10655) has been disconnected and reconnected, some abnormal drive symptoms may occur while the powertrain control module (PCM)(12A650) relearns its adaptive strategy. The vehicle may need to be driven 16 km (10 miles) or more to relearn the strategy.

   Follow removal procedure in reverse order.

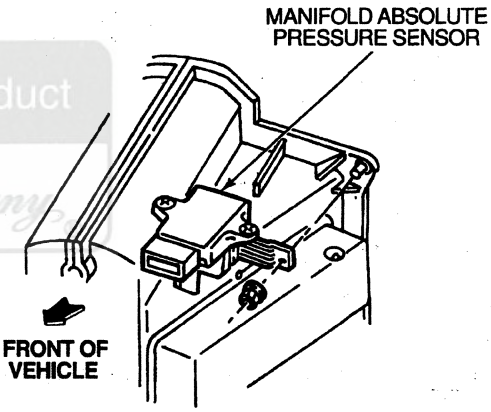

A21336-B

Manifold Absolute Pressure (MAP) Sensor, Diesel Engine

Removal

1. Disconnect battery ground cable.
2. Disconnect vacuum hose from manifold absolute pressure sensor (MAP sensor)(9F479).
3. Remove fasteners attaching manifold absolute pressure sensor and bracket assembly below cowl drip rail.

REMOVAL AND INSTALLATION (Continued)

Installation

1. NOTE: When the battery (10655) has been disconnected and reconnected, some abnormal drive symptoms may occur while the powertrain control module (PCM)(12A650) relearns its adaptive strategy. The vehicle may need to be driven 16 km (10 miles) or more to relearn the strategy.

   Follow removal procedure in reverse order.

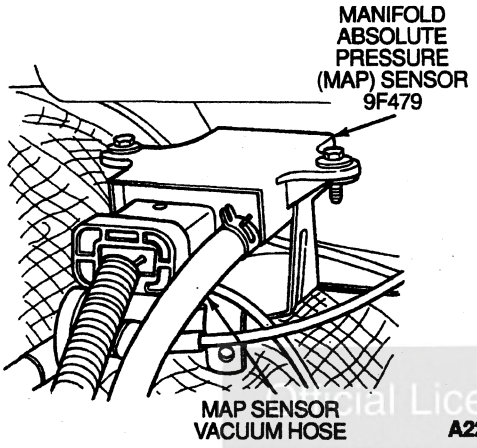

Official Licensed Product
Ford Motor Company

Barometric Pressure (BARO) Sensor

Diesel Engine

Removal

1. Disconnect barometric pressure sensor electrical connector.
2. Remove barometric pressure sensor (BARO sensor)(12A644).

Installation

1. Install barometric pressure sensor.
2. Connect sensor electrical connector.

Injection Control Pressure (ICP) Sensor

Diesel Engine

Removal

1. Disconnect injection control pressure sensor electrical connector.

REMOVAL AND INSTALLATION (Continued)

2. Remove injection control pressure sensor.

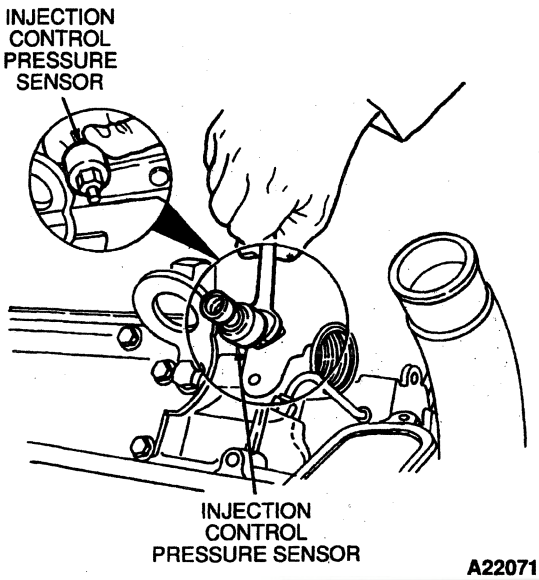

A22071-A

Installation

1. Install injection control pressure sensor.
2. Connect sensor electrical connector.

Injection Control Pressure Regulator

Diesel Engine

Removal

1. Remove fuel filter / fuel heater / water separator assembly. Refer to Section 10-01B.
2. Disconnect injection control pressure regulator electrical connector.
3. Remove solenoid retaining nut and remove solenoid.
4. Remove injection control pressure regulator.

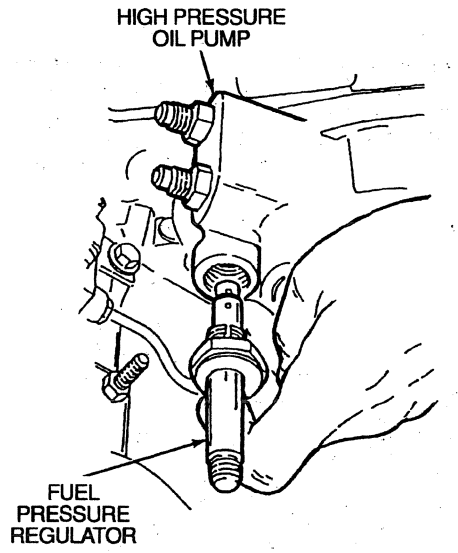

V9570-B

Installation

1. Install injection control pressure regulator. Tighten to 47 N·m (35 lb-ft).
2. Install solenoid and solenoid retaining nut. Tighten to 6 N·m (53 lb-in).
3. Connect regulator electrical connector.
4. Install fuel filter / fuel heater / water separator assembly.

Heated Oxygen Sensor (HO2S)

Gasoline Engines

SPECIAL SERVICE TOOL(S) REQUIRED

Description	Tool Number
Oxygen Sensor Wrench	T94P-9472-A

Removal

1. Raise vehicle.
2. Disconnect battery negative cable.
3. Disconnect the heated oxygen sensor electrical connector.
4. Remove the heated oxygen sensor (HO2S)(9F472) from the exhaust pipe using Oxygen Sensor Wrench T94P-9472-A.

Installation

1. NOTE: When the battery (10655) has been disconnected and reconnected, some abnormal drive symptoms may occur while the powertrain control module (PCM)(12A650) relearns its adaptive strategy. The vehicle may need to be driven 16 km (10 miles) or more to relearn the strategy.

   Follow removal procedure in reverse order.

Official Licensed Product Ford Motor Company

REMOVAL AND INSTALLATION (Continued)

2. Tighten heated oxygen sensor to 36-46 N·m (27-34 lb-ft).

Heated Oxygen Sensor — 7.5L, 49-State

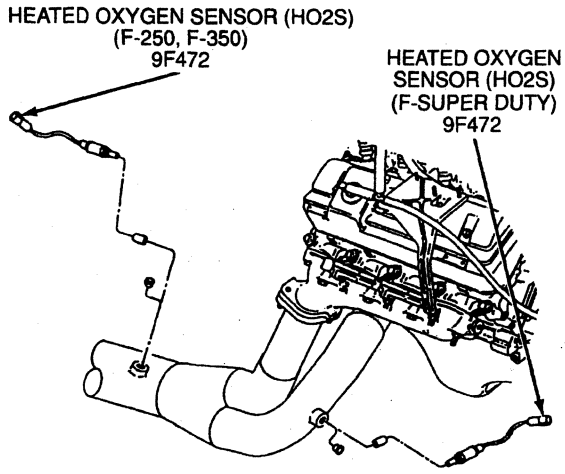

Official Licensed Product
Ford Motor Company

7.5L California Only

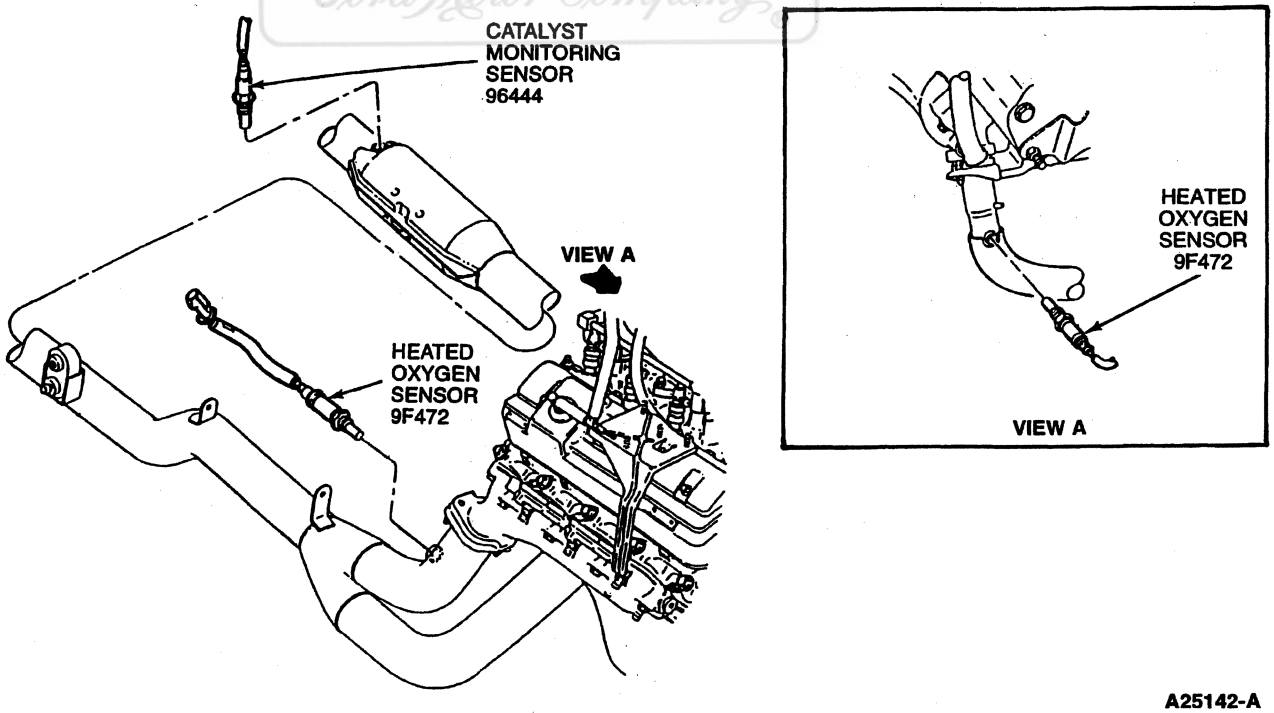

REMOVAL AND INSTALLATION (Continued)

Heated Oxygen Sensor — 5.8L Engine

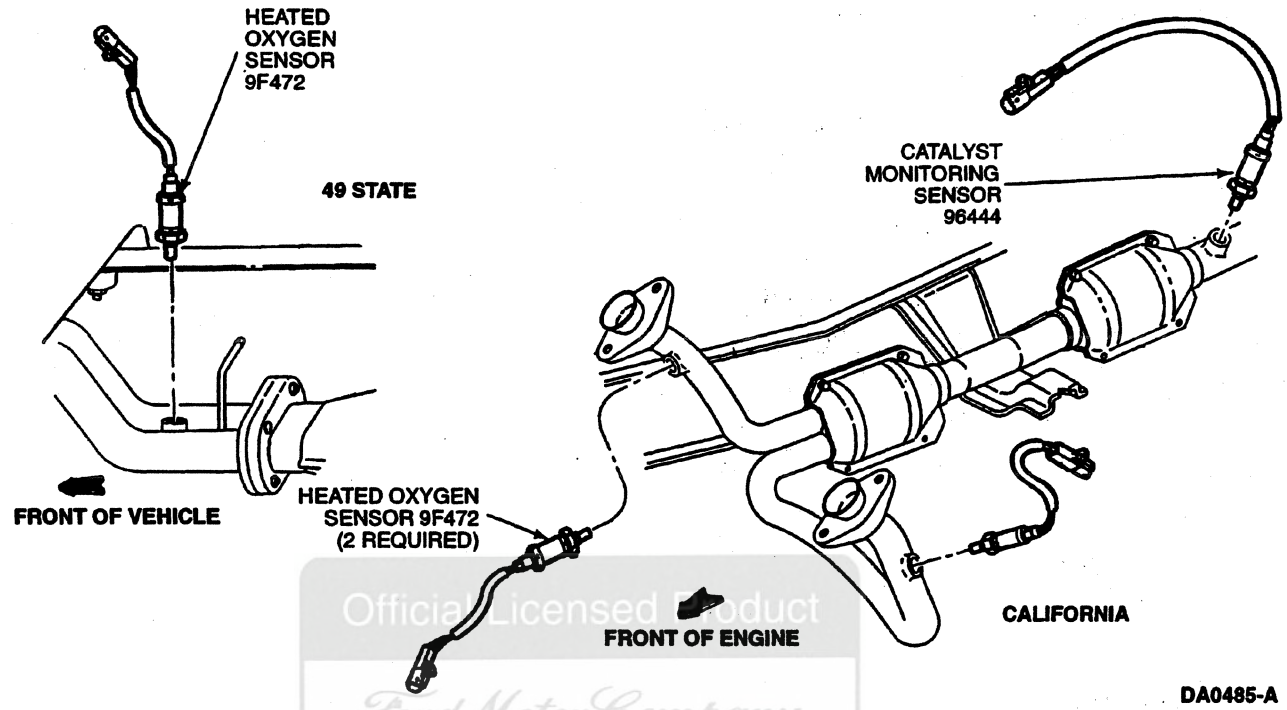

Official Licensed Product
Ford Motor Company

Exhaust Back Pressure (EBP) Sensor

Diesel Engine

Removal

1. Disconnect exhaust back pressure sensor electrical connector.
2. Remove exhaust back pressure sensor.

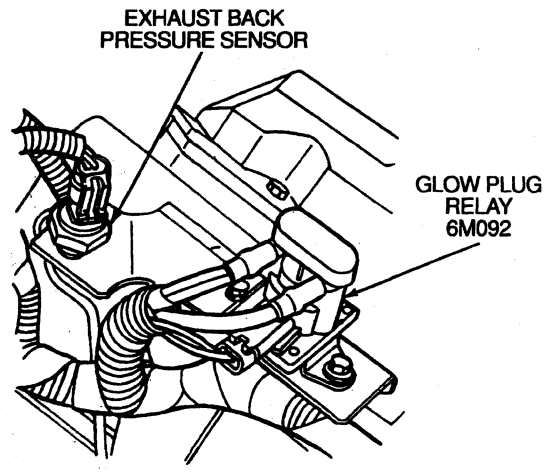

Installation

1. Install exhaust back pressure sensor.
2. Connect sensor electrical connector.

REMOVAL AND INSTALLATION (Continued)

Exhaust Back Pressure Regulator (EPR)

Diesel Engine

Refer to Section 03-04D

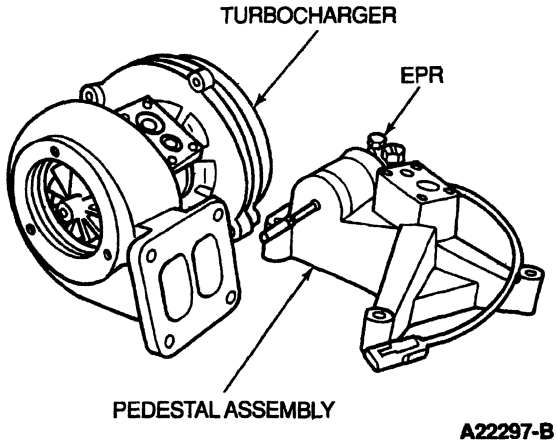

Camshaft Position (CMP) Sensor

Diesel Engine

Removal

1 Disconnect camshaft position sensor electrical connector
2 Remove bolt and camshaft position sensor

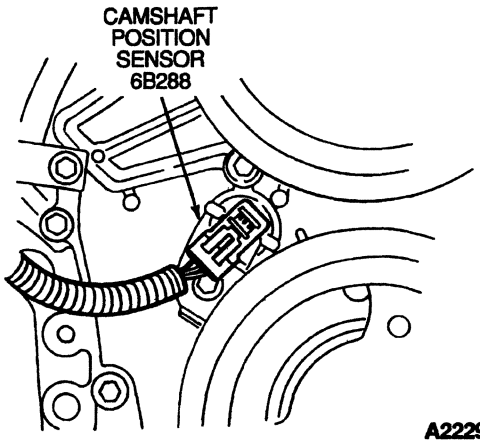

Installation

1 Install CMP sensor and bolt
2 Connect CMP sensor electrical connector

Vehicle Speed Sensor (VSS)

Removal

1 Disconnect the wiring harness connector from the vehicle speed sensor (VSS)(9E731)
2 Remove the vehicle speed sensor retaining bolt
3 Remove the vehicle speed sensor from the rear axle housing (4010)

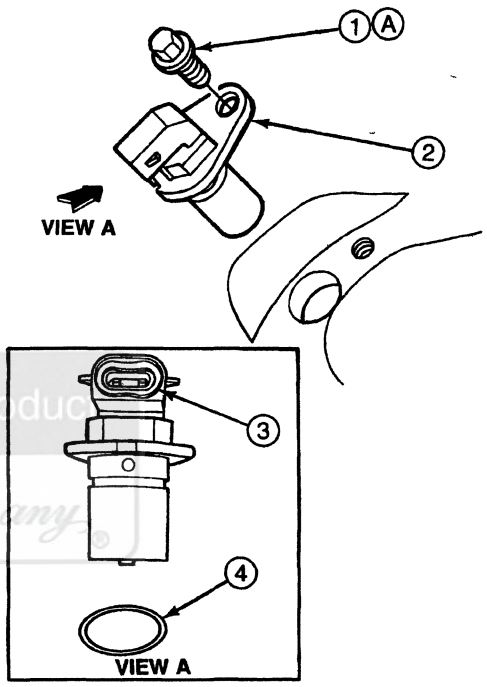

Item	Part Number	Description
1	390356	Bolt
2	9E731	Vehicle Speed Sensor
3	—	Connector Seal (Part of 2L373)
4	NBR017	O-Ring
A	—	Tighten to 34-40 N m (25-30 Lb-Ft)

Installation

1 NOTE Clean the axle mounting surface thoroughly Use care to prevent dirt from entering the rear axle housing

Inspect and clean the magnetized vehicle speed sensor pole piece and make sure it is free from loose metal particles that could cause erratic system operation

2 Replace the vehicle speed sensor O-ring

Ford Motor Company Licensed Product

REMOVAL AND INSTALLATION (Continued)

3. NOTE: Do not apply pressure to the plastic electrical connector while mounting the vehicle speed sensor.

   Lightly lubricate the vehicle speed sensor O-ring with clean motor oil and insert into the rear axle housing mounting hole until it is properly seated. The vehicle speed sensor flange should slide to the mounting surface and make sure the air gap setting is between 0.127-1.14 mm (0.005-0.045 inches).
4. Install the vehicle speed sensor retaining bolt and tighten to 34-40 N·m (25-30 lb-ft).
5. Connect the vehicle speed sensor electrical connector.

CLEANING AND INSPECTION

Idle Air Control Valve

Gasoline Engines

The idle air control valve cannot be cleaned. Service by replacing the control valve.

ADJUSTMENTS

Throttle Position (TP) Sensor

Gasoline Engines

The throttle position sensor (TP sensor)(9B989) cannot be adjusted. The throttle position sensor must be replaced if servicing is required.

Accelerator Pedal (AP) Position Sensor

Diesel Engine

The accelerator pedal (AP) position sensor cannot be adjusted. If service is required, replace accelerator pedal and shaft.

SPECIFICATIONS

TORQUE SPECIFICATIONS

Description	N·m	Lb-Ft	Lb-In
Idle Air Control Valve to Throttle Body	9.5	—	84
Throttle Position Sensor to Throttle Body, 7.5L	2-3	—	18-27
Throttle Position Sensor to Throttle Body, 5.8L	1.2-1.8	11-16	—

(Continued)

TORQUE SPECIFICATIONS (Cont'd)

Description	N·m	Lb-Ft	Lb-In
IAT Sensor	16-24	12-17	—
ECT Sensor	13-20	10-15	—
HO2S-to-Converter	36-46	27-34	—
Engine Control Sensor Wiring Connector-to-PCM	4	—	35
PCM Retainer Nuts	3-4	—	27-35
Misfire Sensor Retaining Screw	8-12	—	71-106
IDM Retainer Bolt	3-4	—	27-35
Injection Control Pressure Regulator	47	35	—
Solenoid Retaining Nut	6	—	53
Knock Sensor	20-27	15-20	—
Vehicle Speed Sensor Retaining Bolt	34-40	25-30	—

LUBRICANT/ADHESIVE/CLEANER SPECIFICATIONS

Description	Part Number	Ford Specification
Carburetor Tune-Up Cleaner	D9AZ-19579-AA or -BA	ESB-M14P9-A

Official Licensed Reprint
Ford Motor Company

SPECIAL SERVICE TOOLS/EQUIPMENT

SPECIAL SERVICE TOOLS REQUIRED

Tool Number/ Description	Illustration
T94P-9472-A Oxygen Sensor Wrench	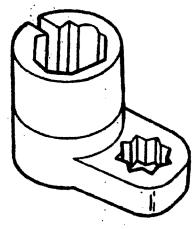 T94P-9472-A

ROTUNDA EQUIPMENT

Model	Description
014-R1058	Vacuum Tester
164-R3750	Fuel Injector Tester/Cleaner
164-R3756	Air Bypass Valve Actuator

GROUP

DRIVELINE 05

SECTION TITLE	PAGE
AXLE AND DRIVESHAFT, SERVICE	05-00-1
AXLE, FRONT DRIVE, DANA MODEL 50	05-03A-1
AXLE, FRONT DRIVE, DANA MODEL 60 MONOBEAM	05-03B-1
AXLE, REAR, DANA	05-02C-1
DIFFERENTIAL, DANA MODEL 80 LOCKING AXLE	05-02E-1
DIFFERENTIAL, LIMITED SLIP, FORD 10.25-INCH RING GEAR	05-02B-1
DRIVESHAFT	05-01-1
WHEEL HUBS AND BEARINGS, REAR, DANA FULL-FLOATING AXLE	05-02D-1
WHEEL HUBS AND BEARINGS, REAR, FORD FULL-FLOATING AXLE	05-02A-1
WHEEL HUBS AND BEARINGS, FRONT WHEELS, 4-WHEEL DRIVE	05-03C-1

SECTION 05-00 Axle and Driveshaft, Service

Official Licensed Product
Ford Motor Company

SUBJECT	PAGE
VEHICLE APPLICATION	05-00-2
DESCRIPTION AND OPERATION	
Axle Identification Tag	05-00-2
Brake System, Anti-Lock, Rear	05-00-5
Driveshaft, Front	05-00-3
Driveshaft, Rear	05-00-3
Driving Axle, Front	05-00-5
Driving Axle, Rear	05-00-5
DIAGNOSIS AND TESTING	
Component Tests	05-00-23
Driveline Vibration	05-00-23
Gear Tooth Contact Pattern Check	05-00-28
Limited Slip Differential	05-00-26
Universal Joint Flange Runout Check, Rear Axle	05-00-26
Inspection and Verification	05-00-5
Alignment Inspection, Rear Axle and Suspension	05-00-6
Analysis of Gear Noise	05-00-17
Analysis of Inoperative Conditions	05-00-19
Axle Lockup	05-00-20
Broken Axle Shaft	05-00-19
Broken Welds	05-00-20
Wheel Bearing Malfunctions	05-00-20
Analysis of Leakage	05-00-10
Analysis of Vibration	05-00-11
Axle Noise	05-00-16
Bearing Rumble	05-00-19
Noise Acceptability	05-00-7
Preliminary Diagnosis	05-00-7
U-Joint Inspection	05-00-6
Symptom Chart	05-00-20
CLEANING AND INSPECTION	
Inspection After Disassembly of the Axle	05-00-31
Anti-Lock Speed Sensor Ring	05-00-31
CLEANING AND INSPECTION (Cont'd.)	
Bearing Cups and Cone and Roller Assemblies	05-00-31
Differential Case	05-00-31
Differential Housing	05-00-31
Gears	05-00-31
Limited Slip Differential Parts	05-00-31
Rear Brake Anti-Lock Sensor	05-00-31
Universal Joint Flange, Rear Axle	05-00-31
Wheel Bearing and Seal	05-00-31
Inspection Before Disassembly of Axle	05-00-30
Axle Backlash Check	05-00-30
ADJUSTMENTS	
Axles	05-00-32
Driveline Angle Correction	05-00-32
Coupling Shaft Angle Adjustment	05-00-32
Driveshaft and Pinion Angle Adjustment	05-00-32
Engine Angle Adjustments	05-00-33
Driveline Support Plate Position, Adjustable	05-00-32
Driveshaft Alignment	05-00-32
Driveshaft Runout and Balance	05-00-33
Alternate Procedure	05-00-34
Pinion and Ring Gear Adjustment	05-00-35
Slip Yoke Spline	05-00-36
U-Joint Phasing	05-00-32
LUBRICATION	
Axle Lubrication, Rear	05-00-36
Draining and Filling	05-00-37
Slip Yoke	05-00-37
U-Joints	05-00-37
SPECIFICATIONS	05-00-37
SPECIAL SERVICE TOOLS/EQUIPMENT	05-00-43

VEHICLE APPLICATION

F-250 Heavy Duty and F-350 4x2 and 4x4, F-Super Duty

DESCRIPTION AND OPERATION

Axle Identification Tag

Location of the axle identification code on the rating plate (certification label) is shown in the following illustration. The first two digits of the axle code (located in the right lower corner of the plate) are rear axle identifiers. The third digit identifies a front axle. Refer to Section 00-01 for a complete listing of the axle codes.

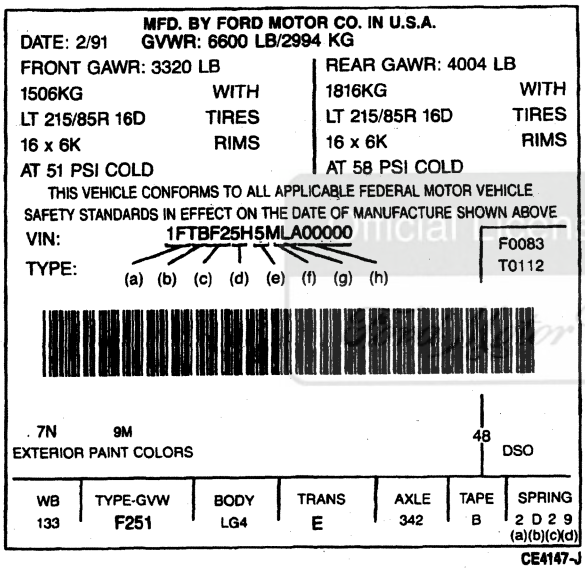

CE4147-J

The front axle identification tag is a bar code label on the rear facing surface of the axle support arm, passenger side on F-250 Heavy Duty 4x4. For F-350, the label is located on the axle tube.

Rear axles (4001) have a metal tag secured under adjacent axle housing cover bolt heads listing Ford and Dana part numbers and the ratio. Front drive axles have a similar tag.

The plant code on the axle identification tag is to be used as the official service identifier.

Ford Axle Identification Tag

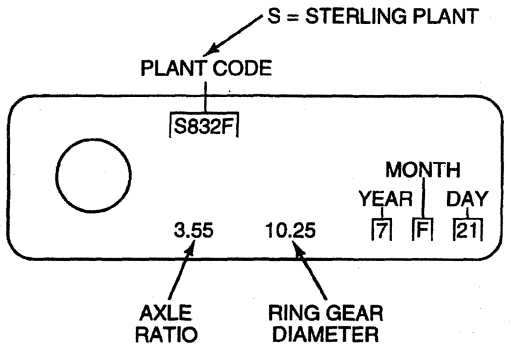

DE0494-A

The plant code for an axle denotes a particular design and specific ratio, and if it is a conventional or limited slip type. In addition, the plant code will not change as long as that particular axle assembly never undergoes an external design change. If, however, an internal design change takes place during the production life of the axle and that internal change affects service parts interchangeability, a dash and numerical suffix will be added to the plant code.

Note that plant codes in the illustrations are identical, but the tag below shows a numeric. This means that as an assembly both axles are interchangeable; however, internally they are different. Therefore, each would require different internal service parts at service time.

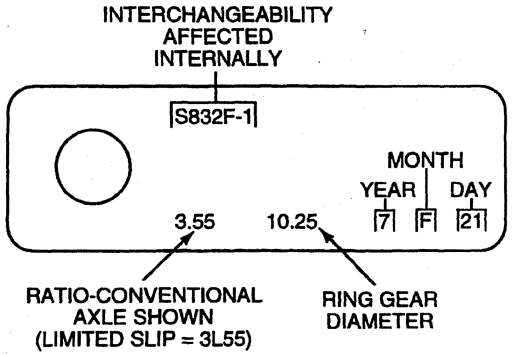

DE0495-A

DESCRIPTION AND OPERATION (Continued)

Dana Axle Identification Tag

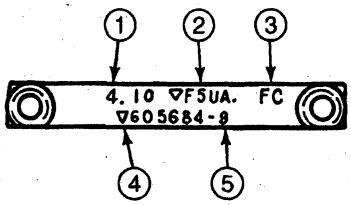

DE0287-A

Item	Part Number	Description
1	—	Axle Ratio (Part of 4001)
2	—	Axle Assy Number (Prefix Letters) (Part of 4001)
3	—	Axle Assy Number (Suffix Letters) (Part of 4001)
4	—	Dana Part Number (Part of 4001)
5	—	Included on Limited-Slip Only (Part of 4001)

Driveshaft, Front

The front driveshaft connects the power flow from the transfer case to the front drive axle. It incorporates two single Cardan universal joints, a splined stub shaft end, a universal joint slip yoke boot (4421) with two clamps (one large and one small), and a driveshaft slip yoke (4841) that attaches to the transfer case. F-350 4x4 vehicles incorporate a double Cardan universal joint in the front driveshaft.

CAUTION: Under no circumstances is the driveshaft (4602) to be clamped in the jaws of a vise or similar holding fixture. Denting or localized fracture of the tube can result, which could cause driveshaft failure during vehicle operation.

NOTE: Whenever the vehicle is raised on a hoist, inspect the universal joint slip yoke boot for rips or tears. Replace if required.

Driveshaft, Rear

The rear driveshaft (4602) or coupling shaft is composed of the universal joints, connecting shafts, attaching flanges, and slip-yokes. The number of shafts and universal joints used depends on the vehicle application.

Driveshaft Assembly

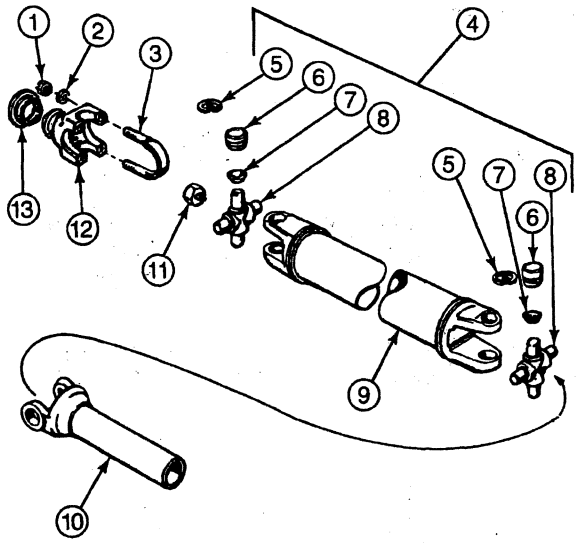

DE0235-A

Item	Part Number	Description
1	382836-S100	Nut
2	34806-S2	Lockwasher
3	386867-S	U-Bolt
4	4635	Universal Joint
5	—	Snap Rings (Part of 4635)
6	—	Bearing (Part of 4635)
7	—	Seal (Part of 4635)
8	—	Spider (Part of 4635)
9	4602	Driveshaft
10	4841	Driveshaft Slip Yoke
11	375646-S2	Nut
12	4851	Rear Axle Companion Flange
13	4859	Drive Pinion Oil Seal Deflector

Ford Motor Company Licensed Product

DESCRIPTION AND OPERATION (Continued)

Slip Yoke Designs

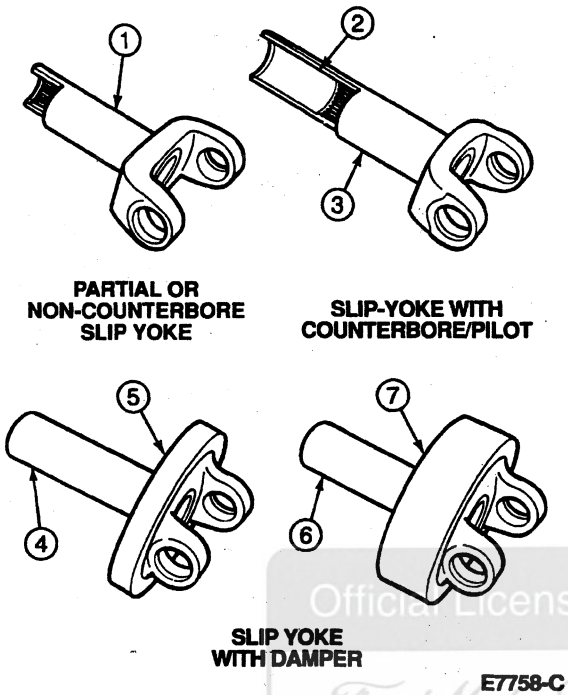

Item	Part Number	Description
1	4841	Driveshaft Slip Yoke, Non-Counterbore
2	—	Counterbore/Pilot (Part of 4841)
3	4841	Driveshaft Slip Yoke, Counterbore/Pilot
4	4841	Driveshaft Slip Yoke, Low Inertia
5	—	Damper (Part of 4841)
6	4841	Driveshaft Slip Yoke, High Inertia
7	—	Damper (Part of 4841)

Some vehicles use a one-piece steel or aluminum slip-yoke type driveshaft. A universal joint and splined driveshaft slip yoke (4841) are located at the transmission end of the shaft, where they are held in alignment by a bushing in the extension housing (7A039). The splined driveshaft slip yoke and transmission output shaft allow fore and aft movement of the driveshaft as the rear axle (4001) moves up and down with the rear suspension. This provides smooth performance during vehicle operation. An oil seal at the transmission (7003) prevents leakage and protects the driveshaft slip yoke from dust, dirt and other harmful material. A rear universal joint attached by either two U-bolts or two straps and four nuts is used where the driveshaft mates with the rear axle universal joint flange (4851) at the rear axle.

Others use a coupling shaft in conjunction with a driveshaft. Care must be taken to align the driveshafts as shown in the illustrations. The two-piece driveline system incorporates a "necked down" coupling shaft stub with a blind spline feature, which ensures positive phasing action (except F-Super Duty Motorhome Chassis).

All two-piece driveline vehicles are equipped with driveshaft center bearing supports (4800) that are prelubricated and sealed for the bearing life.

All universal joints are of the lubed-for-life needle-bearing type except F-Super Duty Stripped Chassis which have lubrication fittings. Replacement universal joints equipped with grease fittings should be lubricated at the maintenance schedule booklet. The universal joint bearings are retained on the spiders by snap rings and U-bolts on some applications.

The driveshafts are balanced; therefore, if the vehicle is being undercoated, the driveshafts and all open spline areas must be covered to prevent undercoating material from getting on the driveshafts.

Two types of driveshaft connecting joints are available on different vehicles:

- single Cardan universal joint
- double Cardan universal joint

The F-350 4x4 rear driveshaft is of the double Cardan type which incorporates two universal joints, a driveshaft centering socket yoke (4782), and a driveshaft center yoke (4784) at the transfer case end of each shaft. A single universal joint is used at the axle end of the driveshaft.

Official Licensed Reproduction Ford Motor Company

DESCRIPTION AND OPERATION (Continued)

Rear Driveshaft and Coupling Shaft, F-350 4x4

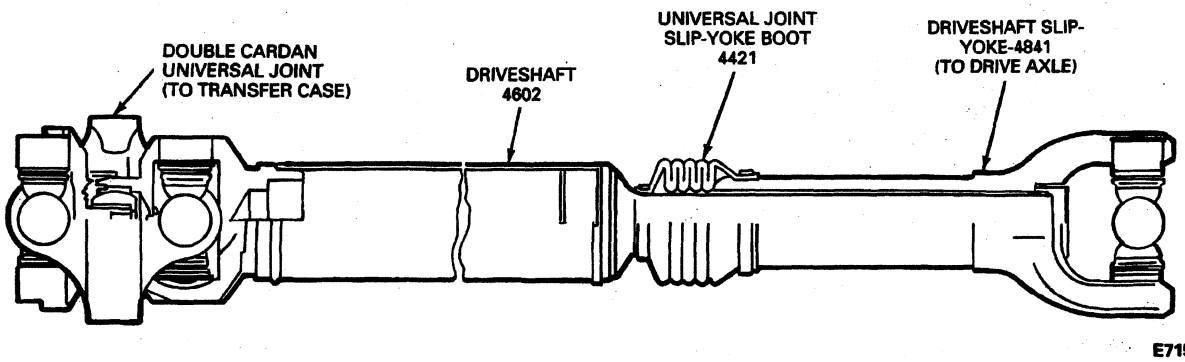

Driving Axle, Front

Two front axles are available:

- F-250 Heavy Duty: Dana Model 50
- F-350 4x4: Dana Model 60 monobeam

Driving Axle, Rear

Two rear axles (4001) are available:

- F-Super Duty: Dana Model 80 11.25-inch
- F-250 Heavy Duty, F-350: Ford 10.25-inch ring gear

Driving Axle (Rear on 2WD and Front and Rear on 4WD)

The axle drive pinion receives its power from the engine (6007) through the transmission (7003) on 2WD and through the transfer case on 4WD vehicles. The hypoid pinion gear rotates the differential case (4204) through engagement with the ring gear, which is bolted to the case outer flange. Inside the differential case, two differential pinion gears (4215) are mounted on the differential pinion shaft (4211), which is pinned with a lock bolt to the differential case. These pinion gears are engaged with the differential side gears (4236) to which the axle shafts (4234) are splined. Therefore, as the differential case turns, it rotates the axle shafts and wheels. When it is necessary for one wheel and axle shaft to rotate faster than the other, the faster turning side gear causes the differential pinions to roll on the slower turning differential side gear to allow differential action between the two axle shafts.

Brake System, Anti-Lock, Rear

F-Series vehicles (except F-Super Duty) use the rear anti-lock brake system (RABS), which uses the rear axle-mounted rear brake anti-lock sensor.

The system features an anti-lock speed sensor ring that is pressed on the differential case (4204) behind the ring gear and pinion. If the anti-lock speed sensor ring is removed, it must be discarded and replaced with a new one. The anti-lock speed sensor ring works in conjunction with a rear brake anti-lock sensor. This rear brake anti-lock sensor is retained in a bore at the top of the carrier housing and fastened by one bolt. There is a space provided between the ring gear and pinion and anti-lock speed sensor ring for measuring the ring gear and pinion backface runout. For anti-lock speed sensor ring removal and installation procedures, refer to the appropriate rear axle section in Group 05.

F-Super Duty Motorhome vehicles do not incorporate the rear brake anti-lock sensor and anti-lock speed sensor ring.

All other F-Super Duty vehicles incorporate the rear brake anti-lock sensor and anti-lock speed sensor ring as a signal generator, not for a RABS system. The signal is used for the speedometer system along with other vehicle systems that require a road speed signal.

For a detailed description of RABS, refer to Section 06-09 in the Body, Chassis Manual.

DIAGNOSIS AND TESTING

Inspection and Verification

Certain rear axle (4001) and driveline trouble symptoms are also common to the engine (6007), transmission (7003), rear wheel bearings (1225), tires and other parts of the vehicle. For this reason, make sure the cause of the trouble is in the rear axle before adjusting, servicing or replacing any of its parts. Refer to Diagnosis and Testing in Section 00-04 in the Body, Chassis Manual.

Certain trouble symptoms can be caused by limited slip differentials. Check the Vehicle Certification Label and axle ratio tag to determine the type of differential.

DIAGNOSIS AND TESTING (Continued)

U-Joint Inspection

Prior to checking driveline angularity, inspect the universal joints for proper operation

Place the vehicle on a frame hoist and rotate the driveshaft (4602) by hand Check for rough operation or seized universal joints If the universal joint shows signs of seizure, excessive wear or improper seating, scribe alignment marks on the driveshaft and rear axle companion flange Remove the driveshaft and remove and replace the universal joint Install the driveshaft in the marked original position

Alignment Inspection, Rear Axle and Suspension

1 Raise the vehicle on a hoist to allow the rear axle to be suspended freely

2 Using white chalk or paint, mark a small area at the center of each rear tire and scribe a vertical line on it

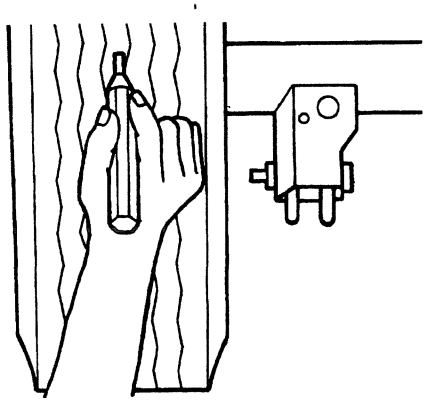

E6007-B

3 Adjust both wheels so that the markings face the front of the vehicle Using a tape measure, measure the distance between scribe marks and record this reading (front reading)

Front Reading

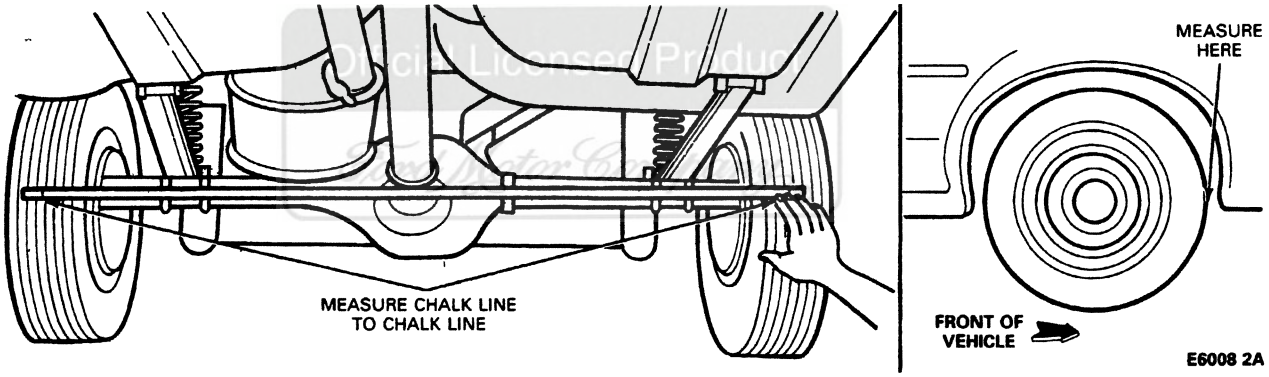

E6008 2A

4 Rotate the rear wheels so the markings are directly underneath the vehicle Measure the distance between the scribe marks and record this reading (bottom reading)

Bottom Reading

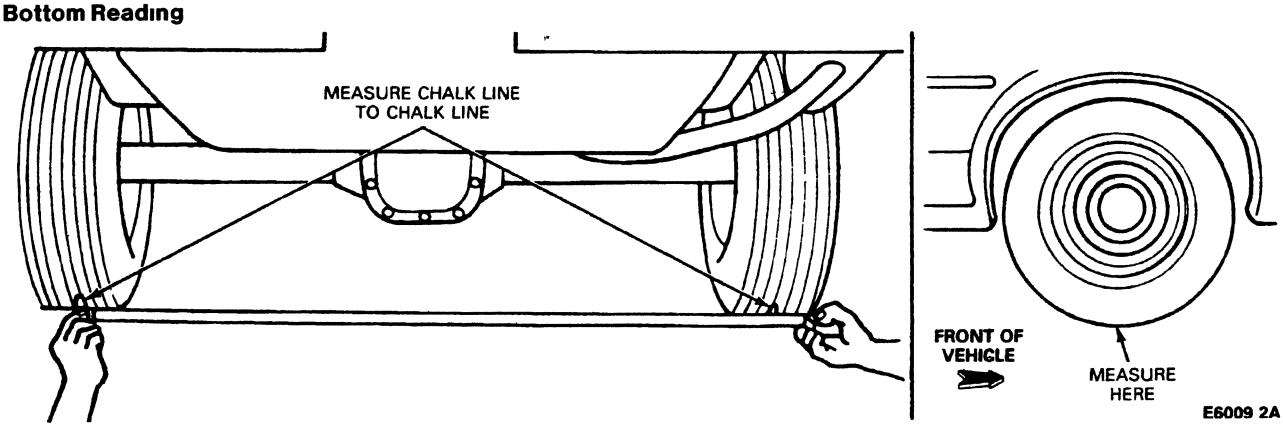

E6009 2A

DIAGNOSIS AND TESTING (Continued)

5 Rotate the rear wheels so the markings face the rear of the vehicle Again, measure and record the distance between scribe marks (rear reading)

Rear Reading

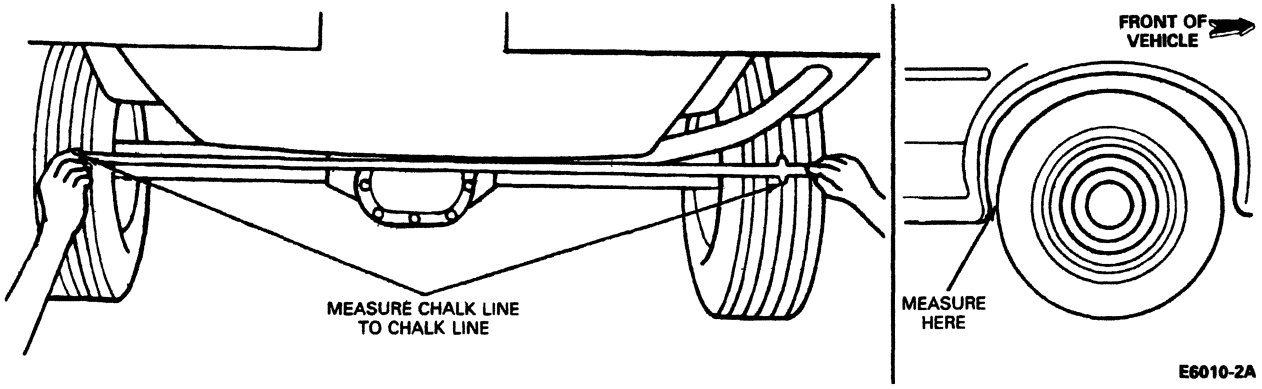

6 The difference between the front and rear readings obtained in Steps 3 and 5 is the toe-out or toe-in condition of the axle housing

Toe-in occurs when the front reading is less than the rear reading Toe-out occurs when the front reading is greater than the rear reading

All numbers below are for example only

Front reading 52-3/16 inch

Rear reading 52-1/16 inch

Toe-out 2/16 (1/8) inch

7 To determine camber, find the average of the front and rear readings obtained in Steps 3 and 5 Then, subtract the bottom reading (obtained in Step 4) from this

Positive (+) camber is when the bottom reading is less than the average of the front and rear readings Negative (-) camber is when the bottom reading is greater than the average of the front and rear readings

Average of front and rear readings (example)

52-2/16 inch

Bottom reading 52-2/16 inch

Difference or camber 0

8 If the rear axle exceeds these guidelines, verify rear springs and suspension components are OK If suspension is OK, remove axle and measure rear axle housing with an inclinometer to determine if axle is bent Replace rear axle housing only if confirmed as bent

Noise Acceptability

A gear-driven unit, especially an automotive drive axle, will produce a certain amount of noise Some noise is acceptable and might be audible at certain speeds or under various driving conditions, such as a newly paved blacktop road The slight noise is not detrimental to operation of the rear axle and must be considered normal

With limited slip differential axles, a slight chatter noise on slow turns after extended highway driving is considered acceptable and has no detrimental effect on the locking axle function

Preliminary Diagnosis

Question the Customer

The preliminary diagnosis begins with the service technician asking the customer diagnostic questions, especially for conditions of noisy operation or vibration

Always ask the customer the following

1 What is the exact nature of the symptom? If it is a vibration, how is it felt? If a noise, what kind? Is it high-pitched, a rumbling noise or some other concern?

2 What are the driving conditions in which the symptoms appear road speed, drive or coast, on turns or on a grade only?

3 Is the condition constant or variable Does a noise increase in pitch with speed or some other factor?

All information should be written on the service order so the technician will know where to start looking The technician must be able to identify the axle concern from what is written on the order following the road test

It is, of course, preferable to have the customer demonstrate the symptoms in a road test whenever possible

DIAGNOSIS AND TESTING (Continued)

Road Test

A road test is mandatory for any customer concern of noise or vibration that is not eliminated by the on-hoist check of chassis components. The Road Test Form is arranged to record the conditions that might be heard or felt during this test.

The Road Test Form lists four operating conditions or modes in which some axle noises come and go: drive, cruise, coast and float. The modes are defined in the following chart.

Mode	Conditions
DRIVE	Accelerating the vehicle; a definite throttle depression applying engine torque.
CRUISE	Maintaining a constant speed with the throttle applied.

(Continued)

Mode	Conditions
COAST	Decelerating with the throttle closed.
FLOAT	Controlled deceleration; backing the throttle continually to prevent either braking or accelerating torque from the engine.

To perform a good diagnostic check, it is important to operate the vehicle in all four modes and check off those in which the noise occurs. Write down the kilometers per hour (miles per hour) range at which both noise and vibration occur. On vehicles equipped with overdrive transmissions, evaluate rear axle noise with the transmission in direct drive and not in overdrive. Transmission noise can be mistaken for rear axle noise when in overdrive.

Official Licensed Product
Ford Motor Company

DIAGNOSIS AND TESTING (Continued)

Axle Diagnosis Check Sheet

Road Test Form

ROAD TEST FORM

1. Did condition exist when vehicle was new? ☐ Yes ☐ No

   How did condition begin?

   ☐ Gradually occurred Mileage _____

   ☐ Suddenly occurred Mileage _____

2. Vehicle NVH between _____ MPH and _____ MPH

3. Neutral engine run-up NVH? ☐ Yes ☐ No

4. What driving conditions affect the NVH?

   ☐ Float

   ☐ Drive

   ☐ Coast

   ☐ Cruise

5. If a vibration, where is the vibration noticed?

   ☐ Seat

   ☐ Steering wheel

   ☐ Instrument panel pad

   ☐ Floor

   ☐ Hood and fenders

6. If a noise, define as:

   ☐ Buzz

   ☐ Moan

   ☐ Drone

   ☐ Rumble

   ☐ Hum

   ☐ Other Describe: _____

Official Licensed Product
Ford Motor Company

E9708-A

DIAGNOSIS AND TESTING (Continued)

Analysis of Leakage

Most rear axle leakage conditions can be corrected without a teardown. However, it is important to clean up the leaking area enough to identify the exact source.

A plugged rear axle housing vent (4022) can cause wheel or pinion seal leaks due to internal pressure buildup.

Make sure axle lubricant level is 6.4-14.2 mm (1/4-9/16 inch) for Ford axles or 6.4-19.1 mm (1/4-3/4 inch) for Dana axles below bottom of fill hole.

Flange Yoke Seal

When the rear axle drive pinion seal (4676) leaks, it is usually because it was not installed carefully or properly, or because of poor quality on the seal journal surface.

Any damage to the seal bore (dings, dents, gouges or other imperfections) will distort the seal casing and allow leakage past the outer edge of the rear axle drive pinion seal.

The rear axle drive pinion seal can be torn, cut or gouged if it is not assembled carefully. The spring that holds the rear axle drive pinion seal against the rear axle universal joint flange (4851) may be knocked out, allowing leakage past the lip.

The rubber lip can harden (like plastic) with cracks at the oil lip contact point, especially in presence of high temperatures. The contact point on the rear axle universal joint flange is usually black, indicating excessive heat. Marks, nicks, gouges or rough surface texture on the seal journal of the rear axle universal joint flange will also cause leaks. Excessive rear axle drive pinion seal wear will be noted. The rear axle universal joint flange should be replaced if any of these conditions exist.

Metal chips or sand trapped at the sealing lip also may cause oil leaks. This can cause a wear groove on the rear axle universal joint flange and heavy pinion seal wear.

When any seal leaks, confirm that air passes freely through vent hose and fitting. Clean out as needed.

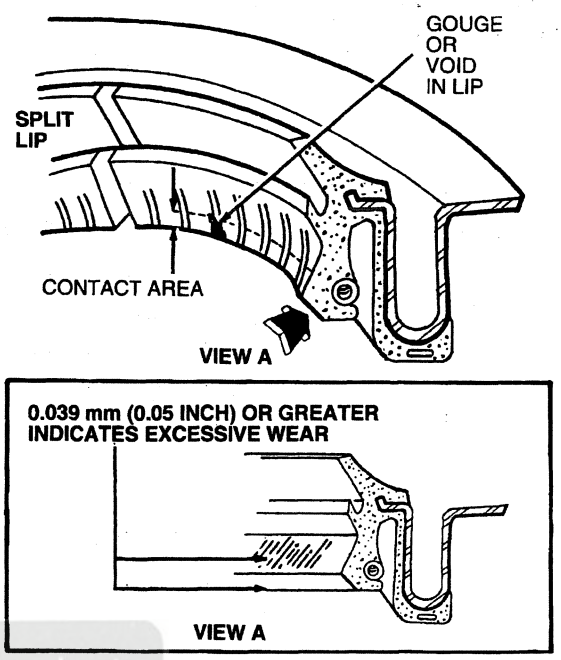

E5517-E

Drive Pinion Nut

There have been instances of oil leaking past the threads of the pinion nut. The condition can be corrected by removing the nut and applying Pipe Sealant With Teflon® D8AZ-19554-A or equivalent meeting Ford specification WSK-M2G350-A2 on the threads and nut face.

NOTE: Be sure to follow the correct procedure for setting the bearing preload when the nut is installed.

Axle Shaft (Wheel) Seals

Axle shaft oil seals are susceptible to the same kinds of damage as rear axle drive pinion seals if improperly installed. The seal bore must be clean and the lip handled carefully to avoid cutting or tearing it. Axle shaft journal surface must be free of nicks, gouges and rough surface texture.

Casting Porosity (Holes in Casting)

Occasionally there will be a rear axle housing (4010) leak through small holes in the cast axle housing. These holes (casting leakage) are caused by gas bubbles in the casting process and are known technically as a porous condition or porosity.

There are two recommended types of service:

1. Peen in a small amount of body lead. Seal the hole with Loctite® 290 or equivalent meeting Ford specification M3D35-A(E).
2. In larger holes (or pockets), drill a shallow hole and tap it for a small setscrew. Install the setscrew and seal it over with Loctite® 290 or equivalent meeting Ford specification M3D35-A(E).

DIAGNOSIS AND TESTING (Continued)

Weld Leaks

Most minor weld leaks can be corrected with Loctite® 290 or equivalent meeting Ford specification M3D35-A(E). This includes the "puddle" or fill welds that join the axle tube to the center casting on integral axles. They sometimes leak and can be sealed easily. If a weld is broken, the rear axle housing must be replaced. The alignment is too critical for field service.

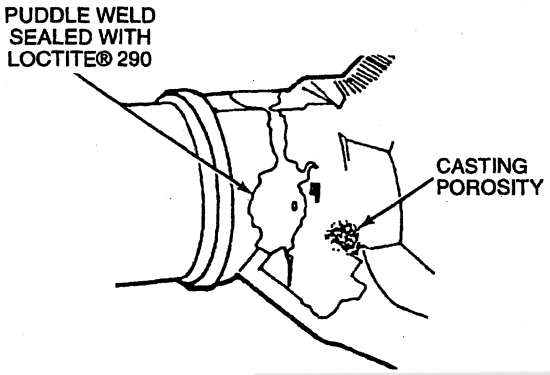

Analysis of Vibration

Few vibration conditions are caused by the rear axle. Most vibration in the rear end is caused by tires or driveline angle. On a vibration concern, follow the diagnosis procedure in Section 00-04 unless there is a good reason to suspect the axle.

Tires

WARNING: DO NOT BALANCE THE REAR WHEELS AND TIRES WHILE THEY ARE MOUNTED ON THE VEHICLE. TIRE DISINTEGRATION AND DIFFERENTIAL FAILURE COULD RESULT, CAUSING PERSONAL INJURY AND EXTENSIVE COMPONENT DAMAGE. USE ONLY AN OFF-VEHICLE WHEEL AND TIRE BALANCER.

Vibration is a definite concern with modern, high-mileage tires if they are not "true," both radially and laterally. They are more susceptible to vibration around the limits of radial and lateral runout of the tire and wheel assembly. They also require more accurate balancing. Wheel and tire runout checks, truing and balancing are normally done before axle inspection.

Sometimes a vibration concern can be corrected by properly rotating or inflating the tires.

Driveline Angle

SPECIAL SERVICE TOOL(S) REQUIRED

Description	Tool Number
Pinion Angle Level Gauge	T68P-4602-A

An incorrect driveline (pinion) angle can often be detected by the driving condition when vibration occurs.

- A vibration during coasting from 72 to 56 km/h (45 to 35 mph) is often caused by a high pinion angle.
- A vibration during acceleration, again around 56 to 72 km/h (35 to 45 mph), may indicate a lower-than-specified pinion angle. Refer to the following procedure to check driveline angle.

NOTE: Driveline angles are given in relation to a 0-degree longitudinal (fore-aft) unibody frame rail angle and are specified for individual components. Refer to the Specifications portion of this section for the specified engine, driveshaft and pinion angle.

1. Raise the vehicle on a drive-on type hoist or back onto a front-end alignment rack. Bounce the vehicle to normalize the suspension. This ensures that the suspension components are in the normal-load condition.
2. Measure the ride height. The vehicle must be in the curb height (empty) condition. Find the recorded ride height in the Rear Driveline Angles charts in the Specifications portion of this section. The specified driveline angles correspond to the measured ride height.

Official Licensed Product

DIAGNOSIS AND TESTING (Continued)

Front Ride Height Measurement Locations

FRONT RIDE HEIGHT

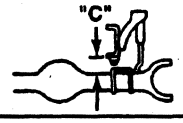

F-250 (4x4)
BOTTOM OF FRAME TO TOP OF AXLE

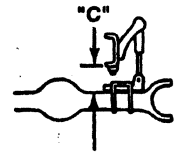

F-350 (4x4) MONOBEAM
BOTTOM OF METAL JOUNCE STOP TO TOP OF SPACER – FRONT SPRING PLATE

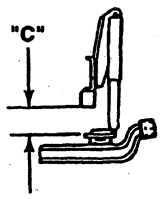

F-SUPER DUTY CHASSIS CAB (4x2)
BOTTOM METAL JOUNCE STOP TO TOP OF SPACER – FRONT SPRING PLATE. NOTE: CAMBER ANGLES NOT ADJUSTABLE.

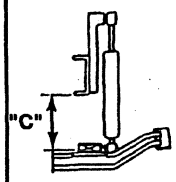

F-SUPER DUTY STRIPPED CHASSIS (4x2)
BOTTOM OF FRAME TO TOP OF FRONT SPRING SHOCK MOUNTING PLATE AT CENTER OF SPRING

REAR RIDE HEIGHT

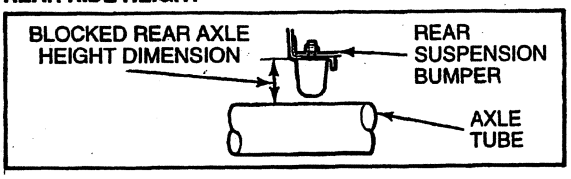

DE0177-A

3. Driveline angles are measured with Pinion Angle Level Gauge T68P-4602-A or with an adjustable bubble (spirit level) protractor. The protractor is used when the tool kit is not available or when the angles to be measured are more than 12 degrees. All angles should be read within 1/2 degree with the tool or protractor held plumb on a clean, flat surface.
4. Place the vee magnet of Pinion Angle Level Gauge T68P-4602-A on the bottom of the vehicle frame as shown and calibrate the tool to a zero bubble reading. This gives the 0-degree frame angle. Average the readings from both sides to obtain a more accurate reading.

FRAME REFERENCE POINT

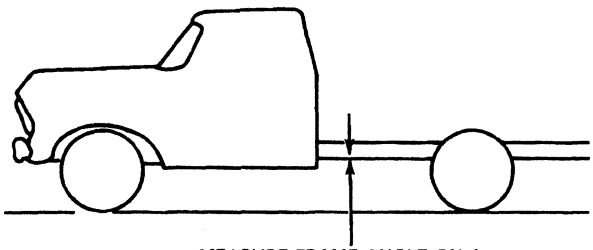

F5028-B

5. Check the engine angle by rotating the driveshaft until one transmission slip-yoke ear is parallel to the floor. Remove the retaining snap ring, if so equipped, from the yoke. Install the pinion angle level gauge and record the angle reading. If the angle reading differs from the specified angle by 1 degree or more, proceed to Engine Angle Adjustments under Driveline Angle Correction in the Adjustments portion of this section and neutralize the engine and transmission mounts. With the engine angle at specifications, check the driveshaft and pinion angles. Reinstall the snap ring.

ENGINE ANGLE

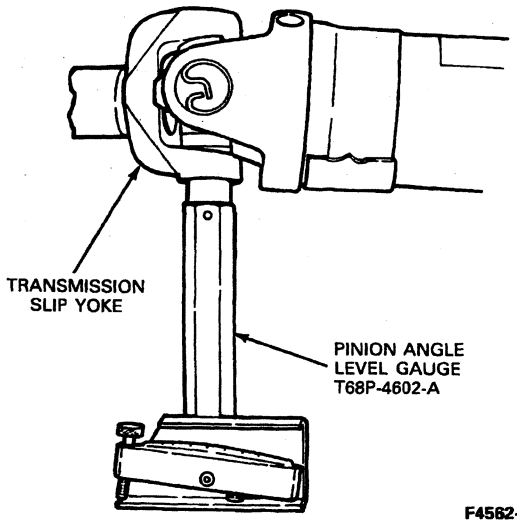

F4562-C

DIAGNOSIS AND TESTING (Continued)

6. To check the driveshaft angle, rotate the driveshaft so one driveshaft yoke ear is parallel to the floor. Remove the retaining snap ring, if so equipped, from the yoke. Install the magnetic pinion angle level gauge on the U-Joint bearing cup and record the angle reading. Reinstall the snap ring. Check the pinion angle and if either or both readings are not to specification, refer to Driveshaft and Pinion Angle Adjustment under Driveline Angle Correction in the Adjustments portion of this section.

DRIVESHAFT ANGLE

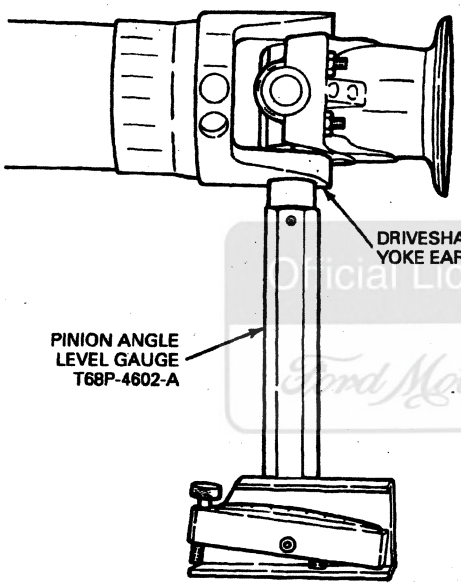

F4563-B

7. To check the pinion angle, rotate the driveshaft so that one ear of the rear axle yoke is parallel to the floor. Install the Pinion Angle Level Gauge and record the reading. If the reading is not to specifications, refer to Driveshaft and Pinion Angle Adjustment in the Adjustments portion of this section.

PINION ANGLE

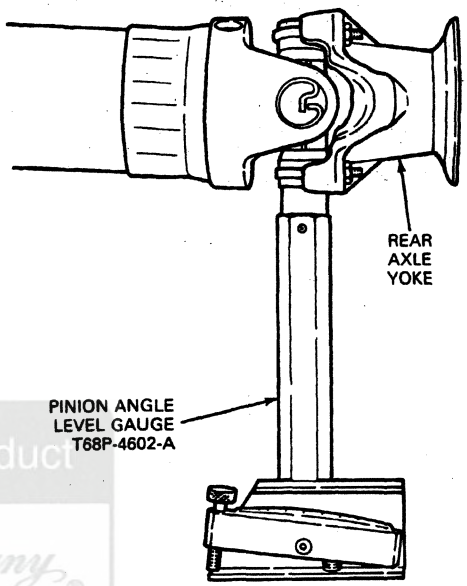

F4564-1A

Official Licensed Product
Ford Motor Company

DIAGNOSIS AND TESTING (Continued)

8 NOTE When using a bubble (spirit level) protractor, the angles are read from the 0-degree frame angle The 90-degree mark on the protractor is read as the 0-degree frame angle For example, when the protractor is placed vertically on the component and the protractor reads 85 degrees, the component angle is actually +/-5 degrees

To check driveline angle with adjustable bubble (spirit level) protractor, follow Steps 1 and 2 to normalize suspension and measure ride height Place the protractor on the bottom of the vehicle frame directly below the front driver/passenger seat This gives the 0-degree frame angle Take and average the readings from both sides to obtain a more accurate reading

FRAME REFERENCE POINT

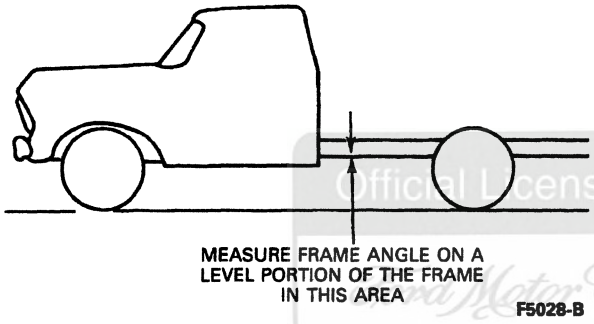

F5028-B

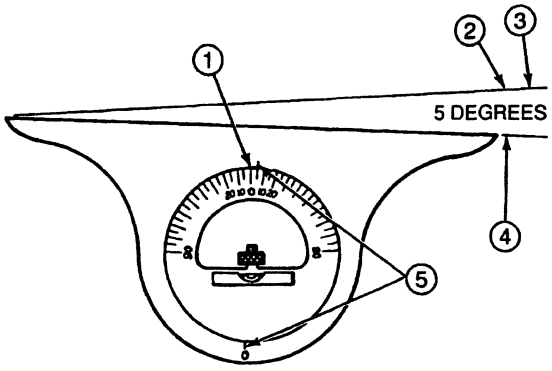

E1759-D

Item	Part Number	Description
1	—	Protractor 0-Degree Mark
2	—	A 5-Degree Angle Is Read from the 0-Degree Mark
3	5005	Frame
4	—	Component Angle
5	—	Protractor Indexing Marks

9 NOTE If slip-yoke ears are not machined, rest protractor against bottom of starter motor (11001)

To check the engine angle, rotate the driveshaft until one transmission slip-yoke ear is parallel to the floor Place the protractor so it is flush against the slip-yoke ear

10 Make sure the protractor is not resting against any portion of the driveshaft Record the angle reading If the engine angle reading differs from the specified angle by 1 degree or more, proceed to Engine Angle Adjustments under Driveline Angle Correction in the Adjustments portion of this section and normalize the engine and transmission mounts With the engine angle at specifications, check the driveshaft and pinion angles Refer to Specifications in this section

ENGINE ANGLE

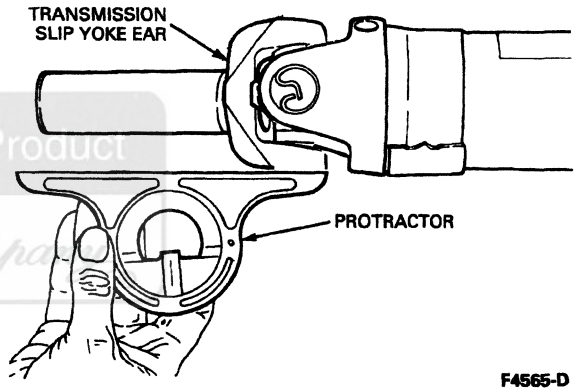

F4565-D

11 To check the driveshaft angle, place the protractor on any portion of the driveshaft tube so the plane surface of the protractor is flush against the bottom surface of the tube and parallel to the floor

12 Record the reading Subtract frame angle to get driveshaft angle Check the pinion angle and if both or either reading is not to specifications, refer to Driveshaft and Pinion Angle Adjustment under Driveline Angle Correction in the Adjustments portion of this section

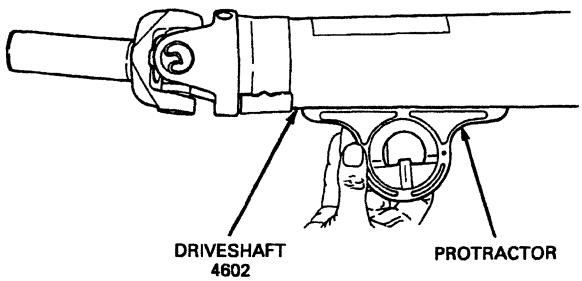

F4566-B

Official Licensed Product Ford Motor Company

DIAGNOSIS AND TESTING (Continued)

13. To check the pinion angle, place the protractor in a vertical position so it is flush against two axle housing cover retaining bolts. Rotate the protractor bubble indicator so the 90-degree marks align with the indexing marks. Read the protractor and calculate angle. For example, if the protractor indicates a reading of 85 degrees, the pinion angle reading is +/-5 degrees. Record the reading. If the reading is not to specification, refer to Driveshaft and Pinion Angle Adjustment under Driveline Angle Correction in the Adjustments portion of this section.

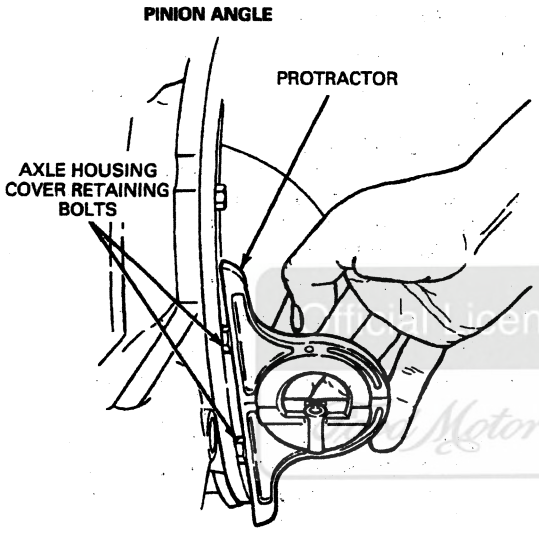

F4567-B

14. Road test to verify resolution of condition. If driveline angle correction and driveline runout/balance procedures do not eliminate the vibration condition, the differential ring gear and pinion (4209) should be checked for backlash variation. Refer to Driveshaft Runout and Balance in the Adjustments portion of this section.
15. Remove the axle housing cover (4033). Refer to Section 05-02C. Measure ring gear backlash on 30 consecutive ring gear teeth using Dial Indicator with Bracketry TOOL-4201-C or equivalent and note the variation between the high and low readings. If over 0.10 mm (0.004 inch), replace the differential ring gear and pinion. Refer to Section 05-02C.

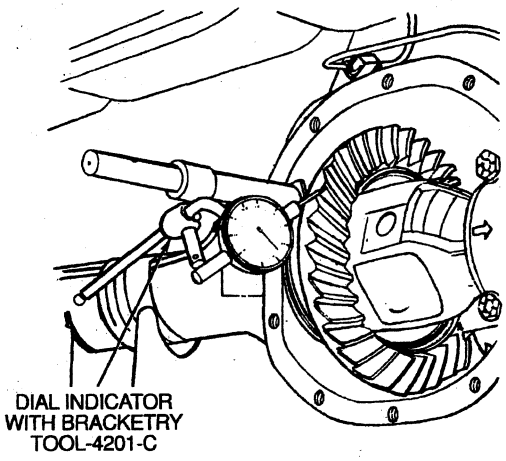

CHECKING REAR AXLE RING GEAR AND PINION BACKLASH

E4972-E

U-Joint Wear

Prior to checking driveline angularity, inspect the universal joints on the driveshaft for proper operation.

Place the vehicle on a frame hoist and rotate the driveshaft by hand. Check for rough operation or seized U-joints. If the U-joint shows signs of seizure, excessive wear or improper seating, scribe alignment marks on the driveshaft and rear axle companion flange. Remove the driveshaft and remove and replace the U-joint. Install the driveshaft in the marked original position.

U-Joint Phasing

When assembling a slip between center driveshaft, the universal joint yokes must be assembled to the driveshaft on the same plane. If not, the assembly may be out of balance, causing a driveline vibration.

NOTE: Two-piece driveshafts cannot be assembled out of phase due to a master or blind spline located on the yoke (except F-Super Duty Motorhome).

Axle Shaft Runout

Runout of the axle shaft (4234) at either end is a possible cause of rear end vibration. It is advisable to check the axle shaft for runout of the bolt circle (radial).

For bolt circle runout, refer to Section 04-04 in the Body, Chassis Manual.

NOTE: If the axle shaft assembly is removed, check runout of the shaft itself. The forged (unmachined) part of the shaft is allowed to have as much as 3.0 mm (0.120 inch) runout. This alone will not cause a vibration condition.

Drive Pinion Stem and Rear Universal Joint Flange

Rear axle universal joint flange runout should be checked when all other checks have failed to show the cause of vibration.

Ford Motor Company Licensed Publication

DIAGNOSIS AND TESTING (Continued)

Improper installation of the rear axle drive pinion seal can cause excessive rear axle universal joint flange runout. If the spring on the seal lip is dislodged, it will jam up and cock the flange. Check that possibility before replacing the differential ring gear and pinion because of excessive rear axle universal joint flange runout.

Two-Piece Driveshaft

The two-piece driveshaft used in longer wheelbase light truck models introduces some special considerations to diagnosis and testing. As compared with a one-piece installation, the two-piece design includes a front or coupling shaft, a rubber-insulated frame-mounted driveshaft center bearing bracket, a splined slip joint and an intermediate universal joint at the front of the rear driveshaft.

Bearing Shimming

Drive-away shudder is the predominant symptom associated with driveline angles condition on vehicles with two-piece driveshafts. After eliminating coupling shaft phasing as the possible cause, driveline angles should be measured and corrected. Drive-away shudder can usually be serviced by shimming down the driveshaft center bearing bracket in 6.35-mm (1/4-inch) increments using shims E0TZ-4A209-A or equivalent until the drive-away shudder is eliminated. Plate stock must be used to maintain proper preload compression of the rubber insulator.

1. Replace the existing bolts with the appropriate length 7/16-14 hex-head bolts.
2. Tighten bolts to 51-73 N·m (38-54 lb-ft).
3. Road test to verify resolution of condition.

If the drive-away shudder cannot be serviced by shimming down the driveshaft center bearing bracket, check driveline angle. Refer to Driveline Angle under Analysis of Vibration in the Diagnosis and Testing portion of this section.

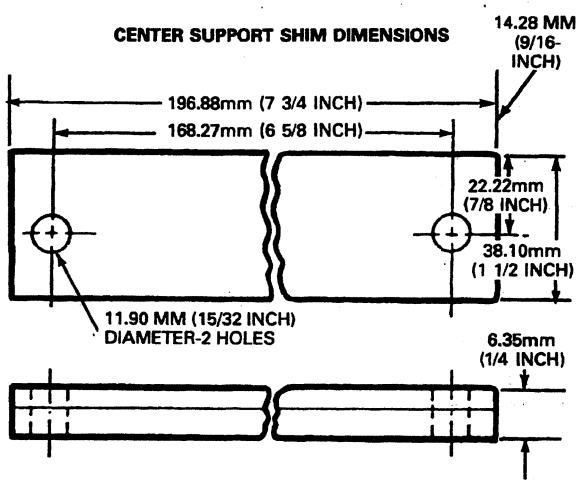

Coupling Shaft/Center Bearing Alignment

Vehicle noise and vibration can be caused by dislocated or failed driveshaft center bearing support rubber insulator, contaminated driveshaft center bearing support (4800) or excessive compression of the rubber insulator.

The service for this condition is as follows:

1. Remove the coupling shaft from the vehicle.
2. Remove the driveshaft center bearing bracket and retainer.
3. Remove the rubber insulator.
4. Press driveshaft center bearing support and bearing retainer off the coupling shaft.
5. Press the dust slinger off the coupling shaft.
6. Replace with Center Bearing Assembly Kit E4TZ-4800-A.
7. Install driveshaft center bearing support in rubber insulator and press bearing on shaft with the turned-in lip toward the dust slinger (forward). The support bracket must be installed with the deep flange rearward.
8. Reassemble the coupling shaft.
9. Reinstall the driveline in the vehicle with the yokes phased properly.
10. Road test to verify resolution of condition.
11. If vibration still exists, insert 1.59-mm (1/16-inch) shims between driveshaft center bearing bracket and support plate (on bolt ends of driveshaft center bearing bracket) to reduce compression of the rubber insulator as required.

Axle Noise

Refer to Symptom Chart in this section.

Non-Axle Noise

There are a few other conditions that can sound like axle noise and have to be considered in diagnosis.

The three most common are exhaust, tires and trim mouldings. Make sure that none of the following are the cause of the noise before proceeding with an axle teardown and diagnosis.

- In certain conditions, the pitch of the exhaust can sound like gear whine. At other times, it can be mistaken for wheel bearing rumble.
- Tires — especially snow tires — can have a high-pitched tread whine or roar similar to gear noise. Radial tires, to some degree, have this characteristic. Any non-standard tire with an unusual tread construction can also emit a roar or whine-type noise.
- Trim, grille and mouldings can also cause whistling or whining noises.

DIAGNOSIS AND TESTING (Continued)

Analysis of Gear Noise

Gear Howl and Whine

Before disassembling the axle to diagnose and correct gear noise, eliminate the tires, exhaust, trim items, roof racks, axle shafts and rear wheel bearings as possible causes.

The noises listed on the Road Test Form in this section usually have specific causes that can be diagnosed by observation as the unit is disassembled. The initial clues are, of course, the type of noise heard on the road test and the driving conditions.

Bearing malfunctions will normally be obvious at disassembly. As noted earlier, inner and outer pinion bearings make a high-pitched, whistling noise, usually at all speeds. If there is only one pinion bearing that is malfunctioning, the noise may vary in different driving phases.

Pinion bearings are frequently replaced unnecessarily on axles with low mileage under 24,139 km (15,000 miles) when correcting gear noise. They should not be replaced unless they are actually scored or damaged, or there is a specific differential pinion bearing noise. Examine the large end of the rollers for wear. If the pinion bearing's original blend radius has worn to a sharp edge, the pinion bearing should be replaced.

Remember that the low-pitched rumble of a worn or damaged wheel bearing can also be caused by the exterior luggage rack or tires.

Rear wheel bearing noise might be mistaken for pinion bearing noise. Inspect the rear wheel bearing carefully before tearing down the axle.

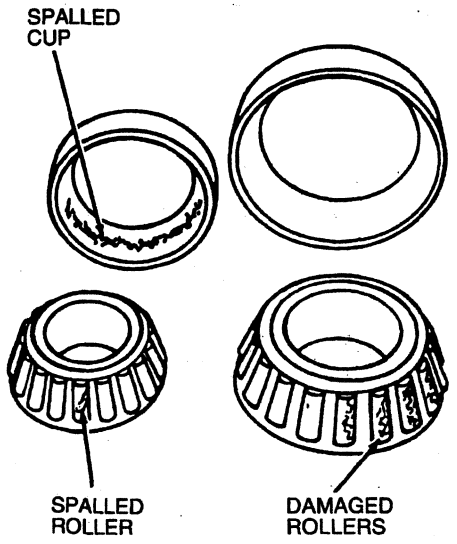

E3760-E

Chuckle

Chuckle that occurs on the coast driving phase is usually caused by excessive clearance between the differential gear hub and the differential case bore. It can also be caused by a damaged tooth on the coast side of the pinion or ring gear.

Any damage to a gear tooth on the coast side can cause a noise identical to chuckle. Even a very small tooth nick or ridge on the edge of a tooth is enough to cause the noise.

You can often correct this condition and eliminate the noise simply by cleaning up the gear tooth nick or ridge with a small grinding wheel. If the cleaned up or damaged area is larger than 3.2 mm (1/8 inch), it is advisable to replace the gearset.

To check the differential ring gear and pinion, remove as much lubricant as possible from the gears with clean solvent. Wipe the gears dry or blow them dry with compressed air. Look for scored or damaged teeth. Also look for cracks or other damage.

If either gear is scored or damaged badly, the differential ring gear and pinion must be replaced. If there is metal broken loose, the rear axle housing must also be cleaned to remove particles that could cause damage later. Any other damaged parts in the rear axle housing must be replaced.

Damaged Gear Teeth

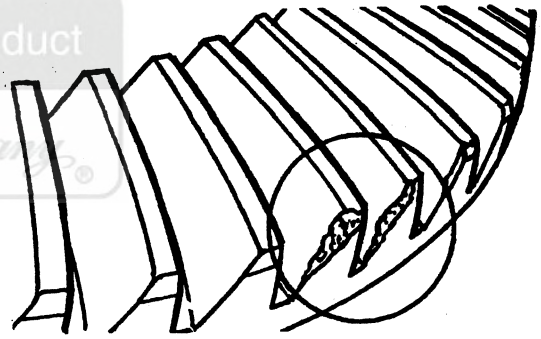

E3754-D

Scored Gear Teeth

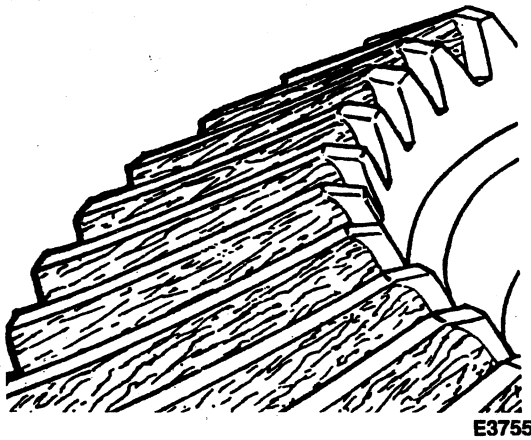

E3755-D

Unlicensed Product Ford Motor Company

DIAGNOSIS AND TESTING (Continued)

Knock

Knock, which can occur in all driving phases, has several causes. In most cases, the technician will discover one of the following conditions:

1. A gear tooth damaged on the drive side is a common cause of the knock. This can usually be corrected by grinding the damaged area.

Damaged Teeth or Gearset

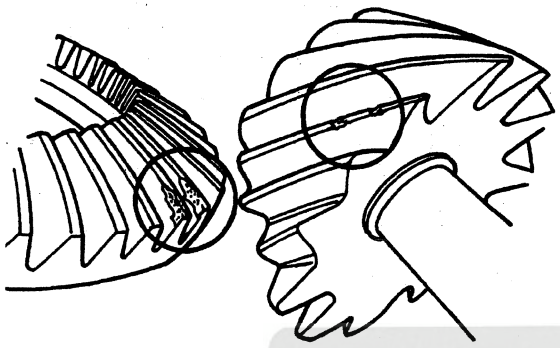

E3756-E

Drive Side Knock

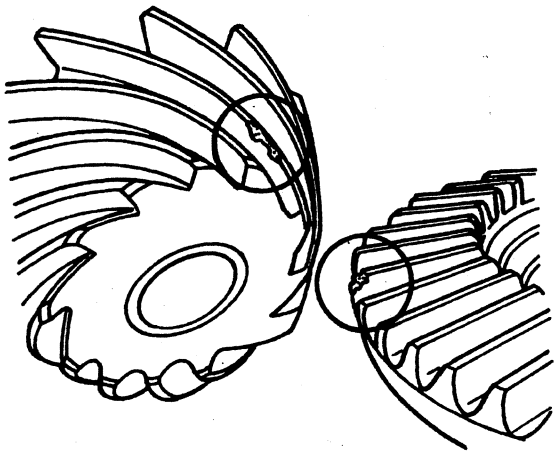

E3757-E

2. Occasionally, the rear axle differential gear case bolts (4216) will knock against the inside of the rear axle housing casting. The cause may be too little clearance due to casting flash, bumps or simply the bolts may be loose. In this case, the differential case (4204) can be removed and the interference points ground out.
3. NOTE: Be sure to measure the end play with a dial indicator and not by feel.

   Knock is also characteristic of excessive end play in the axle shafts. Up to 0.762 mm (0.030 inch) is allowed in semi-float axles. The frequency of knock will be less because the axle shaft speed is slower than the driveshaft.

Clunk, Ford Rear Axles

SPECIAL SERVICE TOOL(S) REQUIRED

Description	Tool Number
Companion Flange Holding Tool	T57T-4851-B

1. Raise vehicle on hoist.
2. Use a rigid bar or pipe of suitable length. Clamp one end to the rear axle companion flange using Companion Flange Holding Tool T57T-4851-B.
3. Clamp the other end to the frame or body member in order to prevent movement of the rear axle universal joint flange.

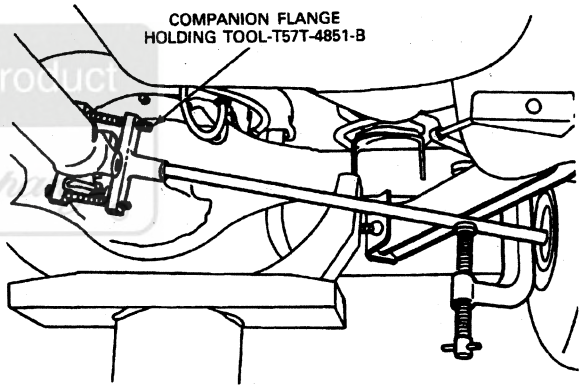

E4209-1B

4. Lower the vehicle so that one rear wheel is resting on a wheel chock to prevent it from turning. The other rear wheel will then be used to measure total rear axle backlash.
5. Rotate the free wheel slowly, by hand, until a feel of driving the rear axle is encountered. Position a crayon or chalk firmly on the side of the tire 305 mm (12 inches) from the center of the wheel. Rotate the wheel slowly in the opposite direction until the feel of driving the rear axle is encountered again.
6. Measure the length of the crayon or chalk mark on the tire. If the length of the mark is 25.4 mm (1 inch) or less, the rear axle backlash is within allowable limits.
7. If the chalk mark is greater than 25.4 mm (1 inch), check for these conditions:
   a. Elongation of the differential pinion shaft (4211) holes in the differential case.
   b. Missing differential, pinion or differential side gear thrust washer (4228).

Official Licensed Product
Ford Motor Company

DIAGNOSIS AND TESTING (Continued)

c. Galling of the differential pinion shaft and bore.

d. Excessive ring gear and pinion backlash. Refer to Gear Tooth Contact Pattern Check in this section.

8. If any or all of these conditions are present, service or replace parts as necessary. If none of these conditions are present, there may be a loose fit of the axle shafts to the side gear splines. Continue with Steps 9-12 until the correction is made.
9. Install new differential side gear (4236) and check the backlash.
10. Install two new axle shafts.
11. Replace the differential case.
12. Install the driveshaft so the index mark on the driveshaft slip yoke (4841) is in line with the index mark on the driveshaft centering socket yoke (4782). This ensures original driveline balance. Refer to Section 05-01. If vibration exists after installation, refer to Diagnosis and Testing in Section 00-04 in the Body, Chassis Manual.

Clunk, Dana Rear Axles

1. Apply parking brake to keep both rear wheels from turning.
2. Mount a Dial Indicator / Magnetic Base D78P-4201-B or equivalent on the differential carrier housing with the indicator point positioned to contact the rear axle universal joint flange 38.1 mm (1-1/2 inch) from the center line of the differential pinion shaft.
3. With the transmission in neutral and engine not running, check the total rotational movement of the rear axle universal joint yoke. If the total reading on the dial indicator is 1.9 mm (0.075 inch) or less, the rear axle backlash is within allowable limits.
4. If total reading on the dial indicator is more than 1.9 mm (0.075 inch), check for these conditions:
   a. Elongation of the differential pinion shaft holes in the differential case.
   b. Missing differential, pinion, or differential side gear thrust washer.
   c. Galling of the differential pinion shaft and bore.
   d. Excessive ring gear and pinion backlash. Refer to Section 05-02C to check backlash.
5. If any or all of these conditions are present, service or replace parts as necessary. If none of these conditions are present, there may be a loose fit of the axle shafts to the side gear splines. Continue with Steps 6-9 until the correction is made.
6. Install new differential side gears and check the backlash.
7. Install two new axle shafts.
8. Replace the differential case.
9. Install the driveshaft so the index mark on the driveshaft slip yoke is in line with the index mark on the driveshaft centering socket yoke. This ensures original driveline balance. Refer to Section 05-01. If vibration exists after installation, refer to Diagnosis and Testing in Section 00-04 in the Body, Chassis Manual.

Bearing Whine

Bearing whine is a high-pitched sound similar to a whistle. It is usually caused by damaged pinion bearings, which are operating at driveshaft speed. Bearing noise occurs at all driving speeds. This distinguishes it from gear whine which usually comes and goes as speed changes.

Chatter While Turning

Chatter while turning is a condition in which the rear end vibrates. The vibration is plainly felt and may be heard as a groaning noise. In conventional axles, extra differential thrust washers cause a condition of partial lockup that creates this chatter.

Click at Engagement

Click at engagement is a slight noise condition, distinct from a clunk, that occurs in reverse or drive engagement. It can be corrected by installing a rear axle drive pinion shaft oil slinger (4670) between the rear axle universal joint flange and outer differential pinion bearing (4621).

Axle Shaft Noise

Axle shaft noise is similar to gear noise and differential pinion bearing whine. Axle shaft bearing noise will normally distinguish itself from gear noise by occurring in all driving modes (drive, coast and float), and will persist with transmission in neutral while vehicle is moving at problem speed. If the vehicle makes this noise, remove suspect axle shafts, replace rear wheel bearings and install a new set of wheel seals. Re-evaluate vehicle for noise before removing any internal components.

Bearing Rumble

Bearing rumble sounds like marbles being tumbled. This condition is usually caused by a damaged wheel bearing. The lower pitch is the result of wheel bearings turning at only about one-third of driveshaft speed. Wheel bearing noise also may be high-pitched, similar to gear noise, but will be evident in all four driving modes.

Analysis of Inoperative Conditions

If the axle fails to operate, there will be broken or jammed-up parts.

Broken Axle Shaft

Inspect a broken axle shaft for a twist in the spline or next to the break.

Breaks that occur away from the spline or that are not accompanied by a twist in the spline may be caused by forging flaws or fatigue of the axle shaft.

Conditions that can cause a broken axle shaft include forging flaws or excessive impact load to the axle shaft as a result of a collision or other factors.

DIAGNOSIS AND TESTING (Continued)

Broken Welds

Rear axle housing welds, if completely broken, call for replacement of the rear axle housing.

Wheel Bearing Malfunctions

Because of the severe loads they must handle, rear wheel bearings may require replacement at high mileage. If a rear wheel bearing fails at low mileage, it is usually caused by overloading or a defect in the bearing.

Axle Lockup

Lockup or seizure of the axle shaft usually indicates inadequate lubrication. The lubricant prevents friction and helps cool the parts as they heat up. Without enough lubricant, the heated parts get soft and may eventually weld together. Check for lubricant leaks after servicing.

Symptom Chart

AXLE AND DRIVESHAFT SERVICE

Condition	Possible Source	Action
• Excessive Rear Axle Noise	• NVH (noise, vibration and harshness) problem.	• PERFORM the NVH tests to determine whether the noise is an NVH caused by a rear axle problem. REFER to Section 00-04 in the Body, Chassis Manual.
	• Worn or damaged rear wheel bearing.	• REFER to Section 00-04 in the Body, Chassis Manual for diagnosis of Shake / Vibration. REPLACE rear wheel bearings if required.
	• Rear axle differential.	• ROAD TEST vehicle to verify problem is rear axle noise rather than other system noise. REFER to Section 00-04 in the Body, Chassis Manual. SERVICE or REPLACE parts as required.
• Loud Clunk in the Driveline When Shifting from Reverse to Forward	• High idle speed.	• ADJUST idle speed.
	• Loose engine mounts.	• INSPECT, SERVICE as required.
	• Loose or worn driveshaft components, rear axle universal joint flange retaining nut below specs.	• RAISE vehicle, ROTATE driveshaft by hand to isolate problem as driveshaft or rear axle problem. SERVICE or REPLACE as required.
	• Rear axle shafts or differential.	• REMOVE and INSPECT. SERVICE as necessary.
	• Inoperative shock absorbers or loose rear springs or suspension arms.	• INSPECT, SERVICE or REPLACE as required.
	• Excessive backlash in axle, or transmission.	• PERFORM total backlash check of rear axle. CHECK transmission. REFER to appropriate section of Group 07. SERVICE or REPLACE as necessary.
	• Insufficient lubrication.	• ADD lubricant as required.

Official Licensed Product
Ford Motor Company

DIAGNOSIS AND TESTING (Continued)

AXLE AND DRIVESHAFT SERVICE (Continued)

Condition	Possible Source	Action
• Driveline Clunk as Vehicle Starts to Move Following a Brake Stop (Two-Piece Driveshaft)	• Loose rear spring U-bolts. • Worn or galled output driveshaft and coupling shaft splines. • Worn or galled driveshaft slip yoke splines. • Damaged driveshaft slip yoke seal. • Insufficient lubrication in driveshaft slip yoke.	• TIGHTEN U-bolts to specification. • REMOVE the driveshaft from the vehicle. CLEAN the male splines and INSPECT for worn or galled splines. REPLACE if necessary. • CLEAN and INSPECT the female splines of the driveshaft slip yoke for worn or galled condition. REPLACE if necessary. • REPLACE seal. • Using a long handle (stencil type) brush, APPLY grease evenly on all the splines of the driveshaft slip yoke. REINSTALL driveshaft and using a hand grease gun, LUBRICATE the driveshaft slip yoke through the grease fitting. Use Premium Long-Life Grease XG-1-C or -K or equivalent meeting Ford specification ESA-M1C75-B. NOTE: Install the driveshaft slip yoke, making sure that the coupling shaft and driveshaft are in phase.
• On Turns, the Rear Axle Has a Chattering Noise (Limited Slip Rear Axles Only)	• Improper lubricant. • Differential.	• ROAD TEST vehicle — DRIVE in tight circles, five clockwise and five counterclockwise. If chatter is still evident, FLUSH and REFILL with specified rear axle lubricant, and dosage of friction modifier additive. (See Front and Rear Axle Lubricant Specifications and Capacities at the end of this section.) • REMOVE differential, SERVICE as required.
• Ford Limited Slip Does Not Work in Snow, Mud or on Ice	• Differential.	• REFER to Limited Slip Differential, In-Vehicle Check under Component Tests in the Diagnosis and Testing portion of this section. SERVICE as required. REFER to Section 05-02B.
• Dana Limited Slip Does Not Work in Snow, Mud or Ice	• Worn or damaged differential.	• Starting with one wheel on a slippery surface, APPLY the parking brake lightly. Gradually OPEN throttle. If the vehicle moves, the rear axle is operating satisfactorily. If no movement, REFER to Section 05-02E.

Ford Motor Company

DIAGNOSIS AND TESTING (Continued)

AXLE AND DRIVESHAFT SERVICE (Continued)

Condition	Possible Source	Action
• Driveline Concerns	• Rear spring U-bolt loose. • Universal joint worn or improperly installed. • Coupling shaft driveshaft center bearing bracket improperly installed. • Excessive runout in rear axle universal joint flange or damaged universal joint. • Excessive lateral and radial tire and wheel runout. • Excessive driveshaft runout. • Rear axle universal joint flange out-of-balance. • Driveline and pinion angles out-of-specification. • Binding, damaged or galled splines on driveshaft slip yoke.	• RETIGHTEN U-bolt. • REINSTALL or REPLACE universal joint. • Correctly INSTALL driveshaft center bearing bracket and REPLACE if damaged. • ROTATE rear axle companion flange 180 degrees and REINSTALL. RECHECK and if not acceptable, REPLACE rear axle universal joint flange or universal joint and SERVICE as required. • REFER to Section 04-04 in the Body, Chassis Manual. • REPLACE driveshaft or ROTATE driveshaft 180 degrees and CHECK for out-of-balance condition. • REBALANCE driveshaft. • ADJUST to specifications. • CHECK transmission for proper lubricant, and CLEAN and LAP splines. LUBRICATE splines with Premium Long-Life Grease XG-1-C or -K or equivalent meeting Ford specification ESA-M1C75-B.
• Noise Is the Same on Drive or Coast	• Road noise. • Tire noise. • Front wheel bearing noise. • Improper driveline angles or phasing.	• Normal condition. • REBALANCE or REPLACE tire. • ADJUST or REPLACE wheel bearings. • ADJUST or CORRECT as required.
• Loud Clunk in the Driveline When Shifting from Reverse to Forward	• Loose or worn driveshaft components, universal joint retaining nut below specifications.	• INSPECT, SERVICE or REPLACE as required.
• Lubricant Leaking from the Pinion Seal, Axle Shaft Oil Seal or Support Arm to Housing	• Observe rear axle universal joint flange (end yoke) dust shield for damage in seal contact area or dust slinger. • Dirt or other debris is blocking vent.	• REPLACE rear axle universal joint flange (end yoke) and pinion seal if damage is found. • CLEAN rear axle housing vent.
• Noise Tone Lowers as Vehicle Speed Is Lowered	• Tire noise.	• REBALANCE or REPLACE tire.
• Similar Noise Is Produced with Vehicle Standing and Driving	• Engine noise. • Transmission noise.	• REFER to Section 03-00. • REFER to appropriate transmission section.
• Vibration	• Driveline. • Suspension. • Wheels / Tires.	• REFER to Section 00-04 in the Body, Chassis Manual.
• Noise Most Pronounced on Turns	• Differential side gears and differential pinion gears.	• REPLACE gears.
• Drive Noise, Coast Noise or Float Noise	• Wheel bearings or differential side bearings. • Differential ring gear and pinion.	• ADJUST or REPLACE wheel or differential side bearings. • CHECK differential ring gear and pinion. ADJUST or REPLACE.

Official Licensed Product
Ford Motor Company

DIAGNOSIS AND TESTING (Continued)

Component Tests

Driveline Vibration

Driveline vibration exhibits a higher frequency and lower amplitude than does high-speed shake. Driveline vibration is directly related to the speed of the vehicle and is usually noticed at speeds of 72 km/h (45 mph) or higher. Driveline vibration can be perceived as a tremor in the floorpan or is heard as a rumble, hum or boom. Driveline vibration can exist in all drive modes, but may exhibit different symptoms depending upon whether the vehicle is accelerating, decelerating, floating or coasting. If the vibration is particularly noticeable during acceleration or deceleration, especially at lower speeds, then driveline angle should be checked. Driveline vibration can be duplicated by supporting the axle upon a hoist or upon jack stands, though the brakes may need to be applied lightly in order to simulate road resistance.

1. Raise vehicle promptly after road testing, on twin-post hoist or jack stands, to prevent tire flat-spotting. Engage drivetrain and run-up to observed road test speed to verify presence of vibration. If not evident, check non-driving wheels with wheel-balancer spinner to rule out imbalance as a possible cause. On 4x4s, unlock front hubs or remove hub covers before spinning wheels. If required, balance non-driving wheels and repeat road test. If vibration is still evident, proceed to Step 3.
2. If vibration appeared in road speed hoist test, mark relative position of drive wheels on rear axle (4001) or hub lugs to permit reinstallation in original position, and remove wheels. Secure brake drums, if present, by installing all lug nuts in reversed position (on single-wheel vehicles) and repeat road-speed run-up. Dual rear wheel lug nuts (1012) may be installed in the normal orientation. If vibration is gone, see drive wheel runout and balance procedures in Section 04-04 in the Body, Chassis Manual. If vibration persists, proceed to Step 3.
3. Inspect driveshaft (4602) for signs of physical damage, missing balance weight, undercoating, or improperly seated, worn or binding universal joints. Check the index marks (paint spots) on rear of driveshaft and rear axle universal joint flange (4851). If these marks are more than 90 degrees apart, disconnect driveshaft and reindex to align marks as close as possible. The indexing marks denote the point of maximum runout of the rear axle universal joint flange and minimum imbalance of the driveshaft. Clean driveshaft and replace universal joints as necessary, or replace driveshaft if damaged. After any corrections are made, recheck vibration at road test speed. If gone, reinstall wheels and road test. If vibration persists, proceed to Step 4.

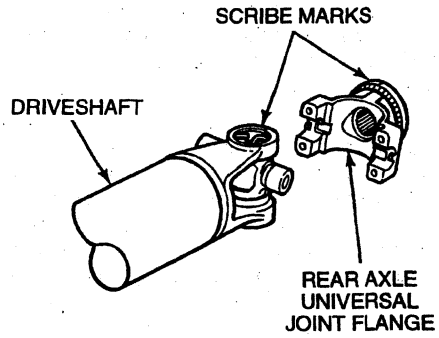

DE0234-A

4. With vehicle on hoist and wheels off, measure runout at front, center, and rear of driveshaft with indicator, rotating driveshaft by turning a brake drum or rotor. On a one-piece driveshaft, if runout exceeds 0.89 mm (0.035 inch) at front or center, the driveshaft must be replaced. If front and center are within this limit, but rear runout is not, mark the rear runout high point and proceed to Step 5. If runout is within limits at all points, proceed to Step 7 or to Driveshaft Runout and Balance in the Adjustments portion of this section.

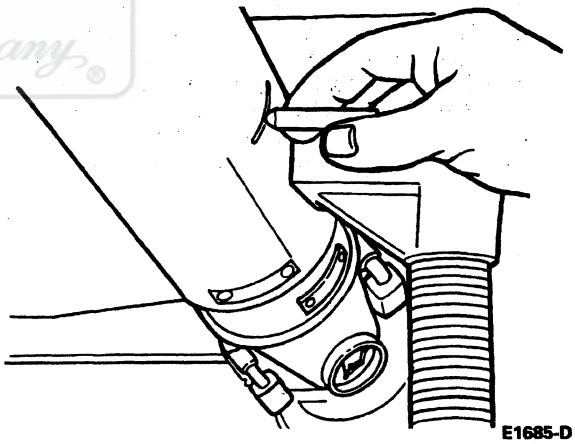

E1685-D

Ford Motor Company

DIAGNOSIS AND TESTING (Continued)

5. NOTE: Move universal joints in each direction of rotation during reindexing. If a universal joint feels stiff or has a gritty feel in any direction, replace the universal joint.

   Note or mark the indexing of driveshaft to rear axle universal joint flange. Disconnect the driveshaft, reindex 180 degrees, and reconnect. Circular rear axle universal joint flanges can be indexed in 45-degree increments to fine tune the runout condition; half-round rear axle universal joint flanges are limited to two positions. Check runout at rear of driveshaft, and if still over 0.89 mm (0.035 inch), mark high point and see Step 6. If runout is no longer excessive, check for vibration at road test speed, and, if still present, reindex the driveshaft slip yoke (4841) on the transmission output shaft 180 degrees and road test the vehicle. If the vibration persists, proceed to Step 7 or to Driveshaft Runout and Balance in the Adjustments portion of this section.

6. Excessive driveshaft runout may originate in the driveshaft itself or in the rear axle universal joint flange. To determine which, compare the two high points marked in Steps 4 and 5. If the marks are close together, within about 25 mm (1 inch), the shaft is eccentric, and should be replaced and checked for vibration. If the marks are on opposite sides of the driveshaft, about 180 degrees apart, the yoke or rear axle universal joint flange is responsible. After replacing, check for runout. When replacing a rear axle universal joint flange, driveshaft runout should not exceed 0.89 mm (0.035 inch). When runout is within limits, recheck for vibration at road speed. If vibration persists, balance the driveshaft.

CHECKING POSITION OF RUN-OUT MARKS

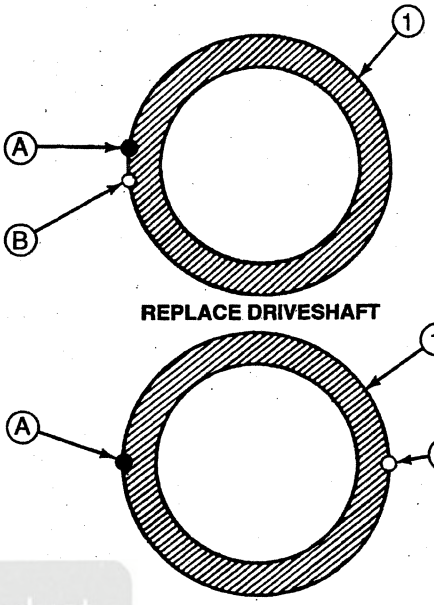

F4595-E

Item	Part Number	Description
1	4602	Driveshaft
A	—	First Runout Mark
B	—	Second Runout Mark

7. Driveshaft balancing involves installing one or two hose clamps on the driveshaft, near the rear end of a one-piece driveshaft. Best positioning of the hose clamp head(s) can be determined by trial-and-error, if special balancing equipment is not available. If transducer-and-strobe equipment is available, refer to Driveshaft Runout and Balance in the Adjustments portion of this section.

Unlicensed Product

DIAGNOSIS AND TESTING (Continued)

8. Mark the rear of the driveshaft into four approximately equal sectors, and number the marks 1 through 4. Install a hose clamp on the driveshaft with its head at position No. 1. Check for vibration at road speed. Recheck with the clamp at each of the other positions, to find the position for minimum vibration. If two adjacent positions show equal improvement, position the clamp head between them.

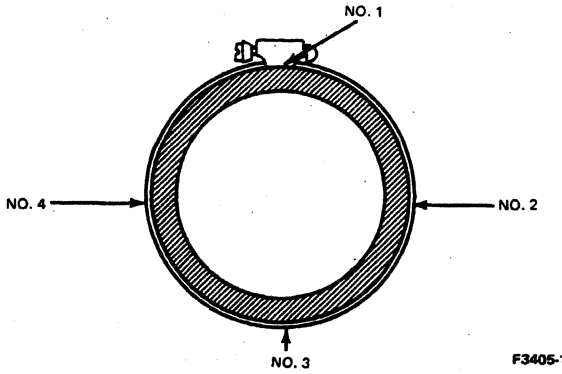

F3405-1A

9. If condition is still not acceptable, add a second clamp at the same position and recheck vibration. If no improvement is noted, rotate the clamps in opposite directions, equal distances from the best position determined in Step 8. Initially, separate the clamp heads about 12 mm (1/2 inch), and recheck vibration at road speed.

   Repeat the process with increasing separation until the best combination is found, or vibration is reduced to an acceptable level.

ADJUSTING CLAMPS

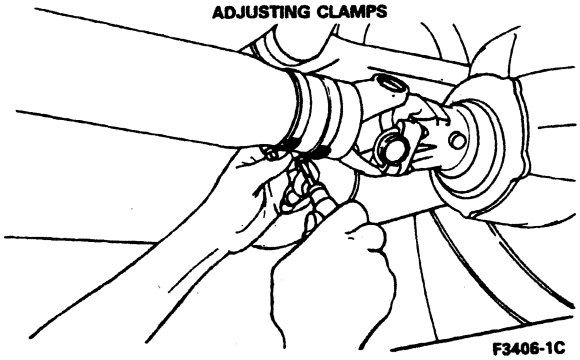
F3406-1C

DETERMINING BEST POSITION FOR CLAMP POSITION

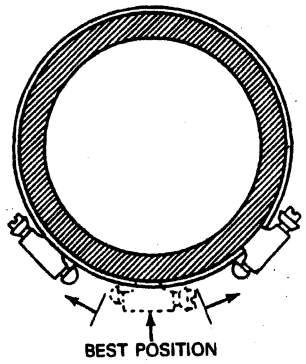

F3407-1B

10. Install wheels and road test, since vibration noticeable on the hoist may not be evident during the road test. If vibration is still not acceptable, replace the rear axle drive line vibration damper (4A263), if so equipped. If road test is not acceptable, check tooth contact pattern. Service as necessary. If tooth contact pattern is OK, replace differential ring gear and pinion (4209).

Driveline Angularity

Driveline angularity is the angular relationship between the engine crankshaft (6303), the driveshaft and the rear axle pinion. Factors determining driveline angularity include ride height (rear spring (5560)) and engine mounts.

Low speed vibration, less than 72 km/h (45 mph), especially when the vehicle is subjected to heavy acceleration or deceleration, is an indication of improper driveline angles. When these conditions exist, check the universal joints for proper seating, mounting and operation.

DIAGNOSIS AND TESTING (Continued)

Driveline Angularity

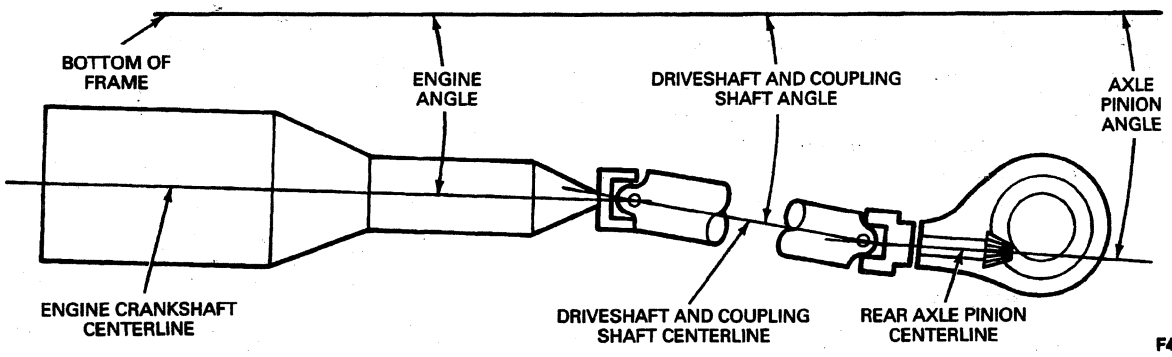

Driveshaft Vibrates

1. Road test vehicle to determine critical vibration points. Note road speed, engine rpm and shift lever positions at which vibration occurs.
2. Stop vehicle and run engine with clutch depressed (automatic transmission in neutral) through critical speed ranges determined in Step 1.
3. With clutch depressed, all potential engine and clutch concerns are eliminated. If vibration persists, the driveshaft must be balanced as described in this section.

Limited Slip Differential

To service limited slip differential, refer to Section 05-02E or Section 05-02B.

In-Vehicle Check

To demonstrate the proper performance of the limited slip differential:

1. Place one wheel on good, dry surface and the other wheel on ice, mud or snow.
2. Gradually open throttle to obtain maximum traction prior to "break-away." The ability to move the vehicle will demonstrate proper performance of a limited slip rear axle assembly.
3. When starting with one wheel on an excessively slippery surface, a slight application of the parking brake may be necessary to help energize the limited slip feature of the differential. Release the brake when traction is established. Use light throttle on starting to provide maximum traction.
4. If, with unequal traction, both wheels slip, the limited slip rear axle has done all it can possibly do.
5. In extreme cases of differences in traction, the wheel with the least traction might spin after the limited slip feature has transferred as much torque as possible to the non-slipping wheel.

Universal Joint Flange Runout Check, Rear Axle

SPECIAL SERVICE TOOL(S) REQUIRED

Description	Tool Number
Gauge Pin	T92T-4851-E
Gauge Pin	T92T-4851-F
Gauge Pin	T92T-4851-G
Companion Flange Runout Gauge	T92T-4851-D

1. Raise the vehicle on a hoist.
2. Remove the driveshaft. Refer to Section 05-01.
3. Check the rear axle universal joint flange for damage to the universal joint bearing locating lugs. If the lugs are shaved (worn) or damaged, replace the rear axle universal joint flange.
4. Insert correct size Gauge Pin, T92T-4851-E, T92T-4851-F or T92T-4851-G.

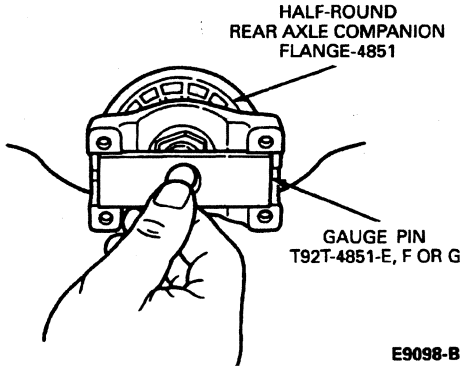

DIAGNOSIS AND TESTING (Continued)

5. Position Companion Flange Runout Gauge T92T-4851-D on gauge pin.

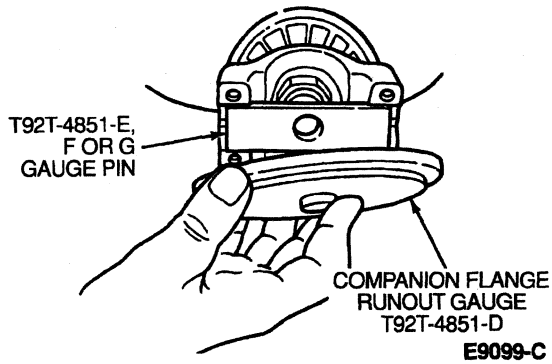

E9099-C

6. Insert two bolts through gauge and rear axle universal joint flange. Install two nuts and hand-tighten.

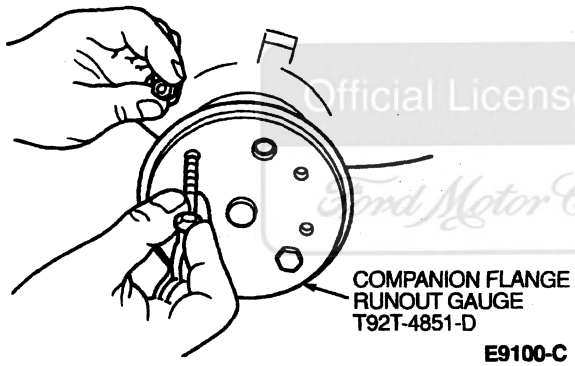

E9100-C

7. NOTE: Accurate tool setup will result in accurate final readings.

   Position Dial Indicator / Magnetic Base D78P-4201-B or equivalent as shown. Adjust and lightly tighten mounting bolts and nuts so gauge runout is 0.254 mm (0.010 inch) or less.

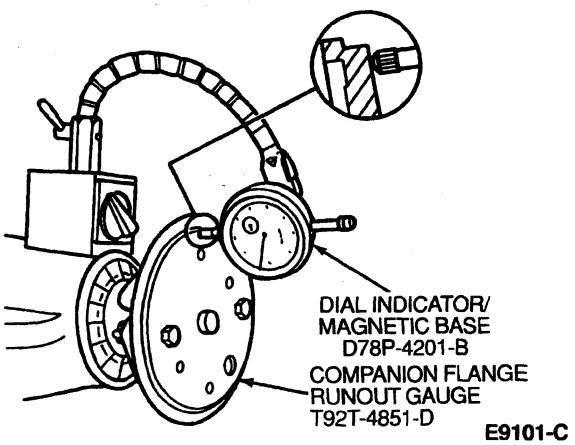

E9101-C

8. Reposition dial indicator on edge of gauge, and turn rear axle companion flange / gauge as shown until high spot is located.

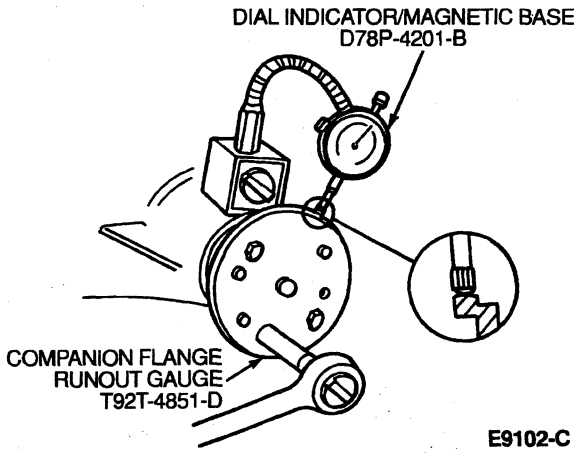

E9102-C

9. **CAUTION: The following operation may disturb the pinion bearing preload. Pinion bearing preload must be reset if the pinion nut is loosened or removed for companion flange reindexing or replacement of rear axle companion flange.**

   Turn companion flange runout gauge as shown to locate and mark high spot on rear axle universal joint flange. If flange runout exceeds 0.254 mm (0.010 inch), remove rear axle universal joint flange, reindex 180 degrees on pinion and reinstall. Check runout again. Rotate the rear axle universal joint flange until an acceptable runout is obtained. If flange runout is still greater than 0.254 mm (0.010 inch), replace rear axle universal joint flange.

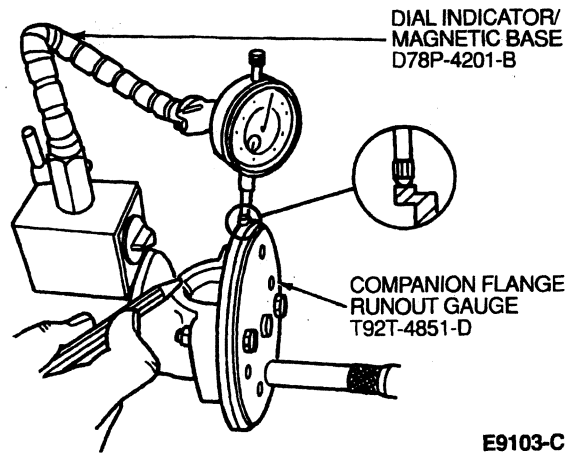

E9103-C

10. If excessive runout is still evident after replacement of the rear axle universal joint flange, it will be necessary to replace the differential ring gear and pinion, and repeat Step 9 until runout is within specification (0.254 mm [0.010 in.]). Refer to Section 05-02C for companion flange replacement procedures.

Official Licensed Product Ford Motor Company

DIAGNOSIS AND TESTING (Continued)

11. Install driveshaft. Refer to Section 05-01.

Gear Tooth Contact Pattern Check

1. When rolling a tooth pattern, use a special marking compound (tube) to obtain gear tooth mesh contact pattern.
2. NOTE: A marking compound mixture that is too wet will run and smear; too dry a mixture cannot be pressed out from between the teeth.

   To check the gear tooth contact, paint the gear teeth with the special marking compound.
3. Rotate ring gear (use a box wrench on the ring gear retaining bolts as a lever) several complete revolutions in both directions or until a clear tooth contact pattern is obtained.
4. Certain types of gear tooth contact patterns on the ring gear indicate incorrect adjustment. Incorrect adjustment can be corrected by readjusting the ring gear or the pinion.

Tooth Patterns

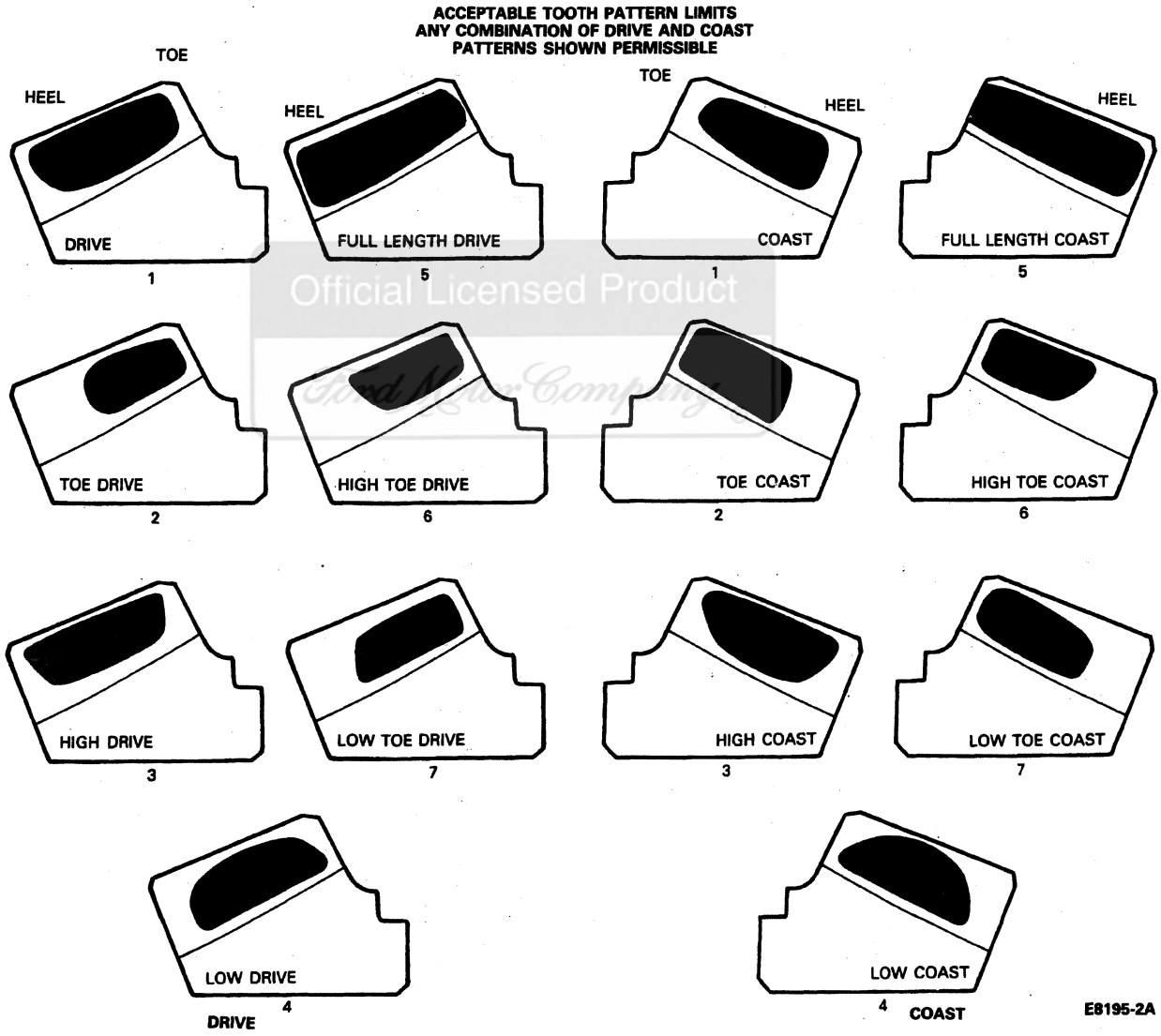

Official Licensed Product
Ford Motor Company

DIAGNOSIS AND TESTING (Continued)

5. The previous illustration shows acceptable tooth patterns for all axles. In general, desirable tooth patterns should have the following characteristics:
   a. The drive pattern should be fairly well centered on the tooth.
   b. The coast pattern should be fairly well centered on the teeth.
   c. Some clearance between the pattern and the top of the tooth is desirable.
   d. There should be no hard lines where the pressure is high.
6. An individual gear set need not conform exactly to the ideal pattern to be acceptable. Any combination of drive and coast patterns shown is acceptable.

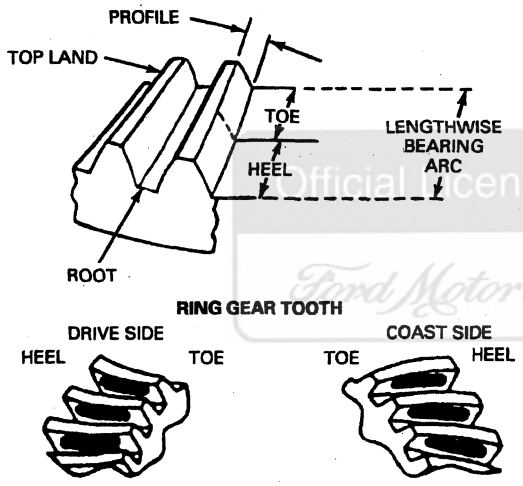

E8196-B

7. NOTE: When making pinion position changes, drive pinion shims should be changed in the range of 0.05 mm (0.002 inch) to 0.10 mm (0.004 inch) until correct pattern has been obtained.

   Since each gear set rolls a characteristic pattern, the patterns shown are considered acceptable and should be used as a guide. The drive pattern is rolled on the convex side of the tooth, and the coast pattern is rolled on the concave side.
8. The movement of tooth contact patterns with changes in shimming can be summarized as follows:
   a. Thinner drive pinion shim, with the backlash set to specification, moves the pinion farther from the ring gear.
   b. Thicker drive pinion shim, with the backlash set to specification, moves the pinion closer to the ring gear.

DRIVE SIDE HEEL TOE	COAST SIDE TOE HEEL	
		THINNER DRIVE PINION SHIM REQUIRED.
		THICKER DRIVE PINION SHIM REQUIRED.

E8197-C

9. NOTE: If the patterns are not correct, make the change as indicated. The differential case (4204) and drive pinion will have to be removed from the carrier housing to change a drive pinion shim.

   If the drive pinion shims are correct, decreasing backlash moves the ring gear closer to the pinion. Drive pattern (convex side of gear) moves slightly lower and toward the toe. Coast pattern (concave side of gear) moves lower and toward the toe. Increasing backlash moves the ring gear away from the pinion. Drive pattern moves slightly higher and toward the heel. Coast pattern moves higher and towards the heel.

DRIVE SIDE HEEL TOE	COAST SIDE TOE HEEL	
		DECREASE BACKLASH.
		INCREASE BACKLASH

E8198-C

Official Licensed Product
Ford Motor Company

DIAGNOSIS AND TESTING (Continued)

10 NOTE Backlash tolerance is 0 13-0 23 mm (0 005-0 009 inch) and cannot vary more than 0 08 mm (0 003 inch) between the three points

NOTE When a change in backlash is required, differential bearing shims should be changed in the range of 1-1/2 times the amount of backlash required to bring the gears into specification For example, if the backlash needed to be changed by 0 10 mm (0 004 inch), the differential bearing shims should be changed by 0 15 mm (0 006 inch) as a starting point The actual amount of backlash change obtained will vary depending upon the ratio and gear size

Check ring gear backlash by installing a dial indicator on the carrier housing Check ring gear and pinion backlash at three equally spaced points on the ring gear

11 If backlash is high, the ring gear must be moved closer to the pinion, by moving differential bearing shims from the drive pinion side of the differential case to the ring gear side If backlash is low, the ring gear must be moved away from the pinion by moving differential bearing shims from the ring gear side to the opposite side

CLEANING AND INSPECTION

Inspection Before Disassembly of Axle

Axle Backlash Check

SPECIAL SERVICE TOOL(S) REQUIRED

Description	Tool Number
Pinion Depth Gauge Set	T79P 4020-A
Clutch Housing Alignment Adapter	T75L 4201-A

The differential case (4204) and drive pinion should be inspected before they are removed from the differential carrier casting These inspections can help determine the cause of the concern and the correction needed

1 Wipe the lubricant from the internal working parts and visually inspect the parts for wear or damage

2 Rotate the gears to see if there is any roughness which would indicate worn or damaged bearings or gears

3 Check the ring gear and pinion teeth for signs of scoring, abnormal wear or nicks/chips

4 NOTE On F-Series vehicles equipped with anti-lock brakes, mount Dial Indicator with Bracketry TOOL-4201-C or equivalent on the carrier so the tip of the dial indicator contacts the backface of the ring gear and pinion There is a space provided between the anti-lock speed sensor ring and the ring gear and pinion for measuring ring gear and pinion backface runout

Set up a dial indicator, and check ring gear and pinion backlash and ring gear and pinion backface runout

5 Proper ring gear and pinion depth must be checked using the Pinion Depth Gauge Set T79P-4020-A which shows correct pinion shim required to ensure acceptable running condition

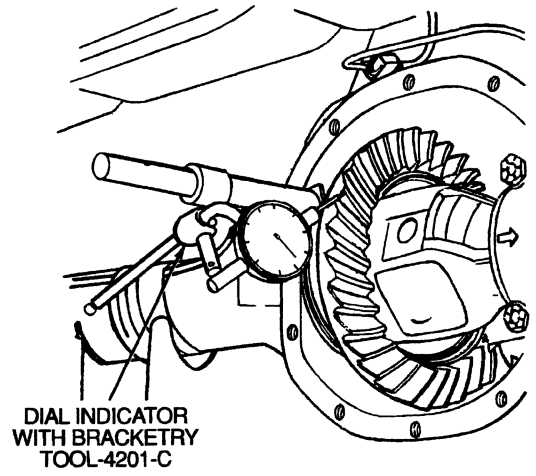

CHECKING REAR AXLE RING GEAR AND PINION BACKLASH

E4972-E

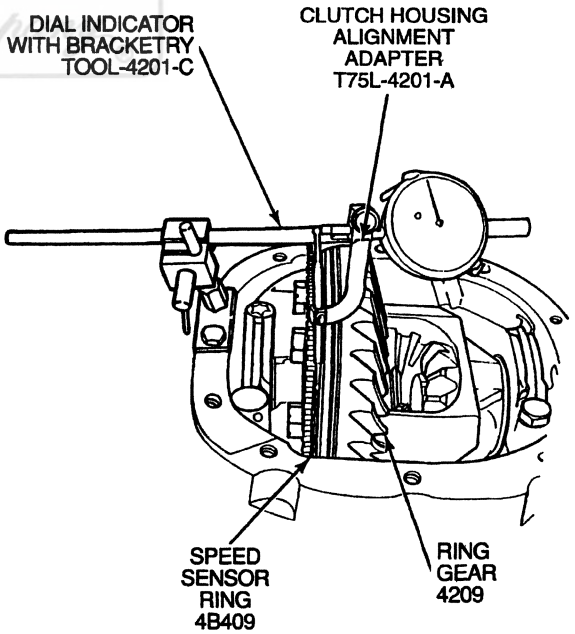

RING GEAR BACKFACE RUNOUT REAR ANTI-LOCK BRAKE VEHICLES DE0492-A

Official Licensed Product Ford Motor Company

CLEANING AND INSPECTION (Continued)

Inspection After Disassembly of the Axle

Thoroughly clean all parts. The pinion seal is fluoroelastomer and must not be cleaned, soaked or washed in cleaning solvents. Always use clean solvent when cleaning bearings. Oil the bearings immediately after cleaning, to prevent rusting. Inspect the parts for wear or damage. If rust is present, remove with a wire brush mounted on a power drill or equivalent. Rinse clean with metal-prep solvent on sponge or rag to remove all particles.

When a scored ring gear and pinion is replaced, the axle housing should be washed thoroughly. Inspect individual parts as described below.

Gears

Examine the teeth of ring gear and pinion for scoring or excessive wear. Worn gears cannot be rebuilt to correct a noisy condition. Gear scoring is the result of excessive shock loading, vehicle loading, or the use of an incorrect lubricant, all of which contribute to the loss of lubricating film between the two gears. Scored gears cannot be reused. Examine the teeth and thrust surfaces of the differential gears. Wear on the hub of the differential side gear (4236) can cause a chucking noise known as chuckle when the vehicle is driven at low speeds. Wear of splines, thrust surfaces or thrust washers can contribute to excessive driveline backlash.

Rear Brake Anti-Lock Sensor

Inspect the rear brake anti-lock sensor for loose metal particles, and clean if required. Note any indication of lubricant leakage through core of rear brake anti-lock sensor or around perimeter. Replace as required.

Anti-Lock Speed Sensor Ring

Examine the anti-lock speed sensor ring and make sure it is firmly pressed on to the differential case (4204). Check it for damaged (dented, chipped or missing) teeth that could result in erratic RABS performance. If damage is found, remove and replace anti-lock speed sensor ring.

Bearing Cups and Cone and Roller Assemblies

Check bearing cups for rings, scores, galling or excessive wear. Pinion bearing cups must be solidly seated in the housing bores. Check for seating by attempting to insert a 0.04-mm (0.0015-inch) feeler gauge between these cups and the bottoms of their bores.

When operated in the bearing cups, cone and roller assemblies must turn without roughness. Examine the large roller ends for wear. If the original blend radius has worn to a sharp edge, the bearing should be replaced.

If inspection reveals either a worn bearing cup or a worn cone and roller, both parts should be replaced to prevent damage.

Universal Joint Flange, Rear Axle

Make sure the surfaces of the rear axle universal joint flange (4851) have not been damaged while removing the driveshaft (4602) or the rear axle companion flange from the rear axle (4001). The end of the rear axle universal joint flange that contacts the front differential pinion bearing inner race or slinger washer, as well as the flat surface of the pinion nut counterbore, must be smooth. Polish these surfaces if necessary. Note also the barrel of the rear axle universal joint flange (half-round) for any damage which could permit the pinion seal to leak. Roughness aggravates backlash noises and causes wear of the rear axle universal joint flange and pinion nut, with a resultant loss in pinion bearing preload.

Differential Housing

Make sure the differential bearing bores are smooth. Remove any nicks or burrs from the mounting surfaces of the differential carrier housing.

Differential Case

NOTE: Care should be taken to prevent damage to the anti-lock speed sensor ring while handling and servicing the differential case.

Make sure the hubs where the bearings mount are smooth. Carefully examine the differential case bearing shoulders, which may have been damaged when the bearings were removed. The bearings will fail if they do not seat firmly against the shoulders. Check the fit (free rotation) of the differential side gears in their counterbores.

Limited Slip Differential Parts

Inspect the differential clutch packs for uneven or extreme wear. The tanged clutch plates must be free from burrs, nicks or scratches which could cause excessive or erratic wear to the internally splined clutch plates. The internally splined clutch plates should be inspected for condition of the material, and wear. Replace the clutch plates if their thickness is less than 1.5 mm (0.058 inch) or if the material is scored or badly worn. Inspect the clutch plate internal teeth for wear. Replace them if excessive wear is evident.

Clutch plates should be replaced as a set only. Examine all thrust surfaces and hubs for wear. Abnormal wear on these surfaces can contribute to a noisy rear axle.

Wheel Bearing and Seal

Opposed pairs of tapered roller bearings are used on all full-floating axles, which are used on vehicles over 8551 GVW. The bearings ride on the axle housing outside the axle shaft (4234).

The wheel seal on full-floating axles is inboard of the inner wheel bearing. It is identified as 1175 on Dana axles and 1177 on Ford 10.25-inch axles. The Dana seal lip runs against the axle spindle, while the Ford seal has internal lips running against the seal internal surface.

Full service procedures for these bearings and oil seals are provided in Section 05-02B (10.25-inch ring gear) or Section 05-02C (Dana axle).

ADJUSTMENTS

Axles

Certain rear axle (4001) and driveline concern symptoms are also common to the engine (6007), transmission (7003), rear wheel bearings (1225), tires, and other parts of the vehicle. For this reason, make sure the cause of the concern is in the rear axle before adjusting, servicing or replacing any of the parts. Refer to Section 00-04 in the Body, Chassis Manual.

U-Joint Phasing

When U-joint yokes are assembled to their shafts in the same plane, they are in phase. When they are assembled to the shafts in different planes, they are out of phase.

To obtain vibration-free operation, check and correct as necessary.

NOTE: On vehicles with a slip spline on the last coupling shaft, the yoke, which is part of the driveshaft slip yoke (4841), should be considered part of the coupling shaft.

Mark splined driveline components prior to disassembly to make sure that they have the same relative orientation when reassembled.

U-Joint Phasing

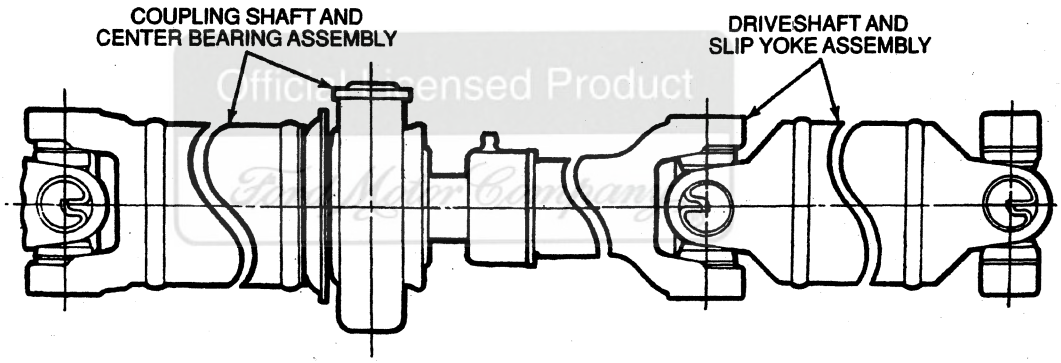

E3670-E

Driveline Support Plate Position, Adjustable

Refer to Section 05-01.

Driveshaft Alignment

Refer to Section 05-01.

Driveline Angle Correction

Coupling Shaft Angle Adjustment

Check coupling shaft angle (if so equipped) and adjust to specification by shimming the driveshaft center bearing support (4800).

Driveshaft and Pinion Angle Adjustment

Check the driveshaft angle and adjust to specifications by shimming between the rear springs (5560) and the rear axle spring seats.

Adjust the pinion angle by placing tapered shims between the rear springs and spring seats. On F-250 Heavy Duty, F-350 and F-Super Duty Chassis Cab, a 76.2-mm (3-inch) wide shim (Part No. C6TZ-5A313-B or equivalent) is available for a 3-degree change. For F-Super Duty Motorhome, a 101.1-mm (4-inch) wide shim is required.

ADJUSTMENTS (Continued)

Engine Angle Adjustments

The engine angle is adjusted by normalizing the engine mounts. The engine mounts are normalized by loosening the engine mount nuts to frame. Raise the driveshaft (4602) off the frame, then lower the driveshaft and let it settle into place. Service any damaged mounts at this time. Tighten all fasteners to the specified torque. Recheck the engine angle. If the angle is still out of specification, place shims under the transmission-to-rear crossmember mount until the specified angle is obtained.

Driveshaft Runout and Balance

Vibration or shudder which is noticeable either on fast acceleration, when coasting, or when using the engine (6007) for braking, may be caused by the rear axle housing (4010) being loose on the rear suspension, improper tire balance, improper driveline installation or driveline balance.

If driveshaft components are replaced and shaft vibration is encountered after installation, disconnect and remove the driveshaft (4602). Rotate the rear axle universal joint flange (4851) 180 degrees then reconnect the driveshaft to the driveshaft slip yoke (4841) and reinstall in vehicle. If the vibration persists, disconnect the driveshaft at the rear axle universal joint flange. Rotate the rear axle universal joint flange 180 degrees and reconnect the driveshaft to the rear axle universal joint flange.

If rotating the driveshaft 180 degrees does not eliminate vibration, the driveshaft can be balanced using the following procedure:

1. Raise the vehicle on a twin-post hoist so that both the front and rear axles are safely supported with all wheels free to rotate.
2. Remove the rear wheels and tires. Reinstall lug nuts (1012) to retain brake drums or rotors.
3. With the transmission (7003) in gear, increase the vehicle speed to the maximum vibration level. Note and record the speed of this vibration period as a baseline speed.
4. Check the attachment of all rear axle shaft universal joint bearing caps of the driveshaft to the transmission yoke for improper installation or damaged rear axle shaft universal joint bearing cap locating lugs. All yokes with worn, shaved, or damaged locating lugs must be replaced.

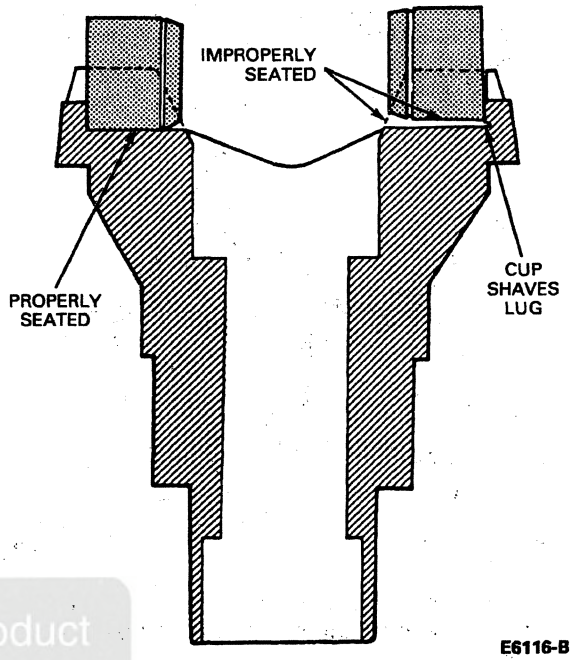

E6116-B

5. **WARNING: USE CAUTION WHEN CHECKING THE DRIVESHAFT NEAR THE BALANCE WEIGHTS TO PREVENT INJURY TO THE HANDS.**

   With the transmission in gear, run the vehicle with the driveshaft rotating at a speedometer speed of 64-80 km/h (40-50 mph); have an assistant carefully bring a crayon, piece of chalk or colored pencil up until it just barely contacts the rear end, center and front end of the driveshaft. The chalk marks will indicate the heavy side of the driveshaft.

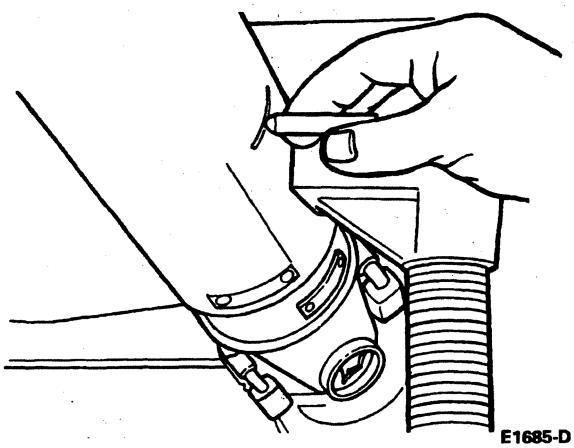

E1685-D

ADJUSTMENTS (Continued)

6. Install two screw-type hose clamps on the driveshaft so that their heads are located 180 degrees from the chalk mark, starting at the pinion yoke end of the driveshaft. Tighten the clamps.

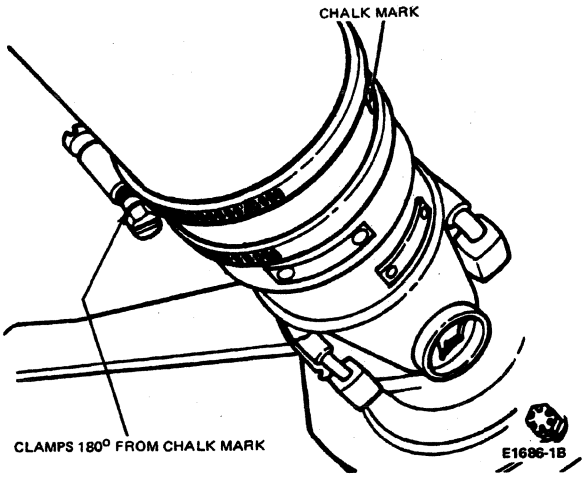

7. **CAUTION: To prevent overheating, do not run the vehicle on the hoist for an extended period.**

   Run the vehicle up to the baseline speed. If vibration is still evidenced, rotate the clamps approximately 45 degrees away from each other and test for correction of vibration.
8. If necessary, continue to rotate the clamps apart in smaller increments until the vibration is eliminated or begins to be reduced.
9. If the vibration is not completely eliminated, repeat Steps 1-8 and balance the front end of the driveshaft, checking for elimination or reduction in the vibration level.
10. Reinstall wheels and tires.
11. Remove the vehicle from the hoist and road test.

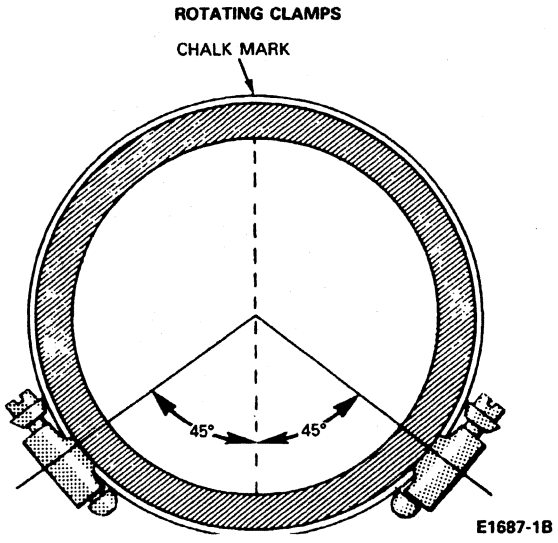

Alternate Procedure

1. Road test. Evaluate and record road speed at which vibration occurs.
2. Raise vehicle on a frame contact hoist. Remove the wheels and tires. Reinstall lug nuts to retain brake drums or rotors. Re-evaluate by starting the engine, engaging the transmission and accelerating to the indicated speeds at which the vibration was most severe during the road test. Suspending the rear axle (4001) makes the driveline more sensitive to vibration.
3. Disconnect the driveshaft from the rear axle universal joint flange. Rotate the driveshaft 180 degrees from its original position and reinstall. Repeat Step 2.

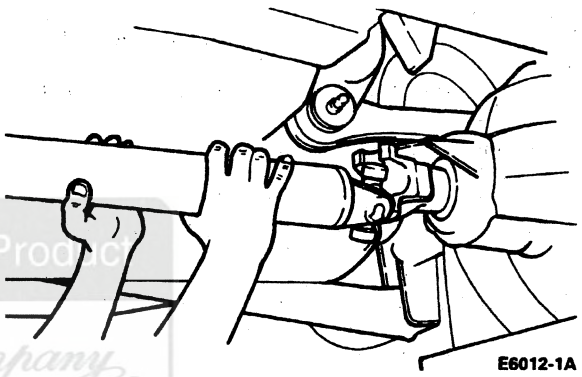

4. In some cases, rotating the driveshaft 180 degrees can decrease the vibration to an acceptable level. However, if the vibration level is increased, install the driveshaft in its original position and proceed to Step 5.
5. A vehicle is more sensitive to imbalance or runout at the rearward end of the driveshaft. Therefore, locate the heavy side of the driveshaft by the use of Rotunda Electronic Strobe Balancer 006-01400 or equivalent as follows:
   a. Scribe an axial chalk line (at any radial location) approximately 101.6 mm (4 inches) long at the rear of the driveshaft.
   b. Locate the transducer on the bottom side of the carrier, and secure it in place.

Unlicensed Product

ADJUSTMENTS (Continued)

c. Run the engine and driveline at the worst vibration speed noted and visually note the position of the chalk line by use of the strobe light. This provides a starting point for the initial location of the clamps.

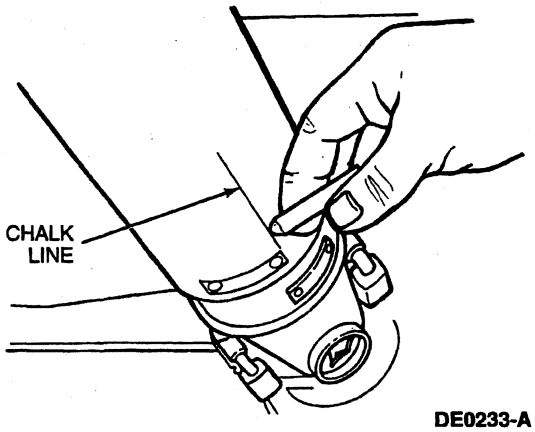

DE0233-A

LOCATING TRANSDUCER

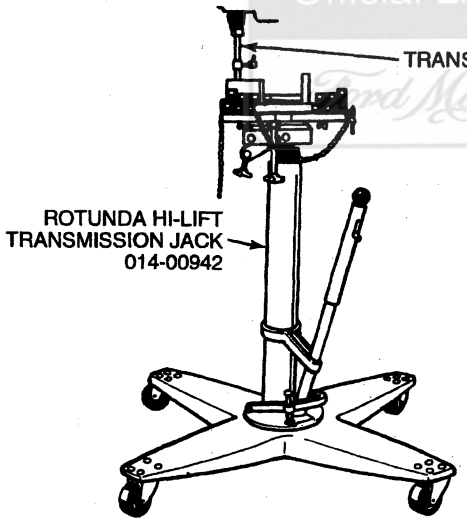

DE0493-A

6. Stop the engine and rotate the driveshaft so the chalk line is in the same location as it was noted under the strobe light.
7. Install two (stainless steel) hose clamps on the driveshaft. Position the clamp heads 180 degrees from the chalkline and tighten the clamps.

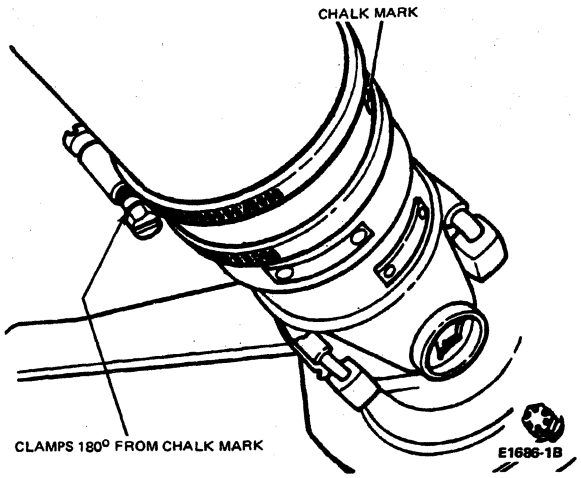

8. **CAUTION: Do not run the engine with the transmission engaged on the hoist for extended periods due to the danger of overheating the engine or transmission.**

   Run the engine and driveline through the speed range. If no vibration is felt, remove the lug nuts, install the wheels and tires and reinstall the lug nuts in the correct position and proceed to Step 10. If any vibration still exists, the combined weight of the two hose clamp heads may be in excess. To reduce this excess weight, rotate the clamp heads away from each other approximately 15 degrees (one each way from the original position). Run the engine and driveline and note if the vibration has been reduced.
9. Continue to rotate the clamp heads apart in smaller angular increments until the vehicle feel of balance (vibration) is best. At this point, install the wheels and tires according to Step 8 and road test the vehicle to determine the actual degree of improvement. If satisfactory improvement has been obtained, proceed with Step 10. If no improvement has been obtained, the clamps must be removed and diagnosis should be redirected to other areas, such as wheels, tires, driveline angle and rear axle universal joint flange runout. For additional information, refer to Diagnosis and Testing in this section or Section 00-04 in the Body, Chassis Manual.
10. When the vehicle has been corrected to a satisfactory level, as determined by a road test evaluation, tighten the clamps securely. Clean thoroughly with lacquer thinner, and spray the clamps with a commercially available black paint for a finished appearance.

Pinion and Ring Gear Adjustment

Two separate adjustments affect pinion and ring gear tooth contact. They are pinion location and backlash.

Official Licensed Product
Ford Motor Company

ADJUSTMENTS (Continued)

Individual differences in matching the rear axle housing (4010) and the differential pinion bearings (4630) require the use of shims to locate the pinion for correct contact with the ring gear. Refer to appropriate axle section in Group 05 for shim selection procedures.

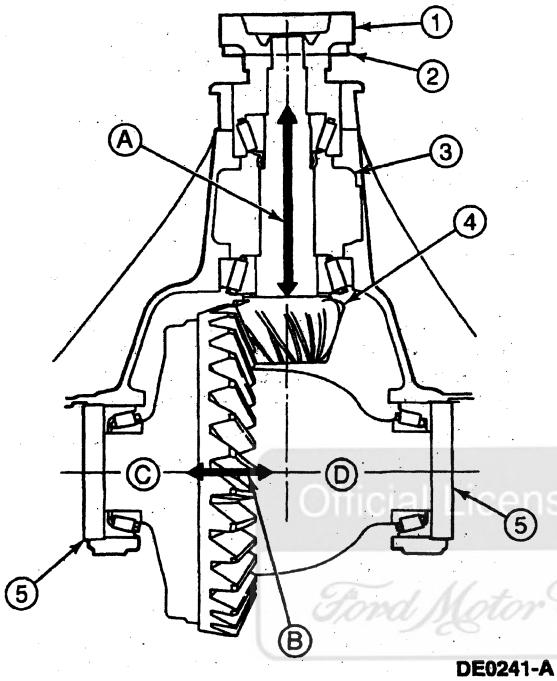

DE0241-A

Item	Part Number	Description
1	4851	Rear Axle Universal Joint Flange
2	4859	Drive Pinion Oil Seal Deflector
3	4662	Differential Drive Pinion Collapsible Spacer
4	4663	Drive Pinion Bearing Adjustment Shim
5	4067	Differential Bearing Shim
A	—	Pinion Location Adjustment
B	—	Backlash Adjustment
C	—	Increase Backlash
D	—	Decrease Backlash

Slip Yoke Spline

Vehicle noise and vibration can be caused by a seized driveshaft slip yoke (4841) spline resulting in the rubber isolator being pulled out of the driveshaft center bearing bracket (4A499).

The service resolution to minimize driveshaft slip yoke spline contamination and ultimate seizure is as follows:

1. Disconnect the driveshaft (4602) from the rear axle yoke and remove it from the truck.
2. Clean the male splines of the coupling shaft using care not to damage the plastic coating. Fine abrasive cloth may be required to dress and polish the male spline. Remove all hardened grease deposits, dirt or rust. Inspect for worn or galled splines. The plastic coating on the stub spline must not be removed. Replace coupling shaft if necessary.
3. Clean and inspect the female splines of the driveshaft slip yoke, removing any hardened grease deposits, dirt or rust. Inspect splines for worn or galled conditions, replace driveshaft slip yoke if necessary.
4. Apply a coating of Premium Long-Life Grease XG-1-C or -K or equivalent meeting Ford specification ESA-M1C75-B to the entire splined stub end of the coupling shaft prior to the assembling of the driveshaft to the coupling shaft.
5. Using a clean, long handle (stencil-type) brush apply Premium Long-Life Grease XG-1-C or -K or equivalent meeting Ford specification ESA-M1C75-B, spread evenly on all the female splines of the slip yoke. The spline joint must slide freely by hand.
6. Assemble the driveshaft to the coupling shaft with the yokes phased properly. Attach driveshaft to rear axle yoke.
7. Using a hand-type grease gun, lubricate the driveshaft slip yoke through the grease fitting with Premium Long-Life Grease XG-1-C or -K or equivalent meeting Ford specification ESA-M1C75-B.

LUBRICATION

Axle Lubrication, Rear

The ability of any rear axle (4001) to deliver quiet, trouble-free operation over a period of years is largely dependent upon the use of good quality gear lubricants. To make sure gears and bearings will last as long as possible, use only specified hypoid gear lubricants.

Dana and Ford rear axles use Premium Rear Axle Lubricant XY-80W90-QL or -KL or equivalent meeting Ford specification WSP-M2C197-A.

NOTE: Unless axle was submerged in water, axles filled with Synthetic Lubricant are lubricated for the life of the vehicle.

It is recommended that the lube be replaced in all rear axles at 100,000 mile intervals, or if the rear axle has been submerged in water, or more often under certain extreme conditions. High Performance Synthetic 75W140 Rear Axle Lubricant F1TZ-19580-B or equivalent meeting Ford specification WSL-M2C192-A is available for service and refills in situations that fall into the severe or extreme use categories. Refer to maintenance schedules in the maintenance schedule booklet.

Official Licensed Product
Ford Motor Company

LUBRICATION (Continued)

Dana front drive axles have different lubrication requirements for different applications.

- F-250 Heavy Duty requires WSL-M2C191-A (F1TZ-19580-A)
- F-350 requires WSP-M2C105-A (SAE90W)

Draining and Filling

Ford Rear Axle

Service fill for F-250 Heavy Duty and F-350 with Ford axles is level with bottom of filler hole.

NOTE: To check F-250 Heavy Duty and F350 rear axles (4001) for proper lubricant level, the filler plug should be backed out slowly. If seepage occurs around the threads of the plug, immediately turn the plug back in to avoid any drainage. This condition indicates that the specified factory fill amount of lubricant is in the rear axle.

Dana Rear Axles

Dana rear axles do not have a drain plug. The axle housing cover (4033) should be loosened and removed from the axle housing to allow drainage. The RTV sealer must be removed from the axle housing cover and axle housing. Reseal with Silicone Rubber F4AZ-19562-B or equivalent meeting Ford specification WSE-M4G323-A1.

The lubricant level in these axles may vary depending on internal casting variations, spring orientation, or flatness of the floor or hoist involved, as well as the amount of fill. During manufacture, axles are filled by volume, not to a specific level. Dealer inspection of rear axle lubricant level is not an authorized element of vehicle preparation. The only times a dealer should check lubricant levels are when a leak is suspected or observed or when an axle service requires draining and refilling.

NOTE: A suction pump can also be used for draining lube from the axle housing. Note that this method will not clean all debris which may settle at the bottom of the carrier.

These Dana rear axles have a proper lubricant fill level of 6.35-19.05 mm (1/4-3/4 inch) below the bottom of the fill hole in the axle housing cover. Dealers should avoid overfilling the rear axle above this range because overfilling can cause foaming and raise the temperature of the lubricant, leading to lubricant oxidation and eventual gear or bearing failure in extreme cases. The extra lubricant may also be expelled through the rear axle vent hose.

U-Joints

Lubricate U-joint through grease fitting, using Premium Long Life Grease XG-1-C or -K or equivalent meeting Ford specification ESA-M1C75-B.

Slip Yoke

Refer to Slip Yoke Spline in the Adjustments portion of this section.

SPECIFICATIONS

LUBRICANT/ADHESIVE/CLEANER SPECIFICATIONS

Description	Part Number	Ford Specification
Pipe Sealant with Teflon®	D8AZ-19554-A	WSK-M2G350-A2
Premium Long-Life Grease	XG-1-C or -K	ESA-M1C75-B
Premium Rear Axle Lubricant	XY-80W90-QL or -KL	WSP-M2C197-A
High Performance Synthetic 75W-140 Rear Axle Lubricant	F1TZ-19580-B	WSL-M2C192-A
Silicone Rubber	F4AZ-19562-B	WSE-M4G323-A1
Ford Friction Modifier	C8AZ-19B546-A	EST-M2C118-A
4x4 Gear Oil	F1TZ-19580-A	WSL-M2C191-A

SPECIFICATIONS (Continued)

FRONT AND REAR AXLE LUBRICANT SPECIFICATIONS AND CAPACITIES

Axle Model	Vehicle	Approximate Capacity		
		Liters	U.S. Pints	Imperial Pints
Ford Axle — 10.25-Inch Ring Gear[a]	F-250, F-350 (4x2 and 4x4) — Dual Rear Wheels	3.5	7.4	6.1
Ford Axle — 10.25-Inch Ring Gear[a]	F-250, F-350 (4x4)	3.5	7.4	6.1
Dana 50 IFS — Front[b]	F-250 (4x4) HD	1.8	3.8	3.2
Dana 60 — Front[c]	F-350 (4x4)	2.8	5.9	4.9
Dana 80 — Rear[c]	F-Super Duty Chassis Cab and Motorhome Chassis	3.9	8.25	6.8

a Use Premium Rear Axle Lubricant XY-80W90-QL or -KL or equivalent meeting Ford specification WSP-M2C197-A. Add 8 oz of Ford Friction Modifier C8AZ-19B546-A or equivalent meeting Ford specification EST-M2C118-A to Ford 10.25-inch ring gear limited slip axles. Service refill capacities are determined by filling the rear axle to the bottom of the filler hole.
b Use 4x4 Gear Oil F1TZ-19580-A or equivalent meeting Ford specification WSL-M2C191-A.
c Use Premium Rear Axle Lubricant XY-80W90-QL or -KL or equivalent meeting Ford specification WSP-M2C197-A. Add 8 U.S. ounces of Ford Friction Modifier C8AZ-19B546-A or equivalent meeting Ford specification EST-M2C118-A.

DANA 50 AXLE ADJUSTMENTS

Description	Specification
Drive Pinion Preload	2.25-3.4 N·m (20-30 Lb-In)
Ring Gear Backlash	0.13-0.23 mm (0.005-0.009 Inch). No More than 0.08 mm (0.003 Inch) Variation in Any Three Places
Differential Gear — Torque-to-Turn	Less than 3.4 N·m — (30 Lb-In)

DANA 60 AXLE ADJUSTMENTS

Description	Specification	
	mm	Inch
Backlash Between Ring Gear and Pinion	0.13-0.23	0.005-0.009
Backlash Maximum Variation Between Teeth	0.05	0.002
Pinion Bearing Preload (with New Bearings)	2.25-4.52 N·m	20-40 Lb-In

REAR DRIVELINE ANGLES, F-250 HEAVY DUTY 4x2 (CURB LOAD)

Model	Wheel Base	Engine (L)	Transmission	Rear Spring	Rear Axle		Blocked Ride Height (mm)	Engine Angle (Deg.)	Coupling Shaft Angle (Deg.)	Rear Drive-shaft Angle (Deg.)	Pinion Angle (Deg.)
					Axle Ratio	GVW Capacity					
REG. CAB	3378	4.9/5.0	M5OD	F4TA-KB	3.55 4.10	5300	190.64	5.5	—	7.0	7.2
REG. CAB	3378	4.9/5.0	M5OD	F4TA-KB	3.55 4.10	5300	190.64	5.5	5.3	8.3	7.2
REG. CAB	3378	4.9	M5HD[a]	F4TA-KB	3.55 4.10	5300	190.64	5.5	5.4	8.3	7.2
REG. CAB	3378	4.9/5.8	E4OD	F4TA-KB	3.55 4.10	5300	190.64	5.5	—	7.1	7.2
REG. CAB	3378	5.0	4R70W	F4TA-KB	3.55 4.10	5300	190.64	5.5	—	7.0	7.2
HD REG. CAB	3378	4.9/5.8/ 7.5	M5HD[a]	F3TA-TA	3.55 4.10	6250	199.07	5.5	5.4	10.0	6.3
HD REG. CAB	3378	7.3	M5HD[b]	F3TA-TA	3.55 4.10	6250	199.07	5.5	5.4	10.3	6.3
HD REG. CAB	3378	5.0/7.3/ 7.5	E4OD	F3TA-TA	3.55 4.10	6250	199.07	5.5	—	8.1	6.3
HD REG. CAB	3378	5.8/7.5	M5HD[a]	E4TA-SA	3.55 4.10	6250	173.35	5.5	5.4	9.5	5.9

(Continued)

SPECIFICATIONS (Continued)

REAR DRIVELINE ANGLES, F-250 HEAVY DUTY 4x2 (CURB LOAD) (Cont'd)

Model	Wheel Base	Engine (L)	Transmission	Rear Spring	Rear Axle		Blocked Ride Height (mm)	Engine Angle (Deg.)	Coupling Shaft Angle (Deg.)	Rear Drive-shaft Angle (Deg.)	Pinion Angle (Deg.)
					Axle Ratio	GVW Capacity					
HD REG. CAB	3378	7.3	M5HD[b]	E4TA-SA	3.55 4.10	6250	173.35	5.5	5.4	9.5	5.9
SUPER CAB	3937	5.8/7.3/7.5	E4OD	F3TA-TA	3.55 4.10	6250	199.07	5.5	4.4	8.2	6.3
SUPER CAB	3937	5.8/7.5	M5HD[a]	F3TA-TA	3.55 4.10	6250	199.07	5.5	4.6	8.0	6.3
SUPER CAB	3937	7.3	M5HD[b]	F3TA-TA	3.55 4.10	6250	199.07	5.5	4.7	8.0	6.3
SUPER CAB	3937	5.8/7.5	M5HD[a]	E4TA-SA	3.55 4.10	6250	173.35	5.5	4.6	7.7	5.9
SUPER CAB	3937	7.3	M5HD[b]	E4TA-SA	3.55 4.10	6250	173.35	5.5	4.7	7.7	5.9

a Wide ratio/close ratio.
b Close ratio.

REAR DRIVELINE ANGLES, F-250 HEAVY DUTY 4x4 (CURB LOAD)

Wheel Base	Engine (L)	Transmission	Rear Spring	Rear Axle		Blocked Ride Height (mm)	Engine Angle (Deg.)	Coupling Shaft Angle (Deg.)	Rear Drive-shaft Angle (Deg.)	Pinion Angle (Deg.)
				Axle Ratio	GVW Capacity					
3937	5.8/7.3/7.5	E4OD	F2TA-VB	3.55/4.10[a]	6250	229.7	5.5	7.9	9.2	7.0
3937	5.8	M5HD[b]	F2TA-VB	3.55/4.10[a]	6250	229.7	5.5	7.7	9.2	7.0
3937	7.3/7.5	M5HD[c]	F2TA-VB	3.55/4.10[a]	6250	229.7	5.5	7.5	9.4	6.7
3378	5.8/7.5	M5HD[b]	E3TA-TA	3.55/4.10[a]	6250	213.4	5.5	—	11.4	6.7
3378	7.3/7.5	E4OD	E3TA-TA	3.55/4.10[a]	6250	213.4	5.5	—	11.8	6.7
3378	7.3	M5HD[b]	F3TA-TA	3.55/4.10[a]	6250	213.4	5.5	—	11.2	6.7

a 7.3L Diesel — 4.10 only.
b Wide ratio/close ratio.
c Close ratio.

REAR DRIVELINE ANGLES, F-350 4x4 (CURB LOAD)

Wheel Base	Engine (L)	Transmission	Rear Spring	Rear Axle		Blocked Ride Height (mm)	Engine Angle (Deg.)	Coupling Shaft Angle (Deg.)	Rear Drive-shaft Angle (Deg.)	Pinion Angle (Deg.)
				Axle Ratio	GVW Capacity					
3378	5.8/7.3/7.5	E4OD	F3TA-TA	3.55/4.10	6250	183.92	5.5	—	11.2	5.9
3378	5.8/7.5	M5HD[a]	F3TA-TA	3.55/4.10	6250	183.92	5.5	—	10.9	5.9
3378	7.3	M5HD[b]	F3TA-TA	3.55/4.10	6250	183.92	5.5	—	10.7	5.9

a Wide ratio/close ratio.
b Close ratio.

Official Licensed Product

SPECIFICATIONS (Continued)

REAR DRIVELINE ANGLES, F-350 4x2

Model	Wheel Base	Engine (L)	Transmission	Rear Spring	Rear Axle		Blocked Ride Height (mm)	Engine Angle (Deg.)	Coupling Shaft Angle (Deg.)	Rear Drive-shaft Angle (Deg.)	Pinion Angle (Deg.)
					Axle Ratio	GVW Capacity					
REG. CAB	3378	5.8/7.3/ 7.5	E4OD	E4TA-SA	4.10	7400	173.35	5.5	—	8.0	5.9
REG. CAB	3378	5.8/7.5	M5HD[a]	E4TA-SA	4.10	7400	173.35	5.5	5.4	9.3	5.9
REG. CAB	3378	7.3	M5HD[b]	E4TA-SA	4.10	7400	173.35	5.5	5.4	9.3	5.9
CREW CAB	4278	5.8/7.3/ 7.5	E4OD	F3TA-TA	4.10	6250	199.07	5.5	4.4	6.1	6.3
CREW CAB	4278	5.8/7.3/ 7.5	M5HD	F3TA-TA	4.10	6250	199.07	5.5	4.6	6.0	6.3
CHAS. CAB	3475	5.8/ 7.3/7.5	M5HD[a]	F4TA-HA	4.10	8250	156.74	5.5	5.3	7.3	4.6
CHAS. CAB	3475	5.8/7.3/ 7.5	E4OD	F4TA-HA	4.10	8250	156.74	5.2	5.2	7.4	4.6
CHAS. CAB	3475	7.3	M5HD[b]	F4TA-HA	4.10	8250	156.74	5.5	5.4	7.3	4.6
CHAS. CAB	4085	7.3/7.5	M5HD[a]	F4TA-HA	4.10	8250	156.74	5.5	4.4	5.7	4.6
CHAS. CAB	4085	5.8/7.3/ 7/5	E4OD	F4TA-HA	4.10	8250	156.74	5.5	4.0	5.8	4.6
CHAS. CAB	4085	7.3	M5HD[b]	F4TA-HA	4.10	8250	156.74	5.5	4.4	5.7	4.6
SUPER CAB	3937	7.3/7.5	E4OD	F3TA-TA	4.10	7400	199.07	5.5	4.4	8.2	6.3
SUPER CAB	3937	7.3	M5HD[b]	F3TA-TA	4.10	7400	199.07	5.5	4.7	8.1	6.3
SUPER CAB	3937	7.3/7.5	M5HD[a]	F3TA-TA	4.10	7400	199.07	5.5	4.8	8.1	6.3

a Wide ratio.
b Close ratio.

Official Licensed Product Ford Motor Company

REAR DRIVELINE ANGLES, F-SUPER DUTY (CURB LOAD)

Wheel Base	Engine (L)	Transmission	Rear Spring	Rear Axle		Blocked Ride Height (mm)	Engine Angle (Deg.)	Coupling Shaft Angle (Deg.)	Rear Drive-shaft Angle (Deg.)	Pinion Angle (Deg.)
				Axle Ratio	GVW Capacity					
3475	7.3	M5HD	F4TA-HA	4.10 4.63 5.13	11000	156.74	5.5	—	—	4.6
3475	7.3/7.5	E4OD	F4TA-HA	4.10 4.63 5.13	11000	156.74	5.5	—	—	4.6
4085	7.3	M5HD	F4TA-HA	4.10 4.63 5.13	11000	156.74	5.5	—	—	4.6
4085	7.3/7.5	E4OD	F4TA-HA	4.10 4.63 5.13	11000	156.74	5.5	4.0	5.6	4.6
3475	7.5	M5HD[a]	F4TA-HA	4.10 4.63 5.13	11000	156.74	5.5	5.3	7.3	4.6

(Continued)

SPECIFICATIONS (Continued)

REAR DRIVELINE ANGLES, F-SUPER DUTY (CURB LOAD) (Cont'd)

Wheel Base	Engine (L)	Transmission	Rear Spring	Rear Axle		Blocked Ride Height (mm)	Engine Angle (Deg.)	Coupling Shaft Angle (Deg.)	Rear Drive-shaft Angle (Deg.)	Pinion Angle (Deg.)
				Axle Ratio	GVW Capacity					
4085	7.5	M5HD[b]	F4TA-HA	4.10 4.63 5.13	11000	156.74	5.5	4.4	5.4	4.6

a Close ratio.
b Wide ratio / close ratio.

REAR DRIVELINE ANGLES, F-SUPER DUTY MOTORHOME CHASSIS

Wheel Base	Engine (L)	Transmission	Rear Spring	Rear Axle		Blocked Ride Height (mm)	Engine Angle Degree	1st Coupling Shaft Angle (Deg.)	2nd Coupling Shaft Angle (Deg.)	Rear Driveshaft Angle (Deg.)	Pinion Angle (Deg.)
				Ring Gear	GVW Capacity						
178	7.5	E4OD	E9TD-AE	11.25	11000	171	5.5	4.4	N/A	5.7	3.4
190	7.5	E4OD	E9TD-AE	11.25	11000	171	5.5	4.4	N/A	4.6	3.4
208	7.5	E4OD	E9TD-AE	11.25	11000	171	5.5	4.1	3.0	4.8	3.4
228	7.5	E4OD	E9TD-AE	11.25	11000	171	5.5	3.7	2.3	4.3	3.4

Official Licensed Product

FRONT DRIVESHAFT, F-250 HEAVY DUTY AND F-350 4x4 (CURB LOAD)

Ford Motor Company

Model	Wheelbase	Engine (L)	Transmission	Front Axle		Engine Angle (Degrees)	Front Driveshaft Angle (Degrees)	Pinion Angle (Degrees)
				Type	GVW Capacity			
F-250 Heavy Duty	All	All	E4OD S5-47ZF	Twin I-Beam w/Leaf Spring	4600 Lb	5.5 5.5 5.5 5.5 5.5	2.79 2.77 2.69 2.54 2.06 2.45	6.73 6.73 6.73 6.73 6.73
F-350	All	All	All	Mono-Beam	5000 Lb	5.5	2.50	4.50

DRIVE PINION BEARING PRELOAD

Description	N·m	Lb-In
Pinion Bearing Preload — 10.25-Inch Axle		
— Used Bearings[a]	0.9-1.5	8-14
— New Bearings[a]	1.8-3.3	16-29
Pinion Bearing Preload — Dana (Front Model 50)	2.25-3.40	20-30
Pinion Bearing Preload — Dana (Front Model 60 and Rear Axles)		
— New Bearings	2.25-4.52	20-40
— Total (Pinion Plus Differential) Preload (Model 80)	[b]	[b]

a With pinion seal installed.
b Add 0.5-1 N·m (6-9 lb-in), depending on ratio, to pinion preload.

RING GEAR BACKLASH

Description	mm	Inches
Backlash Between Ring Gear and Pinion Teeth		
— 10.25-Inch Axle[a]	0.20-0.38	0.008-0.015
— Dana Rear Axle (Model 80)	0.13-0.20	0.005-0.008
— Dana Front Axles (All)	0.13-0.23	0.005-0.009
Backlash Maximum Variation Between Checkpoints		
— 10.25-Inch Axle	0.101	0.004
— Dana Rear Axle (Model 80)	0.05	0.002
— Dana Front Axles (Model 50)	0.08	0.003
— Dana Front Axle (Model 60 Monobeam)	0.05	0.002

a 0.30-0.38 mm (0.012-0.015-inch) preferred.

SPECIFICATIONS (Continued)

RING GEAR RUNOUT

Description	mm	Inches
Maximum Runout of Back Face of Ring Gear — All	0.101	0.004

TORQUE SPECIFICATIONS — DRIVESHAFT

Description	Bolt Size	Torque Limits	
		N·m	Lb-Ft
Bolt Yoke to Coupling Shaft	5/8-18 3/4-16 7/8-14 1-2	201-222[a] 238-325 339-406 216	148-164[a] 175-240 250-300 160
Nut — Rear Axle Shaft Universal Joint Kit — U-Bolt	5/16-18 3/8-16 7/16-20	11-20 24-35 41-54	8-15 18-26 30-40
Coupling Shaft Driveshaft Center Bearing Bracket-to-Driveshaft Center Bearing Support	7/16-14	51-73	38-54
Bolt — Driveshaft to Rear Axle Universal Joint Flange	1/2-20	123-149	91-110
Bolt and Nut — Rear Axle Shaft Universal Joint	1/2-20	82-94	61-70
Double Cardan Driveshaft and Coupling Shaft-to-Transfer Case Bolts	5/16-24	27-33	21-24
Driveshaft and Coupling Shaft-to-Front and Rear Axle U-Bolt Nuts	5/16-18	11-20	8-15

a Dana axle.

Official Licensed Product
Ford Motor Company

TORQUE SPECIFICATIONS — DANA AXLE

Description	Axle Model					
	50		60		80	
	N·m	Lb-Ft	N·m	Lb-Ft	N·m	Lb-Ft
Pinion Shaft Nut	244-271	180-200	339-366	250-270	596-677	440-500
Differential Bearing Cap Bolts	109-122	80-90	109-122	80-90	109-122	80-90
Ring Gear Retaining Bolts, Grade 8	—	—	136-163	100-120	—	—
Ring Gear Retaining Bolts, Grade 9	129-142	95-105	169-183	125-135	272-325	200-240
Oil Filler Plug — 1/4-Inch Recess Drive	20-33	15-24	20-33	15-24	20-33	15-24
U-Joint Bolts	11-20	8-15	21-27	15-20	—	—
Cover to Housing Bolts	41-54	30-40	41-54	30-40	41-54	30-40

TORQUE SPECIFICATIONS — FORD RING GEAR AND PINION BOLTS

Description	N·m	Lb-Ft
10.25-Inch	136-163	100-120

SPECIAL SERVICE TOOLS/EQUIPMENT

SPECIAL SERVICE TOOLS REQUIRED

Tool Number/ Description	Illustration
T57T-4851-B Companion Flange Holding Tool	T57T-4851-B
T68P-4602-A Pinion Angle Level Gauge	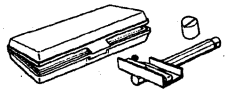 T68P-4602-A
T75L-4201-A Clutch Housing Alignment Adapter	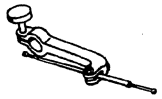 T75L-4201-A
T79P-4020-A Pinion Depth Gauge Set	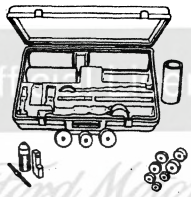 T79P-4020-A
T92T-4851-D Companion Flange Runout Gauge	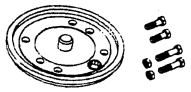 T92T-4851-D

(Continued)

SPECIAL SERVICE TOOLS REQUIRED (Cont'd)

Tool Number/ Description	Illustration
T92T-4851-E Gauge Pin	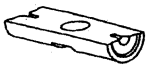 T92T-4851-E
T92T-4851-F Gauge Pin	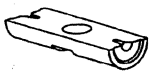 T92T-4851-F
T92T-4851-G Gauge Pin	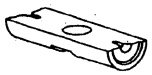 T92T-4851-G

SPECIAL SERVICE TOOLS DESIRED

Tool Number	Description
D78P-4201-B	Dial Indicator/Magnetic Base
TOOL-4201-C	Dial Indicator with Bracketry

ROTUNDA EQUIPMENT

Model	Description
006-01400	Electronic Strobe Balancer
014-00942	Hi-Lift Transmission Jack

Off-Line Licensed Product
Ford Motor Company

SECTION 05-01 Driveshaft

SUBJECT	PAGE
VEHICLE APPLICATION	05-01-1
DESCRIPTION AND OPERATION	
Driveshaft	05-01-1
Driveshaft with Double Cardan U-Joint	05-01-5
Driveshaft with Single Cardan U-Joint	05-01-3
Driveshaft, Front Axle	05-01-6
Universal Joints	05-01-7
DIAGNOSIS AND TESTING	
Driveshaft	05-01-8
REMOVAL AND INSTALLATION	
Driveshaft, Front, F-250 Heavy Duty	05-01-8
Driveshaft, Front, with Double Cardan U-Joint, F-350 4x4	05-01-8
Driveshaft, Rear, One-Piece	05-01-9
Driveshaft, Two- or Three-Piece, F-Super Duty Motorhome Chassis Vehicles	05-01-10
REMOVAL AND INSTALLATION (Cont'd.)	
Driveshaft/Coupling Shaft, Two-Piece (Except F-Super Duty Motorhome Chassis)	05-01-9
DISASSEMBLY AND ASSEMBLY	
Center Bearing	05-01-19
Driveshaft, Double Cardan Universal Joint	05-01-15
Driveshaft, Single Cardan Universal Joint	05-01-13
Slip Between Center Driveshaft	05-01-17
ADJUSTMENTS	
Driveline Support Plate, Adjustable, F-Super Duty Motorhome Chassis	05-01-19
Driveshaft Alignment	05-01-19
SPECIFICATIONS	05-01-21
SPECIAL SERVICE TOOLS/EQUIPMENT	05-01-21

VEHICLE APPLICATION

F-250 Heavy Duty and F-350 4x2 and 4x4; F-Super Duty Chassis Cab and Motorhome Chassis

Official Licensed Product
Ford Motor Company

DESCRIPTION AND OPERATION

Driveshaft

The driveshaft (4602) is a tubular shaft used to transfer torque from the engine, through the transmission to the ring gear and pinion in the rear axle (4001), which transmits the torque to the wheels. Driveshafts differ in length, diameter and type of slip and axle attachment, to accommodate various wheelbase and powertrain combinations.

Two-Piece Driveline System

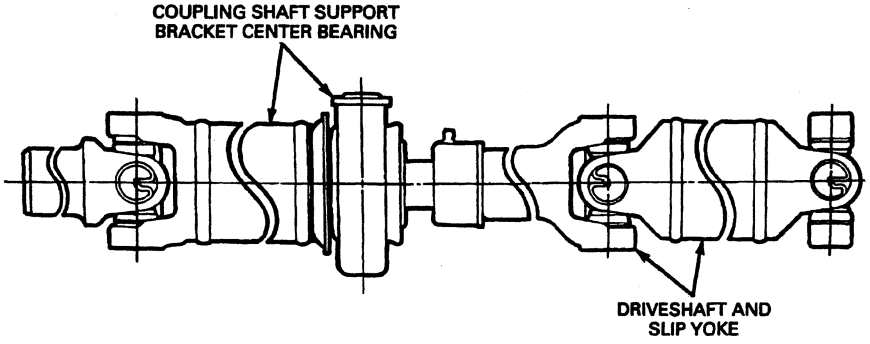

E9231-A

DESCRIPTION AND OPERATION (Continued)

Coupling Shaft/Center Bearing

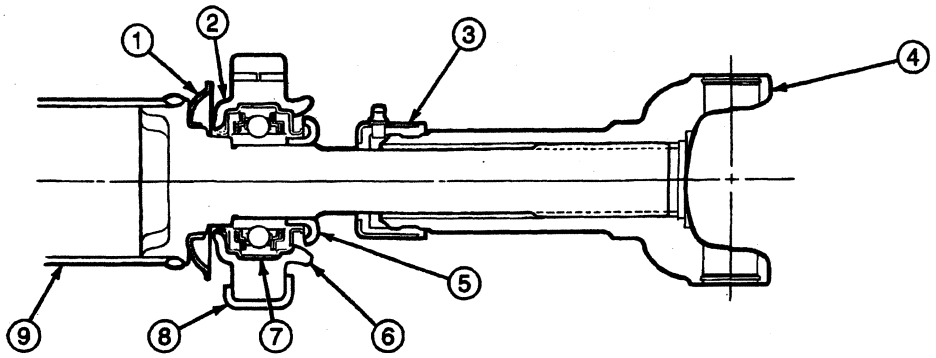

E9232-A

Item	Part Number	Description
1	—	Dust Slinger (Part of 4800)
2	—	Lip (Part of 4800)
3	—	Grease Seal (Part of 4841)
4	4841	Driveshaft Slip Yoke
5	—	Bearing Retainer Ring (Part of 4800)

(Continued)

Item	Part Number	Description
6	—	Rubber Insulator (Part of 4800)
7	—	Center Bearing (Part of 4800)
8	4A499	Driveshaft Center Bearing Bracket
9	—	Coupling Shaft (Part of 4R602)

Licensed Product
Ford Motor Company

Coupling Shaft

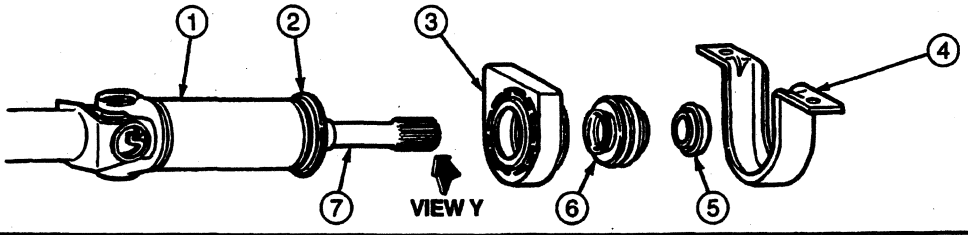

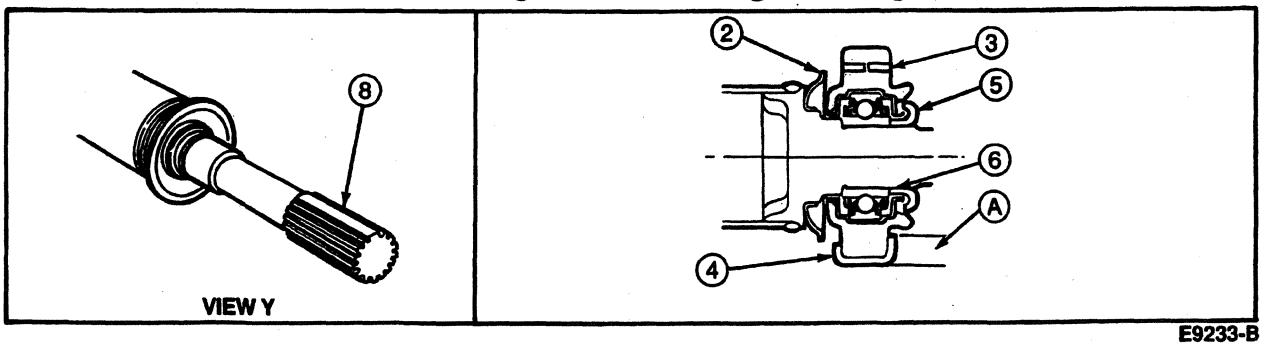

E9233-B

Item	Part Number	Description
1	4R602	Driveshaft and Coupling Shaft
2	—	Dust Slinger (Part of 4800)

(Continued)

Item	Part Number	Description
3	—	Rubber Insulator (Part of 4800)

(Continued)

DESCRIPTION AND OPERATION (Continued)

Item	Part Number	Description
4	4A499	Driveshaft Center Bearing Bracket
5	—	Bearing Retainer Ring (Part of 4800)
6	—	Center Bearing (Part of 4800)

(Continued)

Item	Part Number	Description
7	—	Splined Stub Shaft End (Part of 4817)
8	—	Blind Spline (Part of 4817)
A	—	12 70 mm (0 5 Inch) Installed with Deep Flange Toward Stub Shaft End (Rear)

Driveshaft

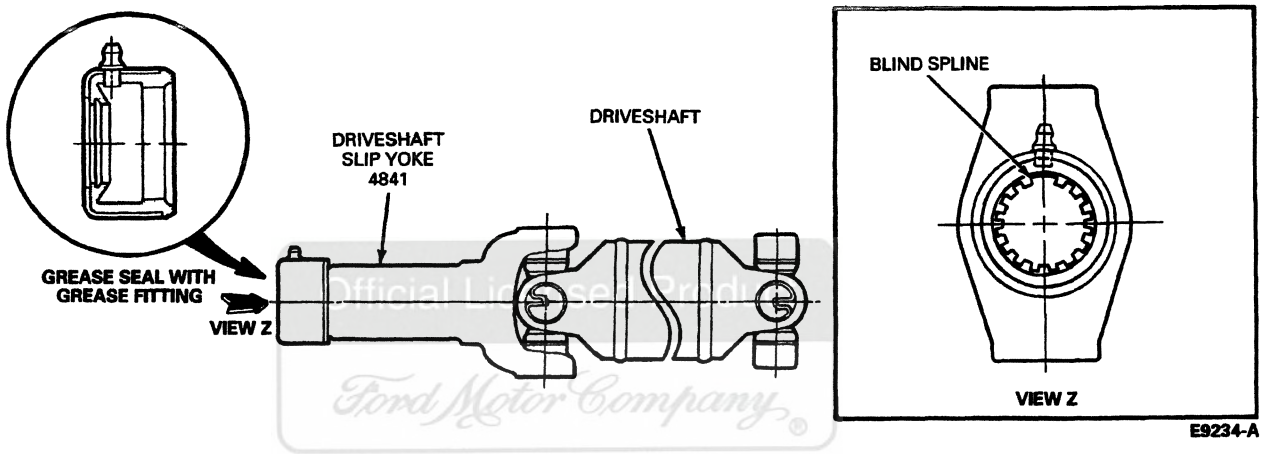

Driveshaft with Single Cardan U-Joint

The driveshaft or coupling shaft is composed of universal joints (U-joints), connecting shafts, attaching flanges, and driveshaft slip yokes (4841) The number of shafts and U-joints used depends on vehicle application

Some vehicles use a one-piece slip yoke driveshaft A universal joint and driveshaft slip yoke are located at the transmission end of the shaft, where they are held in alignment by a bushing in the extension housing (7A039) The driveshaft slip yoke and transmission output shaft permit fore and aft movement of the driveshaft as the rear axle moves up and down This provides smooth performance during vehicle operation An extension housing seal at the extension housing prevents leakage and protects the driveshaft slip yoke from dust, dirt and other harmful material A second universal joint mates with the rear axle companion flange at the rear axle

Others use a coupling shaft in conjunction with a driveshaft Care must be taken to align the shafts as shown in the illustrations The two-piece driveline system incorporates a "necked down" coupling shaft stub with a blind spline feature that ensures positive phasing action The blind spline feature is not used on the F-Super Duty Motorhome Chassis

DESCRIPTION AND OPERATION (Continued)

One-Piece Driveshaft Slip Yoke

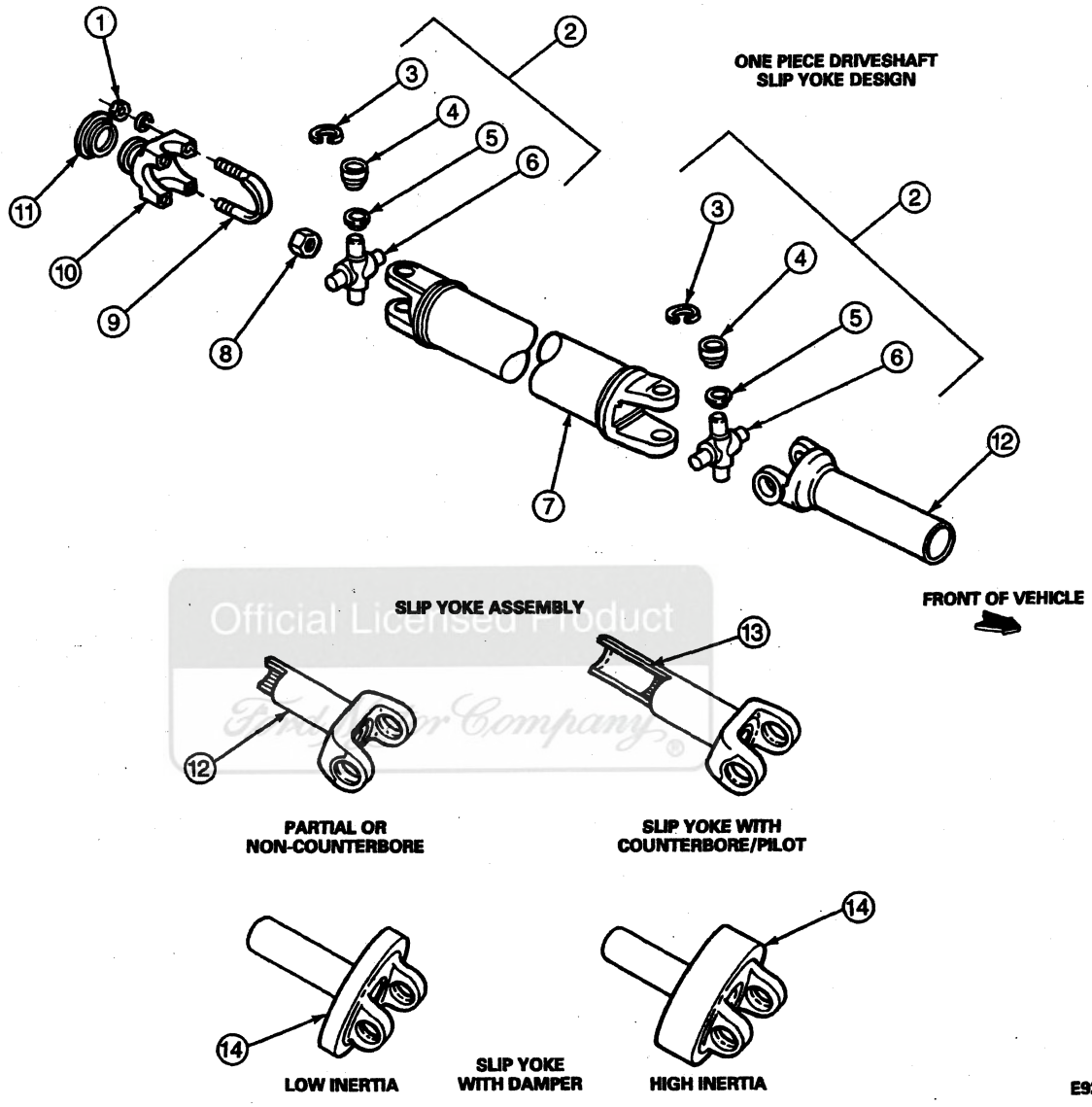

Official Licensed Product
Ford Motor Company®

Item	Part Number	Description
1	—	Nut
2	4635	Universal Joint
3	—	Snap Ring (Part of 4635)
4	—	Bearing Cup (Part of 4635)
5	—	Seal (Part of 4635)
6	—	Spider (Part of 4635)
7	4602	Driveshaft
8	—	Nut

Item	Part Number	Description
9	—	U-Bolt
10	4851	Rear Axle Companion (Universal Joint) Flange (Half-Round)
11	4859	Dust Seal
12	4841	Driveshaft Slip Yoke
13	—	Counter Bore / Pilot (Part of 4841)
14	—	Damper (Part of 4841)

(Continued)

DESCRIPTION AND OPERATION (Continued)

Universal Joint

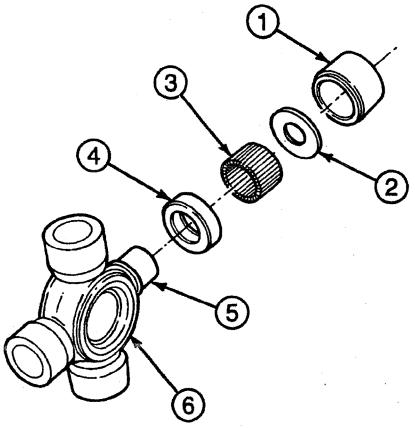

E8739-B

Item	Part Number	Description
1	—	Bearing Cup (Part of 4635)
2	—	Thrust Washer (Part of 4635)
3	—	Needle Rollers (Part of 4635)
4	—	Grease Seal (Part of 4635)
5	—	Trunnion (Part of 4635)
6	—	Spider (Part of 4635)

Driveshaft with Double Cardan U-Joint

NOTE: Double Cardan driveshaft center yoke (4784) requires lubrication.

NOTE: All driveshafts are balanced. Therefore, if the vehicle is to be undercoated, cover the driveshaft to prevent undercoating material from getting on the shaft.

The driveshaft applicable to F-350 4x4 front driveshaft vehicles is of the double Cardan-type that incorporates two U-joints, a driveshaft centering socket yoke (4782), and a driveshaft center yoke at the transfer case end of each shaft. A single U-joint is used at the axle end of the shafts. All U-joints are lubricated for life and do not require scheduled maintenance.

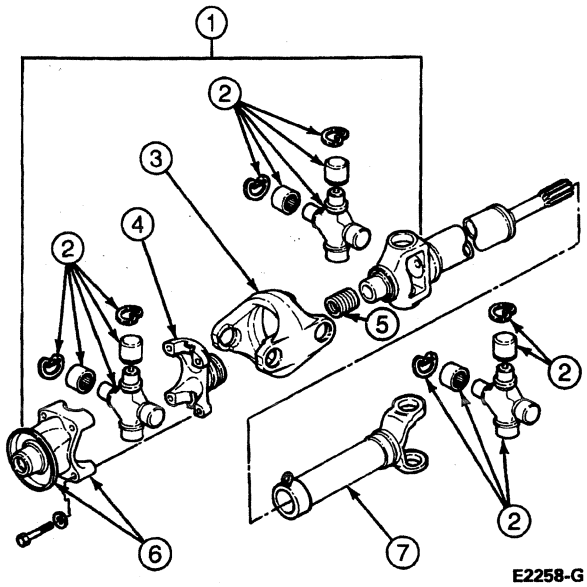

E2258-G

Item	Part Number	Description
1	4635	Double Cardan Assy
2	4635	Universal-Joint
3	4784	Driveshaft Center Yoke
4	4782	Driveshaft Centering Socket Yoke
5	—	Centering Spring (Part of 4782)
6	7B214	Transfer Case Yoke (Flange)
7	4841	Driveshaft Slip Yoke

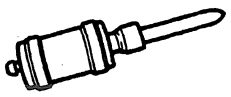

LUBRICANT ADAPTER
ALEMITE NO. 6783

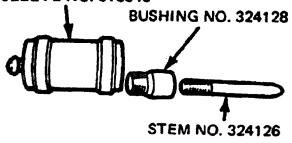

ADAPTER DETAILS

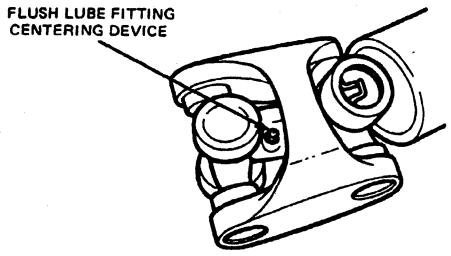

DOUBLE CARDAN JOINT

E2707-1F

DESCRIPTION AND OPERATION (Continued)

Driveshaft, Front Axle

NOTE: Whenever the vehicle is raised on a hoist, inspect the slip yoke boot for rips or holes. Replace if required.

NOTE: All front driveshafts are balanced. If the vehicle is to be undercoated, cover the driveshaft and U-joints to prevent application of any undercoating material.

The front axle driveshaft used on F-250 Heavy Duty and F-350 4x4 vehicles connects the power flow from the transfer case to the front drive axle. It incorporates two single Cardan universal joints (U-joints one double Cardan on F-350 4x4), a driveshaft with a splined stub shaft end and a slip yoke boot with two slip yoke boot clamps, one large and one small.

Front Driveshaft, F-250 Heavy Duty 4x4

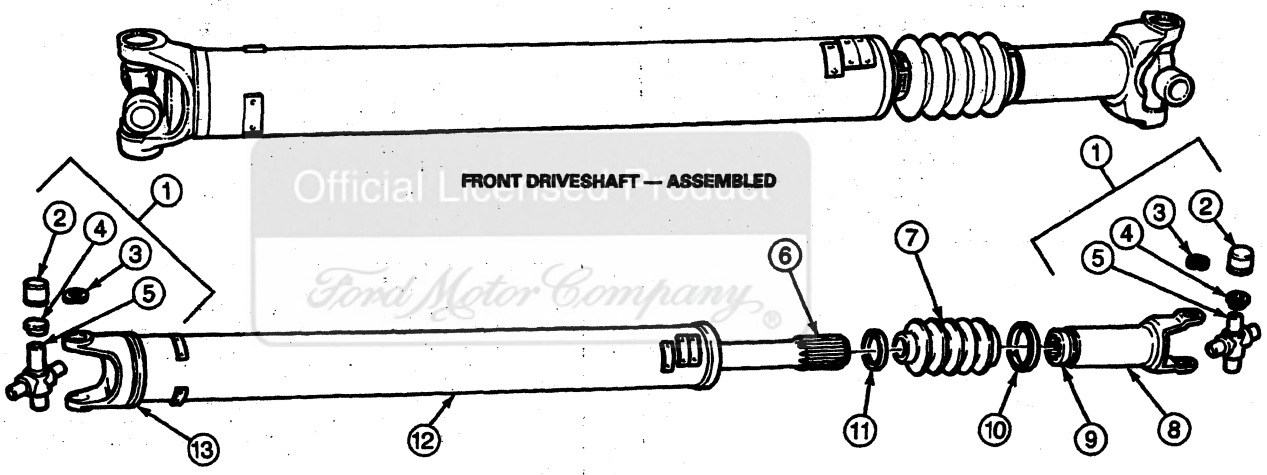

FRONT DRIVESHAFT — ASSEMBLED

FRONT DRIVESHAFT — EXPLODED VIEW

E5581-C

Official Licensed Product
Ford Motor Company

Item	Part Number	Description
1	4635	Universal Joint
2	—	Bearing (Part of 4635)
3	—	Snap Ring (Part of 4635)
4	—	Seal (Part of 4635)
5	—	Spider (Part of 4635)
6	—	Splined Stub Shaft (Part of 4602)

(Continued)

Item	Part Number	Description
7	4421	Slip Yoke Boot
8	4841	Driveshaft Slip Yoke
9	—	Boot Groove (Part of 4841)
10	4K227	Large Clamp
11	4K227	Small Clamp
12	4602	Driveshaft
13	—	Front Driveshaft Yoke (Part of 4602)

DESCRIPTION AND OPERATION (Continued)

Front Driveshaft, F-350 4x4

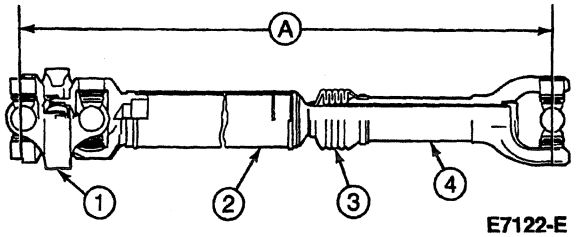

E7122-E

Item	Part Number	Description
1	—	Front Double Cardan (to Transmission)
2	4602	Driveshaft
3	4421	Universal Joint Slip Yoke Boot
4	4841	Driveshaft Slip Yoke
A	—	E4OD — 970 mm (38.19 Inches). S5-47 (ZF) 7.5L and 7.3L — 832 mm (32.75 Inches). S5-47 (ZF) 5.8L — 905.8 mm (35.66 Inches).

NOTE: Driveshafts and coupling shafts are balanced; therefore, if the vehicle is being undercoated, the shafts and all open spline areas must be covered to prevent undercoating material from getting on the shafts.

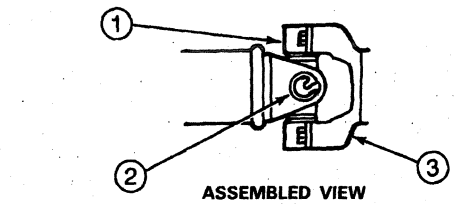

ASSEMBLED VIEW

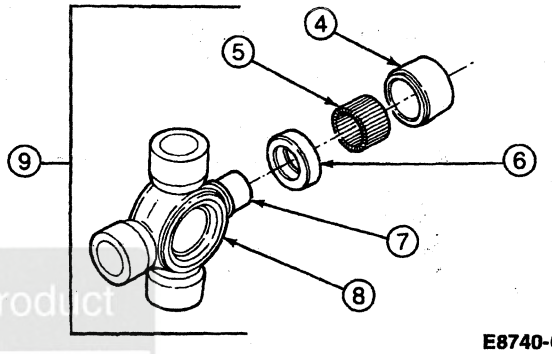

E8740-C

Item	Part Number	Description
1	4A524	Bearing Strap Type
2	—	Snap Ring Type (Part of 4635)
3	4851	Companion (Universal Joint) Flange
4	—	Bearing Cup (Part of 4635)
5	—	Needle Rollers (Part of 4635)
6	—	Grease Seal (Part of 4635)
7	—	Trunnion (Part of 4635)
8	—	Spider (Part of 4635)
9	4635	Universal Joint Assy (Items 4, 5, 6, 7, 8)

Universal Joints

The universal joints (U-joints) are lubricated for life except on Motorhome Chassis vehicles. Two types of universal joint kits are used: Dana design and Ford design. The designs are similar. The universal joints are equipped with a nylon thrust washer at the base of the bearing cup. This thrust washer controls end play, positions the needle bearings and improves grease movement. Parts are not interchangeable between Dana and Ford design universal joint kits.

Licensed Product
Ford Motor Company

DESCRIPTION AND OPERATION (Continued)

CAUTION: Universal joint components from different manufacturers or new and used universal joint kits should never be mixed. Universal joints are to be installed as complete assemblies only.

All two- and three-piece driveshaft vehicles are equipped with driveshaft center bearing supports (4800) that are prelubricated and sealed for life.

U-joints and driveshaft slip yokes (4841) equipped with grease fittings should be lubricated at the scheduled intervals. U-joint bearings are retained on the U-joints spiders by snap rings and U-bolts or straps on some applications.

The universal joint is attached to the rear axle companion flange by means of U-bolts or bolts with straps.

DIAGNOSIS AND TESTING

Driveshaft

Refer to Section 05-00.

REMOVAL AND INSTALLATION

Driveshaft, Front, F-250 Heavy Duty

Removal

1. To maintain driveshaft coupling shaft balance, mark the driveshaft slip yoke (4841) in relation to the transfer case yoke for correct positioning during installation.
2. Remove the nuts and U-bolts that connect the rear driveshaft slip yoke to the transfer case and the front yoke to the front drive axle.
3. Remove the driveshaft from the vehicle. Wrap tape around the bearing caps to prevent the bearings from falling off the U-joint spiders.

Installation

1. NOTE: If the driveshaft slip yoke and slip yoke boot have been separated from the splined stub shaft on the driveshaft, refer to Slip Between Center Driveshaft in the Disassembly and Assembly portion of this section.

   Install the driveshaft so the marks on the driveshaft slip yoke and transfer case yoke are in alignment.
2. Install the nuts and U-bolts that retain the driveshaft slip yoke to the transfer case yoke. Tighten nuts to 11-20 N·m (8-15 lb-ft).
3. Install the nuts and U-bolts that retain the front driveshaft and coupling shaft yoke to the front drive axle. Tighten nuts to 11-20 N·m (8-15 lb-ft).

Driveshaft, Front, with Double Cardan U-Joint, F-350 4x4

Removal

Index mark the driveshaft (4602) in relation to the transfer case and front axle universal joint flange. Disconnect the double Cardan joint from the flange at the transfer case and the single U-joint from the flange at the front axle. Remove the driveshaft. Wrap tape around the bearing caps (front) to prevent the bearings from falling off the U-joint spiders.

Installation

1. Align index marks and position the single U-joint end of the driveshaft to the front axle and install the U-bolts and nuts.
2. Position the double Cardan joint to the transfer case with index marks aligned and install the four bolts and lockwashers.
3. Tighten the bolts at the transfer case to 27-38 N·m (20-28 lb-ft), and the U-bolts and nuts at the front axle to 11-20 N·m (8-15 lb-ft).

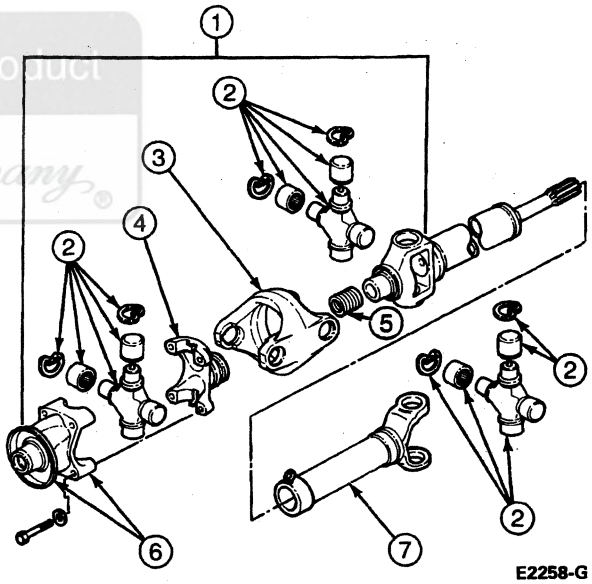

E2258-G

Item	Part Number	Description
1	4635	Double Cardan Assy
2	4635	U-Joint Assy
3	4784	Driveshaft Center Yoke
4	4782	Driveshaft Centering Socket Yoke
5	—	Centering Spring (Part of 4635)
6	7B214	Transfer Case Yoke (Flange)
7	4841	Driveshaft Slip Yoke

Official Licensed Product Ford Motor Company

REMOVAL AND INSTALLATION (Continued)

Driveshaft, Rear, One-Piece

Removal

1. Raise vehicle and install safety stands.
2. NOTE: On four-wheel drive vehicles equipped with a slip between center driveshaft, disconnect the driveshaft (4602) at the transfer case during removal.

   To maintain driveline balance, if the yellow alignment marks are not visible, mark the relationship of the driveshaft flange yoke (4866) and the rear axle companion flange so they may be reinstalled in their original positions.
3. Remove the nuts retaining the driveshaft universal joint U-bolt to the rear axle companion flange or bolts and straps.
   a. Disconnect the U-joint from the rear axle companion flange, being careful not to drop the U-joint bearing cups.
   b. Wrap tape around the U-joint to retain the bearing cups.
   c. Slide the driveshaft rearward off the transmission output shaft.
   d. Install an appropriate plug in the extension housing (7A039) to prevent fluid loss.

Installation

1. If the lugs on the rear axle companion flange are shaved or distorted so the bearings slide, replace the rear axle companion flange.

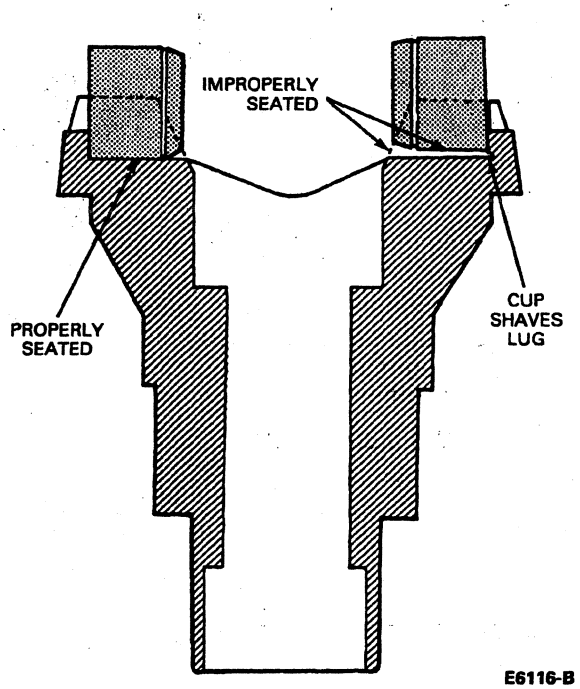

2. Lubricate the slip yoke spline with Premium Long-Life Grease XG-1-C or -K or equivalent meeting Ford specification ESA-M1C75-B.
3. Remove the plug from the extension housing. Inspect extension housing seal for damage. Replace if necessary.
4. Install the driveshaft slip yoke (4841) on the transmission output shaft. Do not allow the driveshaft slip yoke to bottom on the output transmission shaft with excessive force.
5. NOTE: When installing a new driveshaft, align the factory-made yellow paint mark at the rear of the driveshaft tube with the factory-made yellow paint mark on the outside diameter of the rear axle companion flange. If paint marks are not visible and vibration exists after installation, refer to Section 05-00.

   Install the driveshaft so that the index marks made before removal are aligned or the yellow mark (if visible) on the driveshaft tube (light side) is in line with the yellow mark on the rear axle companion flange high side runout. This prevents vibration that occurs when the balance of the shaft and runout of the axle companion flange become additive instead of neutralizing. If a vibration exists, the driveshaft should be disconnected from the rear axle (4001), rotated 180 degrees and reinstalled.
6. Install the U-bolts and nuts that attach the U-joint to the rear axle companion flange. If equipped with straps and bolts, install and tighten bolts to specifications. Refer to Specifications at the end of this section.
7. Remove stands and lower vehicle.
8. Road test vehicle

Driveshaft/Coupling Shaft, Two-Piece (Except F-Super Duty Motorhome Chassis)

Removal

1. Raise the vehicle and install safety stands.
2. NOTE: To maintain driveline balance, mark the relationship of the rear driveshaft yoke and the rear axle companion flange before disassembly.

   Disconnect the driveshaft (4602) from the rear axle companion flange and disconnect the driveshaft slip yoke (4841) from the coupling shaft yoke. Wrap tape around the loose bearing caps to prevent the bearings from falling off the universal joint spiders.
3. Remove the two center bearing support (coupling shaft)-to-frame crossmember retaining bolts marking the location of the support. Remove the coupling shaft assembly. Wrap tape around the loose bearing caps. Install the appropriate tool in the extension housing (7A039) to prevent leaking.

REMOVAL AND INSTALLATION (Continued)

4. Clean the male splines of the coupling shaft and driveshaft with a wire brush and a suitable solvent. Remove all hardened grease deposits, dirt or rust. Do not remove the blue plastic coating from male splines. Inspect for worn or galled splines. Remove any nicks, gouges or burrs from the driveshaft using a file or emery cloth.
5. Inspect the driveshaft slip yoke seal for rips, holes or deformation. Replace if necessary.
6. Using a suitable cleaning fluid, clean all dirt from the driveshaft slip yoke internal splines and the driveshaft slip yoke. Carefully inspect the driveshaft slip yoke splines for wear or evidence of twisting. Check the operation of the driveshaft slip yoke.
7. Wash all parts except the sealed center bearing and rubber insulator in suitable cleaning fluid. Do not immerse the sealed bearing in cleaning fluid. Wipe the bearing and rubber insulator clean with a cloth dampened in cleaning fluid.
8. Check the driveshaft center bearing for wear or rough action by rotating the inner race while holding the outer race. If any wear or roughness is evident, replace the driveshaft center bearing support (4800).
9. Examine the rubber insulator for evidence of hardening, cracking or deterioration. Replace if damaged in any way.

Installation

1. Using a brush, coat all surfaces of the coupling shaft front slip yoke splines with Premium Long-Life Grease XG-1-C or -K or equivalent meeting Ford specification.
2. Remove the tool preventing leakage from the extension housing (driveshaft slip yoke applications only).
3. Install the front yoke of the coupling shaft on the output shaft. Do not allow the driveshaft slip yoke to bottom on the output shaft with excessive force.
4. Secure the center bearing support bracket to the frame crossmember with the center support retaining bolts and spacers in the original position. Tighten the bolts to 53-73 N·m (39-54 lb-ft).
5. Apply a coating of Premium Long-Life Grease XG-1-C or -K or equivalent meeting Ford specification ESA-M1C75-B to entire splined stub shaft end of the coupling shaft prior to the assembling of the driveshaft and the driveshaft slip yoke.
6. Using a clean long handle (stencil type) brush, apply Premium Long-Life Grease XG-1-C or -K or equivalent meeting Ford specification ESA-M1C75-B. Spread evenly on all the female splines of the driveshaft slip yoke.
7. Assemble the driveshaft slip yoke to the coupling shaft.
8. NOTE: When installing a new driveshaft, align the factory-made yellow paint mark at the rear of the driveshaft tube with the factory-made yellow paint mark on the outside diameter of the rear axle companion flange.

   Connect the rear U-joint of the driveshaft to the rear axle companion flange and tighten the U-bolt nuts or strap bolts to specification. Refer to Specifications at the end of this section.
9. NOTE: To ensure complete lubrication of the driveshaft slip yoke splines, temporarily plug the vent hole in the "welch" type plug located at the yoke end of the driveshaft slip yoke while applying grease through the zerk fitting.

   Using a hand type grease gun, lubricate the driveshaft slip yoke through the zerk fitting with Premium Long-Life Grease XG-1-C or -K or equivalent meeting Ford specification ESA-M1C75-B.
10. Remove safety stands and lower vehicle.
11. Road test vehicle.

Driveshaft, Two- or Three-Piece, F-Super Duty Motorhome Chassis Vehicles

Removal

1. Disconnect the driveshaft (4602) from the flange at the rear axle (4001).
2. Slide the driveshaft off the coupling shaft splines.
3. Working from the driveshaft center bearing support (4800) nearest to the rear of the vehicle, remove the two center bearing bracket-to-support plate bolts and support the driveshaft center bearing bracket (4A499).
4. Remove the forward joint from its mating yoke and remove driveshaft. As the driveshafts are removed, wrap tape around the loose bearing cups.
5. Repeat two previous steps until last shaft has been removed.
6. Thoroughly clean old grease and dirt from the driveshaft splines, and then check the splines for wear, warpage and cracks. If the shaft is worn, warped or cracked, replace it.
7. Using a suitable cleaning fluid, clean all dirt from the driveshaft slip yoke (4841), driveshaft slip yoke splines and shaft splines.

   Do not clean the plastic coating on the male splines with a wire brush. Do not remove the plastic coating from the male splines.
8. Carefully inspect the driveshaft slip yoke splines for wear or evidence of twisting. Check the clearance between the driveshaft slip yoke splines and the shaft splines.

Official Licensed Product
Ford Motor Company

REMOVAL AND INSTALLATION (Continued)

9. Wash all parts except the driveshaft center bearing support in suitable cleaning fluid. Do not immerse the sealed bearing in cleaning fluid. Wipe the bearing and rubber insulator clean with a cloth dampened with cleaning fluid.
10. Check the bearing for wear or rough action by rotating the outer race. If wear or roughness is evident, replace the bearing.
11. Inspect the rubber insulator for evidence of hardening, cracking or deterioration. Replace it if it is damaged in any way.
12. Grease retainers and slingers are serviced only as part of the driveshaft center bearing support.

Installation

1. Connect the front joint of the coupling shaft to the yoke on the transmission. Tighten the bolts to 34-54 N·m (25-40 lb-ft).
2. Support the driveshaft and install the center bearing bracket to support plate bolts and nuts. Tighten the bolts to 53-73 N·m (39-54 lb-ft). Make sure the center bearing is not twisted in the support plate.
3. If working on a vehicle with more than one coupling shaft, connect the rear shaft to the forward one, then install the remaining driveshaft center bearing support. Lubricate all splines with High Temperature Grease E43Z-19590-A or equivalent meeting Ford specification ESP-M1C207-A.
4. Connect the rear U-joints to the rear axle flange and tighten the bolts to 34-54 N·m (25-40 lb-ft). Make sure all driveshaft and coupling shaft yokes are properly in phase. Refer to the following illustration.

Driveshaft, Two-Piece, 178- and 190-Inch Wheelbase

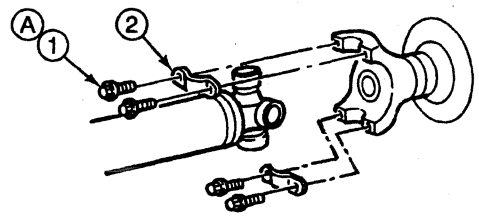

VIEW OF AXLE AND TRANSMISSION ATTACHMENT

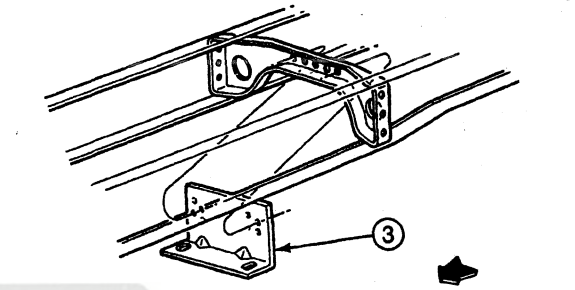

FRONT OF VEHICLE

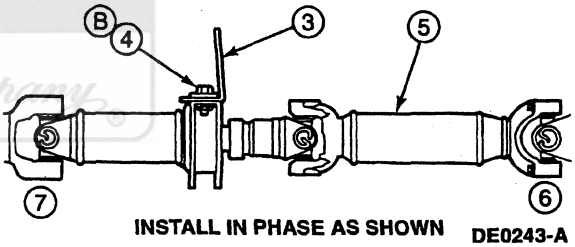

INSTALL IN PHASE AS SHOWN DE0243-A

Item	Part Number	Description
1	390880-S100	Bolt
2	4A254	Driveshaft Universal Joint Spider Retainer
3	4831	Support Plate
4	56761-S2	Bolt
5	4602	Driveshaft
6	—	Axle End (Part of 4602)
7	—	Transmission End (Part of 4602)
A	—	Tighten to 34-54 N·m (25-40 Lb-Ft)
B	—	Tighten to 53-73 N·m (39-54 Lb-Ft)

Licensed Product Ford Motor Company

REMOVAL AND INSTALLATION (Continued)

Driveshaft, Three-Piece, 208- and 228-Inch Wheelbase

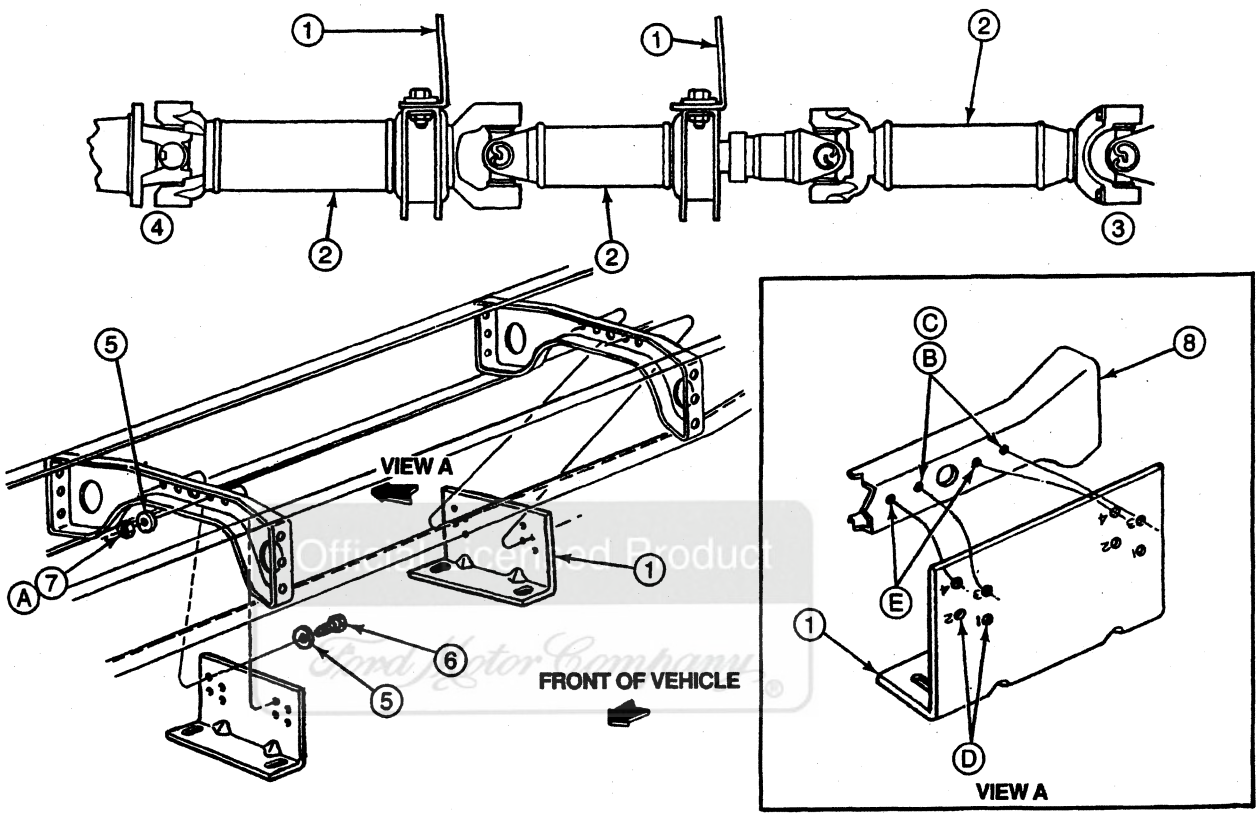

DE0242-A

Item	Part Number	Description
1	4831	Support Plate
2	4602	Driveshaft
3	—	Axle End (Part of 4602)
4	—	Transmission End (Part of 4602)
5	N630088	Washer
6	N605921	Bolt
7	—	Nut

(Continued)

Item	Part Number	Description
8	5019	Frame Crossmember
A	—	Tighten to 53-73 N·m (39-54 Lb-Ft)
B	—	See Support Plate Position Chart for Holes to Mount to Crossmember
C	—	Align with Holes 2 and 4
D	—	Numbers Are Stamped into Part
E	—	Align with Holes 1 and 3

SUPPORT PLATE POSITION CHART

Support	Wheelbase	Use Mount Holes
Forward	208-Inch	No. 3
Forward	228-Inch	No. 1
Rearward	208-Inch	No. 4
Rearward	228-Inch	No. 5

DISASSEMBLY AND ASSEMBLY

Driveshaft, Single Cardan Universal Joint

SPECIAL SERVICE TOOL(S) REQUIRED

Description	Tool Number
U-Joint Tool	T74P-4635-C

Disassembly

1. **CAUTION: Under no circumstances is the driveshaft to be clamped in the jaws of a vise or similar holding fixture. Denting or localized fracture of the tube can result, which can cause driveshaft and coupling shaft failure during vehicle operation.**

   Place the driveshaft on a suitable workbench, being careful not to damage the tube.

2. NOTE: If components are not marked and therefore installed incorrectly, driveline imbalance may occur.

   Prior to disassembly, mark the positions of the driveshaft components relative to the driveshaft tube. All components must be reassembled in the same relationship to maintain proper balance.

3. Clamp U-Joint Tool T74P-4635-C in vise.

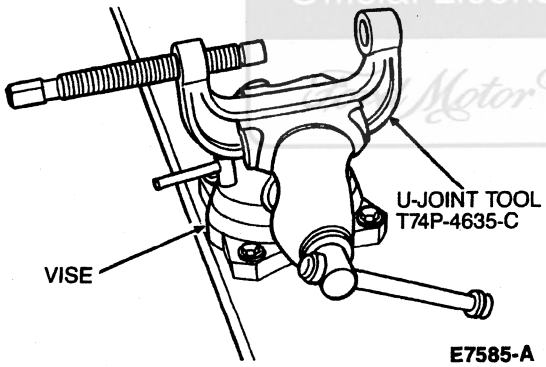

E7585-A

4. Remove the snap rings that retain the bearing cups.

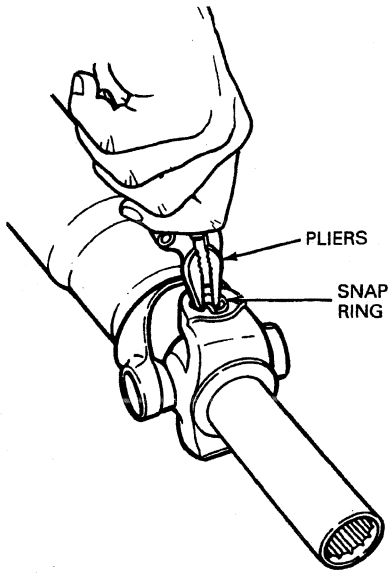

E9091-A

5. Position the driveshaft slip yoke (4841) in the U-Joint Tool and press out bearing. If bearing cup cannot be pressed all the way out of the driveshaft slip yoke, remove it with vise grip or channel lock pliers.

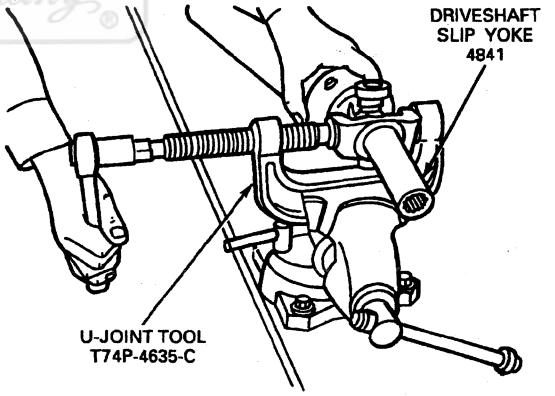

E9239-A

Official Licensed Product Ford Motor Company

DISASSEMBLY AND ASSEMBLY (Continued)

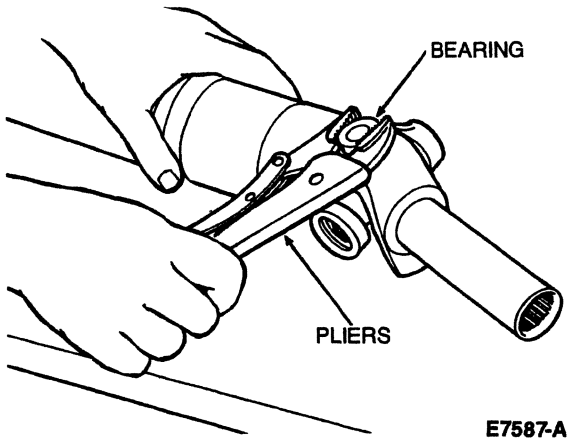

E7587-A

6 Reposition the driveshaft slip yoke in U-Joint Tool 180 degrees from previous position Press on the spider and remove the remaining bearing cup from the opposite side

7 Remove driveshaft slip yoke from the spider

8 Remove the remaining bearing cups, spiders and driveshaft flange yoke (4866) from the driveshaft (4602) in the same manner

9 Clean all foreign matter from the yoke area at each end of the driveshaft

Assembly

1 NOTE Universal joint kits are to be installed as complete assemblies only Do not mix components from other universal joints

Start a new bearing cup into the driveshaft yoke

2 Position the new spider in the driveshaft yoke and press the bearing cup 6 3 mm (1 / 4 inch) below the yoke surface using U-Joint Tool T74P-4635-C

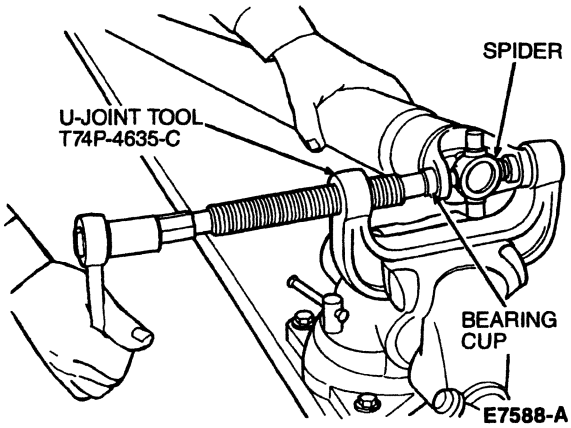

E7588-A

3 Remove driveshaft from U-joint tool and install a new snap ring

4 Start a new bearing cup into the opposite side of the yoke Check needles for proper position

5 Position driveshaft in U-joint tool and press on the bearing cup until the opposite bearing cup contacts the snap ring

6 NOTE Assemble universal joint using the yellow snap rings supplied in the kit If difficulty is encountered with yellow snap rings, install the black snap rings supplied in the kit

Remove the driveshaft from tool and install a new snap ring Check snap ring for proper seating

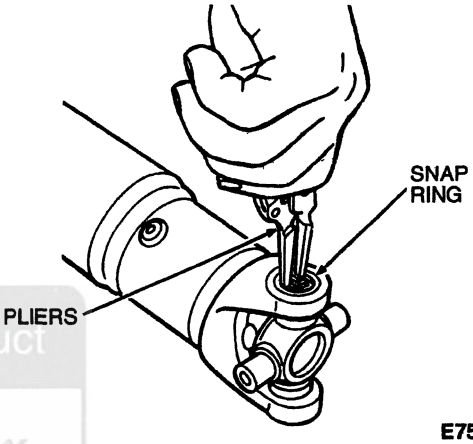

E7589-A

7 Install the remaining new bearing cups, spider, driveshaft slip yoke, driveshaft flange yoke and snap rings in the same manner

8 Check U-joints for freedom of movement The effort required for movement should not exceed 4 N·m (35 lb-in) when measured with a spring scale If binding has resulted from misalignment during assembly, a sharp rap on the yokes with a brass or plastic hammer will seat bearing needles Take care to support the shaft end and do not strike the bearings during this procedure Make sure U-joints rotate easily without binding before installing driveshaft

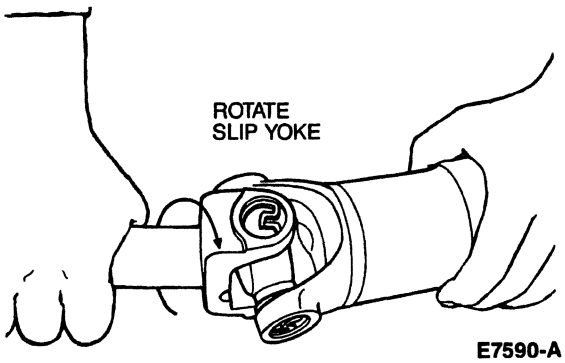

E7590-A

Official Licensed Product
Ford Motor Company

DISASSEMBLY AND ASSEMBLY (Continued)

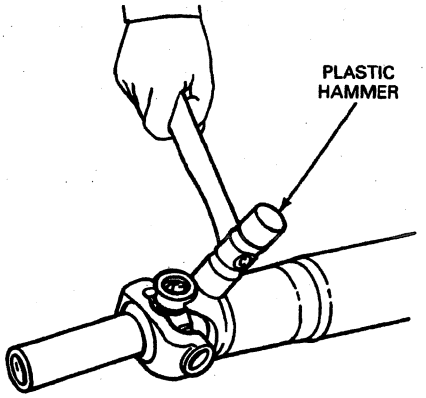

E9104-B

9. Lubricate the universal joints (if equipped with grease fittings) with Premium Long-Life Grease XG-1-C or -K or equivalent meeting Ford specification ESA-M1C75-B.

Driveshaft, Double Cardan Universal Joint

SPECIAL SERVICE TOOL(S) REQUIRED

Description	Tool Number
U-Joint Tool	T74P-4635C

Disassembly

1. **CAUTION: Under no circumstances is the driveshaft to be clamped in the jaws of a vise or similar holding fixture. Denting or localized fracture of the tube can result, which can cause driveshaft failure during vehicle operation.**

   Place the driveshaft (4602) on a suitable workbench being careful not to damage the tube.
2. Mark the positions of the spiders, the driveshaft center yoke (4784), and the driveshaft centering socket yoke (4782) as related to the stud yoke that is welded to the front of the driveshaft.
3. Remove the snap rings that secure the bearings in the front of the driveshaft center yoke.
4. Position U-Joint Tool T74P-4635-C as shown. Tighten the tool clockwise until the bearing protrudes approximately 9.525 mm (3/8 inch) out of the yoke.

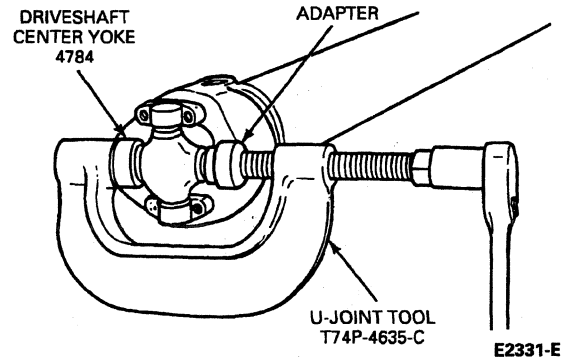

E2331-E

5. Clamp the bearing in a vise and tap on the driveshaft center yoke to free it from the bearing.

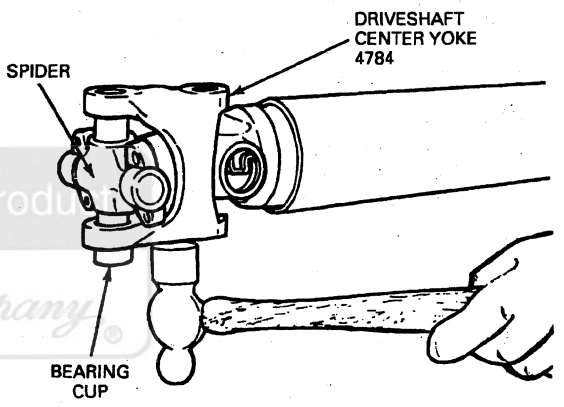

E2332-D

6. Lift the two bearing cups from the spider.

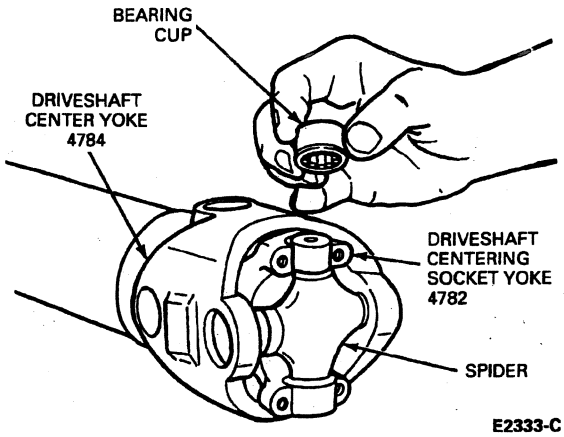

E2333-C

7. Reposition the tool on the driveshaft center yoke and move the remaining bearing in the opposite direction so that it protrudes approximately 9.525 mm (3/8 inch) out of the driveshaft center yoke.
8. Clamp the bearing in a vise. Tap on the driveshaft center yoke to free it from the bearing.

Official Licensed Product

DISASSEMBLY AND ASSEMBLY (Continued)

9. Remove the spider from the driveshaft center yoke.
10. Pull the driveshaft centering socket yoke off the center stud. Remove the rubber seal from the centering ball stud.

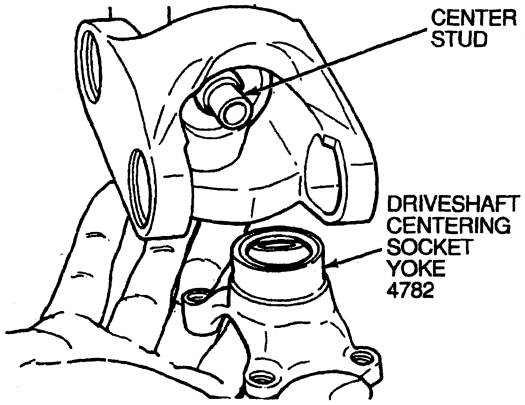

E2334-E

11. Remove the snap rings from the driveshaft center yoke and from the driveshaft yoke.
12. Position the U-joint tool on the driveshaft yoke and press the bearing outward until the inside of the driveshaft center yoke almost contacts the oil slinger at the front of the driveshaft yoke.

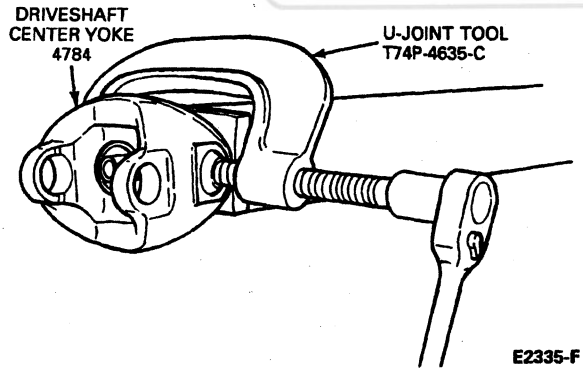

E2335-F

Pressing beyond this point can distort the oil slinger. The following illustration shows the interference point.

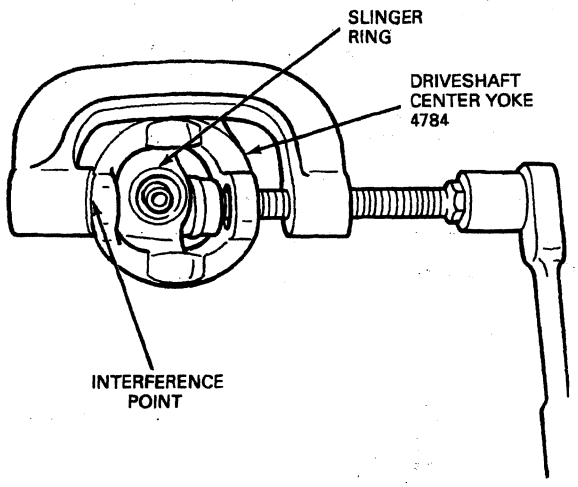

E2336-D

13. Clamp the exposed end of the bearing in a vise and drive on the driveshaft center yoke with a soft-faced hammer to free it from the bearing.
14. Reposition the tool and press on the spider to remove the opposite bearing.
15. Remove the driveshaft center yoke from the spider.
16. Remove the spider from the driveshaft yoke in the same manner.
17. Clean all serviceable parts in cleaning solvent. If using a repair kit, install all of the parts supplied in the kit. If the driveshaft is damaged, replace the complete shaft to make sure assembly is balanced.

Assembly

1. NOTE: Universal joint kits are to be installed as complete assemblies only. Do not mix any components from other universal joint kits.

   Position the spider in the driveshaft yoke. Make sure the spider bosses (or lubrication plugs on kits) will be in the same position as originally installed.
2. Press in the bearing using U-Joint Tool T74P-4635-C. Install the snap rings.
3. Pack the socket relief and the ball with Premium Long-Life Grease XG-1-C or -K or equivalent meeting Ford specification ESA-M1C75-B.
4. Position the driveshaft center yoke over the spider ends and press in the bearing. Install the snap rings.
5. Install a new seal on the centering ball stud. Position the driveshaft centering socket yoke on the stud.
6. Place the front spider in the driveshaft center yoke. Make sure the spider bosses are properly positioned.

Original Licensed Product

DISASSEMBLY AND ASSEMBLY (Continued)

7. With the spider loosely positioned on driveshaft center yoke, proceed to seat the first pair of bearings into the driveshaft centering socket yoke, then press the second pair into the driveshaft center yoke. Install the snap rings.
8. Apply pressure on the driveshaft centering socket yoke and install the remaining bearing cup.
9. Lubricate the universal joint (if equipped with grease fittings) with Premium Long-Life Grease XG-1-C or -K or equivalent meeting Ford specification ESA-M1C75-B.

Slip Between Center Driveshaft

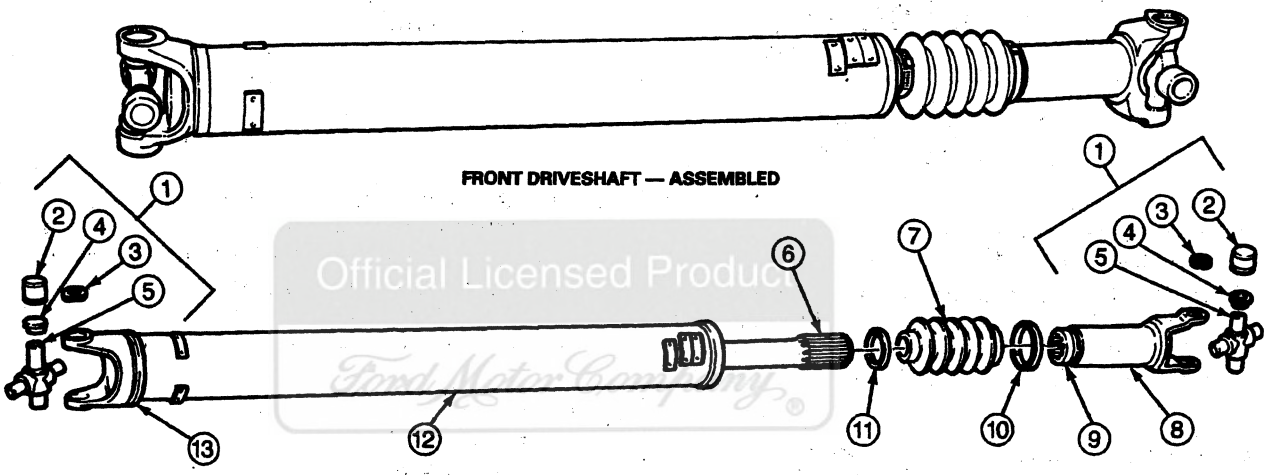

FRONT DRIVESHAFT — ASSEMBLED

FRONT DRIVESHAFT — EXPLODED VIEW

E5581-C

Official Licensed Product
Ford Motor Company

Item	Part Number	Description
1	4635	Universal Joint Kit
2	—	Bearing (Part of 4635)
3	—	Snap Ring (Part of 4635)
4	—	Seal (Part of 4635)
5	—	Spider (Part of 4635)
6	—	Splined Stub Shaft (Part of 4602)

(Continued)

Item	Part Number	Description
7	4421	Slip Yoke Boot
8	4841	Driveshaft Slip Yoke
9	—	Boot Groove (Part of 4841)
10	4K227	Large Clamp
11	4K227	Small Clamp
12	4602	Driveshaft
13	—	Front Driveshaft Yoke (Part of 4602)

SPECIAL SERVICE TOOL(S) REQUIRED

Description	Tool Number
Keystone Clamp Pliers	T63P-9171-A

DISASSEMBLY AND ASSEMBLY (Continued)

Disassembly

1. With the front driveshaft on a bench, cut the driveshaft slip yoke boot clamps (4K227) with sidecutters. Remove and discard the clamps.

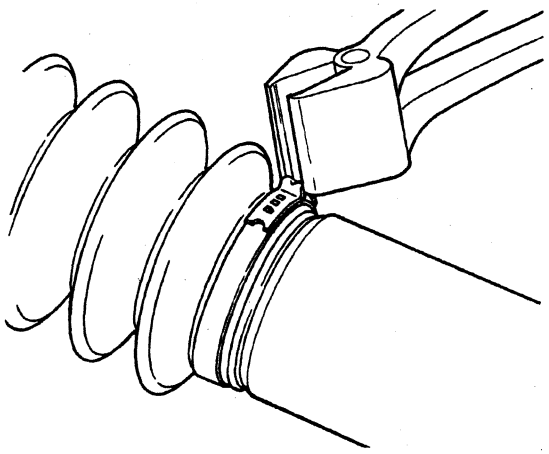

E5582-1A

2. Separate the driveshaft slip yoke (4841) from the splined stub shaft on the driveshaft.
3. Remove the slip yoke boot. Inspect the slip yoke boot for rips or holes and replace if required.
4. If, during inspection, the driveshaft and coupling shaft boot is found to be cracked or split, check the grease for contamination. Check the lubricant by rubbing between two fingers. Any gritty feeling indicates a contaminated driveshaft slip yoke and stub shaft. If driveshaft (4602) is operating satisfactorily and the grease does not appear to be contaminated, add grease as described in the assembly portion of this procedure and replace the slip yoke boot. If the grease appears contaminated, disassemble the driveshaft, and clean and inspect the stub shaft and driveshaft slip yoke for wear. If splines are excessively worn, replace driveshaft.
5. If required, remove and replace the U-joints.

Assembly

1. Install the slip yoke boot with the small diameter side facing the splined stub shaft on the stub shaft. Push the slip yoke boot as far as it will travel on the stub shaft.

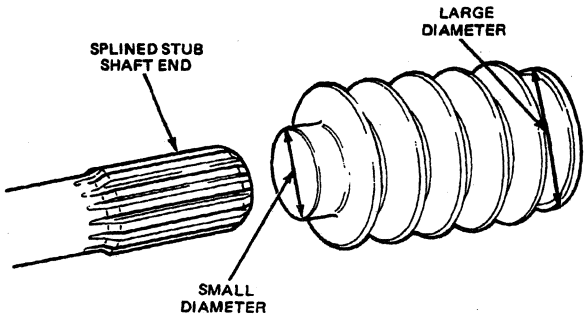

E5584-1A

2. Install a small driveshaft slip yoke boot clamp and crimp the clamp using Keystone Clamp Pliers T63P-9171-A.

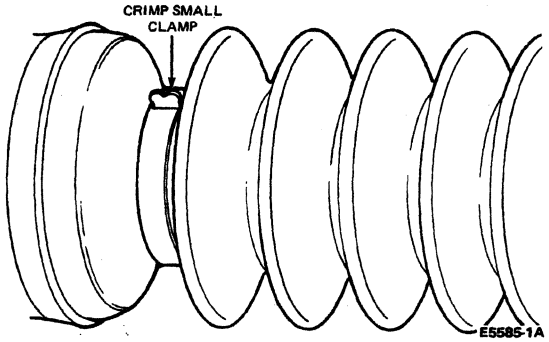

E5585-1A

3. Compress the slip yoke boot and coat the stub shaft splines with Premium Long-Life Grease XG-1-C or -K or equivalent meeting Ford specification ESA-M1C75-B.
4. Fill the slip yoke boot with approximately 10 grams of Premium Long-Life Grease XG-1-C or -K or equivalent meeting Ford specification ESA-M1C75-B.
5. Slide the large driveshaft slip yoke boot clamp onto the barrel of the driveshaft slip yoke.
6. Align the blind splines on the splined stub shaft and in the driveshaft slip yoke. Push the driveshaft slip yoke onto the stub shaft.

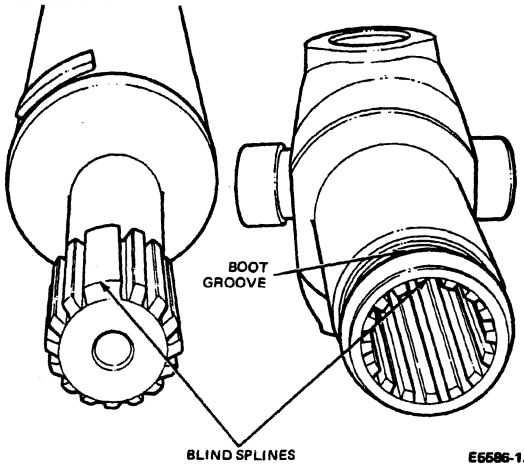

E5586-1A

7. Remove all excess grease from the slip yoke boot and driveshaft slip yoke surfaces. Position the slip yoke boot over the driveshaft slip yoke boot groove.

Official Licensed Product

DISASSEMBLY AND ASSEMBLY (Continued)

8. Move the driveshaft slip yoke in or out in order to obtain the distance of 10 inches between stud shaft weld to the centerline of the driveshaft slip yoke U-joint.

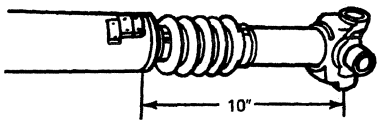

E8744-A

9. Before installing the new large slip yoke boot clamp, make sure that any air pressure which may have built up in the slip yoke boot is relieved. Carefully insert a screwdriver between the slip yoke boot and the driveshaft slip yoke and allow the trapped air to escape ("burp") from the slip yoke boot. The air must be released only after the driveshaft is set at the specified length.

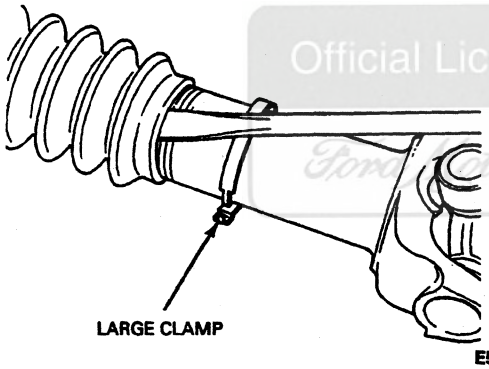

E5587-B

10. Position the new large driveshaft slip yoke boot clamp over the slip yoke boot and groove in the driveshaft slip yoke. Crimp the driveshaft slip yoke boot clamp with Keystone Clamp Pliers T63P-9171-A.

Center Bearing

Disassembly

1. **CAUTION: Under no circumstances is the driveshaft to be clamped in the jaws of a vise or similar holding fixture. Denting or localized fracture of the tube can result, which can cause driveshaft failure.**

   Place the coupling shaft / center bearing on a suitable workbench, being careful not to damage the tube.
2. Separate slip yoke from coupling shaft (if attached).
3. Remove driveshaft center bearing bracket (4A499) and retainer.
4. Remove the rubber insulator.
5. Press (using a suitable press) driveshaft center bearing support (4800) and bearing retainer off the coupling shaft.
6. Press the dust slinger off the coupling shaft.

Assembly

1. Replace with Center Bearing Assembly Kit D9TZ-4800-A (Motorhome only) or Kit E4TZ-4800-A (F-250 Heavy Duty, F-350 and F-Super Duty Chassis Cab with S5-47 ZF transmission).
2. Install dust slinger. Install driveshaft center bearing bracket in the rubber insulator and press the bearing on the shaft with the turned-in lip toward the dust slinger (forward). The support bracket must be installed with the deep flange rearward.
3. Install slip yoke to coupling shaft. Tighten nut. Refer to Specifications.

ADJUSTMENTS

Driveshaft Alignment

For adjustment procedures including driveshaft and coupling shaft runout and balance, refer to Component Tests or the Adjustments portion of Section 05-00.

Before adjusting components for correct driveshaft and coupling shaft alignment, be sure to check the following.

1. Alignment of drivelines must be accomplished with the empty vehicle sitting on a hard level surface.
2. All angle measurements must be made on a surface or the component which is either parallel to or perpendicular to the centerline of the component being measured.
3. Angle measurements must be made with either a spirit level or an inclinometer. Angle values given in Section 05-00 are nominal values with a tolerance of ± 0.25 degree.

Driveline Support Plate, Adjustable, F-Super Duty Motorhome Chassis

An adjustable driveline support plate is used. Although it can be mounted in any one of several positions, only one position is correct for a specific application. The correct position can be determined from the following chart and illustration.

SUPPORT PLATE POSITION CHART

Support	Wheelbase	Use Mount Holes
Forward	208-Inch	No. 3
Forward	228-Inch	No. 1
Rearward	208-Inch	No. 4

(Continued)

ADJUSTMENTS (Continued)

SUPPORT PLATE POSITION CHART (Cont'd)

Support	Wheelbase	Use Mount Holes
Rearward	228-Inch	No 5
Single	178 Inch	No 2
Single	190 Inch	No 2

Adjustable Driveline Support Plate Position

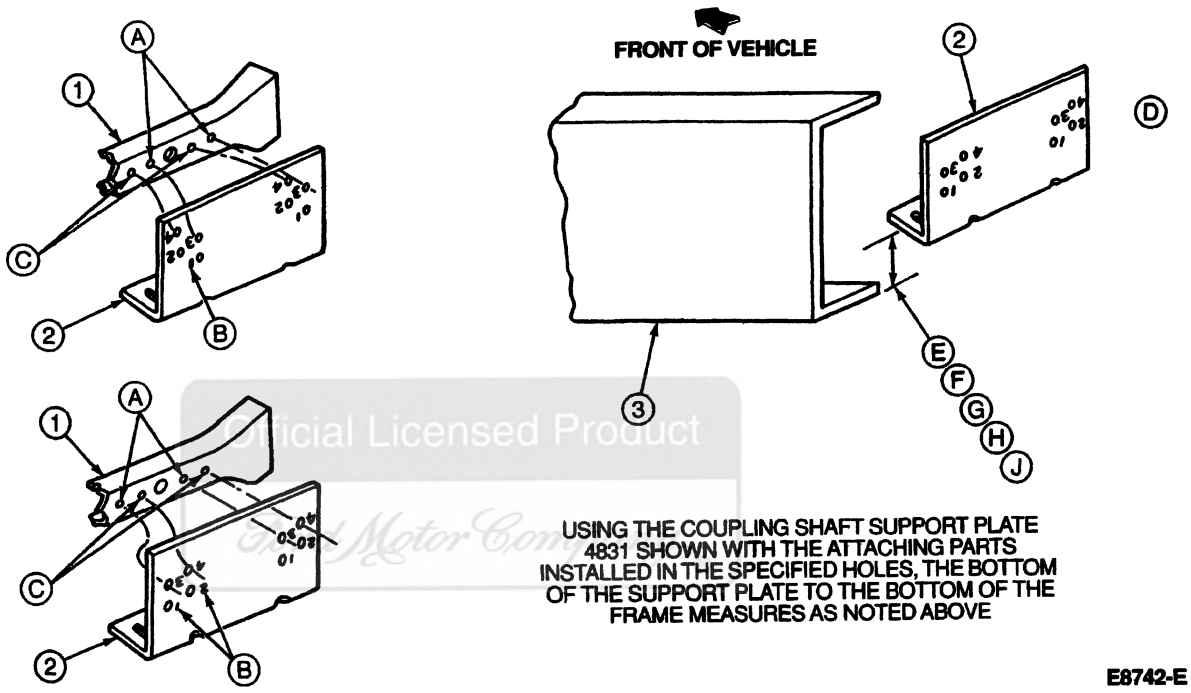

E8742-E

Item	Part Number	Description
1	—	Frame Crossmember (Part of 5005)
2	4831	Support Plate
3	—	Frame Side Rail (Part of 5005)
A	—	Align with Holes 2 and 4
B	—	Numbers Are Stamped into Part
C	—	Align with Holes 1 and 3
D	—	Legs of Support Plate Must Always Face Front of Vehicle As Shown
E	—	74 4 mm (2 93 Inch) 208-Inch Wheelbase Forward Support

(Continued)

Item	Part Number	Description
F	—	10 4 mm (0 41 Inch) 208-Inch Wheelbase Rearward Support
G	—	35 6 mm (1 40 Inch) 178- and 190-Inch Wheelbase Single Support
H	—	48 5 mm (1 91 Inch) 228-Inch Wheelbase Forward Support
J	—	2 5 mm (0 10 Inch) 228-Inch Wheelbase Rearward Support (Support Plate Mounting Surface Below Bottom of Frame)

SPECIFICATIONS

LUBRICANT/ADHESIVE/CLEANER SPECIFICATIONS

Description	Part Number	Ford Specification
Premium Long-Life Grease	XG-1-C or -K	ESA-M1C75-B
High Temperature Grease	E43Z-19590-A	ESP-M1C207-A

TORQUE SPECIFICATIONS

Description	N·m	Lb-Ft
Bolt Yoke to Coupling Shaft 5/8-18 (Dana)	201-222	148-164
Bolt Yoke to Coupling Shaft 3/4-16	238-325	175-240
Bolt Yoke to Coupling Shaft 7/8-14	339-406	250-300
Bolt Yoke to Coupling Shaft 1-20	216	160
Nut-U-Joints — Driveshaft Universal Joint Bolt 5/16-18	11-20	8-15
Nut-U-Joints — Driveshaft Universal Joint Bolt 3/8-18	24-35	18-26
Nut-U-Joints — Driveshaft Universal Joint Bolt 7/16-20	41-54	30-40
Coupling Shaft Center Bearing Bracket-to-Support 7/16-20 — Motorhome Chassis	68-95	50-70
Bolt — Driveshaft U-Joint to Rear Yoke 1/2-20	123-149	91-110
Transfer Case-to-Rear Axle Bolt	83-118	61-87
Driveshaft-to-Front and Rear Axle U-Bolt Nuts 5/16-18	11-20	8-15
Center Support Bracket-to-Crossmember 7/16-14 x 1.25 Except Motorhome Chassis	53-73	39-54

(Continued)

TORQUE SPECIFICATIONS (Cont'd)

Description	N·m	Lb-Ft
Double Cardan (F-350 4x4) Front Driveshaft-to-Transfer Case Bolts 5/16-24 x 1.25	27-38	20-28
Front Driveshaft-to-Transfer Case (F-250 Heavy Duty) U-Bolt Nuts	11-20	8-15
Rear Driveshaft-to-Transmission or Rear Axle Strap and Bolt (F-250 HD or F-350 with 7.5L or 7.3L Diesel) 5/16-24 x .75	34-54	25-40

SPECIAL SERVICE TOOLS/EQUIPMENT

SPECIAL SERVICE TOOLS REQUIRED

Tool Number/ Description	Illustration
T63P-9171-A Keystone Clamp Pliers	T63P-9171-A
T74P-4635-C U-Joint Tool	T74P-4635-C

Official Licensed Publication Company

SECTION 05-02A Wheel Hubs and Bearings, Rear, Ford Full-Floating Axle

SUBJECT	PAGE
VEHICLE APPLICATION	05-02A-1
DESCRIPTION AND OPERATION	
Brakes, Anti-Lock, Rear	05-02A-4
Hub Assembly, Full-Floating	05-02A-1
DIAGNOSIS AND TESTING	
Wheel Hubs and Bearings	05-02A-4
REMOVAL AND INSTALLATION	
Axle Shaft, Hub, Oil Seal and Outer Wheel Bearing	05-02A-4
DISASSEMBLY AND ASSEMBLY	
Hub, Full-Floating Axle	05-02A-10
SPECIFICATIONS	05-02A-15
SPECIAL SERVICE TOOLS/EQUIPMENT	05-02A-16

VEHICLE APPLICATION

F-250 Heavy Duty and F-350

DESCRIPTION AND OPERATION

Official Licensed Product Ford Motor Company

Hub Assembly, Full-Floating

The full-floating rear axle features brake drums that are mounted outboard of the rear hub (1109). When brake inspection or replacement is required the rear hub need not be removed.

The rear hub is supported or floats on the axle spindle on two opposed tapered roller bearings. It is retained on the spindle by a ratcheting nut that is tabbed to a slot on the spindle.

DESCRIPTION AND OPERATION (Continued)

Integral Carrier, Rear Axle Assembly, Disassembled View, Full-Floating, Typical

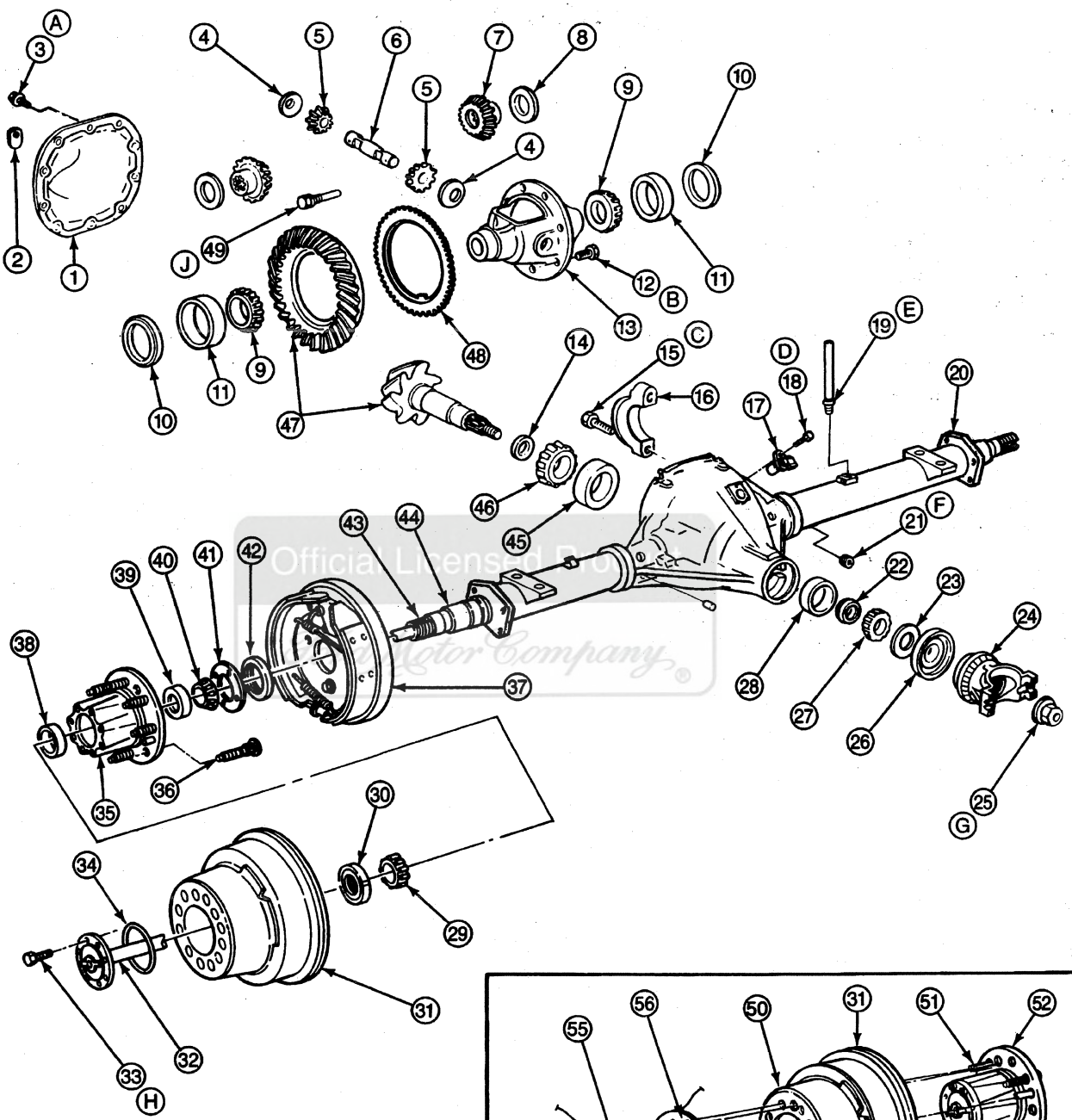

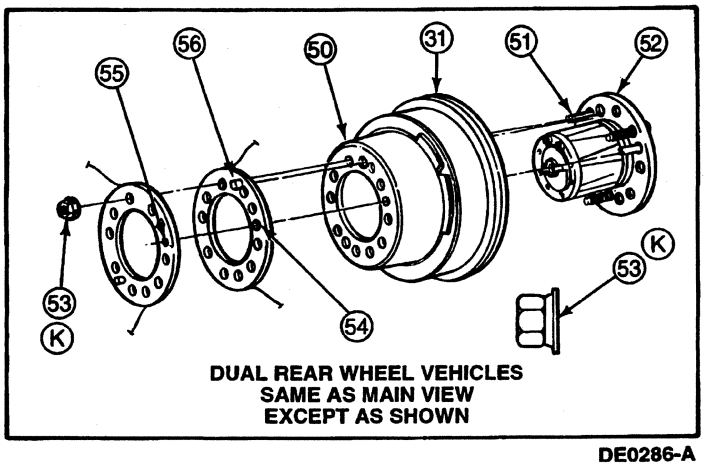

DUAL REAR WHEEL VEHICLES SAME AS MAIN VIEW EXCEPT AS SHOWN

DE0286-A

DESCRIPTION AND OPERATION (Continued)

Item	Part Number	Description
1	4033	Axle Housing Cover
2	—	Ratio Tag (Not Serviced)
3	390864-S2	Screw
4	4230	Differential Pinion Thrust Washer
5	4215	Differential Pinion Gear
6	4211	Differential Pinion Shaft
7	4236	Differential Side Gear
8	4228	Differential Side Gear Thrust Washer
9	4221	Differential Bearing
10	4067	Differential Bearing Shim
11	4222	Differential Bearing Cup
12	43114-S100	Ring Gear Bolt
13	4204	Differential Case
14	4663	Drive Pinion Bearing Adjustment Shim
15	46157-S100	Bearing Cap Bolt
16	—	Differential Bearing Cap (Part of 4010)
17	2C190	Rear Brake Anti-Lock Sensor
18	390356	Bolt, Rear Brake Anti-Lock Sensor
19	4022	Rear Axle Housing Vent
20	4010	Rear Axle Housing
21	390943-S100	Filler Plug
22	4662	Differential Drive Pinion Collapsible Spacer
23	4670	Rear Axle Drive Pinion Shaft Oil Slinger
24	4851	Rear Axle Universal Joint Flange
25	389546-S100	Pinion Nut
26	4676	Rear Axle Drive Pinion Seal
27	4621	Differential Pinion Bearing (Outer)
28	4616	Differential Drive Pinion Bearing Cup (Outer)
29	1240	Outer Bearing
30	1A124	Hub Nut (RH)
30	1A125	Hub Nut (LH)
31	1126	Brake Drum
32	4234	Axle Shaft
33	46053-S100	Bolt, Axle Shaft
34	390258-S	O-Ring, Axle Shaft
35	1109	Rear Hub
36	390268-S	Press Fit Stud
37	2211	Brake Backing Plate
38	1239	Outer Bearing Cup

(Continued)

Item	Part Number	Description
39	1202	Bearing Cup
40	1244	Rear Wheel Bearing Inner Cone and Roller
41	1250	Rear Wheel Bearing Oil Slinger
42	1177	Inner Wheel Bearing Oil Seal
43	—	Keyway (Part of 4010 Housing)
44	—	Spindle (Part of 4010 Housing)
45	4628	Rear Axle Pinion Bearing Cup (Inner)
46	4630	Differential Pinion Bearing (Inner)
47	4209	Differential Ring Gear and Pinion
48	4B409	Anti-Lock Speed Sensor Ring
49	4241	Differential Pinion Shaft Lock Pin
50	—	Four Clearance Holes in Drum for Wheel Pin and Hub (Part of 1126)
51	1107	Lug Bolts
52	—	Two Wheel Pin Locating Holes (Part of 1116)
53	1012	Lug Nut
54	—	Locating Hole in Wheel (Part of 1001)
55	—	Locating Hole in Wheel (Part of 1001)
56	305136-S7	Locating Pin in Wheel (Part of 1001)
A	—	Tighten to 38-52 N·m (28-38 Lb-Ft). For Ratio Tag Hold-Down Bolt, Tighten to 24-38 N·m (18-28 Lb-Ft).
B	—	Apply Threadlock® and Sealer EOAZ-19554-AA or Equivalent Meeting Ford Specification WSK-M2G315-A5 (Type II). Tighten to 136-163 N·m (100-120 Lb-Ft).
C	—	Tighten to 109-129 N·m (80-95 Lb-Ft)
D	—	Tighten to 34-40 N·m (25-30 Lb-Ft)
E	—	Tighten to 20 N·m (15 Lb-Ft)
F	—	Tighten to 20-40 N·m (15-30 Lb-Ft)
G	—	Pinion Bearing Preload For Used Bearings 0.9-1.5 N·m (8-14 Lb-In); For New Bearings 1.8-3.3 N·m (16-29 Lb-In).

(Continued)

Ford Licensed Product Ford Motor Company

DESCRIPTION AND OPERATION (Continued)

Item	Part Number	Description
H	—	Tighten to 95-115 N·m (75-85 Lb-Ft)
J	—	Apply Threadlock® and Sealer EOAZ-19554-AA or Equivalent Meeting Ford Specification WSK-M2G315-A5. Tighten to 20-40 N·m (15-30 Lb-Ft).
K	—	Tighten to 170-230 N·m (126-170 Lb-Ft)

(Continued)

Brakes, Anti-Lock, Rear

F-250 Heavy Duty and F-350 vehicles use the rear anti-lock brake system. The system is designed to automatically reduce brake pressure when brake lockup is detected during braking. The system features an anti-lock speed sensor ring that is pressed on the differential case (4204) behind the ring gear. If the anti-lock speed sensor ring is removed, it must be discarded and replaced with a new one. The anti-lock speed sensor ring works in conjunction with the rear brake anti-lock sensor retained in a bore at the top of the carrier and fastened by one bolt. There is a space provided between the ring gear and anti-lock speed sensor ring for measuring the ring gear backface runout. For more information on the rear anti-lock brake system, refer to Section 06-09 in the Body, Chassis Manual.

DIAGNOSIS AND TESTING

Wheel Hubs and Bearings

Refer to Section 05-00.

REMOVAL AND INSTALLATION

Axle Shaft, Hub, Oil Seal and Outer Wheel Bearing

SPECIAL SERVICE TOOL(S) REQUIRED

Description	Tool Number
Locknut Wrench	T85T-4252-AH

Removal

NOTE: If, for any reason, the rear hub (1109) is removed from the spindle, the old hub seal must be removed and a new hub seal installed.

1. Set the parking brake and loosen the eight axle shaft retaining bolts.
2. Raise the vehicle to the desired working height, keeping the axle parallel with the floor.
3. Release parking brake and back off the rear brake adjustment, if necessary.
4. Remove the wheel (1007).
5. Remove brake drum (1126). Push-on (sheet metal) drum retainer nuts may be discarded. Push-on retainer nuts are used for shipping purposes only and have no vehicle function. If retainers are not flush against the drum, the retainers can prevent the wheel from being flat against the drum, which could contribute to vibration.

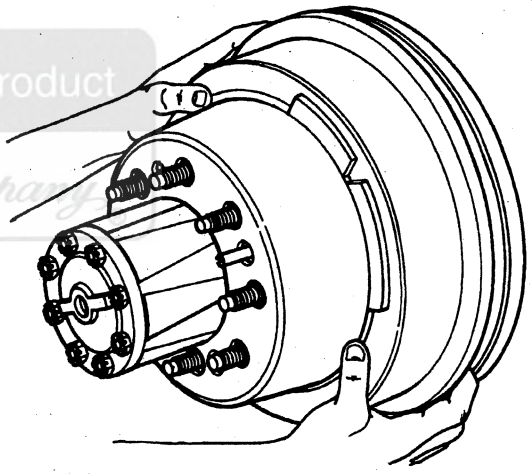

E6474-1A

6. Place a drain pan under the axle shaft (4234) and rear hub. Remove the eight 7 / 16-inch axle shaft bolts and remove the axle shaft.

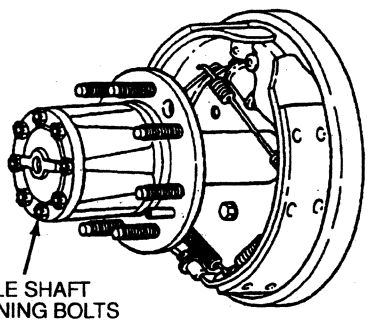

E9788-A

Licensed Product
Ford Motor Company

REMOVAL AND INSTALLATION (Continued)

Axle Shaft Removal

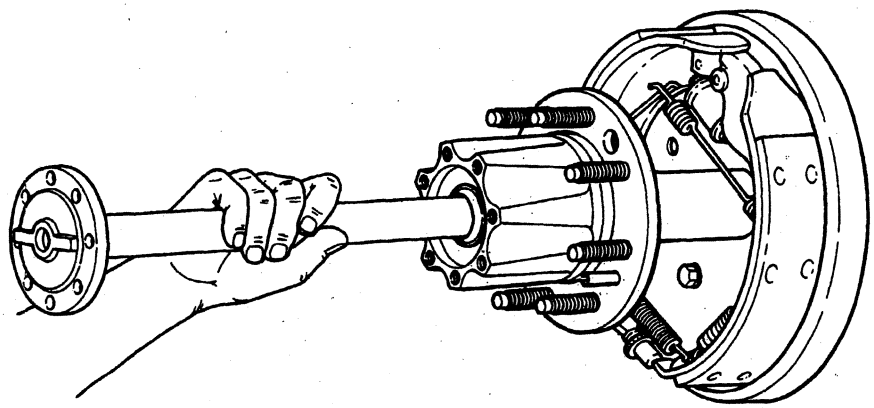

E6475-2A

7. **CAUTION: The right hub nuts are right-hand thread; the left hub nuts are left-hand thread. Each hub nut is stamped RH for the right hub nut or LH for the left hub nut.**

   Install Locknut Wrench T85T-4252-AH so that the drive tangs of the tool engage the four slots in the hub nut.

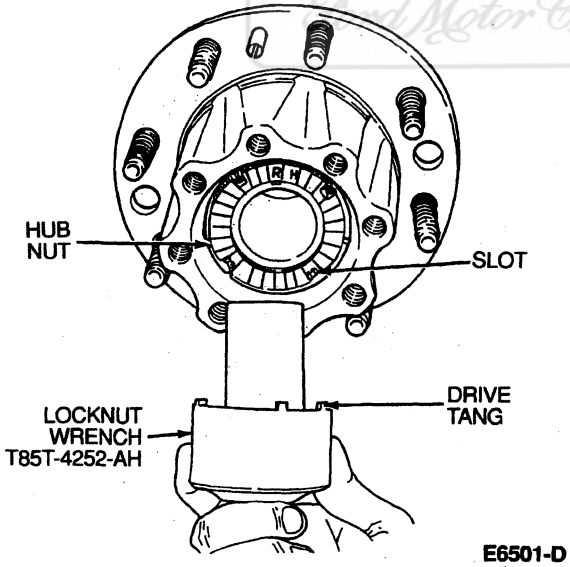

E6501-D

8. **CAUTION: A new hub nut must be installed if used hub nut comes apart during removal or installation.**

   CAUTION: Under no circumstances are power impact tools to be used when performing these operations.

   NOTE: The hub nut will ratchet during this operation.

   Remove hub nut (counterclockwise for right-hand thread; clockwise for left-hand thread).

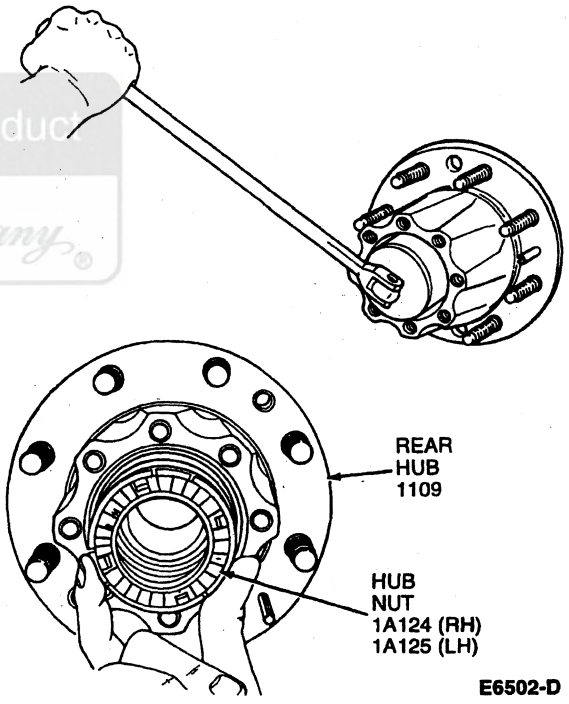

E6502-D

REMOVAL AND INSTALLATION (Continued)

9. Install Step Plate Adapter D80L-630-7 (Part of Step Plate Adapter Set D80L-630-A) or equivalent.

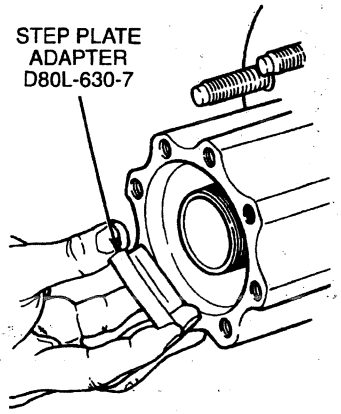

E6503-C

10. Install 2-Jaw Puller D80L-1002-L or equivalent and loosen rear hub to the point of removal.

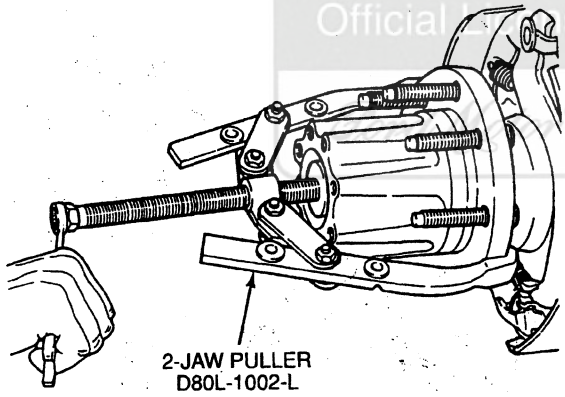

E6504-C

11. **CAUTION: Do not drop outer hub bearing when removing.**

    Remove rear hub assembly.

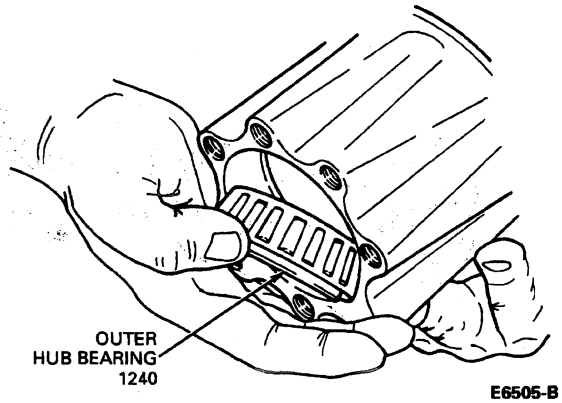

E6505-B

12. Replace hub oil seal. Refer to Rear Hub, Full-Floating Axle in the Disassembly and Assembly portion of this section.

13. **CAUTION: Extreme care should be taken not to scratch or gouge seal or bearing surfaces.**

    NOTE: The rear wheel bearing inner cone and roller (1244) is located behind the hub oil seal. A new hub seal must be installed each time the hub assembly is removed.

    If after hub removal, the hub seal or seal inner slinger remains on the spindle, remove it as shown.

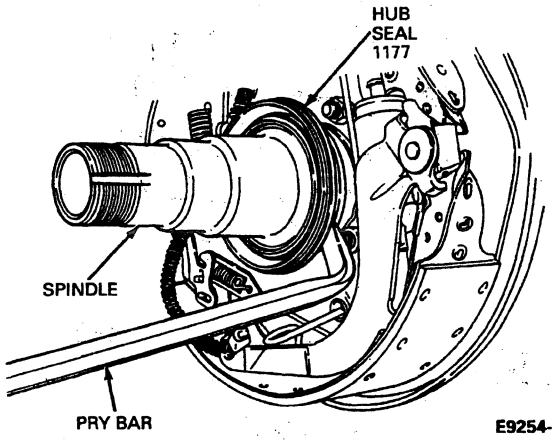

E9254-A

REMOVAL AND INSTALLATION (Continued)

14. Inspect seal surface for scratches or damage. Inspect inner shoulder for damage from bearing cone turning. Remove all scratches, gouges or galling damage with No. 600 or finer wet or dry sandpaper.

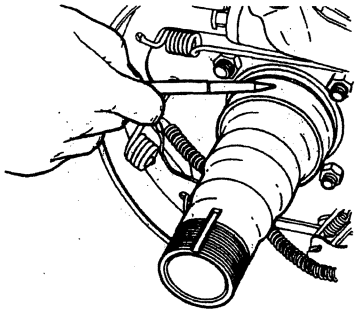

SEAL SURFACE

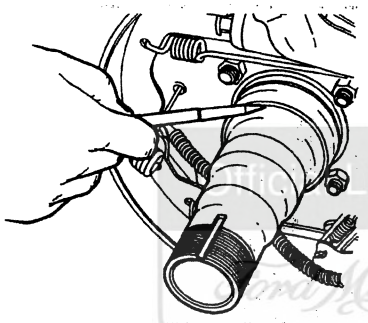

INNER SHOULDER E9255-A

Installation

1. Clean spindle thoroughly after removing rear hub, then coat the spindle with axle lubricant.
2. NOTE: Hub bearings must be prelubed with grease prior to installation. Use Premium Long-Life Grease XG-1-C or -K or equivalent meeting Ford specification ESA-M1C75-B.

   Pack each bearing cone and roller with a bearing packing tool, using Premium Long-Life Grease XG-1-C or -K or equivalent meeting Ford specification ESA-M1C75-B.
3. Fill the hub cavity with 29.6 ml (1 oz.) of clean motor oil.

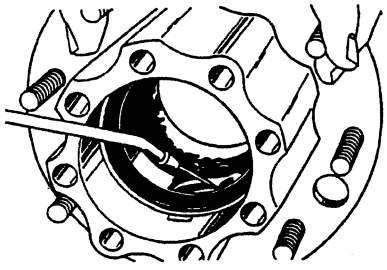

E9789-A

4. Coat the spindle with recommended axle lubricant.

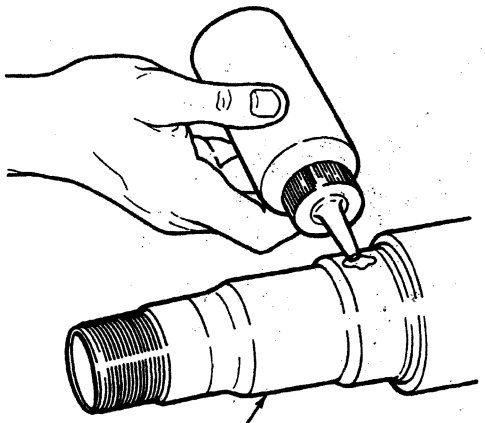

COAT SPINDLE WITH AXLE LUBRICANT E6506-1A

5. NOTE: Installing the rear hub in the following manner causes the hub outer bearing to act as a pilot, making the installation easier.

   Push rear hub (with hub outer bearing seated in outer cup) onto spindle.

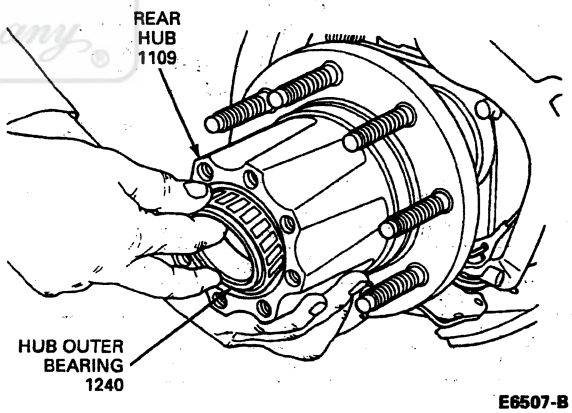

E6507-B

6. **CAUTION: A new hub nut must be installed if hub nut comes apart during installation or removal.**

   CAUTION: Make sure the hub nut tab is located in the keyway prior to thread engagement.

   Install the hub nut on the spindle. Turn hub nut clockwise for right-hand thread, counterclockwise for left-hand thread.

Ford Motor Company Licensed Product

REMOVAL AND INSTALLATION (Continued)

Hub Nut Installation

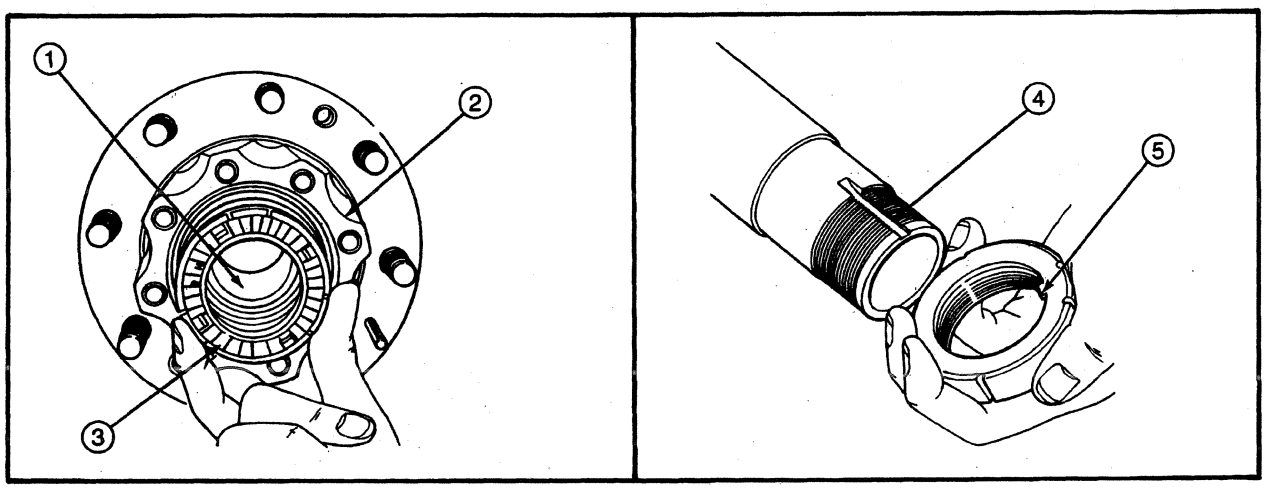

FULL FLOATING AXLE HUB NUTS

E6508-E

Item	Part Number	Description
1	—	Spindle (Part of 4010)
2	1109	Rear Hub
3	1A124	Hub Nut
4	—	Keyway (Part of 4010)

(Continued)

Item	Part Number	Description
5	—	Hub Nut Tab (Part of 1A124)
A	—	RH Thread (Install Clockwise)
B	—	LH Thread (Install Counterclockwise)

7. Install Locknut Wrench T85T-4252-AH on spindle.

REMOVAL AND INSTALLATION (Continued)

8. **CAUTION: After tightening hub nut to 75-88 N·m (55-65 lb-ft), ratchet back eight teeth or notches on the hub nut (1/6 turn). Eight clicks must be heard in order to have performed the procedure correctly.**

   NOTE: The hub nut will ratchet as torque is applied.

   Tighten hub nut to 75-88 N·m (55-65 lb-ft). Rotate rear hub occasionally while tightening. Ratchet back eight teeth or notches (1/6 turn) on the hub nut.

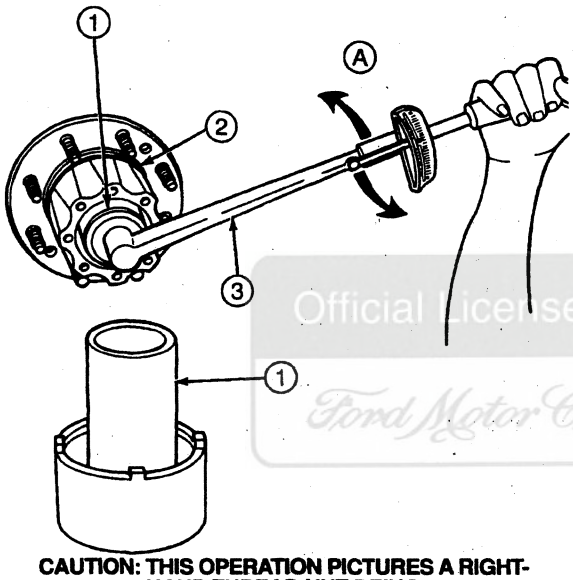

CAUTION: THIS OPERATION PICTURES A RIGHT-HAND THREAD NUT BEING TIGHTENED. REVERSE THIS PROCEDURE FOR LEFT-HAND THREAD NUT. **E8946-C**

Item	Part Number	Description
1	T85T-4252-AH	Locknut Wrench
2	1109	Rear Hub

(Continued)

Item	Part Number	Description
3	—	Torque Wrench
A	—	Tighten to 75-88 N·m (55-65 Lb-Ft); Back Off 8 Clicks (1/6 Turn)

9. Inspect axle shaft O-ring seal for cracks, nicks or wear and replace if required.
10. Install the axle shaft.
11. Coat the threads of all eight axle shaft retaining bolts with Loctite® or equivalent.
12. **CAUTION: Do not tighten the axle shaft bolts to specification at this time.**

    Install and tighten axle shaft retaining bolts only until they seat.

Official Licensed Product
Ford Motor Company

REMOVAL AND INSTALLATION (Continued)

Axle Shaft Installation

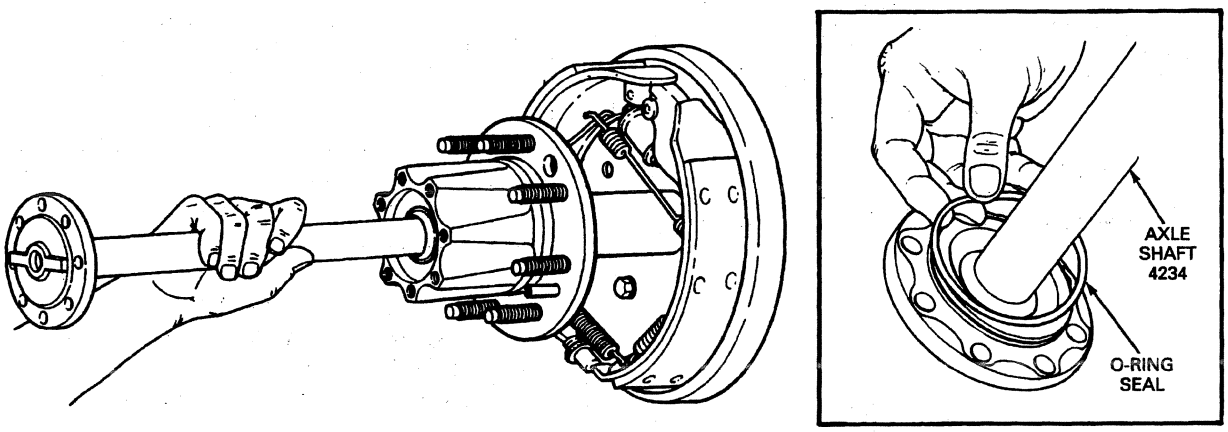

13. NOTE: Prior to installing brake drum, adjust brake so that brake diameter is 0.762 mm (0.030 inch) less than drum diameter.

    Install brake drum.

14. **CAUTION: Do not tighten lug nuts (1012) to specification at this time. Tighten only until they seat.**

    Install wheel, tire and lug nuts.

15. Loosen filler plug. If axle lube begins to seep out, retighten filler plug. If there is no lubricant seepage, remove filler plug and fill to bottom of filler plug hole with Premium Rear Axle Lubricant XY-80W90-QL or equivalent meeting Ford specification WSP-M2C197-A.
16. Wipe any particles off magnetic fill plug.
17. Install filler plug and tighten to 20-40 N·m (15-30 lb-ft).

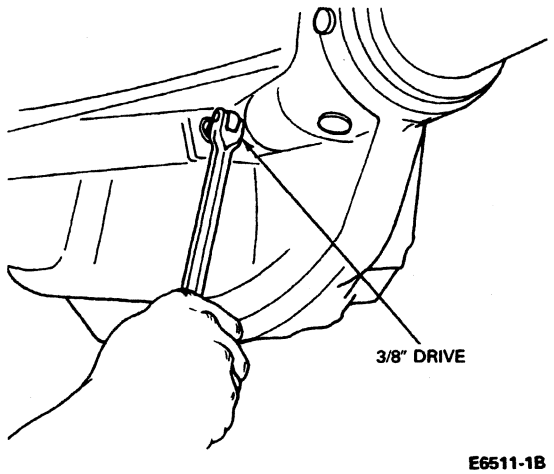

18. Lower the vehicle.
19. Make brake adjustments if necessary.
20. Tighten lug nuts to 170-230 N·m (126-170 lb-ft).
21. Tighten eight axle shaft retaining bolts to 95-115 N·m (75-85 lb-ft).

Official Licensed Product
Ford Motor Company

DISASSEMBLY AND ASSEMBLY

Hub, Full-Floating Axle

SPECIAL SERVICE TOOL(S) REQUIRED

Description	Tool Number
Bearing Cup Replacer	T75T-1225-A
Driver Handle	T80T-4000-W
Hub Inner Bearing Cup Replacer	T85T-1225-BH
Hub Seal Replacer	T93T-1175-AR

Disassembly

1. Install rear hub (1109) in soft-jawed vise.

DISASSEMBLY AND ASSEMBLY (Continued)

2. **CAUTION: Care must be taken not to damage hub seal bore with seal removal tool.**

   NOTE: The outer retaining ring can be dislodged during this procedure. If so, remove outer retaining ring and inner seal sleeve, and proceed to remove seal.

   Using a thin-bladed screwdriver, pry up seal from bottom of bore. Then use larger blade to finish removal.

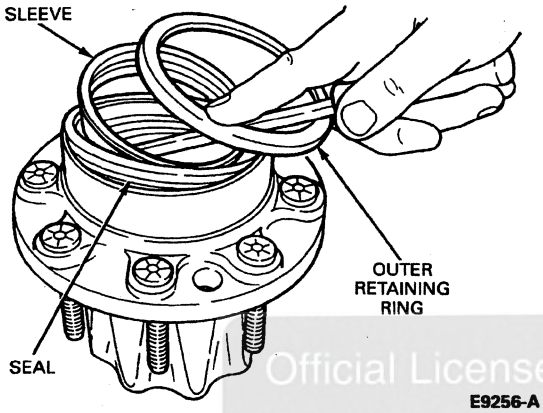

E9256-A

3. Remove rear wheel bearing oil slinger.

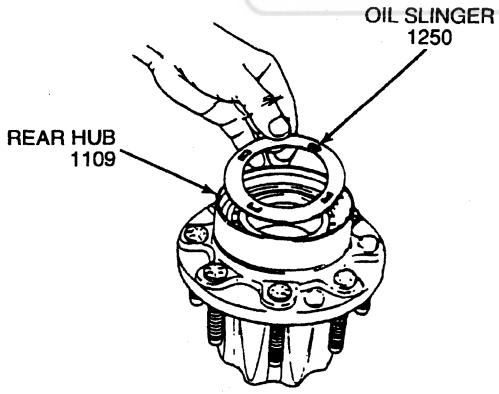

E9790-B

4. Remove rear wheel bearing inner cone and roller (1244).

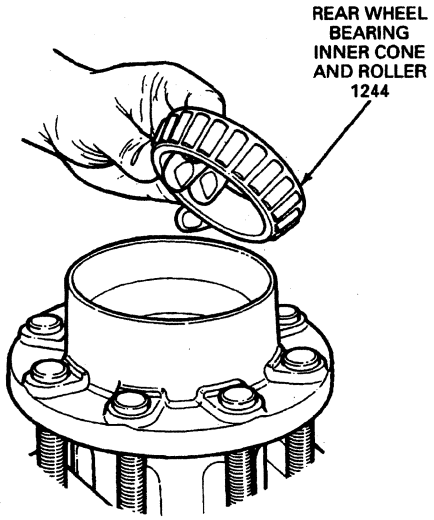

E6514-B

5. **CAUTION: Make sure rear hub is repositioned securely in vise.**

   Reposition the rear hub in the vise and remove the rear wheel bearing inner cup with a brass drift.

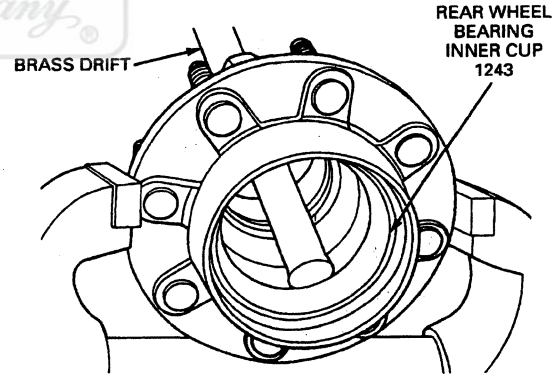

E6515-B

Official Licensed Product
Ford Motor Company

DISASSEMBLY AND ASSEMBLY (Continued)

6. Remove the hub outer bearing cup with a brass drift.

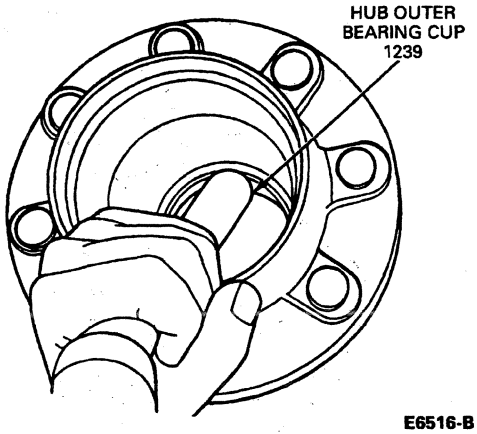

7. After the bearing cups have been removed, thoroughly clean hub bearing cavity and seal bore with cleaning solvent and dry.

Assembly

1. Place the outer bearing cup in the rear hub.
2. **CAUTION: Bearing Cup Replacer must be held straight during installation to make sure bearing cup seats properly.**

   Position Bearing Cup Replacer T75T-1225-A and Driver Handle T80T-4000-W squarely into rear hub and strike handle until outer bearing cup is fully seated.

Outer Bearing Cup Installation

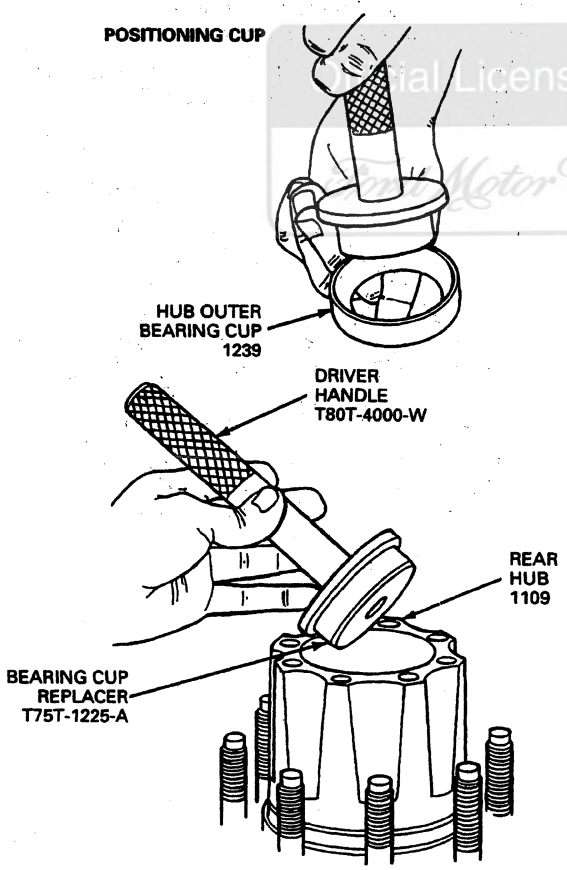

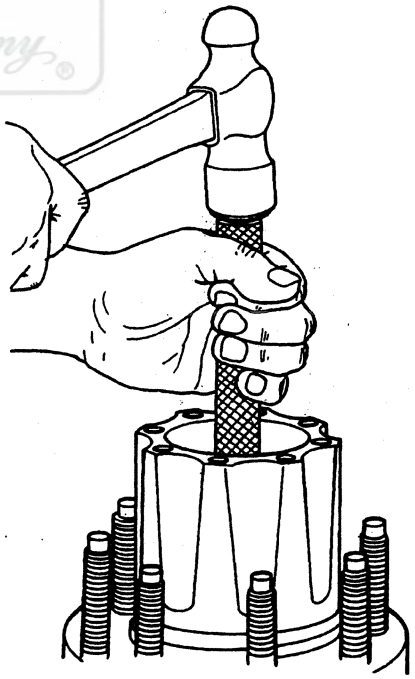

E6517-C

Ford Motor Company Licensed Product

3. Place the rear wheel bearing inner cup in the rear hub.

DISASSEMBLY AND ASSEMBLY (Continued)

4. **CAUTION: Bearing Cup Replacer must be held straight during installation to make sure bearing cup seats properly.**

   Position Hub Inner Bearing Cup Replacer T85T-1225-BH and Driver Handle T80T-4000-W squarely into rear hub and strike handle until inner bearing cup is seated.

Rear Wheel Bearing Inner Cup Installation

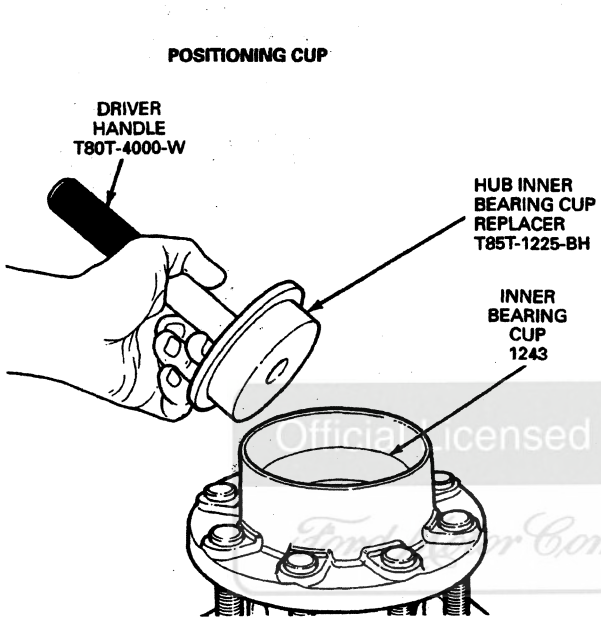

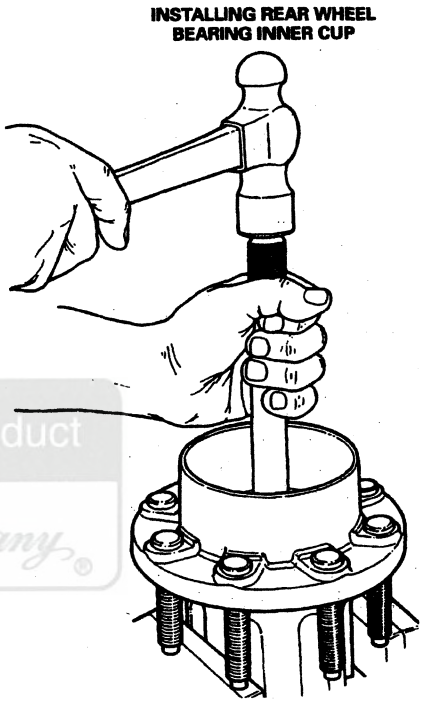

Official Licensed Product Ford Motor Company

5. **CAUTION: Make sure all sharp edges, nicks and burrs are removed. This step is important in order to avoid cutting new seal during installation.**

   Thoroughly inspect hub seal bore. Clean hub bore before installing hub inner bearing.

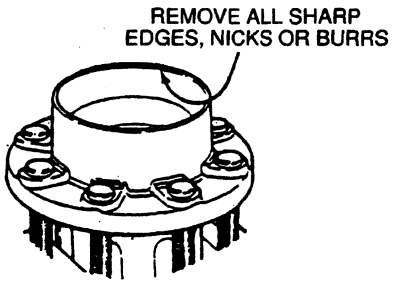

DISASSEMBLY AND ASSEMBLY (Continued)

6 NOTE Pack each bearing cone and roller assembly with a bearing packing tool using Premium Long-Life Grease XG-1-C or -K or equivalent meeting Ford specification ESA-M1C75-B

Place rear wheel bearing inner cone and roller in the cup

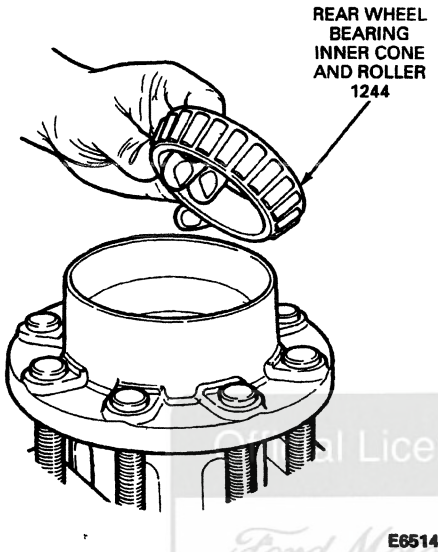

E6514-B

7 **CAUTION Do not coat seal bore with grease**

Lightly coat seal bore with clean motor oil

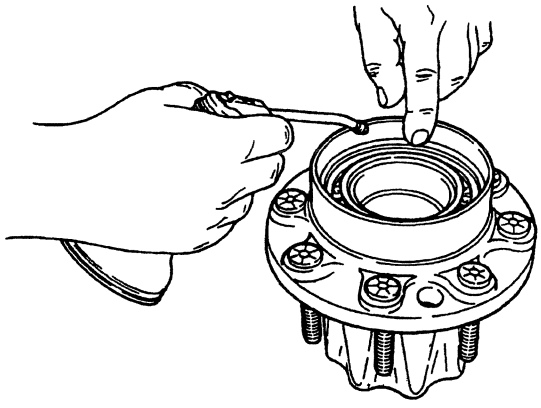

E9258-A

8 **CAUTION Hub seal and oil slinger must be free of dirt or grease before installation**

Position oil slinger on bearing cone with tabs pointing toward bearing

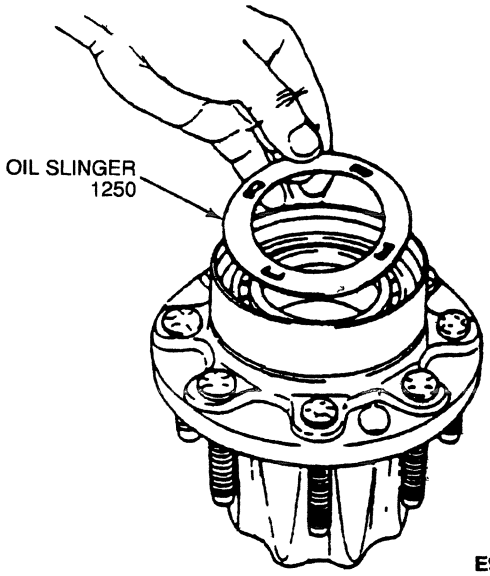

E9792-A

9 Install hub seal on Hub Seal Replacer T93T-1175-AR

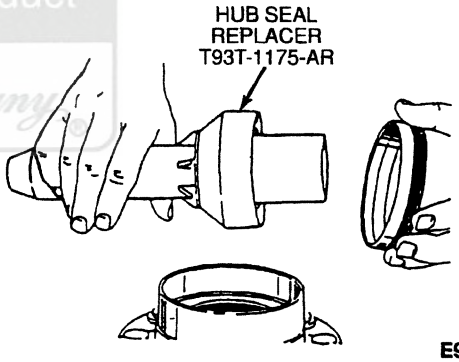

E9793-A

10 Lightly coat hub seal outer diameter with clean motor oil

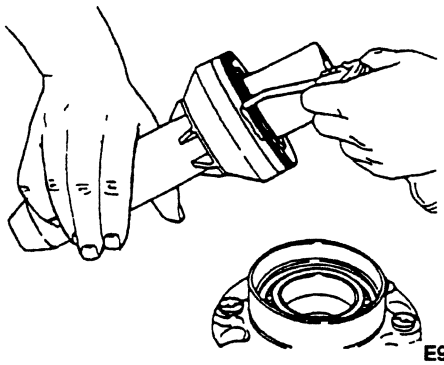

E9794-A

Digital Licensed Product
Ford Motor Company

DISASSEMBLY AND ASSEMBLY (Continued)

11. **CAUTION: Install new seal if seal is cocked during or after installation.**

    NOTE: Make sure hub is located on a solid surface before attempting to install seal.

    Position installer tool with seal on hub.

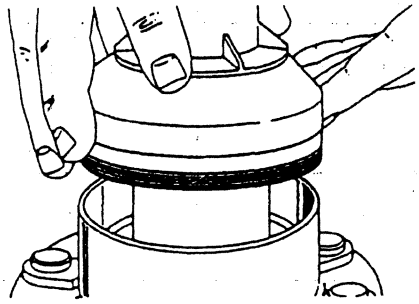

E9795-A

12. Insert tool with seal squarely into hub. Hold tool straight. Strike handle until hub seal is fully seated.

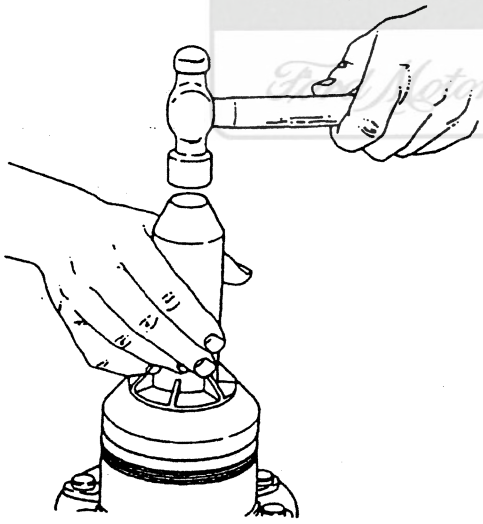

E9796-A

13. Wipe seal and hub area as shown and inspect the seal inner diameter to make sure it is clean and that the seal is installed squarely in the bore. Apply a light coat of clean motor oil to the seal inner diameter before installing the hub assembly on the spindle.

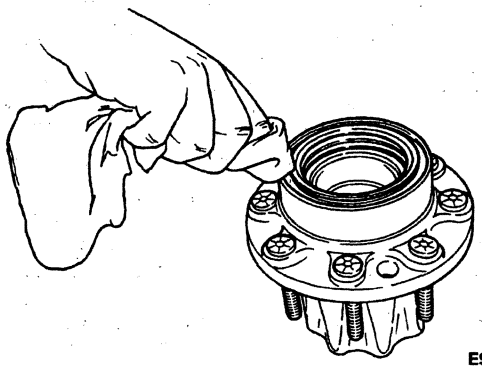

E9262-A

SPECIFICATIONS

LUBRICANT/ADHESIVE/CLEANER SPECIFICATIONS

Description	Part Number	Ford Specification
Premium Long-Life Grease	XG-1-C or -K	ESA-M1C75-B
Premium Rear Axle Lubricant	XY-80W90-QL	WSP-M2C197-A
Friction Modifier	C8AZ-19B546-A	EST-M2C-118-A
Threadlock® and Sealer	EOAZ-19554-AA	WSK-M2G315-A5 (Type II)

REAR AXLE LUBRICANT SPECIFICATIONS AND CAPACITIES

Vehicle	Approximate Capacity		
	Liters	U.S. Pints	Imperial Pints
F-250 Heavy Duty, F-350 (4x2 and 4x4) — Dual Rear Wheels	3.5	7.4	6.1
F-250 Heavy Duty, F-350 (4x4)	3.5	7.4	6.1

NOTE: Use Premium Rear Axle Lubricant XY-80W90-QL or -KL or equivalent meeting Ford specification WSP-M2C197-A. Add 8 U.S. ounces of Ford Friction Modifier C8AZ-19B546-A or equivalent meeting Ford specification EST-M2C-118-A.

TORQUE SPECIFICATIONS

Description	N·m	Lb-Ft
Hub Nut[a]	75-88	55-65
Wheel Lug Nut (Both Single and Dual Rear Wheel) — Eight Lug	170-230	126-170
Axle Shaft-to-Hub Bolts	95-115	75-85
Filler Plug	20-40	15-30
Axle Housing Cover Screws	38-52	28-38
Ring Gear Bolts	136-163[b]	100-120[b]
Rear Brake Anti-Lock Sensor Bolt	34-40	25-30
Differential Bearing Cap Bolt	109-129	80-95

(Continued)

SPECIFICATIONS (Continued)

TORQUE SPECIFICATIONS (Cont'd)

Description	N·m	Lb-Ft
Rear Axle Housing Vent	20	15
Differential Pinion Shaft Lock Pin	20-40[b]	15-30[b]

a Critical torque information: After tightening hub nut to 75-88 N·m (55-65 lb-ft), ratchet back eight teeth or notches on the hub nut (1/6 turn). Eight clicks must be heard during this operation in order to have performed it correctly.
b Apply Threadlock and Sealer EOAZ-19554-AA or equivalent meeting Ford specification WSK-M2G315-A5 (Type II).

SPECIAL SERVICE TOOLS/EQUIPMENT

SPECIAL SERVICE TOOLS REQUIRED

Tool Number/ Description	Illustration
T75T-1225-A Bearing Cup Replacer	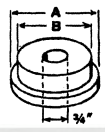 T75T-1225-A
T80T-4000-W Driver Handle	T80T-4000-W

(Continued)

SPECIAL SERVICE TOOLS REQUIRED (Cont'd)

Tool Number/ Description	Illustration
T85T-1225-BH Hub Inner Bearing Cup Replacer	T85T-1225-BH
T85T-4252-AH Locknut Wrench	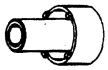 T85T-4252-AH
T93T-1175-AR Hub Seal Replacer	T93T-1175-A

SPECIAL SERVICE TOOLS DESIRED

Tool Number	Description
D80L-630-A	Step Plate Adapter Set
D80L-1002-L	2-Jaw Puller Tool

Official Licensed Product
Ford Motor Company

SECTION 05-02B Differential, Limited Slip, Ford 10.25-Inch Ring Gear

SUBJECT	PAGE
VEHICLE APPLICATION	05-02B-1
DESCRIPTION AND OPERATION	
Differential, Limited Slip	05-02B-1
DIAGNOSIS AND TESTING	
Differential, Limited Slip	05-02B-2
REMOVAL AND INSTALLATION	
Differential Bearings	05-02B-2
DISASSEMBLY AND ASSEMBLY	
Differential Case	05-02B-3
SPECIFICATIONS	05-02B-10
SPECIAL SERVICE TOOLS/EQUIPMENT	05-02B-10

VEHICLE APPLICATION

F-250 Heavy Duty and F-350

DESCRIPTION AND OPERATION

Differential, Limited Slip

The Ford limited slip differential option is available on F-250 Heavy Duty and F-350 vehicles with 10.25-inch ring gear rear axles.

NOTE: Overhaul of the Traction-Loc® differential must be performed with the differential assembly removed from the differential housing.

The limited slip assembly is identical to the conventional rear axle (4001) except for the differential case (4204) and its internal components. The limited slip differential (4026) employs two sets of multiple-disc clutches to control differential action. The differential side gear (4236) mounting distance is controlled by 10 clutch plates on each side: 5 friction, 5 steel plus one steel rear axle differential clutch shim (4A324) and one tabbed Belleville differential clutch spring (4214) to provide an initial force to the clutch pack. The differential clutch shim is used to control the position of the differential gear. The differential clutch pack consists of two plate designs: a splined clutch plate that engages the splines of the side gear hub, and alternate-tabbed or stationary clutch plates.

Do not intermix the clutch plates and clutch discs.

LIMITED SLIP DIFFERENTIAL-CUTAWAY VIEW

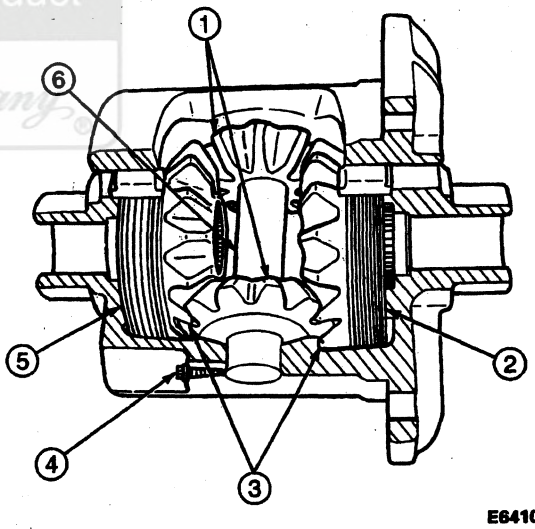

E6410-B

Item	Part Number	Description
1	4215	Differential Pinion Gear
2	4880	Differential Clutch Pack
3	4236	Differential Side Gear
4	4241	Differential Pinion Shaft Lock Bolt
5	4880	Differential Clutch Pack
6	4211	Differential Pinion Shaft

DIAGNOSIS AND TESTING

Differential, Limited Slip

Refer to Section 05-00.

REMOVAL AND INSTALLATION

Differential Bearings

SPECIAL SERVICE TOOL(S) REQUIRED

Description	Tool Number
Front Hub Remover/Replacer	T81P-1104-C

NOTE: It is not necessary to remove the differential bearings (4221) as a part of the differential case disassembly procedure.

Removal

1. NOTE: Differential Case Bearing Remover D97L-4221-A may be used in place of tool T81P-1104-C and D79L-4621-A.

   Mount the differential case (4204) in a vise. Use brass pads on vise jaws to prevent damage. Mount split-type pinion bearing cone remover (Bearing Pulling Attachment D79L-4621-A or equivalent) on the differential case. Tighten bolts on puller to separate the bearing cone from the case face.

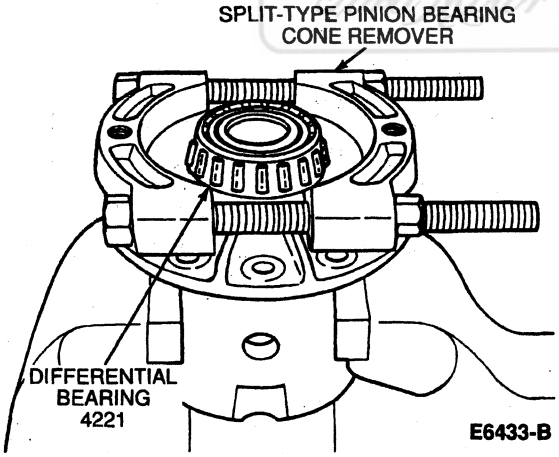

2. Place Step Plate D80L-630-6 (part of Step Plate Adapter Set D80L-630-A) or equivalent on bearing inner cone. Apply a small amount of grease to the step plate bore.

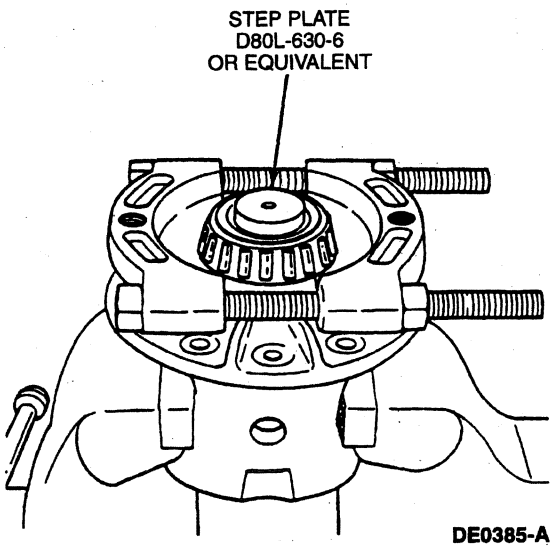

3. **CAUTION: It is extremely important to apply a liberal amount of oil to the screw threads of the remover/replacer.**

   Mount Front Hub Remover/Replacer T81P-1104-C on the bearing cone remover, making sure the remover/replacer shaft seats in the bore of the step plate. Pull the differential bearing off the differential case.

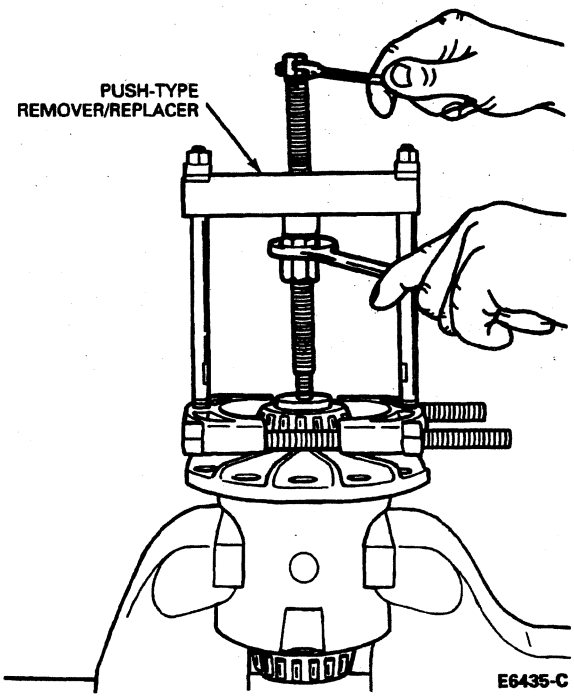

4. Replace differential bearings whenever they are removed from the differential (4026).

REMOVAL AND INSTALLATION (Continued)

Installation

1. NOTE: When performing the following procedure, press against the differential bearing cone only.

   Install differential bearings on the case hubs using Differential Bearing Cone Replacer D81T-4221-A or equivalent.

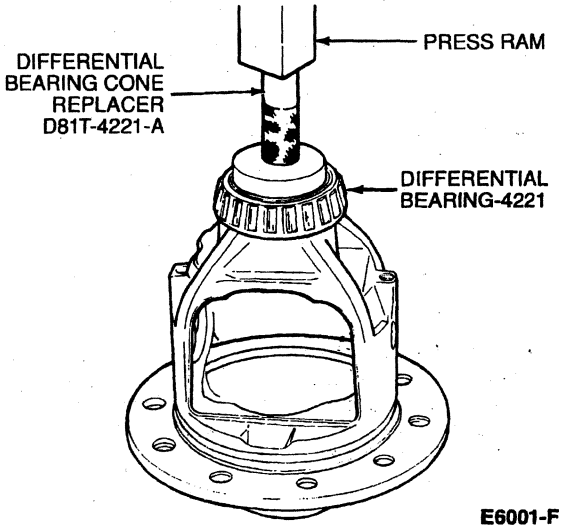

E6001-F

DISASSEMBLY AND ASSEMBLY

Official Licensed Product
Ford Motor Company

Differential Case

SPECIAL SERVICE TOOL(S) REQUIRED

Description	Tool Number
Limited Slip Differential Rotating Tool	T86T-4205-A
Traction-Loc® Clutch Gauge Set	T80P-4946-A
Traction-Loc® Clutch Gauge	T97T-4946-AH

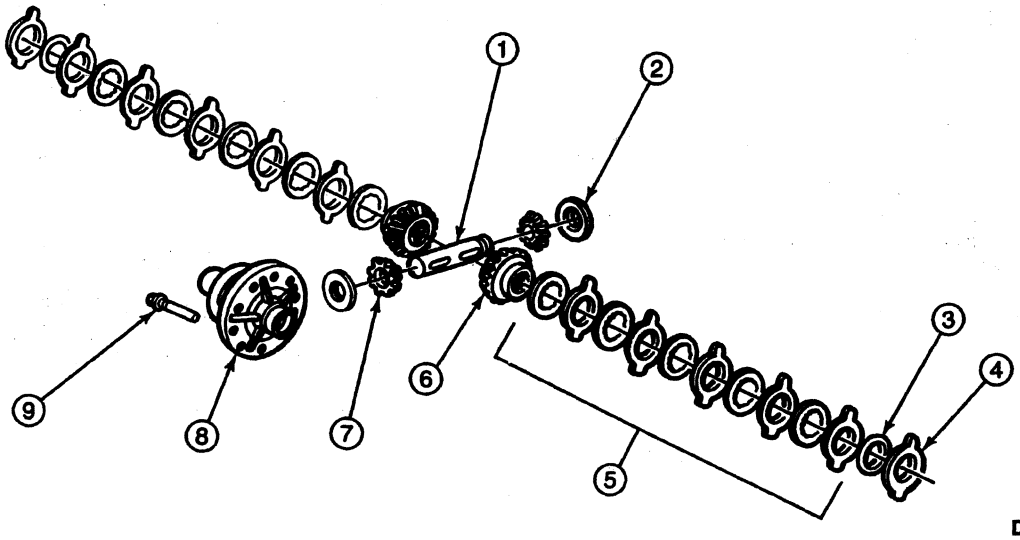

DE0386-A

DISASSEMBLY AND ASSEMBLY (Continued)

Item	Part Number	Description
1	4211	Differential Pinion Shaft
2	4230	Differential Pinion Thrust Washer
3	4A324	Differential Clutch Shim
4	4214	Rear Axle Differential Belleville Spring

(Continued)

Item	Part Number	Description
5	4767	Differential Clutch Pack
6	4236	Differential Side Gear
7	4215	Differential Pinion Gear
8	4205	Differential Case
9	4241	Differential Pinion Shaft Lock Pin

Disassembly

1. NOTE: The differential bearings (4221) need not be removed to overhaul the Ford limited slip differential. If bearing removal is required, refer to Differential Bearings in the Removal and Installation portion of this section.

   Remove the differential pinion shaft lock pin.

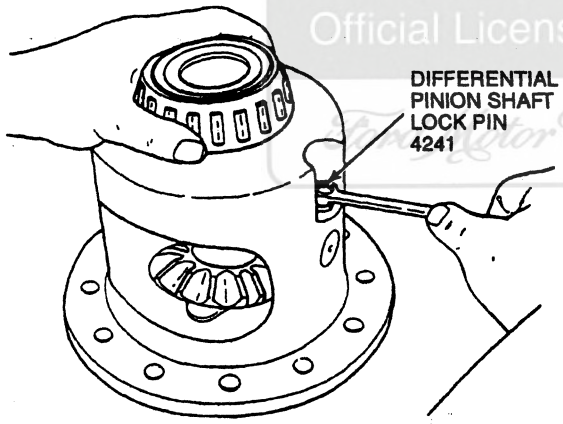

DE0290-A

2. Install Limited Slip Differential Tool D83T-4205-A or equivalent in a suitable vise. Place differential case (4204) on holding tool with the ring gear side facing up.

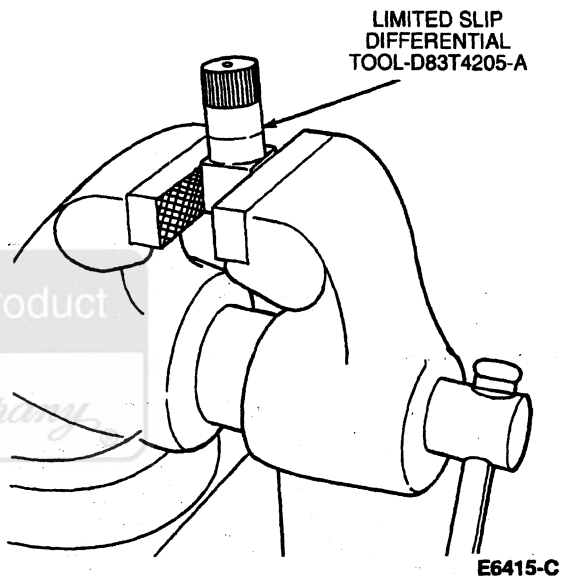

E6415-C

3. With a hammer and drift, drive the differential pinion shaft (4211) from the differential case.

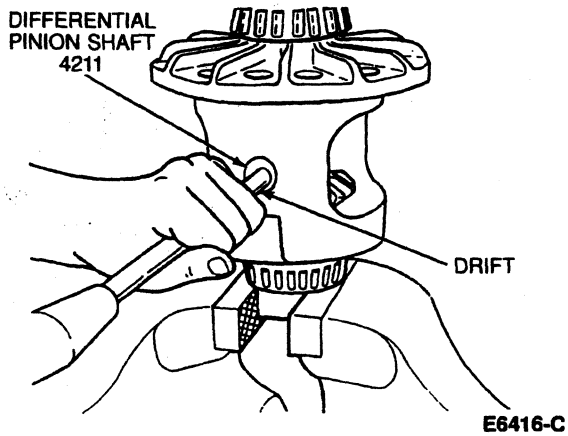

E6416-C

Official Licensed Product
Ford Motor Company

DISASSEMBLY AND ASSEMBLY (Continued)

4. Install Step Plate D80L-630-6 (from D83T-4205-C) or equivalent in bottom side gear bore. Apply a small amount of grease to centering hole of the step plate.

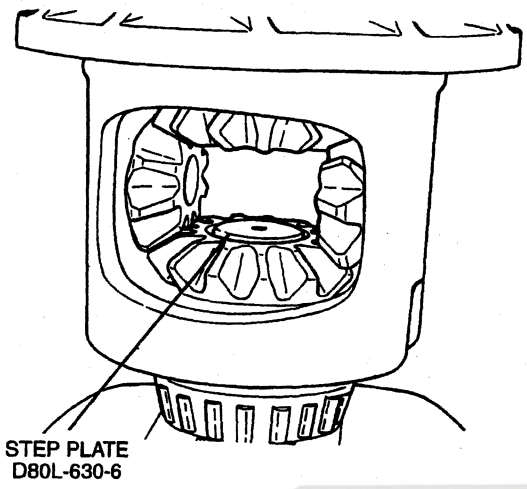

DE0387-A

5. Install nut (D83T-4205-C1) in upper differential side gear (4236). Hold nut in position while installing hex-head screw. Tighten screw until contact is made with the step plate.

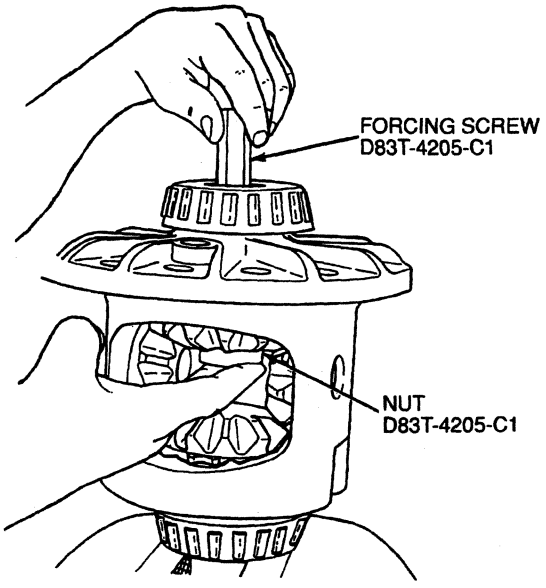

E6418-C

6. Insert Driver Handle (D83T-4205-C3) in hole of nut. Tighten forcing screw (D83T-4205-C1) to force differential side gear away from the differential pinion gears (4215). The driver handle is used to keep the nut from turning when the forcing screw is tightened.

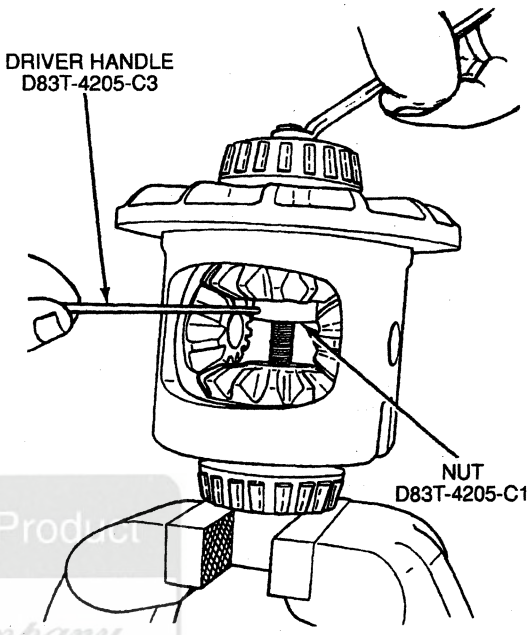

E6419-C

7. **WARNING: KEEP FINGERS AWAY FROM PINION GEARS WHEN ROTATING DIFFERENTIAL CASE WITH DIFFERENTIAL ROTATING TOOL.**

   Insert Limited Slip Differential Rotating Tool T86T-4205-A in the pinion shaft bore, and turn the differential case to "walk" the differential pinion gears and thrust washers out to the differential case windows.

Ford Motor Company

DISASSEMBLY AND ASSEMBLY (Continued)

8. Remove the differential pinion gears.

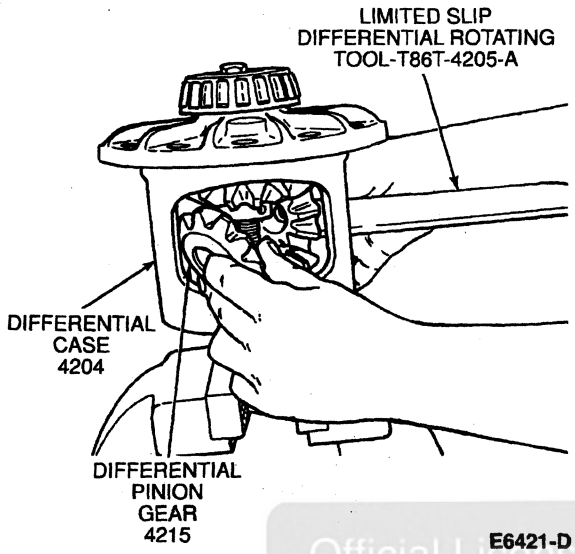

E6421-D

9. Remove the forcing screw, nut and step plates. Remove the differential side gears and differential clutch packs.

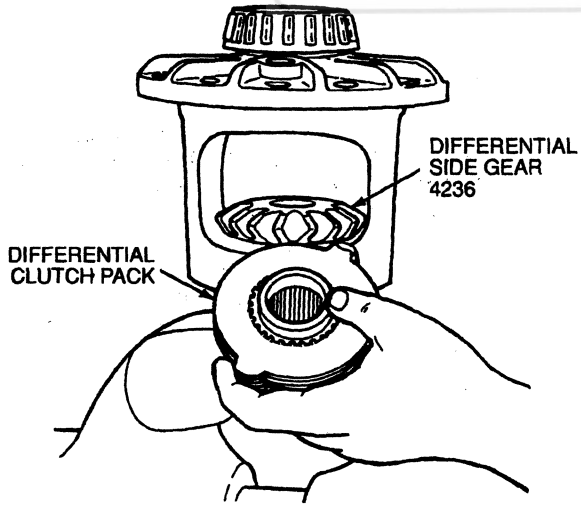

DE0388-A

Assembly

CAUTION: When separating the clutch plates and clutch discs, note the sequence in which they are disassembled. They must be reassembled in the same sequence.

1. NOTE: Do not use acids or solvents when cleaning differential clutch pack. Wipe components with a clean, lint-free cloth only.

   Clean and inspect the differential clutch packs for wear, and replace parts as necessary.

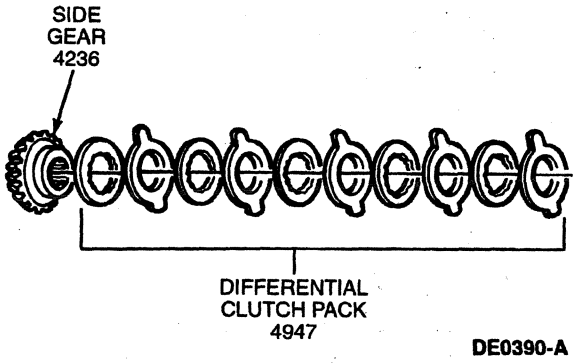

DE0390-A

2. **CAUTION: Prelubricate all friction clutch plates with Ford Friction Modifier C8AZ-19B546-A or equivalent meeting Ford specification EST-M2C118-A by soaking the plates for 15 minutes prior to assembly.**

   NOTE: Do not mix differential clutch packs or rear axle differential clutch shims from one side with the other.

   Prelubricate each clutch disc and clutch plate.

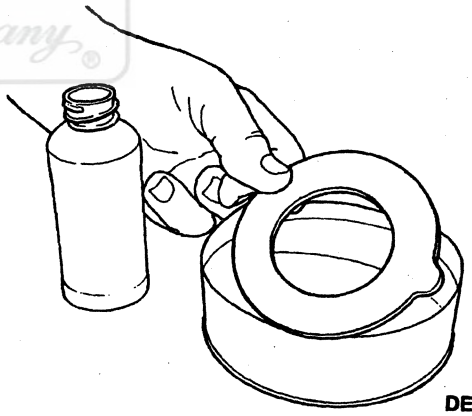

DE0389-A

Official Licensed Product
Ford Motor Company

DISASSEMBLY AND ASSEMBLY (Continued)

3. Assemble the differential clutch packs without rear axle differential clutch shims and Belleville springs on the respective differential side gears.

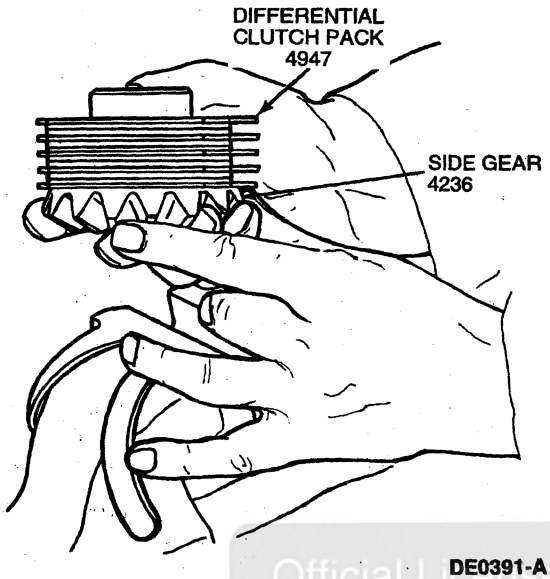

DE0391-A

4. Place the base portion of Traction-Loc® Clutch Gauge T97T-4946-AH in a vise. Install the differential clutch pack and differential side gear (without the rear axle differential clutch shim and Belleville spring) over the base.

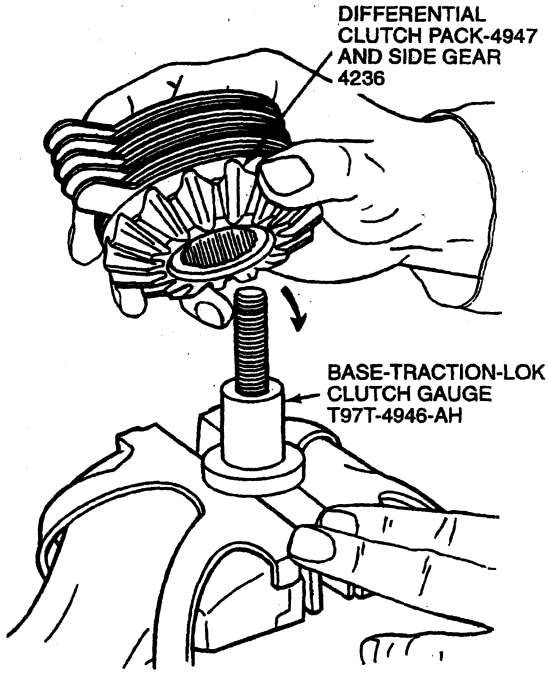

DE0392-A

5. Install the disc of Traction-Loc® Clutch Gauge T80P-4946-A over the base and on top of the differential clutch pack.

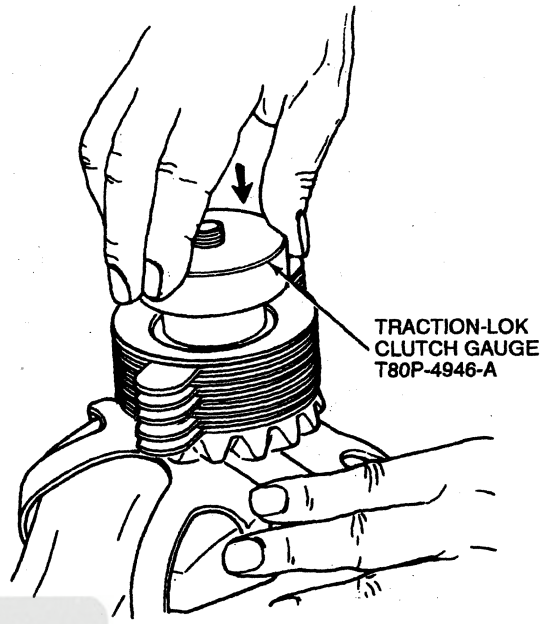

DE0393-A

6. Install the top portion of Traction-Loc® Clutch Gauge T80P-4946-A over the disc and base stud.

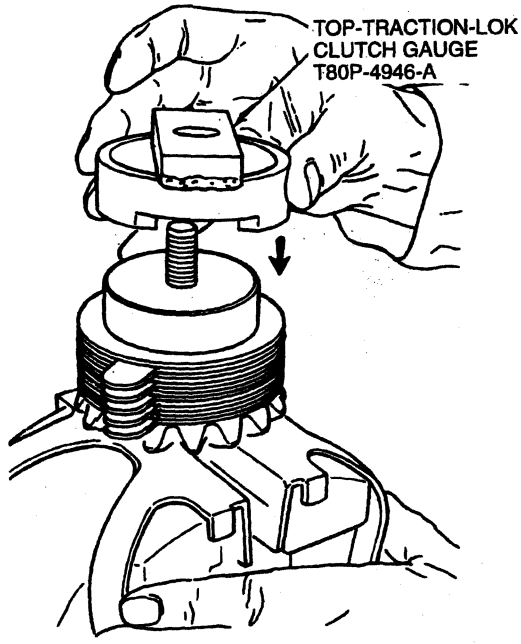

DE0394-A

Official Licensed Product

DISASSEMBLY AND ASSEMBLY (Continued)

7. Install the nut of the gauge over the top and base stud. Tighten the nut to 6.7N·m (60 lb-in).

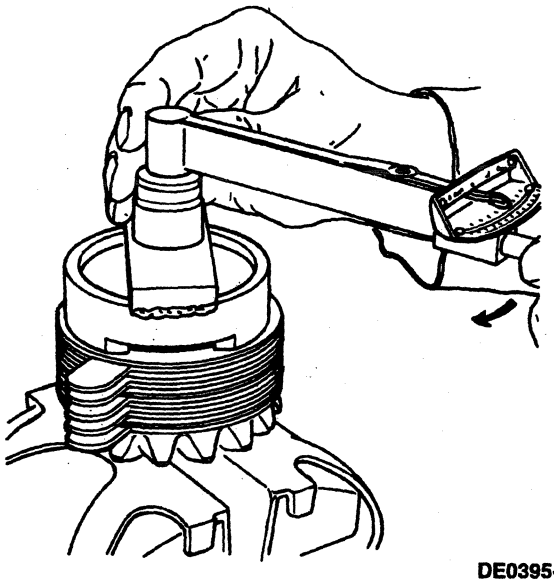

DE0395-A

8. Using Feeler Gauge D81L-4201-A or equivalent, select the thickest blade that will enter between the tool and the differential clutch pack. This reading will be the thickness of the new rear axle differential clutch shim.

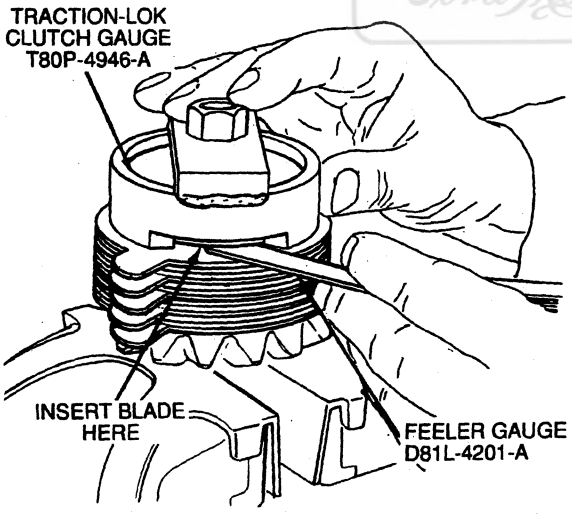

DE0396-A

SELECTIVE SHIMS FOR 10.25-INCH RING GEAR

Part Number	mm	Inch
F7TW-4A324-AA	0.38	0.015
F7TW-4A324-BA	0.50	0.020

(Continued)

SELECTIVE SHIMS FOR 10.25-INCH RING GEAR (Cont'd)

Part Number	mm	Inch
F7TW-4A324-CA	0.63	0.025
F7TW-4A324-DA	0.76	0.030
F7TW-4A324-EA	0.88	0.035
F7TW-4A324-FA	1.00	0.040
F7TW-4A324-GA	1.14	0.045
F7TW-4A324-HA	1.27	0.050
F7TW-4A324-JA	1.39	0.055
F7TW-4A324-KA	1.52	0.060

9. Prelubricate the thrust face of the differential side gears. Assemble the clutch plates and clutch discs to the side gear splines in exactly the same sequence in which they were removed.
10. Install Limited Slip Differential Tool (holding tool) D83T-4205-A or equivalent in a suitable vise. Place differential case on holding tool with ring gear side facing up. Insert the differential clutch packs and differential side gears into the differential case. Make sure the differential clutch packs stay assembled to the side gear splines. Hold the upper clutch pack and side gear assembly in place to prevent it from falling out of the differential case.

Licensed Product
Ford Motor Company

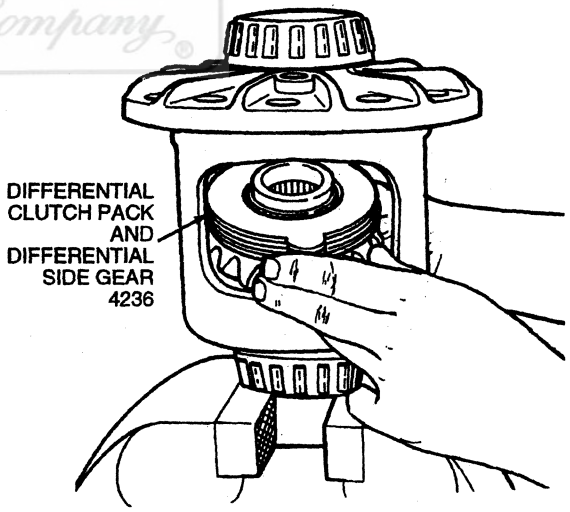

DE0397-A

DISASSEMBLY AND ASSEMBLY (Continued)

11 Position step plate in the bottom side gear bore Apply a small amount of grease to the step plate bore Position nut in the top side gear bore and hold it in place Install the hex-head forcing screw and tighten it two turns after it contacts the bottom step plate Insert the dowel bar in nut bore to keep the nut from turning as the hex-head forcing screw is tightened

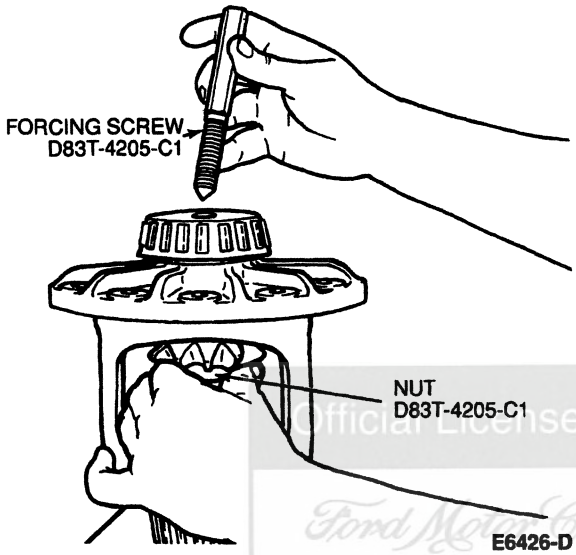

12 Position the differential pinion gears and thrust washers in the window of the differential case so that they mesh with the differential side gear teeth Hold the differential pinion gears in place Make sure the differential pinion gears are 180 degrees apart so they will align correctly with the pinion shaft bore

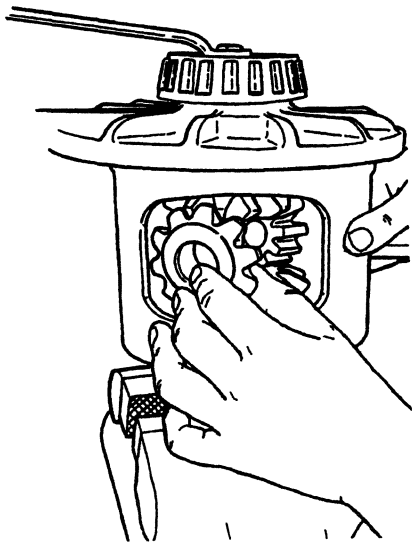

13 **WARNING. KEEP FINGERS AWAY FROM PINION GEARS WHEN ROTATING DIFFERENTIAL CASE WITH DIFFERENTIAL ROTATING TOOL.**

NOTE It will probably be necessary to loosen or tighten the forcing screw to allow the differential pinion gears and differential side gears to rotate

Insert the rotating handle (T86T-4205-A) into the pinion shaft bore and turn the differential case This will cause the differential pinion gears to engage the differential side gears and "walk" into the differential case Rotate the differential case until the pinion mating shaft holes are lined up exactly with the holes in the differential pinion gears

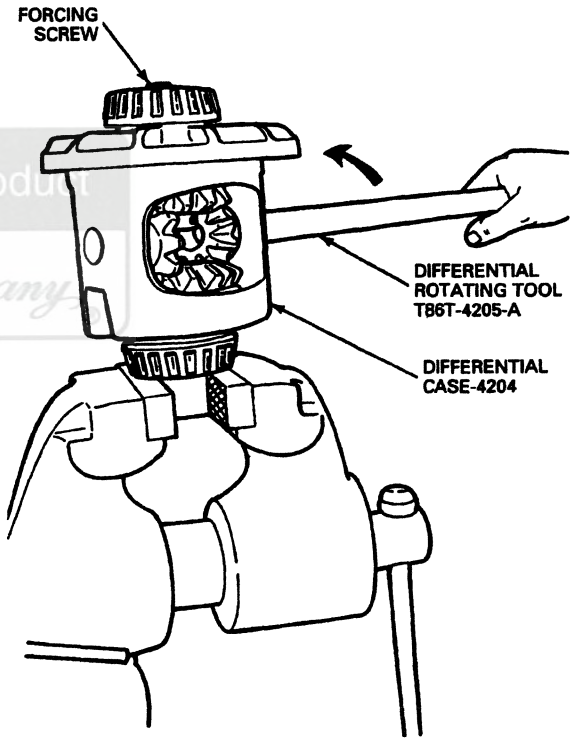

14 Loosen the forcing screw and remove the step plate and nut from the side gear bores Install the differential pinion shaft in the differential case Install the differential pinion shaft lock pin and tighten to 20-40 N·m (15-30 lb-ft), using Loctite® EOAZ-19554-B or equivalent

Official Licensed Product
Ford Motor Company

DISASSEMBLY AND ASSEMBLY (Continued)

15. If removed, install the ring gear on the differential case and tighten the retaining bolts to 136-163 N·m (100-120 lb-ft).

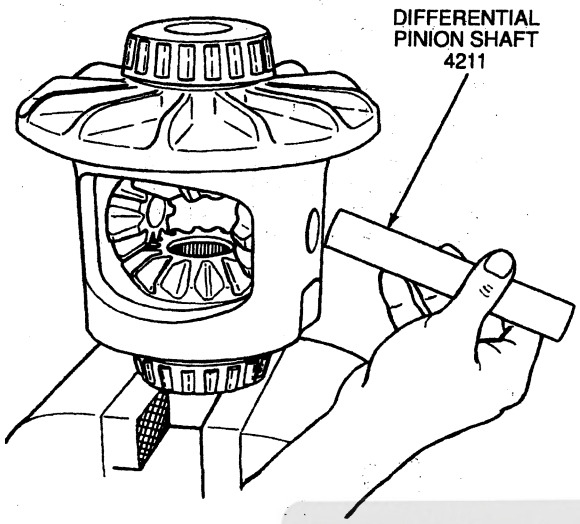

SPECIFICATIONS

LUBRICANT/ADHESIVE/CLEANER SPECIFICATIONS

Description	Part Number	Ford Specification
Additive Friction Modifier	C8AZ-19B546-A	EST-M2C118-A
Premium Rear Axle Lubricant	XL-80W90-QL or -KL	WSP-M2C197-A
Loctite®	EOAZ-19554-B	—

LUBRICANT CAPACITIES

Approximate Lubricant Capacity (In-Vehicle Repair) [ab]		
Liters	U.S. Pints	Imperial Pints
3.0	6.5[cd]	5.4

a Ford design conventional axles use Premium Rear Axle Lubricant XY-80W90-QL or -KL or equivalent meeting Ford specification WSP-M2C197-A.
b Service refill capacities are determined by filling the axle with the specified lubricant to the bottom of the filler hole with the vehicle in running position.
c Plus 8 oz. (U.S. measure) Additive Friction Modifier C8AZ-19B546-A or equivalent meeting Ford specification EST-M2C118-A for limited slip applications.
d Rear axle lube quantities must be replaced every 160 000 km (100,000 miles) or if the axle has been submerged in water. Otherwise, the lube should not be checked or changed unless a leak is suspected or service required.

NOTE: The lubricant fill specification is 3.0 liters (6.5 pints) when the axle is installed in the vehicle. If the axle is out of the vehicle, fill with 3.5 liters (7.5 pints) of specified lubricant.

TORQUE SPECIFICATIONS (INTEGRAL CARRIER)

Description	N·m	Lb-Ft
Differential Bearing Cap Bolt	109-129	80-95
Differential Pinion Shaft Lock Pin Using Loctite® EOAZ-19554-B or Equivalent	20-40	15-30
Ring Gear Retaining Bolts Using Loctite® EOAZ-19554-B or Equivalent	136-163	100-120

SPECIAL SERVICE TOOLS/EQUIPMENT

SPECIAL SERVICE TOOLS REQUIRED

Tool Number/ Description	Illustration
T80P-4946-A Traction-Loc® Clutch Gauge Set	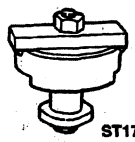 ST1733-A
T81P-1104-C Front Hub Remover/Replacer	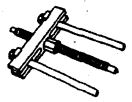 T81P-1104-C
T86T-4205-A Limited Slip Differential Rotating Tool	T86T-4205-A
T97T-4946-AH Traction-Loc® Clutch Gauge	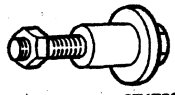 ST1732-A

SPECIAL SERVICE TOOLS DESIRED

Tool Number	Description
D79L-4621-A	Bearing Pulling Attachment
D80L-630-6	Step Plate
D80L-630-A	Step Plate Adapter Set
D81L-4201-A	Feeler Gauge
D81T-4221-A	Differential Bearing Cone Replacer
D81T-4222-ER	Dummy Differential Bearings (Pair)
D83T-4205-A	Limited Slip Differential Tool
D83T-4205-C1	Forcing Screw and Nut
D83T-4205-C3	Driver Handle

Official Licensed Ford Motor Company

SECTION 05-02C Axle, Rear, Dana

SUBJECT	PAGE
VEHICLE APPLICATION	05-02C-1
DESCRIPTION AND OPERATION	
Axle, Rear, Dana	05-02C-1
DIAGNOSIS AND TESTING	
Axle, Rear Dana	05-02C-3
REMOVAL AND INSTALLATION	
Axle Shaft, Rear, Full-Floating Axle	05-02C-6
Axle, Rear	05-02C-6
Drive Pinion Seal	05-02C-3
Oil Seal and Wheel Bearing, Full-Floating Axle	05-02C-6
DISASSEMBLY AND ASSEMBLY	
Assembly of Differential into Housing	05-02C-21
Ring Gear and Pinion Backlash	05-02C-21
Axle Assembly	05-02C-13
Differential Case Assembly	05-02C-13
Differential Case End Play Check	05-02C-15
Pinion Bearing Cup Installation	05-02C-17
Pinion Position Shim Selection	05-02C-18
Pinion Ring Gear Variation Number	05-02C-16
Axle Disassembly	05-02C-6
Differential Case Disassembly	05-02C-8

SUBJECT	PAGE
DISASSEMBLY AND ASSEMBLY (Cont'd.)	
Differential Case Removal	05-02C-6
Drive Pinion Removal	05-02C-10
Pinion Bearing Cup Removal	05-02C-11
CLEANING AND INSPECTION	
Inspection After Disassembly	05-02C-24
Bearing Cups	05-02C-24
Brake Sensor Ring, Anti-Lock	05-02C-24
Carrier Housing	05-02C-24
Cone and Roller Assemblies	05-02C-24
Differential Case	05-02C-24
Gears	05-02C-24
Pinion Flange (End Yoke)	05-02C-24
Inspection Before Disassembly	05-02C-23
ADJUSTMENTS	
Ring Gear and Pinion Backlash	05-02C-24
Ring Gear and Pinion Tooth Pattern	
Interpretation	05-02C-26
Gear Tooth Contact Pattern Check	05-02C-26
SPECIFICATIONS	
Fasteners	05-02C-27
SPECIAL SERVICE TOOLS/EQUIPMENT	05-02C-28

Official Licensed Product
Ford Motor Company

VEHICLE APPLICATION

F-Super Duty

DESCRIPTION AND OPERATION

Axle, Rear, Dana

Model 80 rear axles (4001) are equipped with full-floating axle shafts (4234), meaning loads are supported by the axle housing. These rear axles have an integral-type axle housing, hypoid gear design with the centerline of the pinion set below the centerline of the ring gear. The axle shaft is retained by bolts attached to the rear hub (1109). The rear hub rides on two bearings at the outboard end. The axle housing consists of a cast center section with two steel tubes. A stamped axle housing cover (4033) uses silicone rubber or equivalent as a gasket. A metal tag, attached to axle housing by two cover bolts, is stamped with the gear ratio and part numbers.

Dana Model 80 Full-Floating Rear Axle

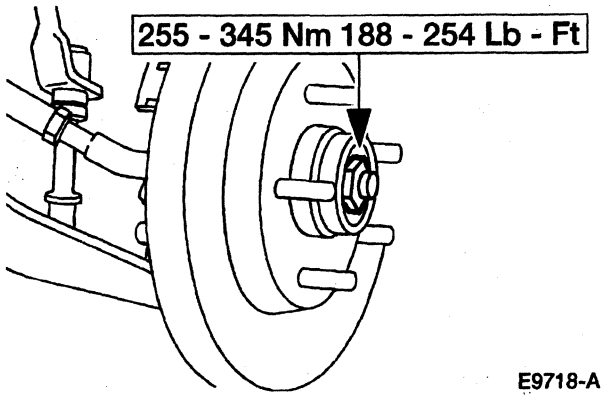

E9718-A

DESCRIPTION AND OPERATION (Continued)

Dana Model 80 Full-Floating Rear Axle, Disassembled View

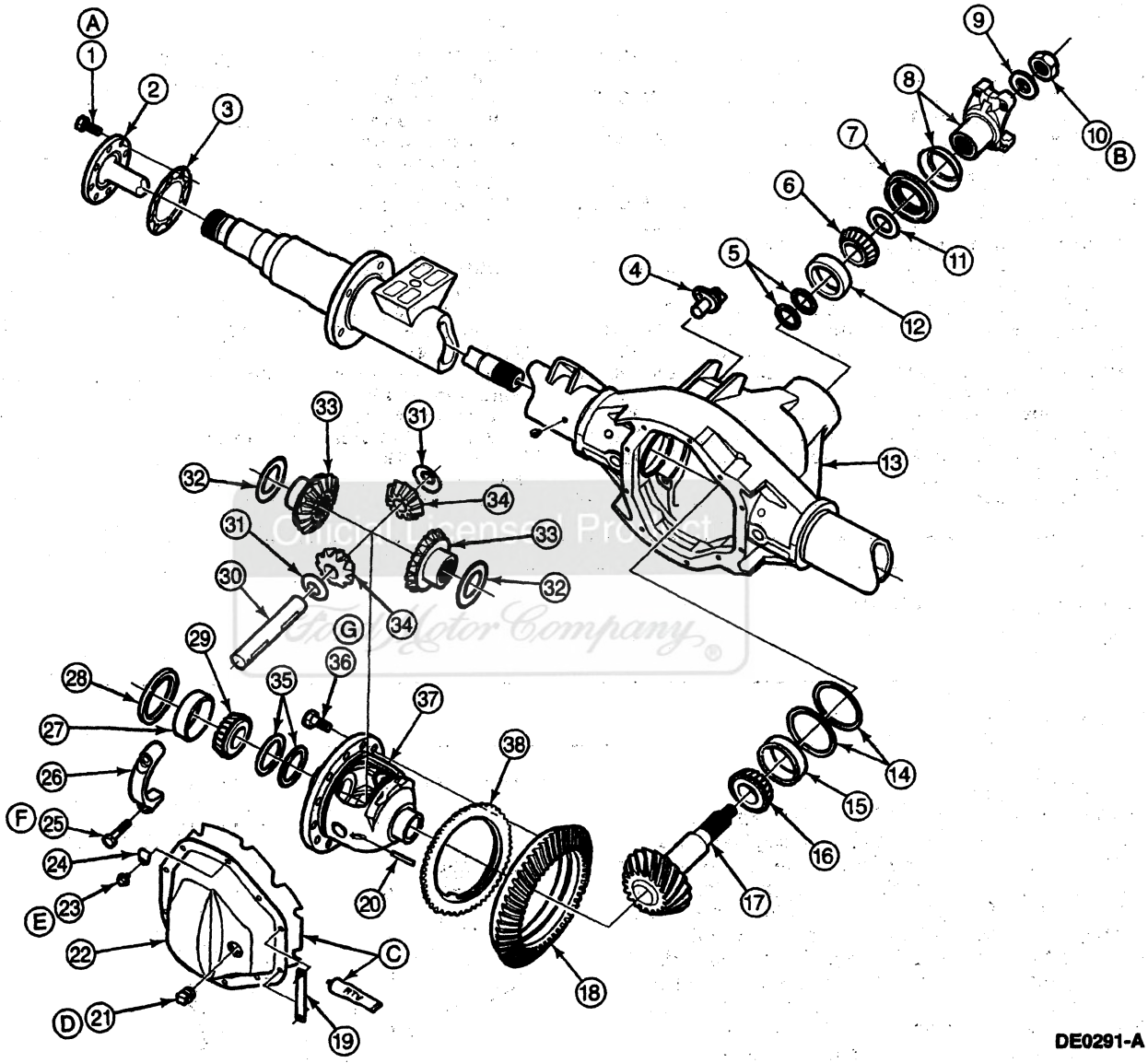

DE0291-A

Item	Part Number	Description
1	N808133	Bolt
2	4234	Axle Shaft
3	1001	Rear Wheel Gasket
4	2C190	Rear Brake Anti-Lock Sensor
5	4067	Differential Bearing Shim
6	4630	Differential Pinion Bearing, Outer
7	4676	Rear Axle Drive Pinion Seal
8	4851	Rear Axle Universal Joint Flange

(Continued)

Item	Part Number	Description
9	4239	Washer
10	354845	Lock Nut
11	4667	Thrust Washer
12	4616	Differential Drive Pinion Bearing Cup, Outer
13	4010	Rear Axle Housing
14	4109	Drive Pinion Position Shim
15	4628	Rear Axle Pinion Bearing Cup
16	4630	Differential Pinion Bearing
17	4209	Pinion (Matched Set)

(Continued)

DESCRIPTION AND OPERATION (Continued)

Item	Part Number	Description
18	4209	Ring Gear (Matched Set)
19	—	Identification Tag (Part of 4002)
20	4241	Differential Pinion Shaft Lock Pin
21	353051	Fill Plug
22	4033	Axle Housing Cover
23	4346	Screw, Cover
24	—	Brake Line Clip (Part of 4033)
25	355765-S	Bearing Cap Bolt
26	—	Bearing Cap (Part of 4010)
27	4222	Differential Bearing Cup
28	4K067	Outboard Spacer
29	4221	Differential Bearing
30	4211	Differential Pinion Shaft
31	4230	Differential Pinion Thrust Washer
32	4228	Differential Side Gear Thrust Washer
33	4236	Differential Side Gear
34	4215	Differential Pinion Gear

(Continued)

Item	Part Number	Description
35	4067	Differential Bearing Shim(Preload / Backlash)
36	4558	Rear Axle Differential Ring Gear Bolt
37	4204	Differential Case
38	4B409	Anti-Lock Speed Sensor Ring
A	—	Tighten to 113-153 N·m (83-113 Lb-Ft)
B	—	Tighten to 597-677 N·m (440-500 Lb-Ft)
C	—	Apply Silicone Rubber ETZ-19562-A or Equivalent Meeting Ford Specification ESL-M4G273 Rather Than a Gasket.
D	—	Tighten to 27-47 N·m (20-34 Lb-Ft)
E	—	Tighten to 41-54 N·m (30-40 Lb-Ft)
F	—	Tighten to 95-122 N·m (70-90 Lb-Ft)
G	—	Tighten to 272-325 N·m (200-240 Lb-Ft)

Ford Motor Company

DIAGNOSIS AND TESTING

Axle, Rear Dana

Refer to Section 05-00 and Section 00-04.

REMOVAL AND INSTALLATION

Drive Pinion Seal

SPECIAL SERVICE TOOL(S) REQUIRED

Description	Tool Number
Companion Flange Holding Tool	T57T-4851-B
Companion Flange Remover	T65L-4851-B
Impact Slide Hammer	T50T-100-A
Pinion Oil Seal Replacer	T88T-4676-A
Companion Flange Replacer	T88T-4851-B

Removal

1. NOTE: The rear axle drive pinion seal (4676) can be replaced without removing the rear axle assembly (4006) from the vehicle.

   Raise the vehicle on a hoist or raise the rear end of the vehicle with a jack. Install safety stands under the frame rails and lower the jack or hoist far enough to allow the rear axle (4001) to drop into the rebound position for working clearance.

REMOVAL AND INSTALLATION (Continued)

2. NOTE: Note and mark driveshaft / rear axle universal joint flange position so that it can be reassembled in the same position to minimize driveline vibration.

   Remove the straps and bolts which are threaded into the rear axle universal joint flange (4851). Wire the driveshaft (4602) to the frame.

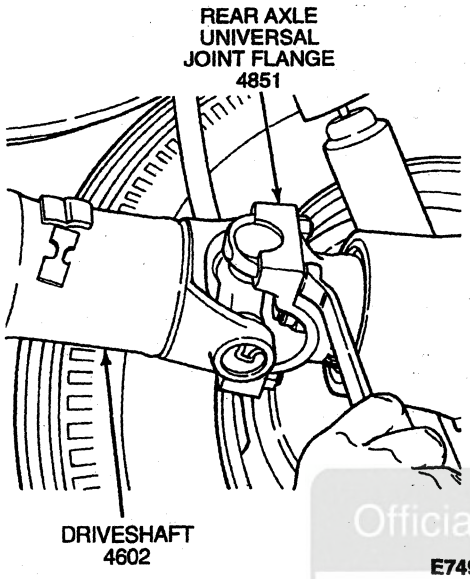

E7491-D

3. NOTE: The pinion nut requires 597-677 N·m (440-500 lb-ft) of torque to remove.

   Using Companion Flange Holding Tool T57T-4851-B to hold the companion flange, remove the differential pinion shaft nut.

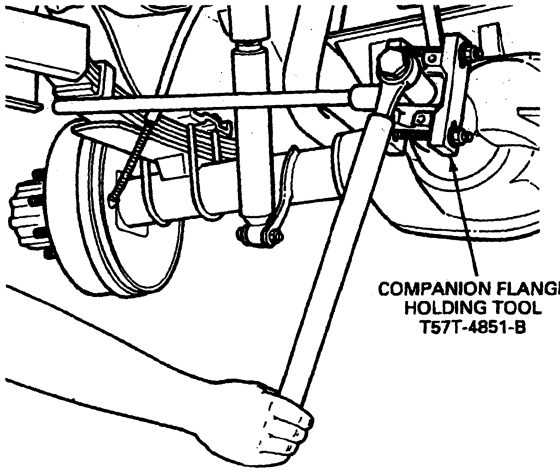

E7495-E

4. Using Companion Flange Remover T65L-4851-B or 2-Jaw Puller D80L-1002-L or equivalent, remove the rear axle universal joint flange.

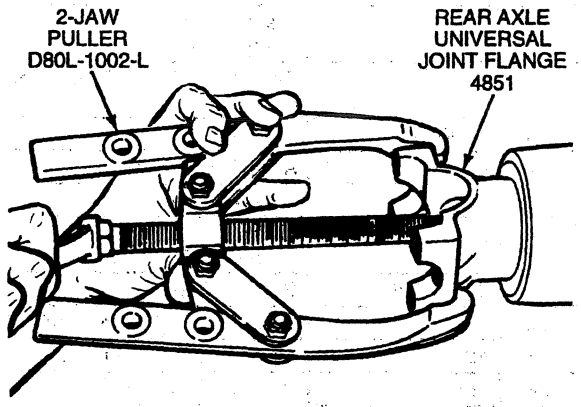

E7494-E

5. Using Seal Remover TOOL-1175-AC or equivalent in combination with Impact Slide Hammer T50T-100-A, remove the rear axle drive pinion seal.

Installation

1. **CAUTION: Installation without the proper tool can result in early seal failure. If pinion seal becomes cocked during installation, remove and install new one. Use care to make sure the garter spring remains in place during assembly. If the spring is dislodged, the rear axle drive pinion seal must be replaced.**

   Clean the rear axle drive pinion seal seat. Coat the sealing edge of the new rear axle drive pinion seal with a small amount of Hypoid Gear Lubricant C6AZ-19580-E or equivalent meeting Ford specification WSP-M2C197-A. Drive the rear axle drive pinion seal into the housing using Pinion Seal Replacer T88T-4676-A.

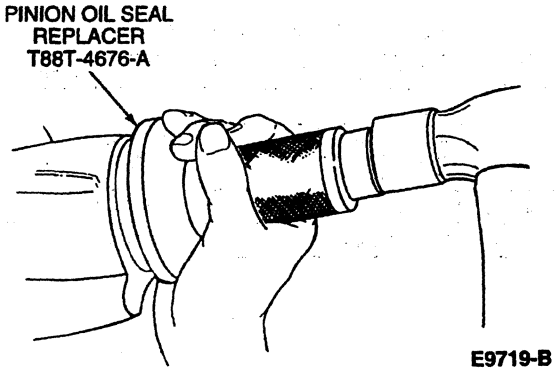

E9719-B

Official Licensed Product
Ford Motor Company

REMOVAL AND INSTALLATION (Continued)

2. NOTE: The rear axle universal joint flange must never be hammered on or installed with power tools.

   Coat the inside of the rear axle universal joint flange with a small quantity of Hypoid Gear Lubricant C6AZ-19580-E or equivalent meeting Ford specification WSP-M2C197-A and install the rear axle universal joint flange on the drive pinion shaft using Companion Flange Replacer T88T-4851-B.

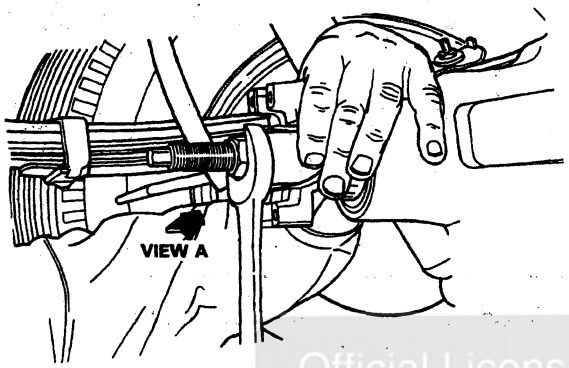

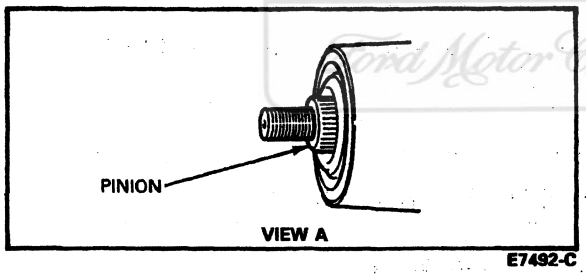

E7492-C

3. Install the pinion retaining nut on the pinion stem and tighten to 597-677 N·m (440-500 lb-ft). Hold the rear axle universal joint flange with Companion Flange Holding Tool T57T-4851-B while tightening the nut.

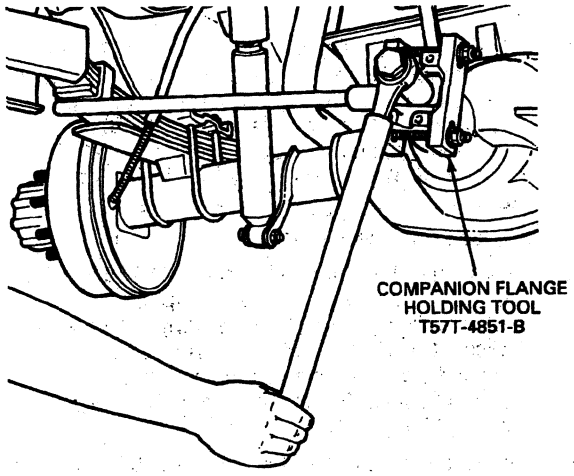

E7495-E

4. Connect the driveshaft to the rear axle universal joint flange as originally positioned. Secure with straps and bolts and tighten to specifications listed at the end of this section.

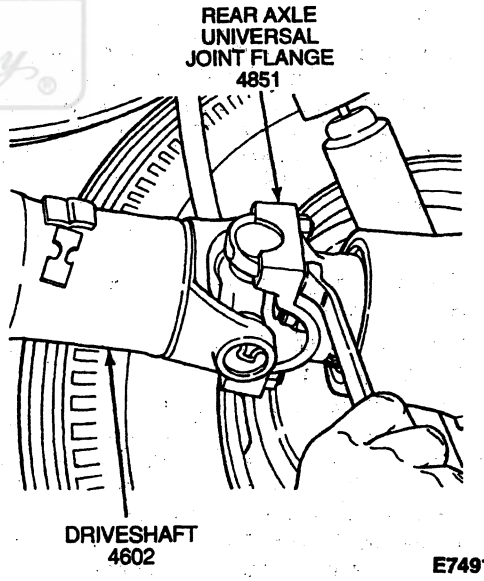

E7491-D

5. Raise the vehicle, remove the safety stands and lower the vehicle to road position. Check the level of axle lubricant and add the specified lubricant as necessary.

Official Licensed Product
Ford Motor Company

REMOVAL AND INSTALLATION (Continued)

Axle, Rear

Removal

1. NOTE: Axle shafts (4234), rear hubs (1109), rear wheel bearings and the inner wheel bearing oil seals can be replaced, lubricated or adjusted without removing the differential (4026) from the rear axle housing (4010) or the rear axle assembly (4006) from the vehicle. Refer to Section 05-02D.

   Loosen the wheel stud nuts.
2. Disconnect the shock absorbers (18080) from the rear axle (4001), and unclamp the rear stabilizer bar (5A772), if so equipped. Refer to Section 04-02. Then raise the rear end of the vehicle frame until the weight is off the rear springs (5560). Place safety stands under the frame (5005) in this position.
3. Disconnect the rear brake hose (2282) and rear axle vent hose at the frame.
4. Disconnect the driveshaft (4602) from the rear axle universal joint flange (4851). Disconnect anti-lock speed sensor connector and brake load sensor proportioning valve linkage. Refer to Section 06-06.
5. Remove the nuts from the rear spring U-bolts, and remove the rear spring caps. Refer to Section 04-02.
6. Roll the rear axle from under the vehicle, and drain the lubricant. Remove the wheels. Mount the rear axle in a work stand. To remove axle shafts, rear hubs or hub and rotor assemblies, refer to Section 05-02D. To service differential, refer to Disassembly and Assembly in this section.

Installation

1. After installing the rear wheels, roll the rear axle assembly under the vehicle.
2. Install the rear spring U-bolts and spring caps. Tighten nuts to 272-368 N·m (200-270 lb-ft).
3. Connect the shock absorbers, and install the rear stabilizer bar in position. Tighten shock absorber to 300-405 N·m (220-300 lb-ft). Tighten stabilizer bar bolts to 37-50 N·m (27-37 lb-ft).
4. Connect the driveshaft to the rear axle universal joint flange. Refer to Section 05-01 for installation instructions and torque specifications. Connect anti-lock speed sensor connector and brake load sensor proportioning valve linkage.
5. Connect the rear brake hose at the frame and bleed the brakes. The rear axle vent hose is part of the rear brake hose and uses a special "flow" bolt to secure the hose block to the rear axle. Connect hose at frame.
6. Fill the rear axle with the proper grade and specified amount of Rear Axle Lubricant C6AZ-19580-E or equivalent meeting Ford specification WSP-M2C197-A. This is a different lube than that used in Ford rear axles.
7. Remove safety stands. Lower the vehicle to the floor.

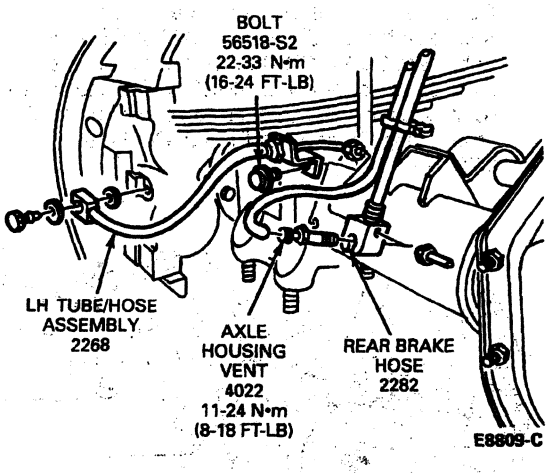

Axle Shaft, Rear, Full-Floating Axle

Refer to Section 05-02D.

Oil Seal and Wheel Bearing, Full-Floating Axle

Refer to Section 05-02D.

DISASSEMBLY AND ASSEMBLY

Axle Disassembly

SPECIAL SERVICE TOOL(S) REQUIRED

Description	Tool Number
Clutch Housing Alignment Adapter	T75L-4201-A
Companion Flange Holding Tool	T57T-4851-B
Pinion Shaft Thread Protector	T85T-4209-AH
Bearing Cup Puller	T77F-1102-A
Impact Slide Hammer	T50T-100-A
Outer Pinion Bearing Cup Remover	T88T-4628-A

Differential Case Removal

1. If necessary, due to size limitations, remove the rear axle (4001) from the vehicle. Refer to Axle, Rear, in the Removal and Installation portion of this section.
2. Remove axle housing cover plate screws and axle housing cover (4033). Tip carrier to allow lube to drain completely. Clean the cover face of the carrier, making sure it is free from any nicks. Remove old RTV gasket material.

Ford Motor Company Official Licensed Product

DISASSEMBLY AND ASSEMBLY (Continued)

3. **CAUTION: Before removing differential case (4204) and ring gear, pull axle shafts (4234) out far enough for clearance to remove differential (4026). Refer to Section 05-02D.**

   NOTE: Mating letters are stamped on rear axle bearing retaining caps and carrier. Letters are in vertical and horizontal positions. Note the positions of letters before removal. Matching letters is important at time of assembly.

   Remove rear axle bearing retaining caps.

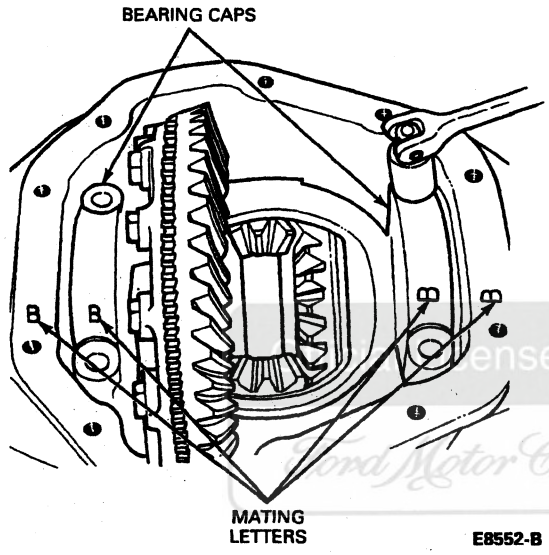

4. Place Differential Housing Spreader TOOL-4000-E or equivalent on the rear axle housing (4010). Install Dial Indicator / Magnetic Base D78P-4201-B or equivalent on the rear axle housing. Do not spread rear axle housing more than 0.38 mm (0.015 inch).

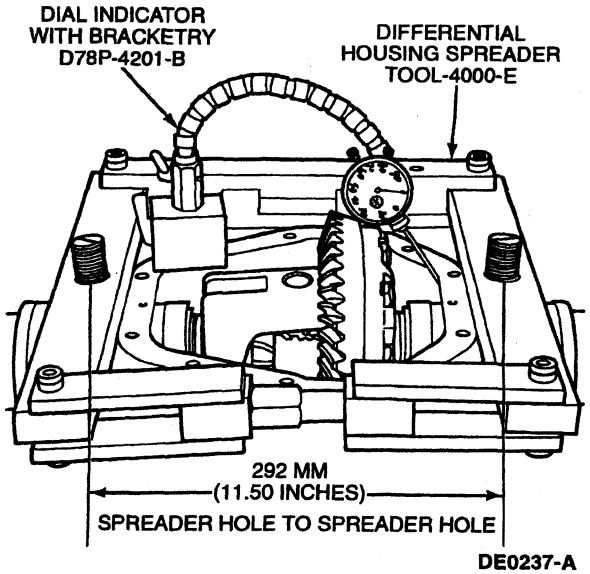

5. NOTE: Use caution to avoid damage to ring gear.

   Pry differential case from carrier with two pry bars. After differential case has been removed, remove spreader.

6. Mark or tag differential bearing cups (4222) indicating from which side they were removed.

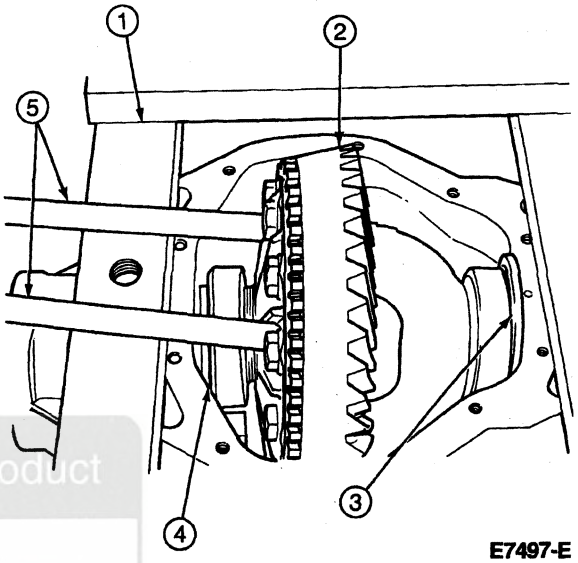

Item	Part Number	Description
1	TOOL-4000-E	Differential Housing Spreader Tool
2	—	Ring Gear (Part of 4209)
3	4K067	Spacer (RH)
4	4K067	Spacer (LH)
5	—	Pry Bars

Licensed Product Ford Motor Company

DISASSEMBLY AND ASSEMBLY (Continued)

7. The rear axle has spacers installed outboard of each differential bearing cup. Remove both spacers and tag each indicating the side each was removed from. Inspect both spacers for damage, bent or grooved conditions. Replace if required.

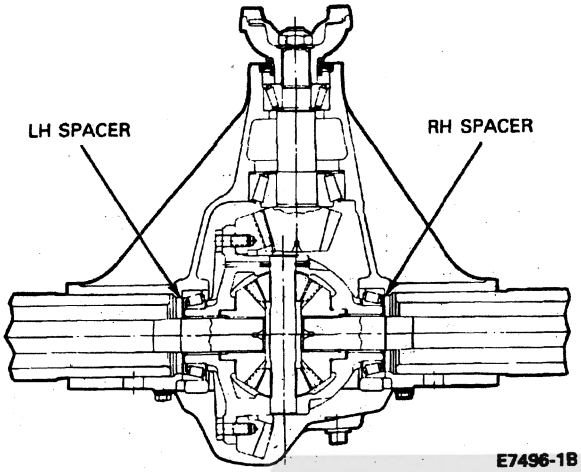

E7496-1B

Differential Case Disassembly

1. NOTE: Differential bearing shims (4067) are available in thicknesses of 0.08, 0.13, 0.25 mm and 0.76 mm (0.003, 0.005, 0.010 and 0.030 inch).

   Remove differential bearings with Pinion and Carrier Bearing Puller D81L-4220-A or equivalent. Wire differential bearing shims, differential bearing cup, bearing cone, and outboard spacer together. Identify from which side they were removed (ring gear side or opposite side). If differential bearing shims are damaged, replace with new ones.
2. Reposition differential case in puller and remove other bearing cone as described above. Replace bearings whenever removed from the carrier.

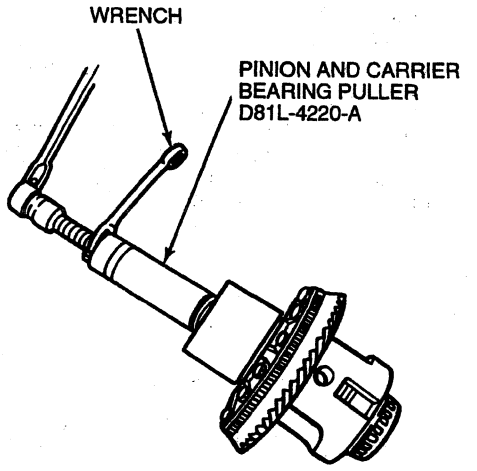

DE0404-A

3. Place a few shop towels over the vise to prevent the teeth of ring gears from being nicked. Place differential case in vise.
4. **CAUTION: Use care to not damage speed sensor ring when removing ring gear. If the speed sensor ring is removed, it must be replaced with a new one.**

   NOTE: Whenever removing the ring gear bolts, always replace with new bolts upon assembly. Use Grade 9 bolts for service replacement for all Dana rear axles.

   Remove bolts on ring gears. Leave four bolts loosely assembled 90 degrees apart.
5. Tap each bolt head alternately with a rawhide hammer to loosen the ring gear. Remove bolts and ring gear.

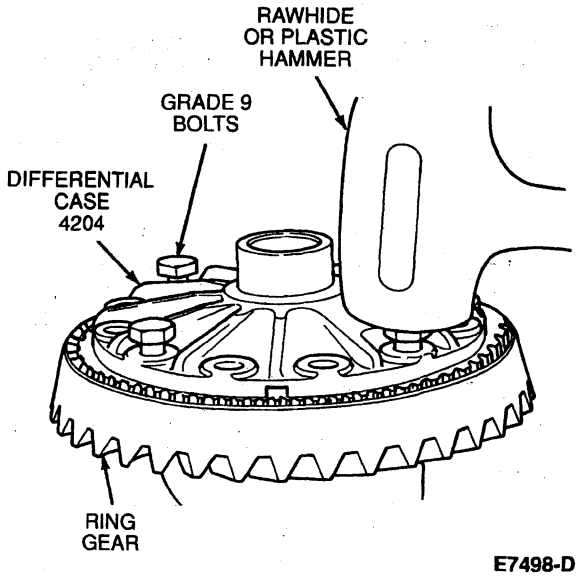

E7498-D

Official Licensed Product
Ford Motor Company

DISASSEMBLY AND ASSEMBLY (Continued)

6. If required, remove the speed sensor ring with a soft-faced hammer. Discard the speed sensor ring.

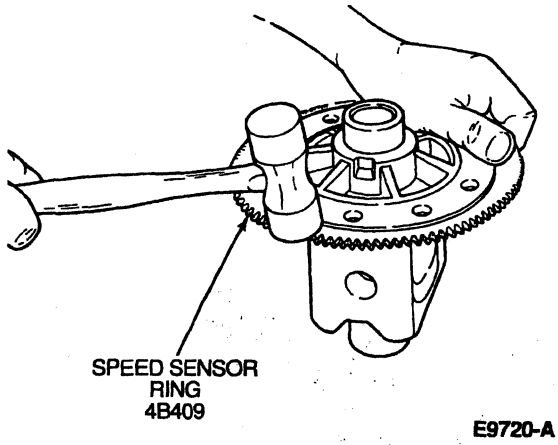

E9720-A

7. Replace differential case in vise. Use a small drift to drive out differential pinion shaft lock pin (4241) which secures the differential pinion shaft (4211).

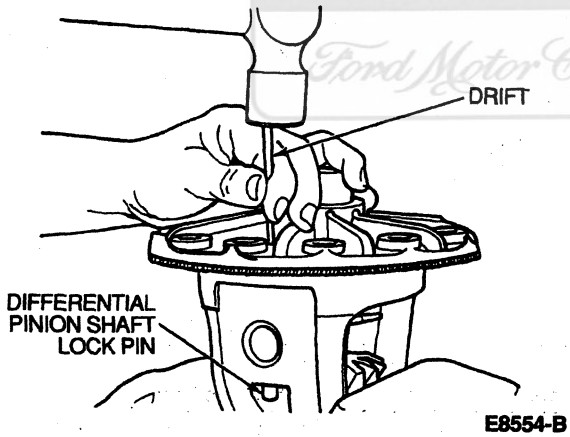

E8554-B

8. Remove differential pinion shaft with drift as shown.

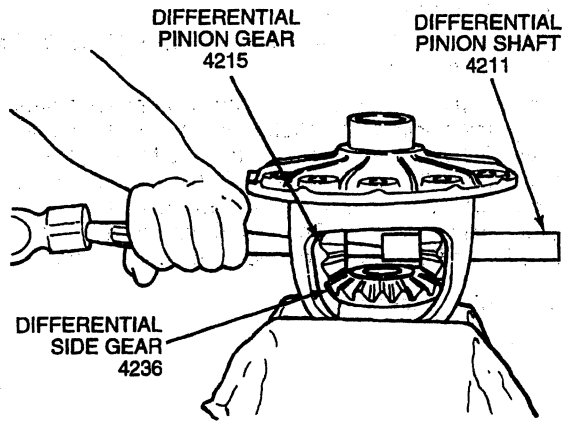

E6672-C

9. To remove differential side gears (4236) and differential pinion gears (4215), rotate the differential side gears. The differential pinion gears will turn to the opening of the differential case.
10. Remove differential pinion gears and differential pinion thrust washers (4230) behind the differential pinion gears.
11. Lift out differential side gears and differential side gear thrust washers (4228).
12. Inspect all parts, including the machined surfaces of the differential case itself. If excessive wear is visible on all parts, the complete differential should be replaced. If any one of the gears is to be replaced, replace as a set.

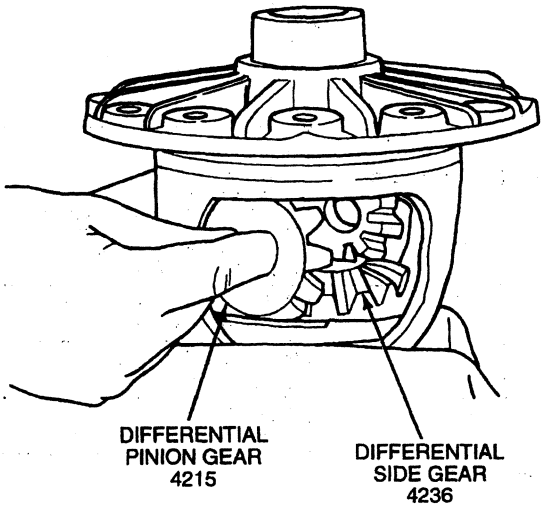

E6347-C

Official Licensed Product
Ford Motor Company

DISASSEMBLY AND ASSEMBLY (Continued)

Drive Pinion Removal

WARNING: HANDLE PINION GEAR CAREFULLY TO PREVENT INJURY.

On the spline end of the pinion, there are pinion shims. These pinion shims may stick to the pinion or bearing or even fall out. These pinion shims are to be collected and kept together for reassembly. Try not to damage pinion shims. If drive pinion shims are damaged, replace with new ones. Refer to Pinion Shims chart under Pinion Position Shim Selection in this section.

Drive Pinion Assembly

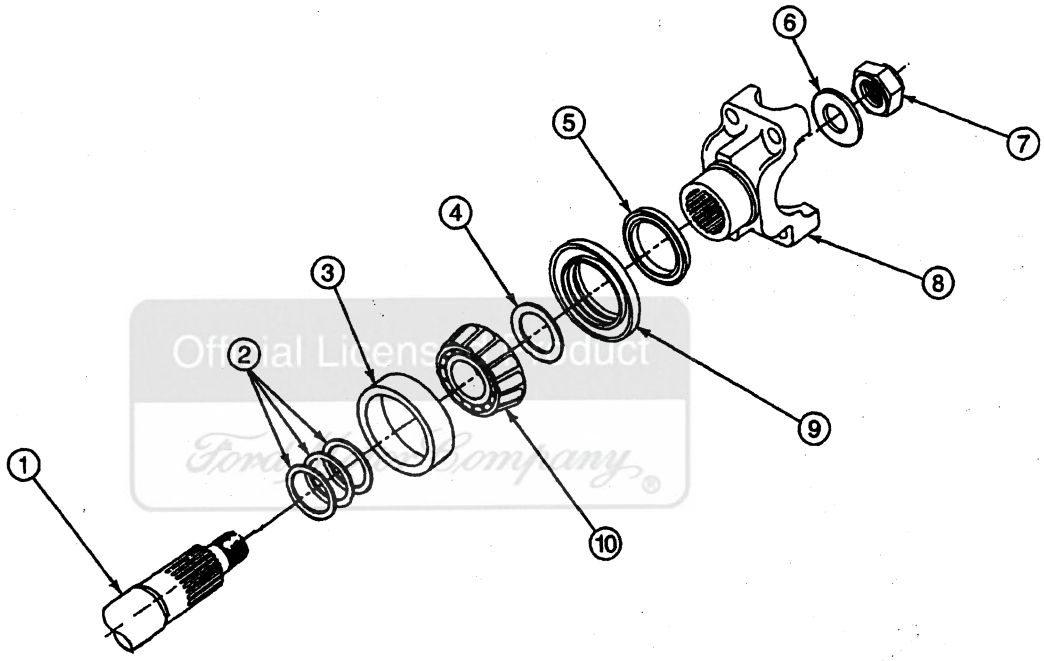

E9721-A

Item	Part Number	Description
1	—	Drive Pinion (Part of 4209)
2	4663	Drive Pinion Bearing Adjustment Shim
3	4616	Differential Drive Pinion Bearing Cup, Outer
4	4670	Rear Axle Drive Pinion Shaft Oil Slinger
5	4859	Drive Pinion Oil Seal Deflector

(Continued)

Item	Part Number	Description
6	1124	Rear Wheel Pinion Nut Locking Washer
7	390313-S100	Pinion Nut
8	4851	Rear Axle Universal Joint Flange
9	4676	Rear Axle Drive Pinion Seal
10	4630	Differential Pinion Bearing

DISASSEMBLY AND ASSEMBLY (Continued)

1 **CAUTION The pinion shim assembly sequence must be followed If sequence is not followed and components are improperly assembled, it can cause unit failure.**

NOTE Pinion nut requires 597-677 N·m (440-500 lb-ft) of torque to remove

Turn nose of carrier in a horizontal position and remove pinion nut Hold pinion flange with Companion Flange Holding Tool T57T-4851-B, and remove pinion nut and drive pinion nut locking washer

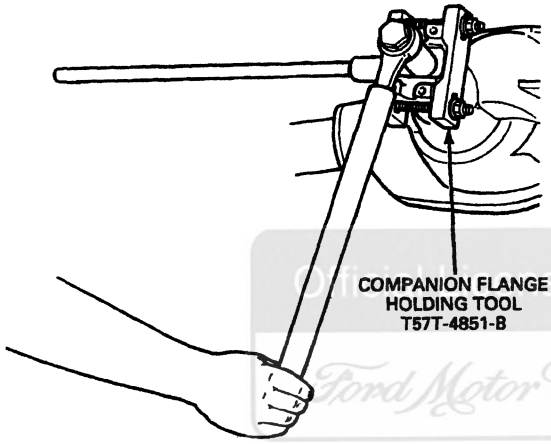

E8083-C

2 Remove rear axle universal joint flange (4851) with 2-Jaw Puller Tool D80L-1002-L or equivalent Replace pinion seal if rear axle universal joint flange shows signs of wear

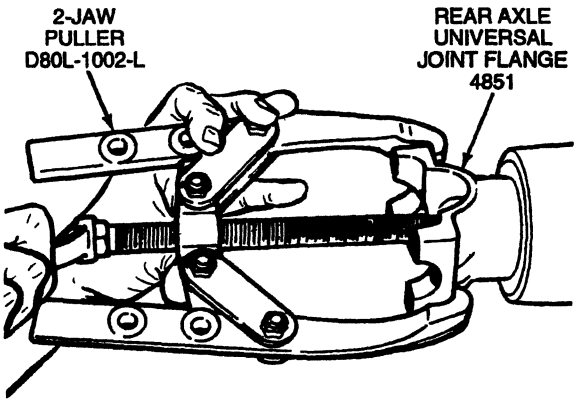

E7494-E

3 Remove pinion by tapping with a rawhide hammer and Pinion Shaft Thread Protector T85T-4209-AH Catch the pinion with your hand to prevent it from falling and being damaged

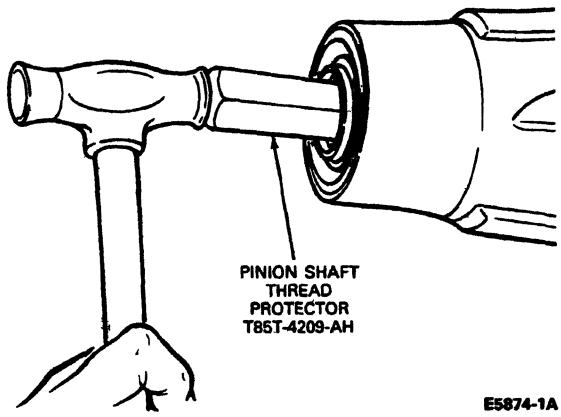

E5874-1A

Pinion Bearing Cup Removal

1 Pull out rear axle drive pinion seal (4676) with Bearing Cup Puller (Oil Seal Replacer) T77F-1102-A and Impact Slide Hammer T50T-100-A Discard rear axle drive pinion seal Replace with new one at time of assembly Remove differential pinion bearing (4630) and drive pinion shaft bearing thrust washer

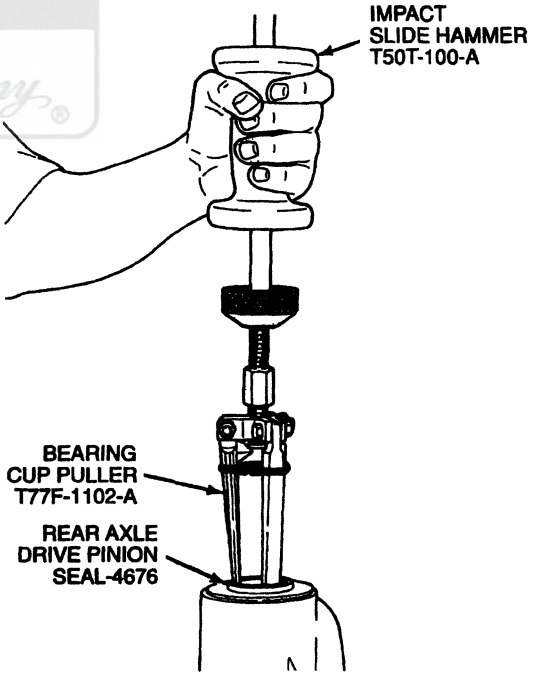

E4834-E

Official Licensed Product
Ford Motor Company

DISASSEMBLY AND ASSEMBLY (Continued)

2. **CAUTION: Do not nick bore of carrier.**

   NOTE: The front and rear section of carrier may vary in pinion bore depth due to the need for either a baffle or oil slinger or both. The baffle serves the same purpose as a dam, to maintain pinion bearings with lubricant. The oil slinger serves the purpose of assisting the lube to flow up through the oil channels to lubricate the pinion bearings. If used, they are part of the pinion setting adjustment.

   Turn nose of carrier down. Remove outer differential bearing cup with Driver Handle D81L-4000-A or equivalent and the Outer Pinion Bearing Cup Remover T88T-4628-A as shown in the following illustration.

3. NOTE: Drive pinion bearing adjustment shims (4663) are located between the differential drive pinion bearing cup (4616) and bore of carrier and might also include an oil baffle. If pinion shims and baffles are bent or nicked, replace at time of assembly. Wire pinion shims might stack together; if so, measure stacks. If stack has to be replaced, replace with pinion shim of same thickness.

   Remove the inner differential bearing cup with Driver Handle D81L-4000-A or equivalent and Pinion Bearing Cup Replacer D81T-4616-A or equivalent.

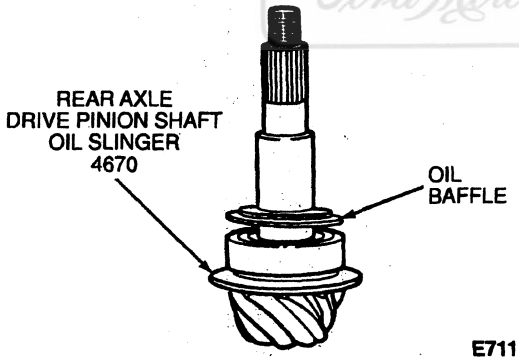

E7115-C

Bearing Cup Removal

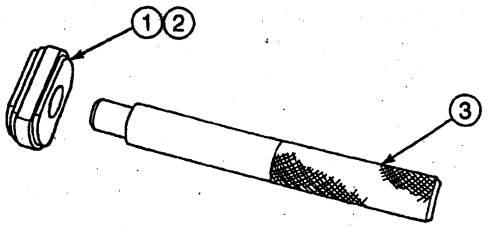

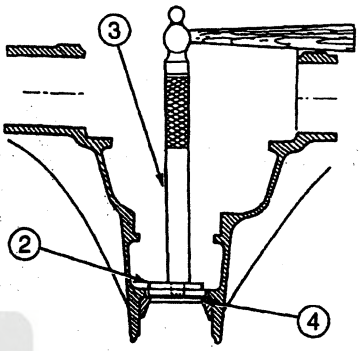

OUTER CUP REMOVAL

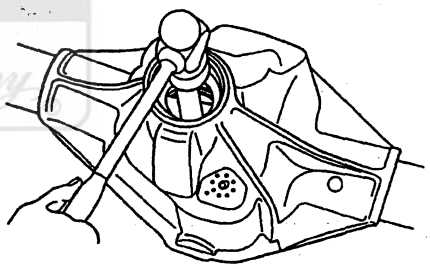

INNER CUP REMOVAL

E9722-A

Item	Part Number	Description
1	D81T-4616-A	Pinion Bearing Cup Replacer (Inner)
2	T88T-4628-A	Outer Pinion Bearing Cup Remover
3	D81L-4000-A	Driver Handle
4	4616	Differential Drive Pinion Bearing Cup

Licensed Product
Ford Motor Company

DISASSEMBLY AND ASSEMBLY (Continued)

4 NOTE Both baffle and rear axle drive pinion shaft oil slinger (4670) are part of the pinion shims and are to be kept intact for assembly

Remove differential pinion bearing from pinion with Pinion and Carrier Bearing Puller D81L-4220-A or equivalent

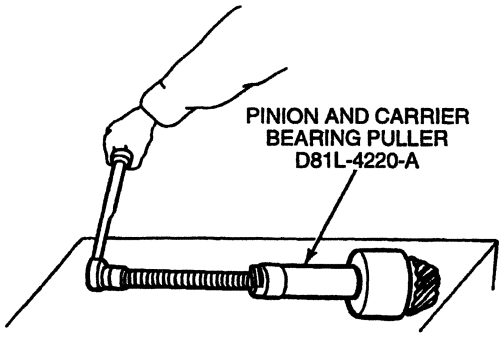

DE0403-A

Axle Assembly

Differential Case Assembly

1 Place differential case (4204) in vise Apply Premium Long-Life Grease XG-1-C or -K or equivalent meeting Ford specification ESA-M1C75-B to new differential side gear thrust washers (4228) and to rear hubs (1109) and thrust face of the new differential side gears (4236)

2 Install both differential side gears Apply grease to the new differential pinion thrust washers (4230) and the new differential pinion gears (4215)

3 NOTE An easy way to assemble the differential side gears and differential pinion gears is to have all parts lubricated with Rear Axle Lubricant C6AZ-19580-E meeting Ford specification WSP-M2C197-A before assembly

Assemble both differential side gears and differential side gear thrust washers, hold in place with hand, then assemble the differential pinion gears and differential pinion thrust washers to hold the differential side gears in place

4 Rotate the differential side gears until the holes of the washers and differential pinion gears line up with the holes of the differential case If the differential pinion gears cannot be rotated by hand, install one of the axle shafts (4234) into the spline of differential side gear and use a pipe wrench to turn the axle shaft

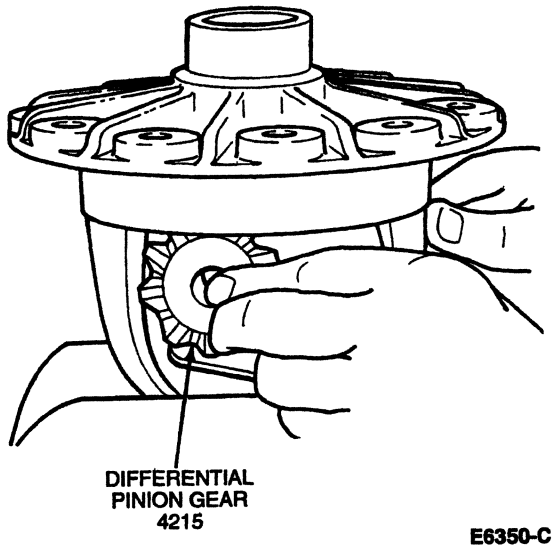

E6350-C

5 Use a drift to line up the holes with those of the differential case

6 Assemble drive pinion shaft and drive on differential pinion shaft (4211) to remove drift Align differential pinion shaft lock pin hole of the differential pinion shaft with the differential pinion shaft lock pin hole of the differential case

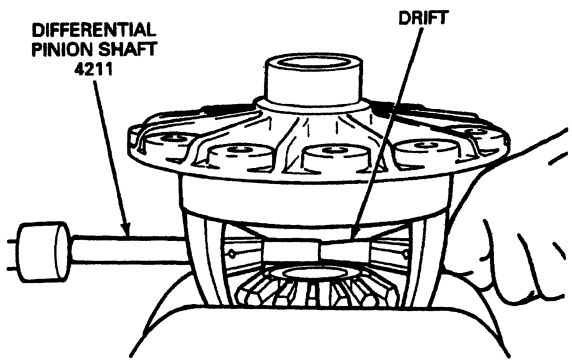

E6401-B

Official Licensed Product
Ford Motor Company

DISASSEMBLY AND ASSEMBLY (Continued)

7. Assemble differential pinion shaft lock pin (4241). Peen metal of differential case over pin in two places 180 degrees apart to lock in place. Note the location of the slot in the differential pinion shaft lock pin and peen 90 degrees away.

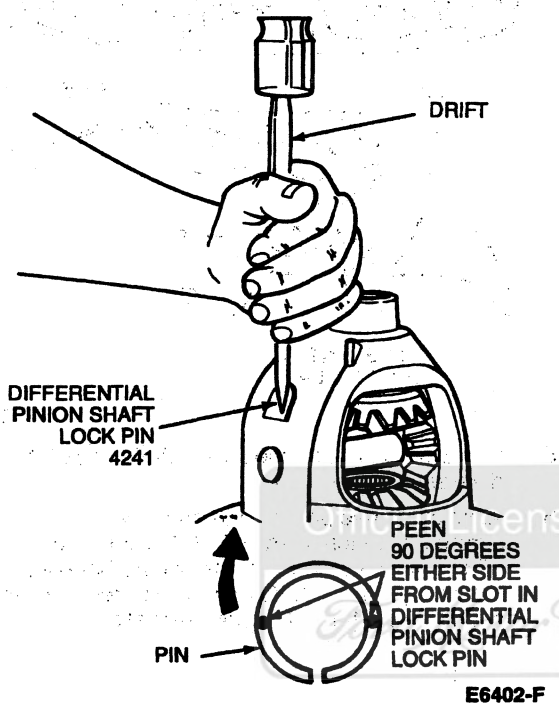

E6402-F

8. **CAUTION: Tab on speed sensor ring must be aligned with slot in differential case.**

   Align tab in speed sensor ring with slot in differential case. Start two ring gear bolts through the differential case into the ring gear to make sure differential case and ring gear bolt hole align.

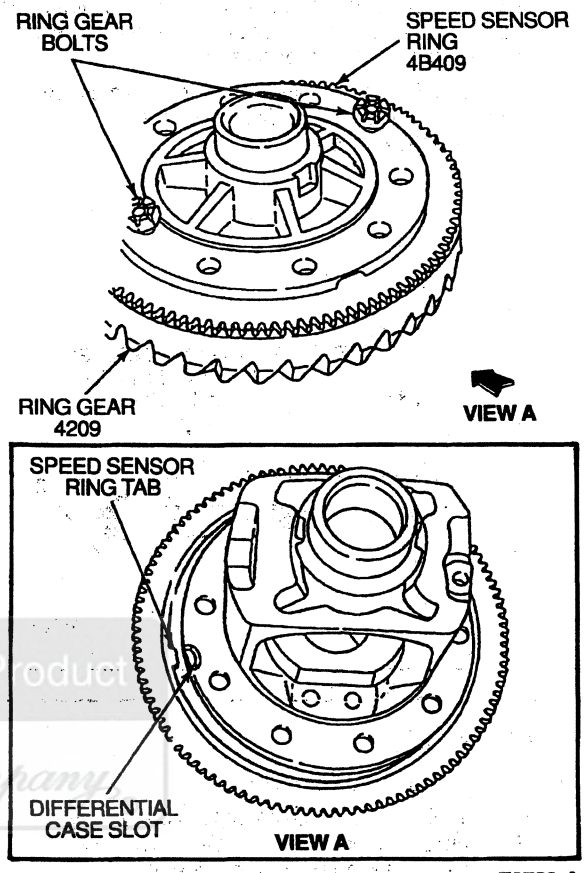

E9723-A

9. Press the speed sensor ring on the differential case. The differential case flange acts as a pilot for the speed sensor ring. Apply Threadlock and Sealer EOAZ-19554-AA or equivalent meeting Ford specification WSK-M2G315-A5 (TYPE II) to new ring gear bolts.

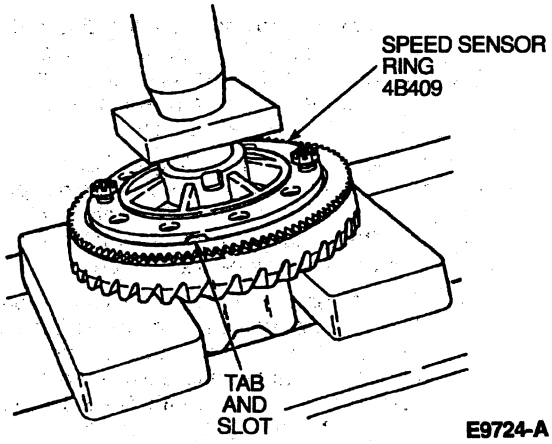

E9724-A

10. Draw up ring gear bolts alternately and evenly. Tighten ring gear bolts to 272-325 N·m (200-240 lb-ft).

Unlicensed Product

DISASSEMBLY AND ASSEMBLY (Continued)

Differential Case End Play Check

1. Install Master Bearings Set D81T-4222-E or equivalent to differential case.
2. Remove all nicks, burrs, dirt, etc., from differential case bearing hubs and rear axle differential carrier (4141) to allow bearings to rotate freely.
3. Install outboard differential spacers into rear axle differential carrier. Assemble differential case into carrier (less pinion).
4. NOTE: Dial indicator should have a minimum travel capability of 5.08 mm (0.200 inch).

   Mount Dial Indicator / Magnetic Base D78P-4201-B with Clutch Housing Alignment Adapter T75L-4201-A or equivalents as shown. Locate tip of indicator on flat surface of one of the ring gear screw spot faces.
5. NOTE: Repeat the following steps until you have obtained the same reading. Record the reading of the indicator. This will be the total amount of differential bearing shims (4067) required (less preload) and will be calculated later during assembly.

   Force differential (4026) as far as possible in the direction toward the indicator. With force still applied, set indicator at zero (0).

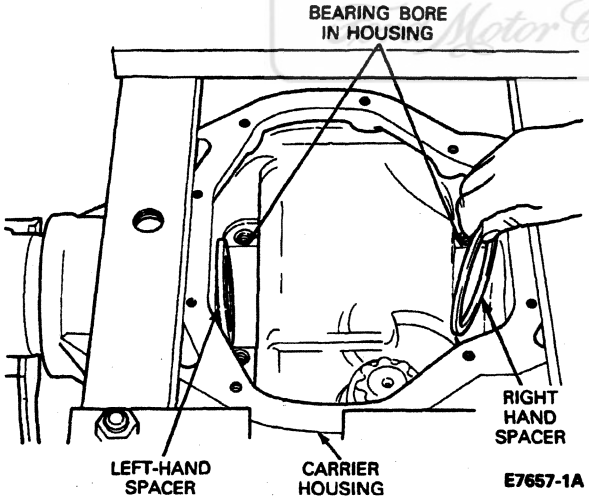

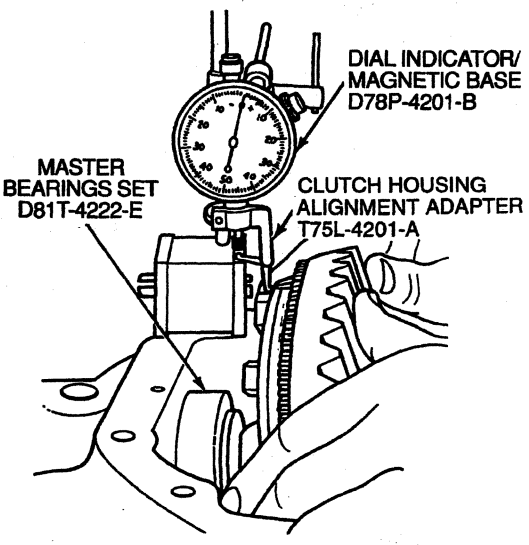

6. Force the differential as far as it will go in the opposite direction.
7. After making sure the readings are correct, remove indicator and differential from rear axle housing (4010). Do not remove master bearings from differential case at this time.

   This reading is the Total Differential Case End Play which will be needed for Assembly of Differential into Housing in this section.

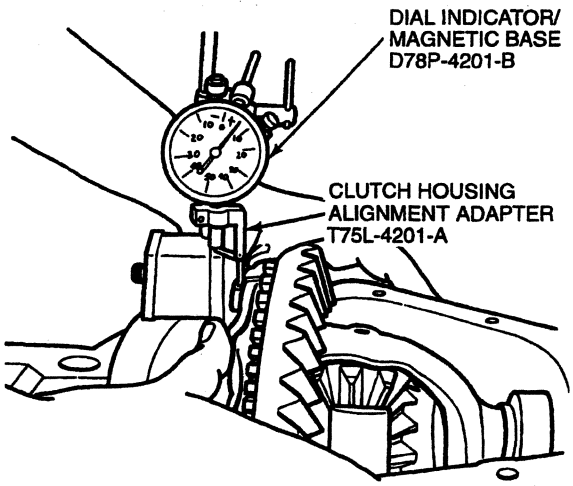

DISASSEMBLY AND ASSEMBLY (Continued)

Pinion Ring Gear Variation Number

NOTE If baffle or rear axle drive pinion shaft oil slinger (4670) is bent or mutilated, it should be replaced

Ring gears and pinions are supplied in matched sets only Matching numbers on both the pinion and ring gear are etched for verification If a new ring gear and pinion is being used, verify the numbers of each pinion and ring gear before proceeding with assembly The end of the pinion with the etched figures shown is known as the button end

Use the gear contact pattern method to make sure the final pinion position is valid

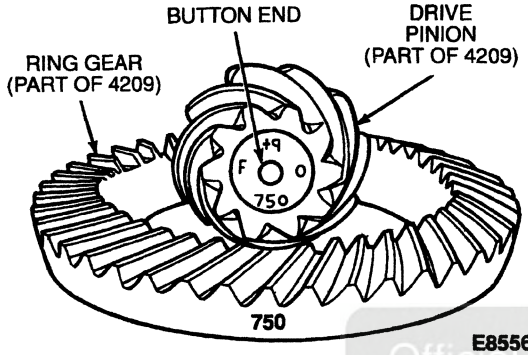

E8556-D

On the button end of each pinion, there is etched a plus (+) number, a minus (-) number, or a zero (0) number which indicates the best running position for each particular ring gear This dimension is controlled by the shimming behind the inner pinion bearing cup (the backface)

The distance from the centerline of the ring gear to the backface of the pinion is 147 6 mm (5 812 inches)

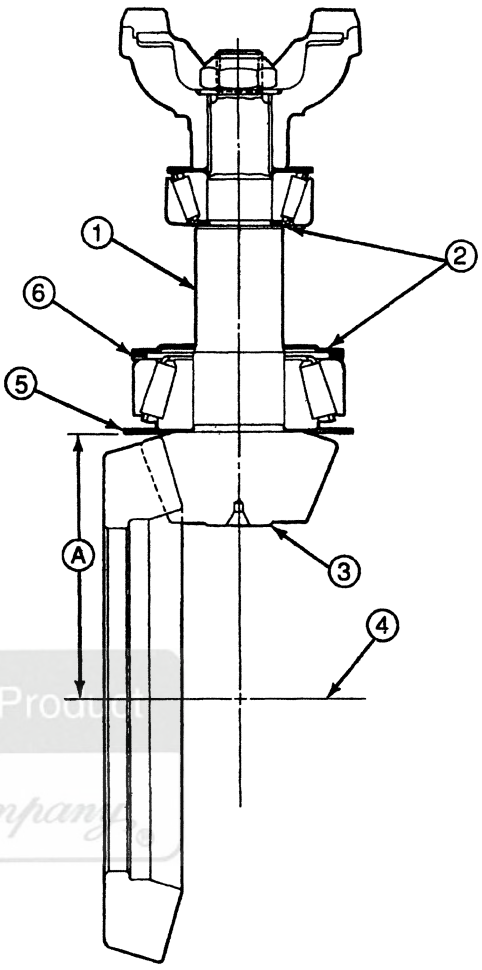

E9726-B

Item	Part Number	Description
1	—	Tooth Combination Stamped Here
2	4663	Drive Pinion Bearing Adjustment Shims
3	—	Button End (Part of 4209)
4	—	Centerline of Differential Ring Gear and Pinion
5	4670	Rear Axle Drive Pinion Shaft Oil Slinger
6	—	Pinion Oil Baffle
A	—	147 6 mm (5 812 Inches)

Official Licensed Product Ford Motor Company

DISASSEMBLY AND ASSEMBLY (Continued)

For example, if a pinion is etched m+8 (+3), this pinion would require 0.08 mm (0.003 inch) less drive pinion shims than a pinion etched "0." This means by removing drive pinion shims, the mounting distance of the pinion is increased, which is just what an m+8 (+3) indicates. Or if a pinion is etched m-8 (-3), we would add 0.08 mm (0.003 inch) more shims than would be required if the pinion were etched "0." By adding 0.08 mm (0.003 inch) pinion shims, the mounting distance of the pinion was decreased, which is just what an m-8 (-3) indicated.

If the old ring gear and pinion is to be reused, measure the old pinion shims and build a new pack of pinion shims to this same dimension. If a baffle is used in the rear axle assembly (4006), it is considered part of the shim pack.

To change the pinion adjustment, pinion shims are available in thicknesses of 0.08, 0.13 and 0.25 mm (0.003, 0.005 and 0.010 inch).

1. Measure each shim separately with a micrometer and add together to get the total shim pack thickness from the original buildup.

   If a new ring gear and pinion is being used, notice the (+) or (-) etching on both the old and new pinion and adjust the thickness of the new shim pack to compensate for the difference of these two figures.

   For example, if the old pinion reads m+5 (+2) and the new is m-5 (-2), add 0.10 mm (0.004 inch) pinion shims to the original shim pack.

Old Pinion Marking	New Pinion Marking (English)								
	-4	-3	-2	-1	0	+1	+2	+3	+4
+4	+0.008	+0.007	+0.006	+0.005	+0.004	+0.003	+0.002	+0.001	0
+3	+0.007	+0.006	+0.005	+0.004	+0.003	+0.002	+0.001	0	-0.001
+2	+0.006	+0.005	+0.004	+0.003	+0.002	+0.001	0	-0.001	-0.002
+1	+0.005	+0.004	+0.003	+0.002	+0.001	0	-0.001	-0.002	-0.003
0	+0.004	+0.003	+0.002	+0.001	0	-0.001	-0.002	-0.003	-0.004
-1	+0.003	+0.002	+0.001	0	-0.001	-0.002	-0.003	-0.004	-0.005
-2	+0.002	+0.001	0	-0.001	-0.002	-0.003	-0.004	-0.005	-0.006
-3	+0.001	0	-0.001	-0.002	-0.003	-0.004	-0.005	-0.006	-0.007
-4	0	-0.001	-0.002	-0.003	-0.004	-0.005	-0.006	-0.007	-0.008

Old Pinion Marking	New Pinion Marking (Metric)								
	-10	-8	-5	-3	0	+3	+5	+8	+10
+10	+.20	+.18	+.15	+.13	+.10	+.08	+.05	+.03	0
+8	+.18	+.15	+.13	+.10	+.08	+.05	+.03	0	-.03
+5	+.15	+.13	+.10	+.08	+.05	+.03	0	-.03	-.05
+3	+.13	+.10	+.08	+.05	+.03	0	-.03	-.05	-.08
0	+.10	+.08	+.05	+.03	0	-.03	-.05	-.08	-.10
-3	+.08	+.05	+.03	0	-.03	-.05	-.08	-.10	-.13
-5	+.05	+.03	0	-.03	-.05	-.08	-.10	-.13	-.15
-8	+.03	0	-.03	-.05	-.08	-.10	-.13	-.15	-.18
-10	0	-.03	-.05	-.08	-.10	-.13	-.15	-.18	-.20

Pinion Bearing Cup Installation

SPECIAL SERVICE TOOL(S) REQUIRED

Description	Tool Number
Pinion Bearing Cup Replacer	T67P-4616-A
Threaded Drawbar	T75T-1176-A
Driver Handle	T88T-4020-B
Pinion Depth Gauge	T79P-4020-A
Gauge Disc	T88T-4020-A

(Continued)

SPECIAL SERVICE TOOL(S) REQUIRED (Cont'd)

Description	Tool Number
Axle Bearing/Seal Plate	T75L-1165-B
Companion Flange Holding Tool	T57T-4851-B
Companion Flange Remover	T65L-4851-B
Pinion Oil Seal Replacer	T88T-4676-A
Companion Flange Replacer	T88T-4851-A

1. Place the inner and outer differential bearing cups into the carrier bore.

DISASSEMBLY AND ASSEMBLY (Continued)

2. Place the inner bearing cup replacer tool on the inner differential drive pinion bearing cup (4616). Use Pinion Bearing Cup Replacer D81T-4616-A or equivalent.
3. Place the outer bearing cup replacer tool on the outer differential drive pinion bearing cup. Use Pinion Bearing Cup Replacer T67P-4616-A.
4. Install the Threaded Drawbar T75T-1176-A into the replacer tools and tighten the drawbar to install the differential drive pinion bearing cups into the carrier bore.

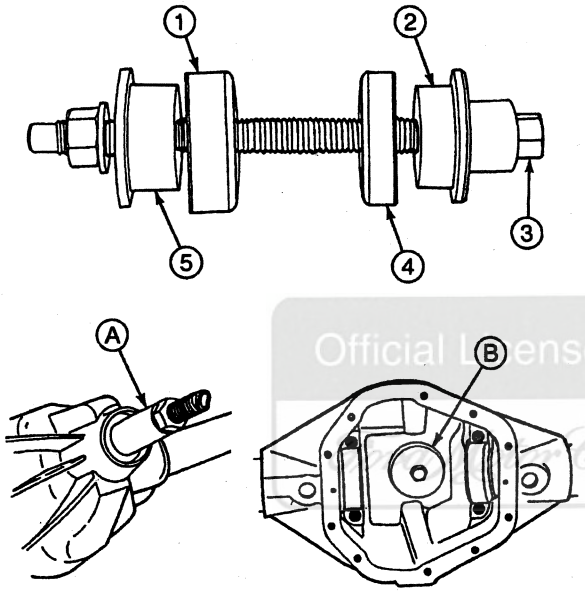

E1706-K

Item	Part Number	Description
1	4616	Differential Drive Pinion Bearing Cup (Inner)
2	T67P-4616-A	Pinion Bearing Cup Replacer
3	T75T-1176-A	Threaded Drawbar
4	4616	Differential Drive Pinion Bearing Cup (Outer)
5	D81T-4616-A	Pinion Bearing Cup Replacer
A	—	Outer Cup Installation View
B	—	Inner Cup Installation View

Pinion Position Shim Selection

1. NOTE: If any of the gauge surfaces become nicked, the high spots must be removed with a medium India oilstone to make sure there are no erroneous readings.

   Place a new inner drive pinion bearing cone over the proper aligning adapter and insert into the axle carrier bore.
2. The 3/8-inch square drive in the handle to be used for obtaining the proper pinion bearing preload and tighten to preload of 2.26-4.53 N·m (20-40 lb-in).
3. Place the outer drive pinion bearing cone (new or used if in good condition) into the differential drive pinion bearing cup and assemble the handle onto the screw and hand tighten.

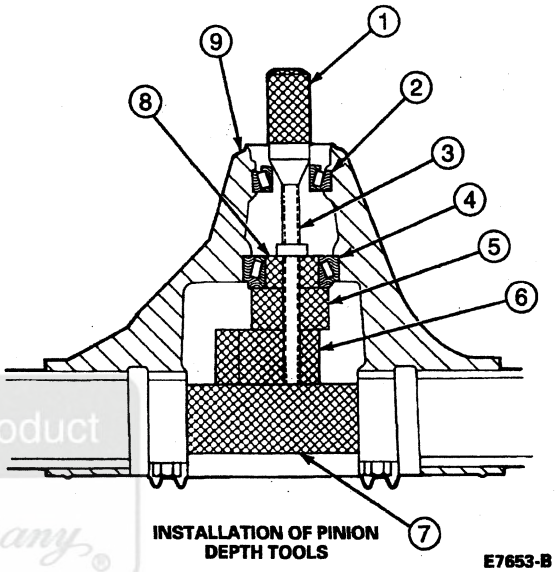

INSTALLATION OF PINION DEPTH TOOLS

E7653-B

Item	Part Number	Description
1	T88T-4020-B	Handle
2	4630	Differential Pinion Bearing
3	T80T-4020-F43	Screw (Part of T79P-4020-A)
4	4621	Differential Pinion Bearing
5	T88T-4020-A	Gauge Disc
6	T80T-4020-F42	Gauge Block (Part of T79P-4020-A)
7	D81T-4020-F51	Gauge Tube
8	D80T-4020-R60	Aligning Adapter
9	4010	Rear Axle Housing

4. Center the proper gauge tube into the differential bearing bore. Install the bearing caps and tighten to 95-122 N·m (70-90 lb-ft).
5. Make sure the shims or feeler gauges are free of dirt to prevent an incorrect reading.
6. NOTE: The feeler gauge fit between the gauge tube and the gauge block should have a slight drag-type feeling.

   Using a feeler gauge tool or shims, select the thickest feeler shim that will enter between the gauge tube and the gauge block. Insert the feeler gauge directly along the gauge block so a correct reading can be made.

Official Licensed Product

DISASSEMBLY AND ASSEMBLY (Continued)

7 NOTE If the service pinion gear is marked with a plus (+) reading, this amount must be subtracted from the thickness dimension obtained between gauge block and gauge tube

NOTE If the service pinion gear is marked with a minus (-) reading, this amount must be added to the thickness dimension obtained between gauge block and gauge tube

NOTE In addition you must use the exact same new inner pinion bearing used in the previous steps

After the correct feeler gauge feel is obtained, check the reading This is the thickness of pinion shims required providing that, upon inspection of the service pinion gear, there are no markings

8 **CAUTION The drive pinion preload spacer and pinion shim assembly sequence must be followed If sequence is not followed and components are improperly assembled, it can cause unit failure. If pinion shims are damaged, replace with new ones. Shims are available in the thicknesses shown in the chart below.**

NOTE If a baffle or rear axle drive pinion shaft oil slinger is used, replace with a new one upon assembly and measure as part of the shim stack

Remove the inner differential drive pinion bearing cup and install the correct thickness of pinion shims in the carrier bore Reinstall the differential drive pinion bearing cup and baffle (if used) Install rear axle drive pinion shaft oil slinger if a rear axle drive pinion shaft oil slinger is used, between the pinion gear head and inner pinion bearing cone Assemble onto the pinion shaft and press on the cone with Axle Bearing / Seal Plate T75L-1165-B and a suitable plate which contacts the bearing cone

PINION SHIMS

mm	Inches
0 36	0 014
0 38	0 015
0 41	0 016

(Continued)

PINION SHIMS (Cont'd)

mm	Inches
0 46	0 018
0 51	0 020
0 53	0 021
0 56	0 022
0 58	0 023
0 76	0 030

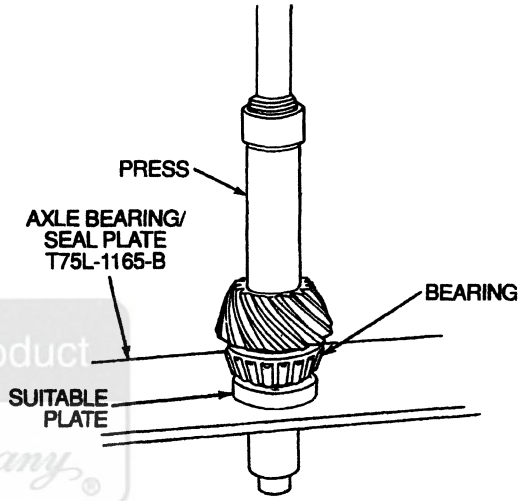

E9727-A

9 After following these procedures, continue to build the remaining components with proper pinion and differential bearing preload torques and differential ring gear and pinion backlash

10 Assemble pinion shims onto pinion and install pinion gear into rear axle housing Assemble outer bearing cone and roller assembly onto pinion

11 Assemble rear axle universal joint flange (4851), washer and new pinion nut on the pinion shaft Tighten nut to 597-677 N·m (440-500 lb-ft)

DISASSEMBLY AND ASSEMBLY (Continued)

12. Using a pound-inch torque wrench, rotate pinion. Torque to rotate pinion should read 2.26-4.53 N·m (20-40 lb-in). To increase preload, remove pinion shims from the outer shim pack. To decrease preload, add shims.

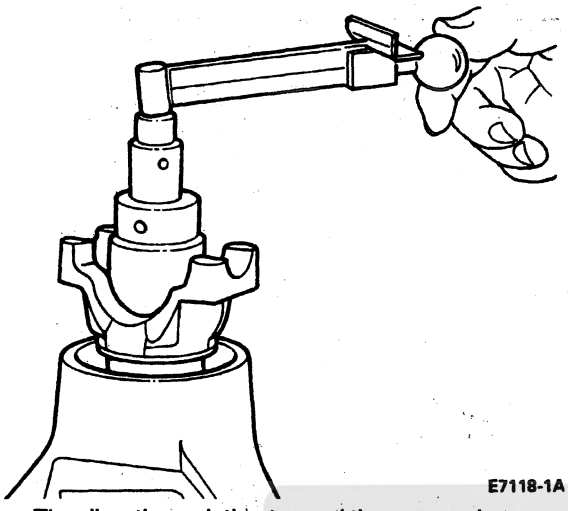

E7118-1A

The direction pointing toward the companion flange indicates that by removing shims, the distance from the centerline of the tubes to pinion backface is increased, giving a plus (+) reading. The differential pinion bearing preload shim pack does not affect the pinion depth setting. However, if pinion position is changed, the pinion preload will change and may require adjustment to bring torque-to-rotation within specification. Arrows on the ring gear illustrate the method to increase or decrease backlash and differential bearing preload.

If pinion bearing preload is within specification and the pinion position is changed, the drive pinion bearing adjustment shims (4663) should be changed by the same amount.

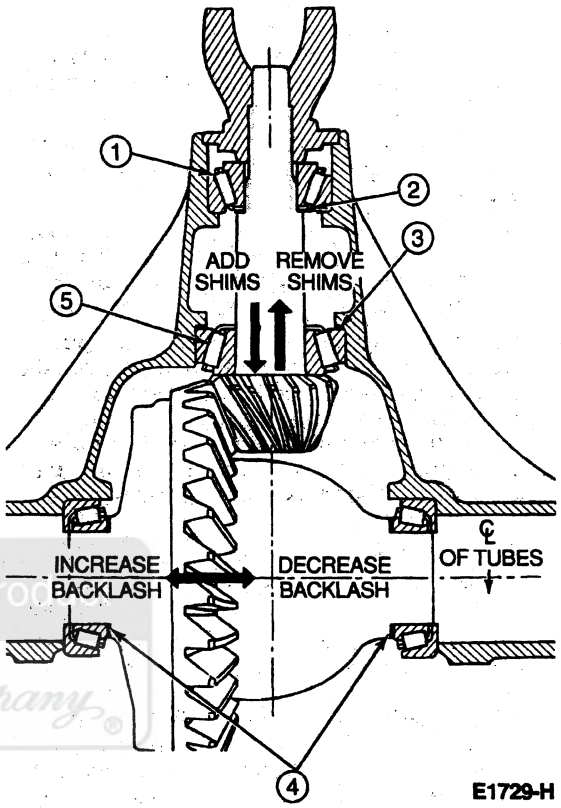

E1729-H

Item	Part Number	Description
1	4630	Differential Pinion Bearing, Outer
2	4663	Outer Drive Pinion Bearing Adjustment Shims (Preload)
3	4663	Inner Drive Pinion Bearing Adjustment Shims (Position)
4	4067	Differential Bearing Shims
5	4621	Differential Pinion Bearing, Inner

13. With the drive pinion at the correct preload as determined earlier in this procedure, remove the pinion nut, drive pinion nut locking washer with Companion Flange Holding Tool T57T-4851-B and Companion Flange Remover T65L-4851-B.

DISASSEMBLY AND ASSEMBLY (Continued)

14. Coat the rear axle drive pinion seal (4676) with grease. Install the pinion seal with Pinion Oil Seal Replacer T88T-4676-A. After installation, make sure the garter spring did not pop out. If the garter spring pops out, remove and replace rear axle drive pinion seal.

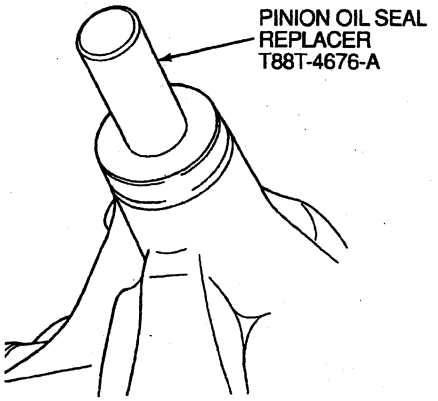

E9728-A

15. Install the rear axle universal joint flange using Companion Flange Replacer T88T-4851-A.
16. NOTE: Whenever the rear axle universal joint flange is removed, the pinion washer and pinion nut should be replaced.

    Install the washer and nut and tighten nut to 597-677 N·m (440-500 lb-ft).

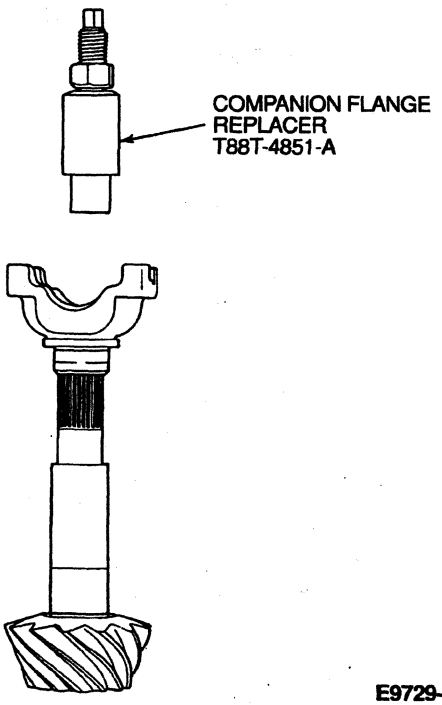

E9729-A

Assembly of Differential into Housing

SPECIAL SERVICE TOOL(S) REQUIRED

Description	Tool Number
Clutch Housing Alignment Adapter	T75L-4201-A

Ring Gear and Pinion Backlash

Before installing differential to housing, refer to Ring Gear and Pinion Backlash in the Adjustments portion of this section.

1. NOTE: Care should be taken to avoid nicking the teeth of the ring gear and speed sensor ring during assembly.

   Assemble differential drive pinion bearing cups (4616) to differential bearings (4221). Install differential (4026) into carrier.
2. Use a rawhide hammer to seat differential into crossbore of carrier.
3. Remove the spreader from the carrier.

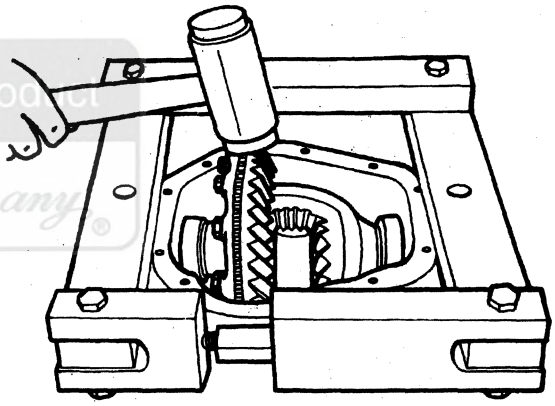

E6409-1B

Licensed Product Ford Motor Company

DISASSEMBLY AND ASSEMBLY (Continued)

4. NOTE: Mating letters are stamped on rear axle bearing retaining caps and carrier. Matching letters is important at time of assembly. Letters are in vertical and horizontal positions.

   Install differential bearing retaining caps. Align the letters stamped on the differential bearing retaining caps with those on the carriers. Tighten screws of rear axle bearing retaining caps to 95-122 N·m (70-90 lb-ft).

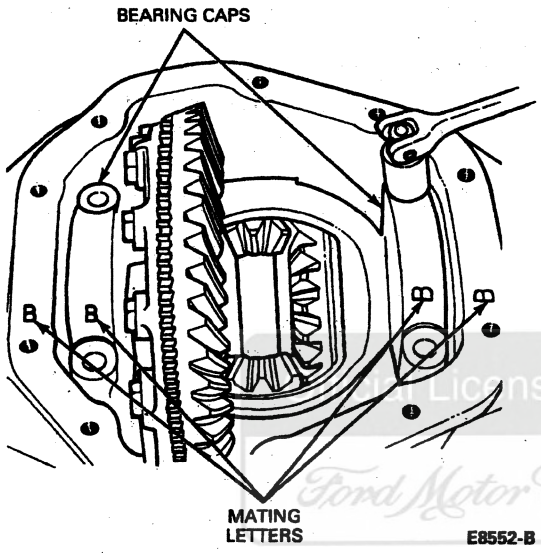

5. Check ring gear and pinion backlash at three equally spaced points with dial indicator.

   Backlash tolerance is 0.13-0.203 mm (0.005-0.008 inch) and cannot vary more than 0.05 mm (0.002 inch) between points checked.

   High backlash is corrected by moving the ring gear closer to the pinion.

   Low backlash is corrected by moving ring gear away from the pinion.

   These corrections are made by switching differential bearing shims (4067) from one side of the differential case (4204) to the other.

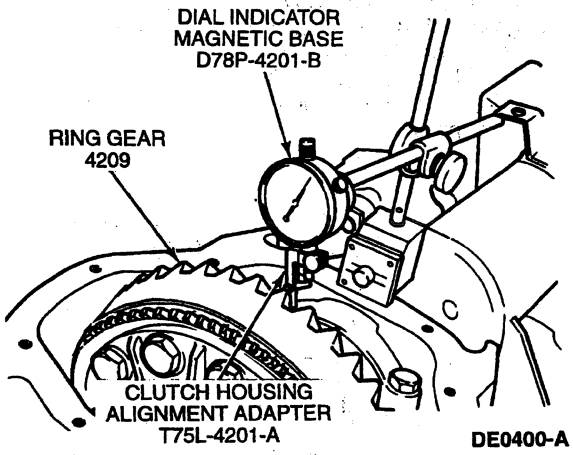

6. To confirm total preload, recheck torque to rotate with an pound-inch wrench as shown. The reading should be higher than the initial reading (taken without the differential case installed, as described under Pinion Position Shim Selection) by the following amount if new bearings have been installed as recommended:

   4.63 and 5.13 ratios = 6-8 lb-in

7. If total preload is too high, remove an equal amount of differential bearing shims from each differential case hub. If total preload is too low, add an equal amount of differential bearing shims to each differential case hub.

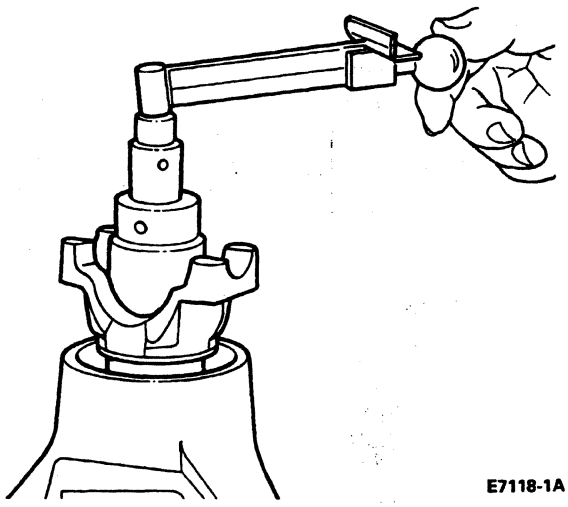

8. To verify the final pinion position, refer to Ring Gear and Pinion Tooth Pattern Interpretation in Adjustments portion of this section.

9. **CAUTION: Clean both flat surfaces with a suitable solvent to remove all traces of oil film.**

   Install new axle housing cover gasket and install axle housing cover (4033). Tighten screws to 41-54 N·m (30-40 lb-ft) as detailed below.

Ford Licensed Product
Ford Motor Company

DISASSEMBLY AND ASSEMBLY (Continued)

10. The following figure shows the flat mounting surface axle housing cover on Dana design rear axles (4001). This axle housing cover requires the use of a silicone rubber sealer material such as Silicone Rubber E7TZ-19562-A or equivalent meeting Ford specification ESL-M4G273-A rather than a gasket.

    The axle housing cover face of the carrier and the flat surface of the axle housing cover must be free of any oil film or foreign material.

    Sealant material must meet specifications of ESL-M4G273-A, ASTM1, GE503, Z1, Z2 and Z3 sealant or equivalent.

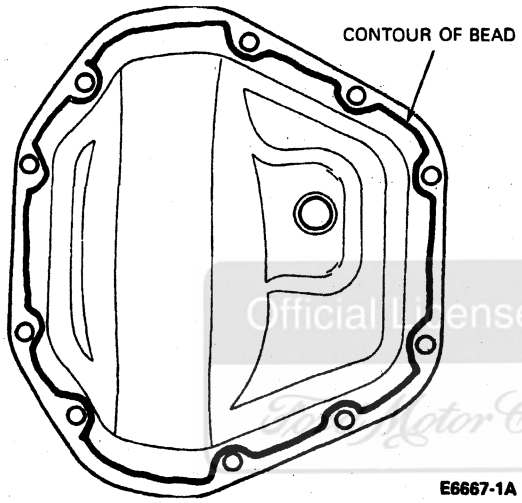

11. NOTE: Axle housing cover must be installed within 15 minutes of application of the silicone or new sealant must be applied.

    Apply Silicone Rubber E7TZ-19562-A or equivalent meeting Ford specification ESL-M4G273-A to surface of axle housing cover. Lay sealer bead 3.18-6.35 mm (1/8 to 1/4 inch) wide on the inside of the axle housing cover screw holes. The bead is not to pass through the holes or outside of the holes.

12. Assemble two axle housing cover screws into axle housing cover at 8 o'clock and 2 o'clock positions. Use these two holes to guide axle housing cover into position on the carrier.

13. Install remaining screws. Tighten alternately and evenly to 41-54 N·m (30-40 lb-ft). Allow one hour cure time before filling carrier with the proper amount of specified lubricant. Refer to the Specifications portion of this section.

14. Install axle shaft (4234). Refer to Section 05-02D.

15. Fill rear axle housing (4010) with specified amount of Rear Axle Lubricant C6AZ-19580-E meeting Ford specification WSP-M2C197-A. Refer to the Specifications portion of this section.

CLEANING AND INSPECTION

Inspection Before Disassembly

SPECIAL SERVICE TOOL(S) REQUIRED

Description	Tool Number
Clutch Housing Alignment Adapter	T75L-4201-A

1. Inspect differential case (4204) and drive pinion prior to removal from the rear axle assembly (4006). These inspections can find the cause of the concern and determine the resolution.
2. Wipe the lubricant from the internal working parts and visually inspect the parts for wear or damage.
3. Rotate the gears to check for any roughness, indicating damaged bearings or gears.
4. Check the teeth of ring gear and pinion for signs of scoring, abnormal wear or nicks/chips.
5. Set up Dial Indicator/Magnetic Base Tool D78P-4201-B or equivalent and check backlash and backface runout of ring gear and pinion.
6. Check ring gear and pinion backlash at three equally spaced points with dial indicator.

   Backlash tolerance is 0.127-0.203 mm (0.005-0.008 inch) and cannot vary more than 0.05 mm (0.002 inch) between points checked.

   - High backlash is corrected by moving the ring gear toward the pinion.
   - Low backlash is corrected by moving the ring gear away from the pinion.
   - These corrections are made by switching differential bearing shims (4067) from one side of the differential case to the other.

Official Licensed Product Ford Motor Company

CLEANING AND INSPECTION (Continued)

7. To check backface runout of ring gear and pinion, mount Dial Indicator / Magnetic Base D78P-4201-B with Clutch Housing Alignment Adapter T75L-4201-A or equivalents on the carrier so the tip of the dial indicator contacts the backface of the ring gear and pinion. Backface runout should be no more than 0.101 mm (0.004 inch). If more than 0.002 inch difference in backlash is measured at adjacent points, the total runout will be beyond specifications.

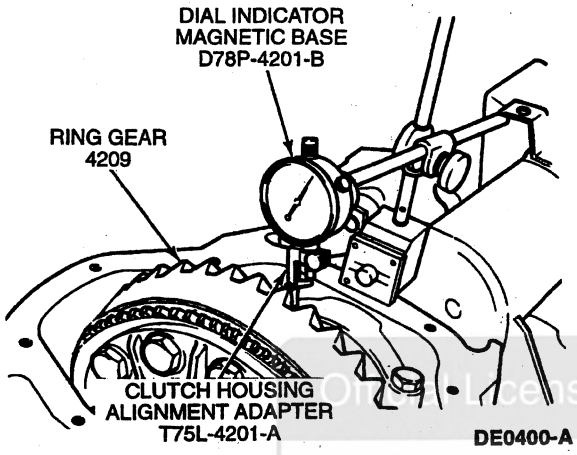

Inspection After Disassembly

1. **CAUTION: The bearing assemblies will fail if they do not seat firmly against the shoulders.**

   Thoroughly clean all parts. Always use new solvent when cleaning bearings. Do not spin dry bearings with compressed air.
2. Oil the bearings immediately to prevent rusting.
3. Inspect the parts for any major damage.
4. Clean the inside of the differential case (4204) before rebuilding.
5. When a scored or chipped ring gear and pinion is replaced, the axle housing must be washed thoroughly.

Inspection procedures for individual parts follow.

Bearing Cups

Check bearing cups for deep scores, galling, or spalling. If a 0.0381 mm (0.0015-inch) feeler gauge can be inserted between a pinion bearing cup and the bottom of its bore at any point around the pinion bearing cup, the pinion bearing cup must be re-seated.

Cone and Roller Assemblies

When operated in the bearing cups, bearing rollers must turn without roughness. Examine the roller ends for step wear. If inspection reveals either a damaged cup or a damaged cone and roller, both parts should be replaced.

Pinion Flange (End Yoke)

Be sure that the flange lugs have not been damaged in removing the driveshaft (4602) or in removing the pinion seal from the pinion. The end of the flange that contacts the bearing cone as well as the nut counterbore and surface of pinion seal must be smooth and free of nicks.

Gears

Examine the teeth of ring gear and pinion for scoring, excessive wear, nicks and excessive chipping. Worn, scored and damaged ring gear and pinion cannot be rebuilt to correct a noisy condition.

Brake Sensor Ring, Anti-Lock

Examine teeth of speed sensor ring. Replace if any are broken or missing.

Carrier Housing

Make sure that the differential and differential pinion bearing bores are smooth. Remove any nicks or burrs from the mounting surfaces of the carrier housing.

Differential Case

Make sure that the hubs where the bearings mount are smooth. Carefully examine the bearing shoulders of differential case, which may have been damaged when the bearings were removed.

Check the fit (free rotation) of the differential side gears (4236) in their counterbores.

ADJUSTMENTS

Ring Gear and Pinion Backlash

SPECIAL SERVICE TOOL(S) REQUIRED

Description	Tool Number
Clutch Housing Alignment Adapter	T75L-4201-A

Refer to Section 05-02D for adjustment of rear wheel bearings and specific adjustments of rear hubs (1109).

Refer to Section 06-04 for rear disc brake assembly and disassembly procedures.

ADJUSTMENTS (Continued)

1. Place differential (4026) into axle housing. Differential master bearings should still be assembled to differential case (4204). Install outboard spacers in same side as removed from, when making overall measurement.

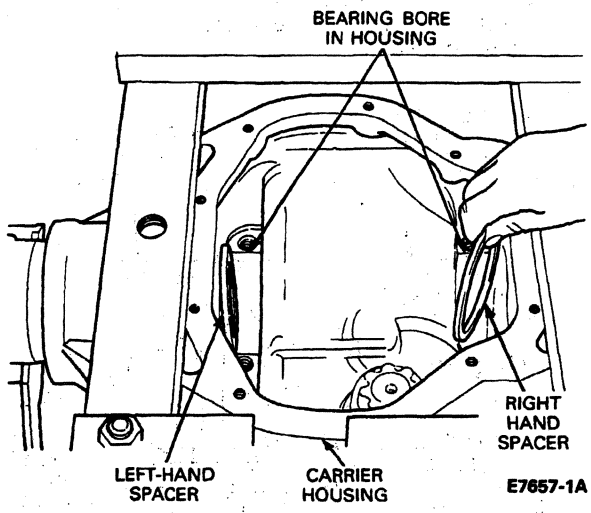

2. Set up dial indicator as shown. Locate dial indicator on a flat surface of one of the ring gear and pinion screws.
3. Force the differential case assembly (ring gear) away from the pinion gear. With force still applied to the differential case set indicator at zero.

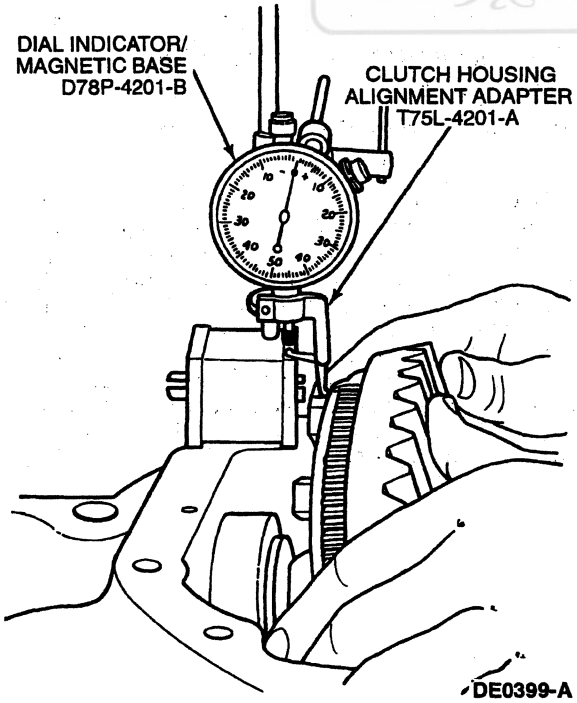

4. NOTE: Repeat the following step until the same reading is obtained each time. This reading will be the necessary amount of pinion shims required between the differential case and differential bearings (4221) on the ring gear and pinion side.

   Force the differential case assembly (ring gear) into mesh with the pinion gear to obtain an indicator reading.
5. Remove indicator and differential case from the carrier.
6. Remove master bearings from differential case.
7. As determined in the measurement obtained under Differential Case End Play Check in the Disassembly and Assembly portion of this section, place the required amount of shims on the ring gear hub of the differential case. For example, if the reading was 1.14 mm (0.045 inch), place 1.14 mm (0.045 inch) of shim on the hub of the ring gear side of the differential case.

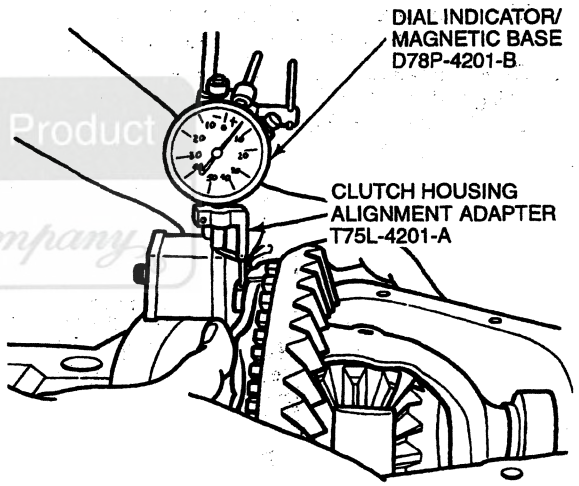

8. Install the bearing cone on the ring gear side of the differential case. Drive the bearing onto the hub using Differential Bearing Cone Replacer D81T-4221-A or equivalent.

Official Licensed Product Ford Motor Company

ADJUSTMENTS (Continued)

9. To determine the correct amount of shims to be placed on the hub of the drive pinion side of the differential case, subtract the reading obtained in this procedure from the Total Differential Case End Play. Total Differential Case End Play was determined under Differential Case End Play Check. When this amount is determined, add 0.25 mm (0.010 inch). This is the required amount of shims to be placed on the hub of the drive pinion side of the differential case.

   For example, Total Differential Case End Play was 2.30 mm (0.091 inch). The reading in Step 7 was 1.14 mm (0.045 inch), and when subtracted from 2.30 mm (0.091 inch) gives 1.16 mm (0.046 inch). 0.25 mm (0.010 inch) is added to give 1.41 mm (0.056 inch) amount of pinion shims to be placed on the hub of the drive pinion side of the differential case.
10. Install required amount of pinion shims on the hub of the drive pinion side of the differential case.
11. Install the bearing cone on the hub of the drive pinion side of the differential case. Place Step Plate D80L-630-8 or equivalent on the ring gear side bearing to protect the bearing during installation of the drive pinion side bearing.
12. Drive the bearing onto the drive pinion side hub using Differential Bearing Cone Replacer D81T-4221-A or equivalent.

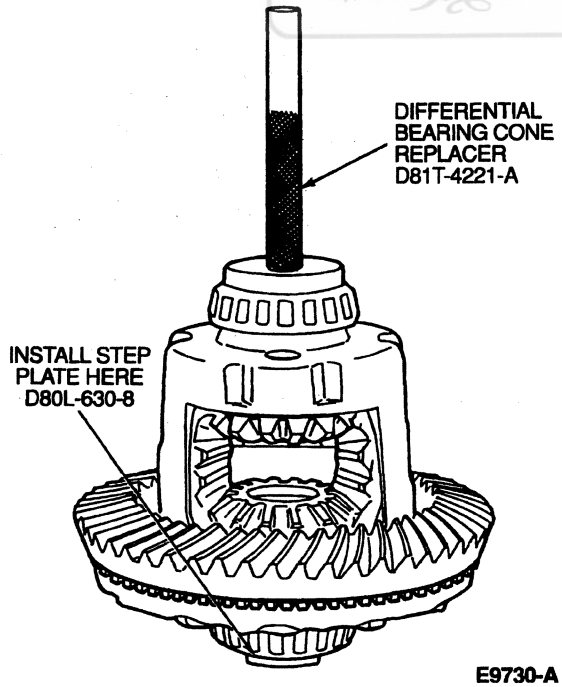

E9730-A

13. **CAUTION: Do not spread rear axle differential carrier (4141) over 0.38 mm (0.015 inch).**

    Install Differential Housing Spreader TOOL-4000-E and Dial Indicator / Magnetic Base D78P-4201-B or equivalents to carrier. Do not spread carrier over 0.38 mm (0.015 inch). Remove indicator.

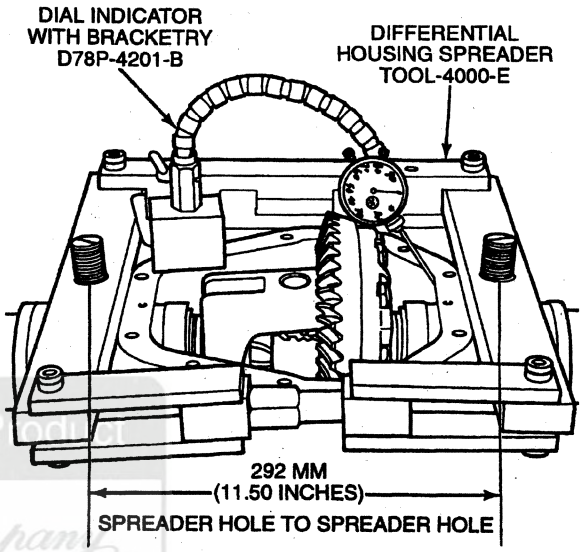

DE0237-A

Ring Gear and Pinion Tooth Pattern Interpretation

Gear Tooth Contact Pattern Check

Refer to Section 05-00.

Check ring gear backlash by installing a dial indicator on the carrier housing. Check ring gear and pinion backlash at three equally spaced points on the ring gear. Backlash tolerance is 0.23 mm (0.005-0.008 inch) and cannot vary more than 0.05 mm (0.002 inch) between the three points. If backlash is high, the ring gear must be moved closer to the pinion, by moving shims to the ring gear side to the opposite side. If backlash is low, the ring gear must be moved away from the pinion by moving shims from the ring gear side to the opposite side.

Ford Motor Company Licensed Product

SPECIFICATIONS

LUBRICANT/ADHESIVE/CLEANER SPECIFICATIONS

Description	Part Number	Ford Specification
Premium Long-Life Grease	XG-1-C or K	ESA-M1C75-B
Threadlock and Sealer	EOAZ 19554-AA	WSK M2G315 A5
Hypoid Gear Lubricant	C6AZ 19580-E	WSP M2C197 A
Silicone Rubber	E7TZ-19562-A	ESL M4G273-A
Rear Axle Lubricant	C6AZ 19580-E	WSP-M2C197 A

LUBRICANT CAPACITIES

Approximate Capacities		
U S Pts	Imperial Pts	Liters
8 5	7 0	4 0

NOTE Use Additive Friction Modifier WSP-M2C196-A or equivalent meeting Ford specification WSP-M2196-A for complete refill of Dana limited slip rear axles (4001)

DANA AXLE ADJUSTMENTS

Description	Specification	Description	Specification
Backlash Between Differential Ring Gear and Pinion	0 13-0 20 mm (0 005-0 008 Inch)	Pinion Bearing Preload (with New Bearings)	2 26-4 53 N m (20-40 Lb-In)
Backlash Maximum Variation Between Checkpoints	0 05 mm (0 002 Inch)	Total (Pinion Plus Differential) Preload with New Bearings	Add 0 68-1 N m (6-9 Lb In), Depending on Ratio, to Pinion Preload

Fasteners

WARNING IF FASTENERS OF A LOWER GRADE OR CLASS ARE TIGHTENED TO THE REQUIREMENTS OF A HIGHER GRADE OR CLASS FASTENER, IT CAN RESULT IN COMPONENT FAILURE (E G , GRADE 5 FASTENER TIGHTENED TO THE REQUIREMENTS OF A GRADE 8 FASTENER)

Inch grade fasteners can be identified by the radial lines embossed upon the head of the fastener and will correspond to the fastener strength by two lines less than actual grade (I e , Grade 8 fastener will display 6 radial lines on the head)

Metric fastener strength can be identified with the class identification embossed on the head of each fastener Increasing numbers represent increasing strength

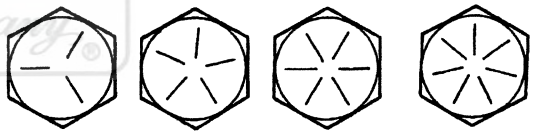

GRADE 5 GRADE 7 GRADE 8 GRADE 9 (HIGH STRENGTH APPLICATIONS)

CUSTOMARY (INCH) BOLTS

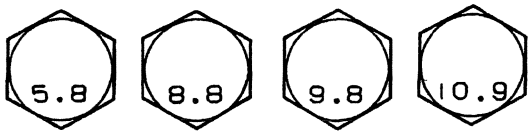

METRIC BOLTS E9237-B

TORQUE SPECIFICATIONS

Description	N m	Lb-Ft
Pinion Shaft Nut	597 677	440 500
Differential Bearing Cap Bolts	95-122	70 90
Ring Gear Retaining Bolts	272 325	200 240
U Bolt Nuts	272-368	200-270
Cover to Housing Bolts	41-54	30-40
Shock Absorber	300-405	220 300
Stabilizer Bar Bolts	37-50	27 37

Official Licensed Product

SPECIAL SERVICE TOOLS/EQUIPMENT

SPECIAL SERVICE TOOLS REQUIRED

Tool Number/ Description	Illustration
T50T-100-A Impact Slide Hammer	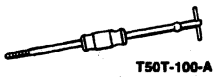 T50T-100-A
T57T-4851-B Companion Flange Holding Tool	 T57T-4851-B
T65L-4851-B Companion Flange Remover	 T65L-4851-B
T67P-4616-A Pinion Bearing Cup Replacer	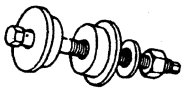 T67P-4616-A
T75L-1165-B Axle Bearing/Seal Plate	 T75L-1165-B
T75T-1176-A Threaded Drawbar	 T75T-1176-A
T75L-4201-A Clutch Housing Alignment Adapter	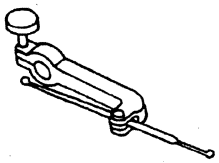 ST1348-A
T77F-1102-A Bearing Cup Puller	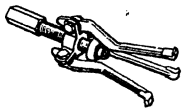 T77F-1102-A
T79P-4020-A Pinion Depth Gauge Includes: T80T-4020-F42 Gauge Block T80T-4020-F43 Screw	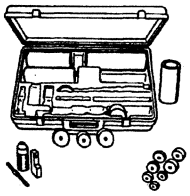 T79P-4020-A

(Continued)

SPECIAL SERVICE TOOLS REQUIRED (Cont'd)

Tool Number/ Description	Illustration
T85T-4209-AH Pinion Shaft Thread Protector	 T85T-4209-AH
T88T-4020-A Gauge Disc	T88T-4020-A ST1053-A
T88T-4020-B Driver Handle	T88T-4020-B 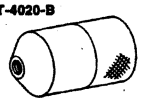 ST1054-A
T88T-4628-A Outer Pinion Bearing Cup Remover	 T88T-4628-A
T88T-4676-A Pinion Oil Seal Replacer	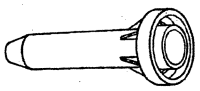 T88T-4676-A
T88T-4851-A Companion Flange Replacer	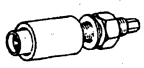 T88T-4851-A

SPECIAL SERVICE TOOLS DESIRED

Tool Number	Description
D78P-4201-B	Dial Indicator/Magnetic Base
D80L-630-8	Step Plate
D80L-1002-L	2-Jaw Puller
D80T-4020-R60	Aligning Adapter
D81L-4000-A	Driver Handle
D81T-4020-F51	Gauge Tube
D81L-4220-A	Pinion and Carrier Bearing Puller
D81T-4221-A	Differential Bearing Cone Replacer
D81T-4222-E	Master Bearings Set
D81T-4616-A	Pinion Bearing Cup Replacer
TOOL-1175-AC	Seal Remover
TOOL-4000-E	Differential Housing Spreader

Official Licensed Product Ford Motor Company

SECTION 05-02D Wheel Hubs and Bearings, Rear, Dana Full-Floating Axle

SUBJECT	PAGE
VEHICLE APPLICATION	05-02D-1
DESCRIPTION AND OPERATION	
Wheel Hubs and Bearings	05-02D-1
DIAGNOSIS AND TESTING	
Wheel Hubs and Bearings	05-02D-1
DISASSEMBLY AND ASSEMBLY	
Bearings, Cups and Seals	05-02D-2
ADJUSTMENTS	
Wheel Hubs and Bearings	05-02D-5
SPECIFICATIONS	05-02D-5
SPECIAL SERVICE TOOLS/EQUIPMENT	05-02D-5

VEHICLE APPLICATION

F-Super Duty and Motorhome Chassis

DESCRIPTION AND OPERATION

Wheel Hubs and Bearings

The full-floating axle features disc brakes. The rear disc brake rotor is mounted to the rear hub (1109). The rear hub is supported or floats on the axle spindle on two opposing tapered roller bearings. The rear hub is retained on the spindle by a ratcheting nut tabbed to a slot on the spindle.

A seal is installed behind the rear wheel bearing inner cone and roller (1244) to prevent rear axle lubricant from leaking.

The rear wheel bearings are packed with a lithium base grease, Premium Long-Life Grease XG-1-C or -K or equivalent meeting Ford specification ESA-M1C75-B, to provide initial lubrication until axle lubricant flows into the rear hubs and rear wheel bearing inner cone and rollers during vehicle operation. These rear axles (4001) are vented through the rear axle housing vent (4022) in the left axle tube.

Dual rear wheels are attached to the rear hub with integral two-piece swiveling lug nuts.

WARNING: ON REAR AXLES WITH DUAL REAR WHEELS, DO NOT USE PRE-1985 CONE-SHAPED, ONE-PIECE LUG NUTS (1012) TO REPLACE THE INTEGRAL TWO-PIECE SWIVELING LUG NUTS. OLDER VEHICLE LUG NUTS CAN COME LOOSE IN VEHICLE OPERATION. DO NOT USE OLDER VEHICLE WHEELS, WHICH HAVE CONE-SHAPED LUG NUT SEATS, ON THIS VEHICLE. DO NOT USE THE NEW DESIGN WHEELS AND LUG NUTS ON OLDER VEHICLE WHEEL HUBS. USE OF INTERMIXED WHEELS CAN LEAD TO DAMAGE TO THE WHEEL MOUNTING SYSTEM AND COULD RESULT IN WHEELS (1007) COMING LOOSE IN OPERATION.

DIAGNOSIS AND TESTING

Wheel Hubs and Bearings

Refer to Section 05-00.

DISASSEMBLY AND ASSEMBLY

Bearings, Cups and Seals

WARNING. DO NOT ATTEMPT TO USE OLDER VEHICLE LUG NUTS (1012) (CONE-SHAPED, ONE-PIECE) TO REPLACE THE INTEGRAL TWO-PIECE SWIVELING LUG NUTS PRE-1985 LUG NUTS CAN COME LOOSE DURING VEHICLE OPERATION DO NOT ATTEMPT TO USE OLDER VEHICLE WHEELS, WHICH HAVE CONE-SHAPED LUG NUT SEATS, ON THIS VEHICLE DO NOT ATTEMPT TO USE THE NEW DESIGN WHEELS AND LUG NUTS ON PAST MODEL WHEEL HUBS AS THIS CAN LEAD TO DAMAGE TO THE WHEEL MOUNTING SYSTEM AND COULD RESULT IN WHEELS COMING LOOSE DURING OPERATION.

NOTE For disassembly and assembly procedures for rear hubs (1109) and rear wheel bearings on Ford full-floating rear axles (4001), refer to Section 05-02A

SPECIAL SERVICE TOOL(S) REQUIRED

Description	Tool Number
Hub Locknut Wrench	T88T 4252 A
Inner Bearing Cup Remover	T88T 1175 B
Driver Handle	T80T 4000-W

(Continued)

SPECIAL SERVICE TOOL(S) REQUIRED (Cont'd)

Description	Tool Number
Outer Bearing Cup Remover	T88T 1175 A
Bearing Cup Replacer	T88T 1175 C
Threaded Drawbar	T75T 1176-A

Disassembly

1 Set the parking brake and loosen the axle shaft attaching bolts and lug nuts

2 Raise the rear wheels (1007) off the floor and place safety stands under the rear axle housing (4010)

3 Release the parking brake

4 Using a heavy-duty wheel dolly such as Rotunda Wheel Dolly 014-00030 or equivalent, raise the wheel to the point that all weight is removed from the wheel bearings Remove the wheel

5 Place a drain pan under the rear hub Remove the axle shaft-to-rear hub bolts and discard them

6 Remove the axle shaft (4234) and discard the rear wheel gasket (1001)

7 Remove the caliper Refer to Section 06-04

Official Licensed Product
Ford Motor Company

Bearings, Cups and Seals

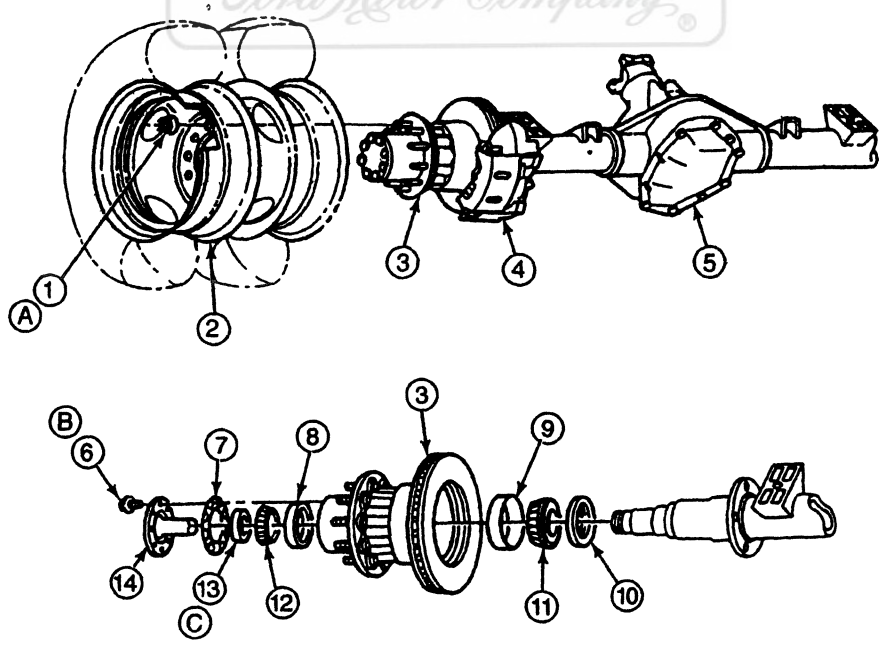

F5648-E

Item	Part Number	Description
1	1012	Lug Nut
2	1007	Wheel
3	1109	Rear Hub and Rotor Assy

(Continued)

Item	Part Number	Description
4	2B120	Disc Brake Caliper
5	4001	Dana Full-Floating Axle, Model 80

(Continued)

DISASSEMBLY AND ASSEMBLY (Continued)

Item	Part Number	Description
6	45816	Axle Shaft-to-Rear Hub Bolt
7	1001	Rear Wheel Gasket
8	1239	Outer Bearing Cup
9	1243	Inner Bearing Cup
10	1175	Inner Hub Seal
11	1244	Rear Wheel Bearing Inner Cone and Roller
12	1240	Rear Wheel Bearing Outer Cone and Roller

(Continued)

Item	Part Number	Description
13	1124	Hub Nut
14	4234	Axle Shaft
A	—	Tighten to 190 N·m (140 Lb-Ft)
B	—	Tighten to 113-153 N·m (83-113 Lb-Ft)
C	—	Refer to Specifications

8. Remove the wheel bearing hub nut using Locknut Wrench T88T-4252-A, so that the drive tangs engage the four slots of the hub nut.

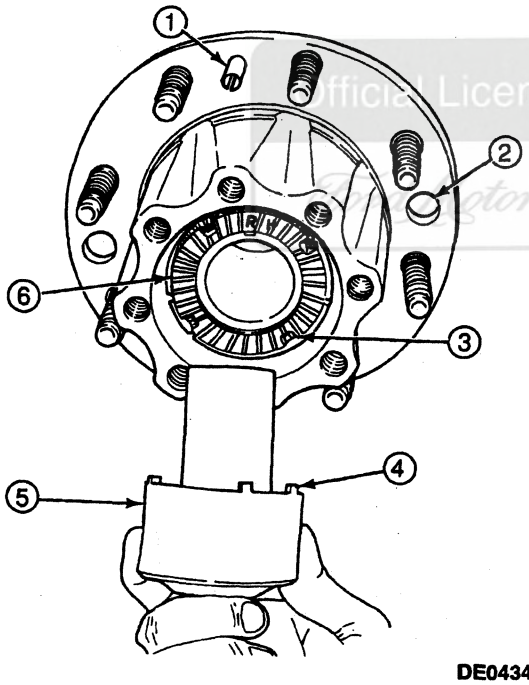

DE0434-A

Item	Part Number	Description
1	—	Valve Stem Alignment Pin (Dual Rear Wheel Only) (Part of 1109)
2	—	Wheel Pin Locating Hole (Part of 1109)
3	—	Slot (Part of 1A124)
4	—	Drive Tang (Part of T88T-4252-A)
5	T88T-4252-A	Locknut Wrench
6	1A124	Hub Nut

9. Remove the outer bearing cone and pull the rear hub and rotor assembly straight out and away from the rear axle.
10. Thoroughly clean the spindle of the rear axle housing.
11. Carefully remove the inner seal from the rear hub assembly with a screwdriver, avoiding damage to the bearing or hub bore.
12. Discard the seal and remove rear wheel bearing inner cone and roller (1244).
13. Clean all old grease and axle lubricant out of the rear hub.
14. Inspect the bearing races and rollers for pitting, galling or erratic wear patterns. Inspect the rollers for end wear. Replace as necessary.

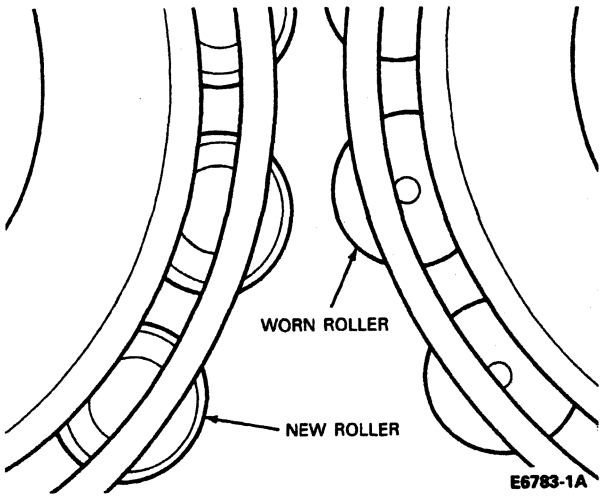

E6783-1A

15. NOTE: To remove hub from rotor, refer to Section 06-04.

    Replace the rear hub if any of the following conditions exist:

    - cracked material around bolt holes
    - depth of holes (40 mm [1.57 inches])
    - threaded for 25 mm (1 inch)
    - oversized holes

DISASSEMBLY AND ASSEMBLY (Continued)

16. Remove the inner bearing cup with Inner Bearing Cup Remover T88T-1175-B and Driver Handle T80T-4000-W.
17. Remove the outer bearing cup with Outer Bearing Cup Remover T88T-1175-A and Driver Handle T80T-4000-W.
18. Inspect the bearing cups. Replace as necessary.

Bearing Cup and Seal Installation — Drum Brakes Shown, Disc Brakes Similar

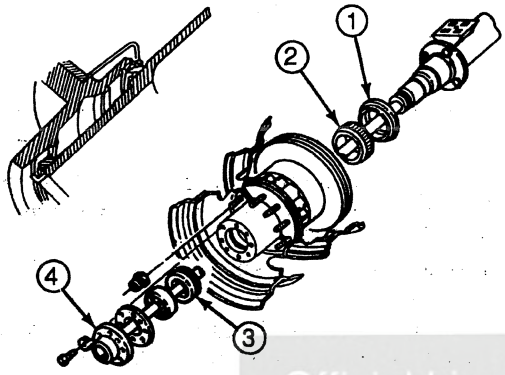

SINGLE AND DUAL REAR WHEEL

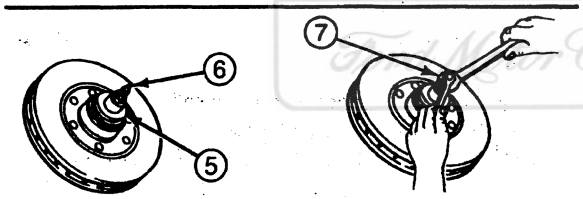

INSTALLING BEARING CUP **E9812-B**

Item	Part Number	Description
1	1175	Inner Hub Seal
2	1244	Rear Wheel Bearing Inner Cone and Roller
3	1240	Rear Wheel Bearing Outer Cone and Roller
4	4234	Axle Shaft
5	T88T-1175-C	Bearing Cup Replacer
6	T75T-1176-A	Threaded Drawbar
7	—	Forcing Nut (Part of T75T-1176-A)

Assembly

NOTE: Check for proper seating of the new bearing cups by trying to insert a 0.038-mm (0.0015-inch) feeler gauge between the cups and the rear hub. The gauge should not enter beneath the cup. Check in several places to be sure the cups are squarely seated.

1. Install cups with Bearing Cup Replacer T88T-1175-C and Threaded Drawbar T75T-1176-A.
2. Attach hub to rotor. Refer to Section 06-04.
3. Pack each bearing cone and roller assembly with Premium Long-Life Grease XG-1-C or -K or equivalent meeting Ford specification ESA-M1C75-B. Use a bearing packing tool such as Rotunda Bearing Packer 160-00045 or equivalent.
4. Place the rear wheel bearing inner cone and roller in the hub.
5. Install a new inner hub seal with suitable hub seal replacer.
6. Wrap the threads of the spindle with electrician's tape to prevent damage while installing rear hub.
7. Position the rear hub at the rear axle housing.
8. Carefully slide the rear hub over the axle housing spindle. Remove the electrician's tape.
9. Install the outer wheel bearing cone and roller and start the bearing hub nut making sure the hub tab is properly located in the keyway prior to thread engagement.

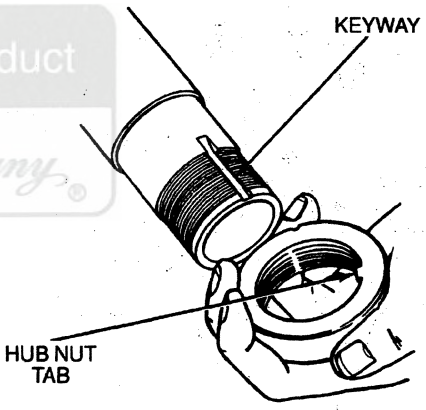

E9811-A

10. NOTE: This procedure is intended to prevent side-to-side end play of the hub and rotor assembly. To verify that there is no side-to-side end play, use a dial indicator magnetically mounted to the spindle end with the indicator on the outboard surface of the hub.

    Install the Hub Locknut Wrench T88T-4252-A so that the drive tangs of the tool engage the four slots of the nut. Apply inward pressure to the socket to separate the ratcheting components of the nut, tighten to 88-102 N·m (65-75 lb-ft). Back off 90 degrees, then retighten to 20-27 N·m (15-20 lb-ft). Rotate hub occasionally while tightening to set the bearings.
11. Prior to installation of the axle shaft, clean and remove any debris in the hub bolt holes.
12. Inspect axle shaft for the following conditions:
    - cracked material around the holes
    - oversized holes

    Replace axle shaft if any of these conditions exist.

Official Licensed Product Ford Motor Company

DISASSEMBLY AND ASSEMBLY (Continued)

13. Install the caliper. Refer to Section 06-04.
14. Install the axle shaft and new rear wheel gasket.
15. Using new axle shaft-to-rear hub bolts, coat the bolt threads with a suitable thread adhesive and install the bolts until they seat.
16. Install the wheels.
17. Remove safety stands and lower the vehicle to the floor.
18. Tighten the lug nuts to specifications.
19. Tighten the axle shaft-to-rear hub bolts to 113-153 N·m (83-113 lb-ft).

ADJUSTMENTS

Wheel Hubs and Bearings

For rear wheel bearing adjustments, refer to Bearings, Cups and Seals in the Disassembly and Assembly portion of this section.

For adjustment procedures for rear hubs (1109) and bearings on Ford full-floating rear axles (4001), refer to Section 05-02A.

SPECIFICATIONS

LUBRICANT/ADHESIVE/CLEANER SPECIFICATIONS

Description	Part Number	Ford Specification
Premium Long-Life Grease	XG-1-C or -K	ESA-M1C75-B

WHEEL END PLAY	
mm	Inch
0.00	0.000

TORQUE SPECIFICATIONS

Description	N·m	Lb-Ft
Dual Rear Wheel Vehicles with Integral Two-Piece Swiveling Lug Nuts (10-Lug Wheel — 9/16-18)	190	140
Hub Nut (To set bearings, back off the hub nut 90 degrees, retighten.)	88-102 20-27	65-75 15-20
Axle Shaft-to-Rear Hub Bolts	113-153	83-113

NOTE: Torque specifications are for clean, dirt- and paint-free, dry bolt and nut threads. Never use oil or grease on studs or nuts.

SPECIAL SERVICE TOOLS/EQUIPMENT

SPECIAL SERVICE TOOLS REQUIRED

Tool Number/ Description	Illustration
T75T-1176-A Threaded Drawbar	 T75T-1176-A
T80T-4000-W Driver Handle	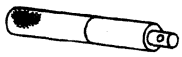 T80T-4000-W
T88T-1175-A Outer Bearing Cup Remover	 T88T-1175-A
T88T-1175-B Inner Bearing Cup Remover	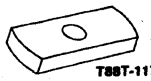 T88T-1175-B
T88T-1175-C Bearing Cup Replacer	 T88T-1175-C
T88T-4252-A Hub Locknut Wrench	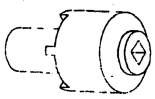 T88T-4252-A

ROTUNDA EQUIPMENT

Model	Description
014-00030	Wheel Dolly
160-00045	Bearing Packer

Official Licensed Ford Motor Company

SECTION 05-02E Differential, Dana Model 80 Locking Axle

SUBJECT	PAGE
VEHICLE APPLICATION	05-02E-1
DESCRIPTION AND OPERATION	
Differential	05-02E-1
DIAGNOSIS AND TESTING	
Differential	05-02E-7
Component Tests	05-02E-11
Installation Test	05-02E-11
Operation Test	05-02E-12
Inspection and Verification	05-02E-7
DIAGNOSIS AND TESTING (Cont'd.)	
Symptom Chart	05-02E-8
REMOVAL AND INSTALLATION	
Differential Case	05-02E-12
DISASSEMBLY AND ASSEMBLY	
Differential Case	05-02E-13
ADJUSTMENTS	
Brakes and Backlash	05-02E-15
SPECIFICATIONS	05-02E-16

VEHICLE APPLICATION

F-Super Duty

DESCRIPTION AND OPERATION

Differential

The differential used in the Dana Model 80 rear locking axle is the Tractech Detroit Locker® 225SL-105A automatic positive-locking traction differential. The differential (4026) comes in a two-piece case enclosing a central locking assembly. The Detroit Locker® differential contains no pinion shaft or gears, but instead features a central driver, which meshes with a right and left clutch assembly.

Detroit Locker® Locking Differential

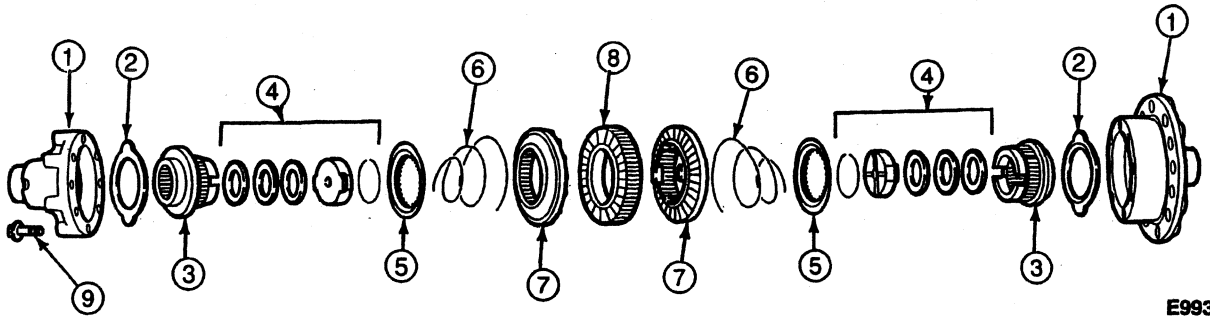

E9930-A

Item	Part Number	Description
1	—	Case Assy
2	—	Thrust Washer
3	—	Side Gear
4	—	Preload Dampener Kit

(Continued)

Item	Part Number	Description
5	—	Spring Retainer
6	—	Spring
7	—	Clutch Assy
8	—	Central Driver Assy
9	—	Case Bolt (8 Req'd)

DESCRIPTION AND OPERATION (Continued)

The locking differential differs from the limited slip differential in that the latter is torque sensitive. The locking differential, however, is speed sensitive but not torque sensitive. The limited slip differential accomplishes its function of torque transfer via a set of friction plates. The amount of torque that is transferred varies with the type of slip condition (torque sensitive), and the speed of the slipping wheel will not increase the torque once it has reached its maximum. The Detroit Locker® locking differential accomplishes torque transfer via the central locking system that transfers 50 percent of the torque to both wheels as though no differential existed and the axle shafts were joined together. But the Detroit Locker® is speed sensitive in that, when cornering, the outer wheel must travel faster than ring gear speed, which will cause that wheel to disengage or cam out from the central driver inside the differential case (4204). When the turn is completed, the outer wheel slows back down to ring gear speed and a preloaded spring pushes the outer wheel clutch back into the lock position. When the outer wheel is disengaged, 100 percent of the available torque goes to the inner wheel. The 50 percent torque transfer and 100 percent torque transfer when turning are known as non-torque biasing, and greatly increase the vehicle's ability to climb out of deep mud, dirt, sand or snow.

The teeth on the central driver assembly and the right and left wheel clutches are dovetailed at a five-degree negative angle so that when they mesh, they cannot inadvertently cam out. When the vehicle is traveling straight, the teeth push more tightly together. Without the dovetail cut of the meshing teeth, the clutches would cam out causing the wheels to disengage from the central driver. Instead, the dovetail cut allows the teeth to mesh together as tightly as possible without the clutches camming out.

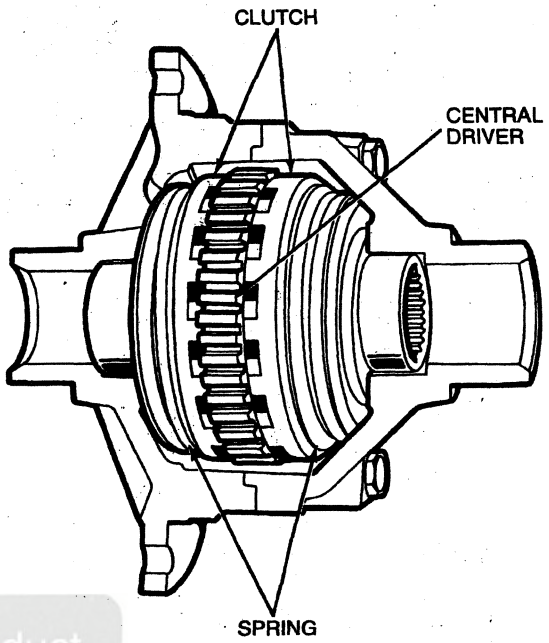

DE0371-A

Ford Licensed Product Company

DESCRIPTION AND OPERATION (Continued)

As long as the vehicle is operated in a straight forward or reverse direction over a smooth surface, the driven clutch assemblies remain locked to the central driver assembly. The Detroit Locker® differential allows the vehicle to perform as if the axle halfshafts had been welded — the axle is completely locked. This means both wheels turn at the same speed. If one wheel loses traction or leaves the ground, the opposite wheel, which still has traction, continues to drive the vehicle until traction is regained by both wheels. There can be no one-wheel spinout.

WITH A CONVENTIONAL DIFFERENTIAL, TRACTION IS LIMITED BY THE SPINNING WHEEL.

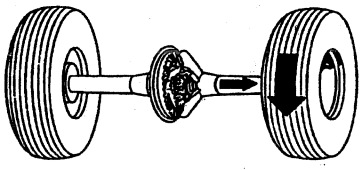

THIS WHEEL STOPS WHEN THIS WHEEL SPINS

WITH A DETROIT LOCKER® DIFFERENTIAL, MAXIMUM TRACTION IS AVAILABLE TO BOTH WHEELS. IF ONE WHEEL LOSES TRACTION, THE OPPOSITE WHEEL WILL STILL DRIVE THE VEHICLE.

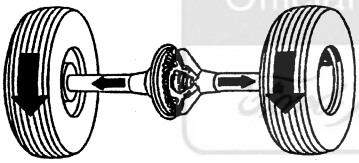

WITH A DETROIT LOCKER® DIFFERENTIAL, THIS WHEEL WILL DRIVE;

EVEN IF THIS WHEEL IS IN MUD, ON ICE OR SNOW, OR OFF THE GROUND!

E9925-A

When the vehicle turns a corner, or when one wheel passes over an obstruction, the outside wheel, or the wheel passing over the obstruction, must travel a greater distance and therefore faster than the other wheel. When this occurs, the Detroit Locker® differential automatically allows for the necessary difference in wheel speed.

During a turn, the inside driven clutch remains completely engaged with the central driver and continues to drive the vehicle. The outside driven clutch automatically disengages from the central driver, allowing the outer wheel to rotate at ground speed in the turn. When the vehicle completes the turn, the outside driven clutch automatically re-engages the central driver, and both wheels again travel at the same speed.

The Detroit Locker® differential powers both wheels yet freely permits wheel speed differentiation when required.

Prime Functions

1. Assures 100 percent of the available torque and increases drawbar pull.
2. Prevents wheel spin and power loss when one wheel loses traction.
3. Compensates for differences in wheel travel when turning or operating on uneven surfaces.

The drive axle illustrated below is equipped with a Detroit Locker® differential. Note that there are no spider gears, but rather two drive members called driven clutch assemblies. They mate with a central driver assembly, which is driven by the ring gear through the differential case assembly.

WITH A DETROIT LOCKER® DIFFERENTIAL DURING A RIGHT TURN . . .

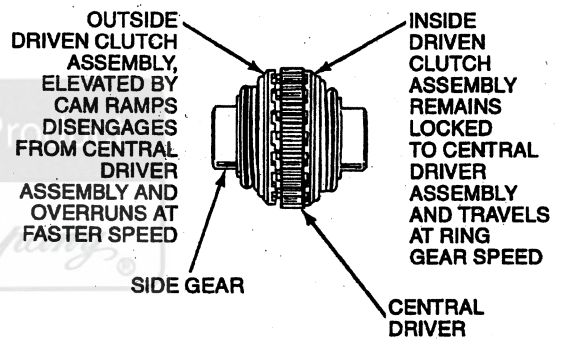

DE0372-A

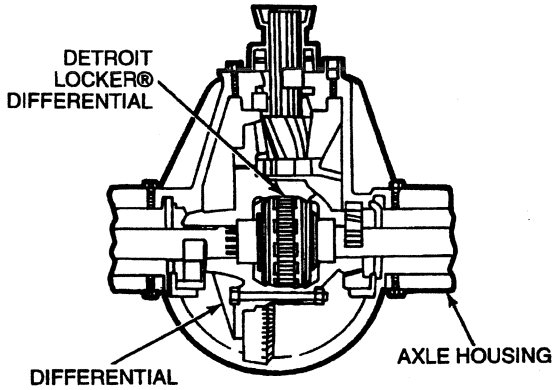

DE0435-A

DESCRIPTION AND OPERATION (Continued)

Operation in Forward or Reverse

When a Detroit Locker® differential-equipped vehicle is operated in straight forward or reverse direction, over smooth terrain, the central driver assembly and driven clutch assemblies remain fully engaged. The Detroit Locker® differential operates as a locked unit; both wheels are driven at ring gear speed and in ring gear direction.

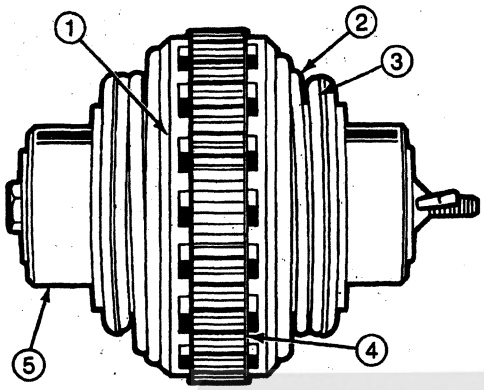

DE0398-A

Item	Part Number	Description
1	—	Clutch Assembly
2	—	Spring
3	—	Spring Retainer
4	—	Central Driver
5	—	Side Gear

Operation in Turns

When making a turn, differential action is required to permit the outside wheel to travel a greater distance, and faster than the inside wheel. Therefore, the Detroit Locker® differential allows the outside wheel to turn faster than the ring gear speed, but does not permit either wheel to turn slower than the ring gear when engine power is applied.

When negotiating a right turn, for example, the right driven clutch of the Detroit Locker® differential remains fully engaged with the central driver. The central driver transmits power to the right driven clutch, which drives the right (inside) wheel at ring gear speed. The left (outside) wheel covers a greater arc than the right (inside) wheel, and, driven by the traction of the road, turns faster than ring gear speed. Likewise, the left driven clutch turns faster than the central driver. The springs act as return devices for the driven clutches when their speeds are again equal.

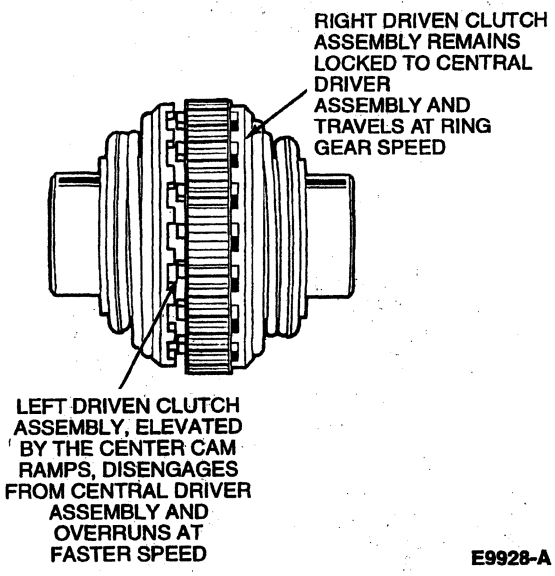

E9928-A

The teeth on the right side of the center cam mesh securely with the teeth on the right driven clutch. With the center cam locked in this position (so that it cannot rotate with respect to the central driver), the cams on the left side of the center cam serve as ramps upon which the mating teeth on the left driven clutch can rise, enabling that driven clutch to disengage from the central driver.

After the left driven clutch assembly rotates forward, the slot in the left holdout ring contacts the central driver key, and positions its lugs ahead of the slots in the center cam. This prevents the left driven clutch from re-engaging with the central driver as it rotates faster than ring gear speed. When this overrunning action ceases and the relative speed of the central driver and overrunning clutch become the same, the left holdout ring lugs re-engage the center cam slots, permitting the left driven clutch to return to full engagement with the central driver.

Official Licensed Publication

DESCRIPTION AND OPERATION (Continued)

When negotiating a left turn, this procedure is reversed However, the operating principle is identical

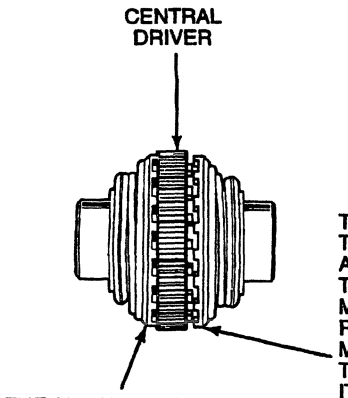

Central Driver Assembly

This assembly consists of the central driver, center cam and snap ring The central driver has splined teeth on its outer circumference These splines mate with internal teeth on the inner circumference of the flanged case half The central driver has teeth that mate with teeth on the driven clutches These teeth transmit torque from the ring gear to the axle shafts and wheels The center cam is mounted inside the central driver The center cam is held in position by a centrally mounted snap ring which permits the center cam to rotate within the central driver

The center cam, which is symmetrical, has the same number of lifts as there are driving teeth on the central driver These lifts have low-friction ramps for disengaging the driven clutches

The center cam has slots at the outer circumference — one narrow slot to mate with the long-tooth key and three wider slots to mate with lugs protruding axially inward from the holdout ring

The central driver has one key (longer tooth) protruding radially inward from its inner diameter to restrict the rotation of the center cam and holdout rings

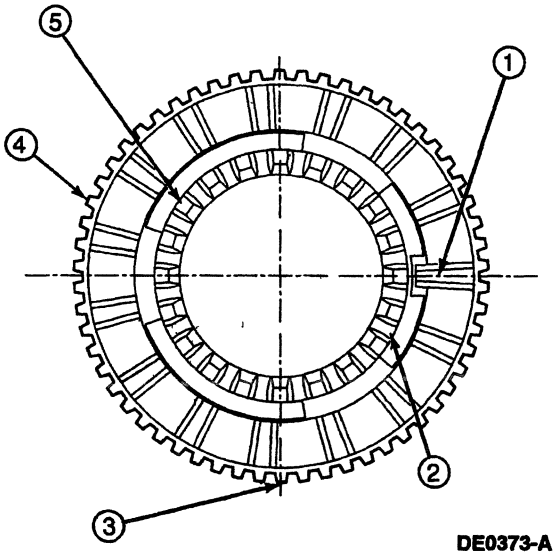

Item	Part Number	Description
1	—	Long-Tooth Key
2	—	Center Cam Slots
3	—	Central Driver
4	—	Driven Teeth
5	—	Center Cam Lifts

Driven Clutch Assembly

This assembly consists of a driven clutch and holdout ring Two identical driven clutch assemblies are located on each side of the central driver assembly

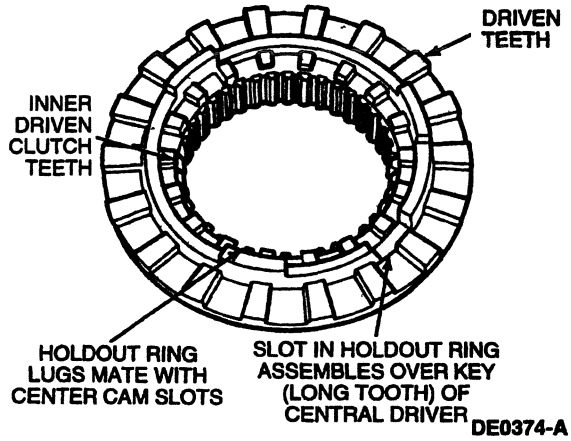

Each driven clutch has radial teeth that mate with teeth on the central driver The inner driven clutch teeth mesh with the cams of the center cam The internal diameter of each driven clutch has splines which engage the external splines of the side gears

Official Licensed Product

DESCRIPTION AND OPERATION (Continued)

When assembling the two driven clutch assemblies to the central driver assembly, the slot in each holdout ring must mesh with the long tooth in the central driver, and the axial lugs on each holdout ring must mate with the center cam slots.

Spring

Detroit Locker® differentials have two identical springs. Their primary function is to ensure proper return of the driven clutches to the central driver. The spring is not utilized to hold the driven clutches and central driver together. (The central driver and driven clutches have a five-degree negative angle on their teeth which serves to hold the two components together.) Thus, replacement of springs will not correct erratic disengagement of the driven clutches and central driver.

The large diameter of the spring bears against the outer face of the driven clutch and the small diameter of the spring bears against the spring retainer, maintaining pressure against the driven clutch. As their name implies, external springs are visible when the Detroit Locker® differential is bolted together.

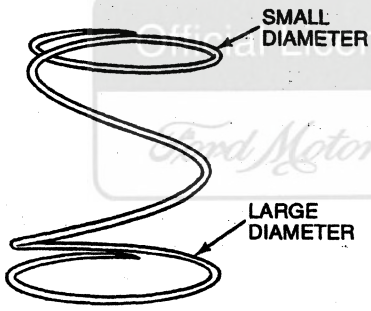

E9933-A

Spring Retainer

Detroit Locker® differentials have two identical spring retainers, which serve as shoulders for the springs.

Detroit Locker® differentials with external springs use retainers that slip over the external splines of the side gears and seat against their external flanges. The spring retainer is positioned so that the spring seats in the concave rim of the spring retainer.

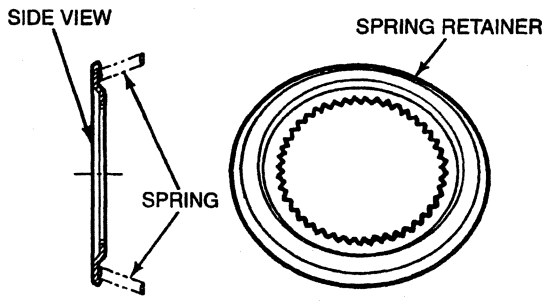

DE0436-A

Side Gear

Detroit Locker® differentials have two side gears that are splined internally to accept the axle shafts. The hub of the side gear is installed in the bore of the differential case assembly. The external splines of the side gears engage the internal splines of the driven clutch assemblies.

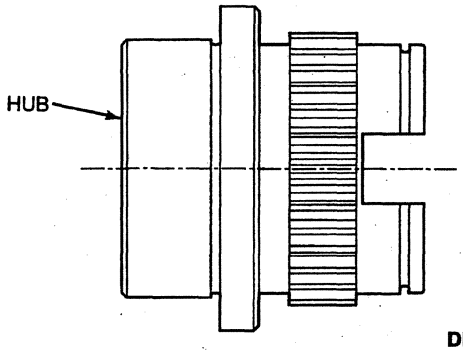

DE0375-A

Preload Dampener Kit

The preload dampener kit consists of three belleville springs, a thrust block and a snap ring. Three belleville springs are installed in parallel into the side gear counterbore with the concave side of the springs facing downward into the counterbore. When assembling the thrust block into the side gear, the side with the oil slots must be visible. The snap ring is used to hold all the components inside the side gear during final assembly.

Preload Dampener Kit

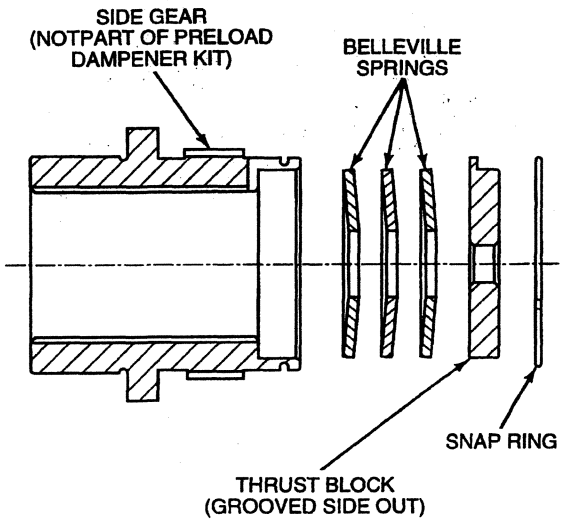

DE0383-A

DESCRIPTION AND OPERATION (Continued)

Thrust Washer

Detroit Locker® differentials with preload have two (2) thrust washers located at each end of the differential assembly. The thrust washers have two tabs or ears on them and fit into special slots inside the differential case to prevent rotation and unnecessary wear. The oil grooves stamped into one side of each thrust washer must be visible when installed in the case bore slots.

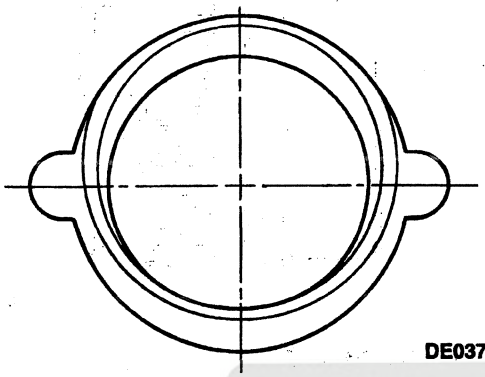

DE0376-A

Differential Case Assembly

A differential case assembly manufactured by Tractech is supplied with Detroit Locker® differentials. The differential case assembly is splined internally to accept the central driver. The differential case is machined to accept the thrust washer tabs and the side gear hub. Match numbers are stamped on the outside diameter of each case half to ensure proper alignment during final assembly.

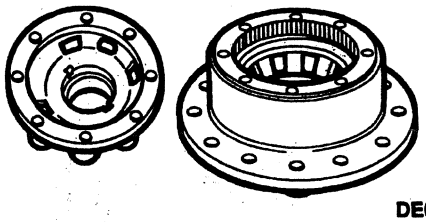

DE0377-A

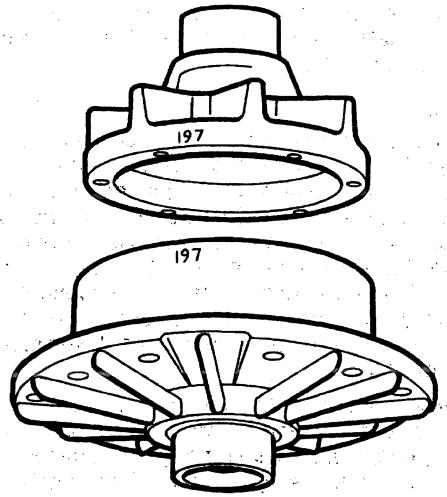

E9960-A

DIAGNOSIS AND TESTING

Differential

Inspection and Verification

1. Inspect differential case (4204) for the following concern(s):

VISUAL INSPECTION CHART

Mechanical
• Excessive wear • Improper installations • Driveline out of adjustment • Worn or damaged axle components (refer to Group 05) • Contaminated lubricant • High viscosity lubricant

2. If concern(s) remain, refer to the following symptom chart.

Official Licensed Product

DIAGNOSIS AND TESTING (Continued)

Symptom Chart

DETROIT LOCKER® DIFFERENTIAL

Condition	Possible Source	Action
• Hub Studs Shearing, Rear Tire Scuffing, Axle Shaft Breakage	• Improper installation, damaged differential	• PERFORM Installation Test REFER to Component Tests in the Diagnosis and Testing portion of this section
	• Overloading or improper weight distribution	• REMOVE excess weight and REDISTRIBUTE the load from side to side, according to the vehicle / axle manufacturer's instructions
	• Bent axle shaft or housing, axle shafts on different center lines	• REPLACE bent axle shafts or housing, or REALIGN hub faces and bolt circles in both the differential carrier and axle housing
	• Worn or damaged axle components	• CHECK the condition of the ring gear, pinion gear, bearings, seals, etc REPLACE as required
	• Foreign matter in axle housing or improper assembly of axle components	• INSPECT for contamination CHECK assembly of axle components
• Steering Difficulty, Vehicle Pulls on Straight Forward Driving or Tends to Go Straight When Making Turns	• Improper installation, damaged differential	• PERFORM Installation Test REFER to Component Tests in the Diagnosis and Testing portion of this section
	• Overloading or improper weight distribution	• REMOVE excess weight and REDISTRIBUTE the load from side to side, according to the vehicle / axle manufacturer's instructions
	• Unequal rolling radii of the drive wheel	• REPLACE tires or ADJUST tire pressures until rolling radii are equal
	• Broken axle shaft	• REPLACE axle shaft
	• Bent axle shaft or housing, axle shafts on different centerlines	• REPLACE bent axle shafts or housing, or REALIGN hub faces and bolt circles in both the differential carrier and axle housing
	• Incorrect wheel alignment	• CORRECT as required Refer to appropriate section in Group 04 of the Body, Chassis Manual
	• Worn or damaged axle components	• CHECK the condition of the ring gear, pinion gear, bearings, seals, etc REPLACE as required
• No Differential Action, Binding in Turns	• Improper installation, damaged differential	• PERFORM Installation Test REFER to Component Tests in the Diagnosis and Testing portion of this section
	• Broken axle shaft	• REPLACE axle shaft
	• Bent axle shaft or housing, axle shafts on different centerlines	• REPLACE bent axle shafts or housing or REALIGN hub faces and bolt circles in both the differential carrier and axle housing
	• Foreign matter in axle housing or improper assembly of axle components	• INSPECT for contamination CHECK assembly of axle components

Official Licensed Product Ford Motor Company

DIAGNOSIS AND TESTING (Continued)

DETROIT LOCKER® DIFFERENTIAL (Continued)

Condition	Possible Source	Action
• Excessive Driveline Noise NOTE Detroit Locker® differentials will emit "metallic" sounds due to backlash built into the unit This is normal	• Improper installation, damaged differential	• PERFORM Installation Test REFER to Component Tests in the Diagnosis and Testing portion of this section
	• Overloading or improper weight distribution	• REMOVE excess weight and REDISTRIBUTE the load from side to side according to the vehicle/axle manufacturer's instructions
	• Unequal rolling radii of the drive wheel	• REPLACE tires or ADJUST tire pressures until rolling radii are equal
	• Broken axle shaft	• REPLACE axle shaft
	• Bent axle shaft or housing, axle shafts on different centerlines	• REPLACE bent axle shafts or housing or REALIGN hub faces and bolt circles in both the differential carrier and axle housing
	• Incorrect wheel alignment	• CORRECT as required REFER to appropriate section in Group 04 of the Body, Chassis Manual
	• Foreign matter in axle housing or improper assembly of axle components	• INSPECT for contamination CHECK assembly of axle components
	• Incorrect ring and pinion adjustments, worn driveline components	• REPLACE or ADJUST components as required
• Excessive Tire Wear	• Improper installation, damaged differential	• PERFORM Installation Test REFER to Component Tests in the Diagnosis and Testing portion of this section
	• Overloading or improper weight distribution	• REMOVE excess weight and REDISTRIBUTE the load from side to side according to the vehicle/axle manufacturer's instructions
	• Unequal rolling radii of the drive wheel	• REPLACE tires or ADJUST tire pressures until rolling radii are equal
	• Broken axle shaft	• REPLACE axle shaft
	• Bent axle shaft or housing, axle shafts on different centerlines	• REPLACE bent axle shafts or housing or REALIGN hub faces and bolt circles in both the differential carrier and axle housing
	• Incorrect wheel alignment	• CORRECT as required
• Grinding Noises	• Improper installation, damaged differential	• PERFORM Installation Test REFER to Component Tests in the Diagnosis and Testing portion of this section
	• Broken axle shaft	• REPLACE axle shaft
	• Bent axle or housing, axle shafts on different centerlines	• REPLACE bent axle shafts or housing or REALIGN hub faces and bolt circles in both the differential carrier and axle housing
	• Worn or damaged axle components	• CHECK the condition of the ring gear, pinion gear, bearings, seals, etc REPLACE as required
	• Foreign matter in axle housing or improper assembly of axle components	• INSPECT for contamination CHECK assembly of axle components
	• Incorrect ring and pinion adjustments, worn driveline components	• REPLACE or ADJUST components as required

Official Ford Product
Ford Motor Company

DIAGNOSIS AND TESTING (Continued)

DETROIT LOCKER® DIFFERENTIAL (Continued)

Condition	Possible Source	Action
• Continuous Clicking Sound in Straight Forward Driving	• Improper installation, damaged differential carrier and axle housing	• PERFORM Installation Test REFER to Component Tests in the Diagnosis and Testing portion of this section
	• Overloading or improper weight distribution	• REMOVE excess weight and REDISTRIBUTE the load from side to side according to the vehicle / axle manufacturer's instructions
	• Bent axle shaft or housing, axle shafts on different centerlines	• REPLACE bent axle shafts or housing or REALIGN hub faces and bolt circles in both the differential carrier and axle housing
	• Unequal rolling radii of the drive wheel	• REPLACE tires or ADJUST tire pressures until rolling radii are equal
• Excessive Backlash in Vehicle Drivetrain, Engine Lug or Vehicle Surge During Turns	• Improper installation, damaged differential	• PERFORM Installation Test REFER to Component Tests in the Diagnosis and Testing portion of this section
	• Worn or damaged axle components	• CHECK the condition of the ring gear, pinion gear, bearings, seals, etc REPLACE as required
	• Incorrect ring and pinion adjustments, worn driveline components	• REPLACE or ADJUST components as required
• Tendency to Side-Slip or Fishtail on Icy Roads	• High crown in road, poor traction surface under all drive wheels	• DECELERATE when side-slip starts to occur DO NOT BRAKE
• Sluggish Re-Engagement of Detroit Locker® Differential Clutch Assemblies	• Improper installation, damaged differential	• PERFORM Installation Test REFER to Component Tests in the Diagnosis and Testing portion of this section
	• Worn or damaged axle components	• CHECK the condition of the ring gear, pinion gear, bearings, seals, etc REPLACE as required
	• High viscosity lubricant	• DRAIN and REPLACE with proper lubricant NOTE The Detroit Locker® differential can operate with any axle lubricant, but weather conditions can adversely affect performance if lubricant is too thick or too thin
	• Unequal rolling radii of the drive wheel	• REPLACE tires or ADJUST tire pressures until rolling radii are equal
• Difficulty in Turning Vehicle from Standing Start	• Improper installation, damaged differential	• PERFORM Installation Test REFER to Component Tests in the Diagnosis and Testing portion of this section
	• Broken axle shaft	• REPLACE axle shaft
	• Bent axle shaft or housing, axle shafts on different centerlines	• REPLACE bent axle shafts or housing or REALIGN hub faces and bolt circles in both the differential carrier and axle housing

Official Published Product Ford Motor Company

DIAGNOSIS AND TESTING (Continued)

DETROIT LOCKER® DIFFERENTIAL (Continued)

Condition	Possible Source	Action
• Erratic Operation of Detroit Locker® Differential; Premature Wear or Failure of Detroit Locker® Differential Components	• Improper installation; damaged differential.	• PERFORM Installation Test. REFER to Component Tests in the Diagnosis and Testing portion of this section.
	• Overloading or improper weight distribution.	• REMOVE excess weight and REDISTRIBUTE the load from side to side according to the vehicle / axle manufacturer's instructions.
	• Unequal rolling radii of the drive wheel.	• REPLACE tires or ADJUST tire pressures until rolling radii are equal.
	• Broken axle shaft.	• REPLACE axle shaft.
	• Bent axle shaft or housing; axle shafts on different centerlines.	• REPLACE bent axle shafts or housing or REALIGN hub faces and bolt circles in both the differential carrier and axle housing.
	• Worn or defective axle components.	• CHECK the condition of the ring gear, pinion gear, bearings, seals, etc. REPLACE as required.
	• Foreign matter in axle housing or improper assembly of axle components.	• INSPECT for contamination. CHECK assembly of axle components.
	• Incorrect ring and pinion adjustments; worn driveline components.	• REPLACE or ADJUST components as required.
	• High viscosity lubricant.	• DRAIN and REPLACE with proper lubricant. NOTE: The Detroit Locker® differential can operate with any axle lubricant, but weather conditions can adversely affect performance if lubricant is too thick or too thin.

Official Ford Product
Ford Motor Company

Component Tests

Installation Test

1. With the engine turned off, raise driving axle(s) until all wheels are out of contact with any surface.
2. Place the transmission (7003) in gear or park so that driveshaft does not rotate.

DIAGNOSIS AND TESTING (Continued)

3 With an assistant on the opposite side, start the installation test by rotating both wheels in a forward direction as far as possible (Both wheels should stop after rotating a short distance)

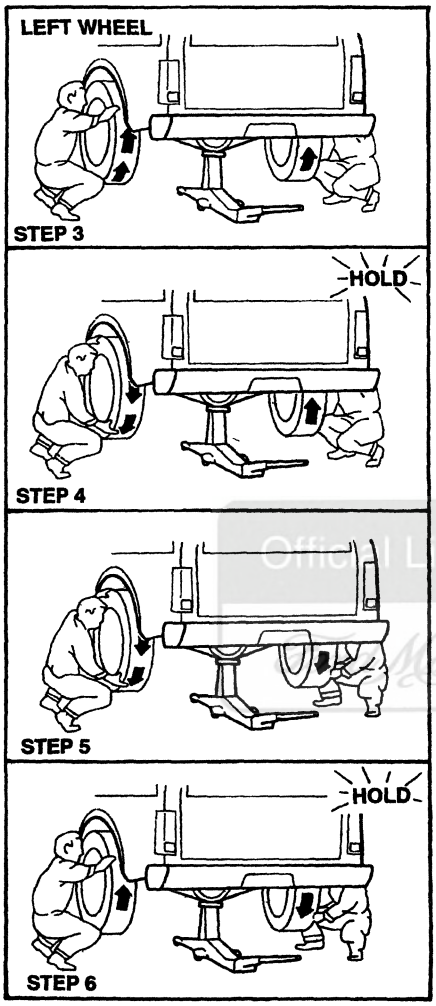

4 With an assistant firmly holding the right wheel forward (against the stop), rotate the left wheel rearward while listening for an indexing or clicking sound (The right wheel must be held firmly against the stop or the left wheel will not disengage freely) Grasp the left wheel to stop its rotation and move it slightly forward (in the direction of the stop) The Detroit Locker® differential should lock up

5 Rotate both wheels rearward as far as possible (Both wheels should stop after rotating a short distance)

6 With the assistant on the opposite side firmly holding the right wheel rearward (against the stop), rotate the left wheel forward, again listening for an indexing or clicking sound (Again, the right wheel must be held firmly against the stop or the left wheel will not disengage freely) Grasp the left wheel to stop its rotation and move it slightly rearward (in the direction of the stop) The Detroit Locker® differential should lock up

7 Repeat Steps 3, 4, 5 and 6, except hold the left wheel against the stops and rotate the right wheel in both forward and reverse

If the above steps are completed successfully and the rotating wheels disengage easily by hand, rotate freely and evenly, and produce a faint indexing or clicking sound, then the Detroit Locker® is properly installed and is functioning correctly

If either wheel does not rotate freely in either direction, recheck each installation step Also, check emergency and primary brakes for possible drag caused by improper adjustment If differential (4026) is still not operating properly, replace or repair as necessary

Operation Test

Check to see that both wheels of each Detroit Locker® differential-equipped axle are driving Make this test under load, so that engine torque is applied through the Detroit Locker® differential with the wheels on the ground One way to achieve this load is to drive up against a solid obstruction (on loose dirt or gravel, if possible) and attempt to spin both wheels together Perform this test in forward and reverse (Exercise caution when performing this test to avoid damage to vehicle or obstruction)

CAUTION: Do not operate the vehicle if both wheels of a Detroit Locker®-equipped axle are not driving. Power to only one wheel can cause serious steering problems and loss of vehicle control, and result in a mishap which can cause property damage, injury, even death

Check camming action On a flat surface, with good traction, drive the vehicle in a tight circle in forward and reverse to be sure that the outside wheel is free to overrun (i e , that the outside tire does not scuff) A clicking or indexing sound may be heard The sound of gear re-engagement may also be heard upon completion of the turn This is normal

REMOVAL AND INSTALLATION

Differential Case

Refer to Section 05-02C

DISASSEMBLY AND ASSEMBLY

Differential Case

Disassembly

1. **WARNING: DO NOT UNBOLT CASE HALVES WITHOUT RUNNING A SUITABLE RETAINING BOLT, WASHERS AND WING NUT LENGTHWISE THROUGH THE CENTER OF THE DIFFERENTIAL ASSEMBLY TO RETAIN THE PRELOADED SPRINGS; OTHERWISE THEY WILL POP LOOSE AND CAUSE POSSIBLE INJURY.**

   Remove eight retaining bolts from upper case half.

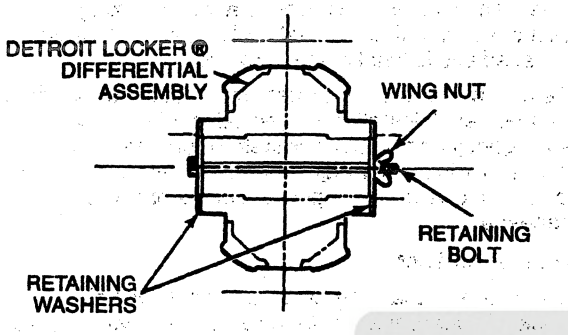

DE0378-A

2. Lift off upper case half and remove differential (4026) assembly. Assembly should come out as a single unit since it has been bolted together in Step 1.
3. Remove and inspect case thrust washers.

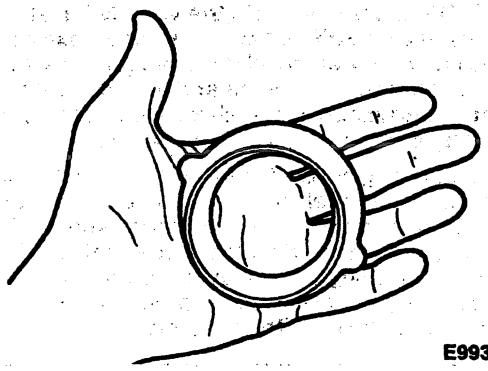

E9939-A

4. **CAUTION: The springs are under load and may cause injury if proper precautions are not taken when disassembling the differential assembly.**

   Carefully unscrew differential retaining bolt, nut and washers.

5. Inspect central driver and clutch assemblies for worn teeth. Inspect holdout ring, side gears, springs, thrust blocks, belleville springs and spring retainers for wear or damage.

Assembly

1. NOTE: Make sure to line up the slots in the holdout rings with the long-tooth key in the central driver.

   Assemble differential the same way it came apart. Put assembly in press and compress the springs.

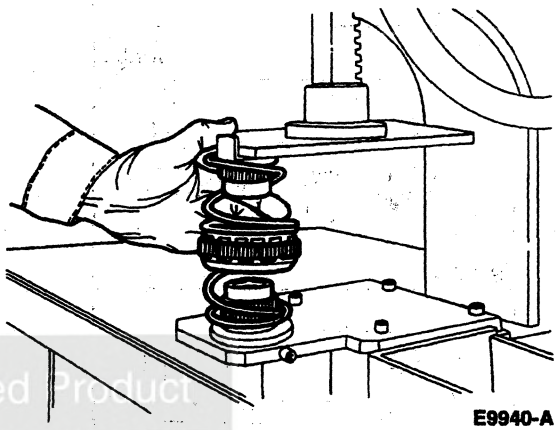

E9940-A

2. Run the retaining bolt, washers and nut through the assembly and tighten securely. Remove assembly from press.

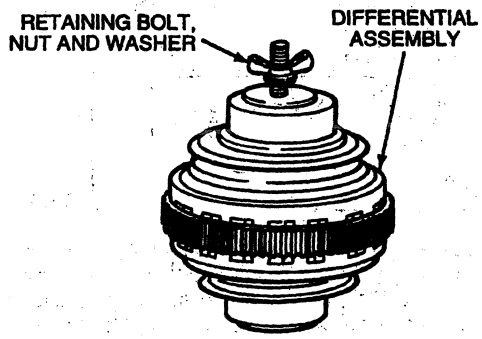

E9941-A

Official Licensed Product
Ford Motor Company

DISASSEMBLY AND ASSEMBLY (Continued)

3. NOTE: It is recommended that a light coat of oil be applied to both thrust washers prior to assembly.

   Install thrust washer in lower case half. Make sure oil groove in thrust washer is visible.

   Make sure tabs of thrust washer line up with matching slots in case half.

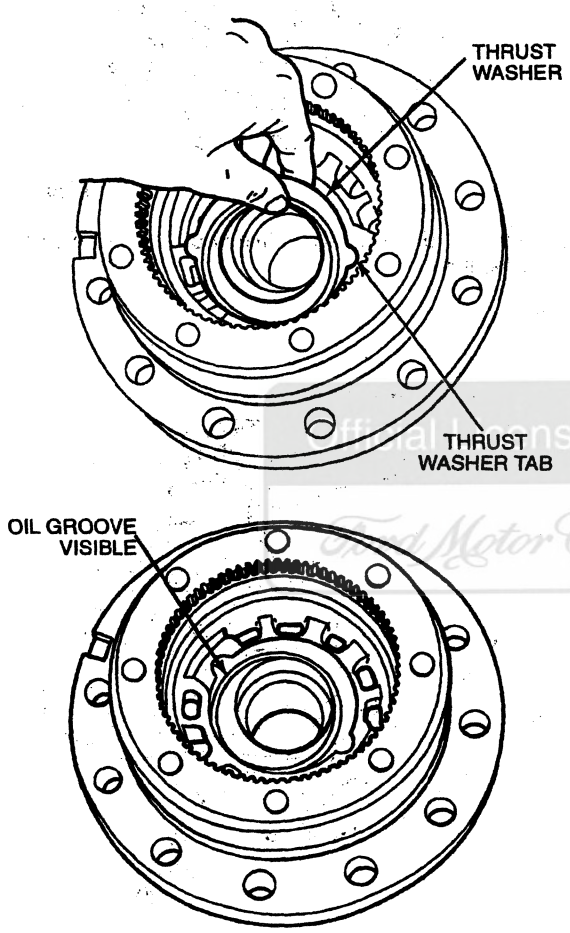

DE0379-A

4. Place differential assembly in lower case half.

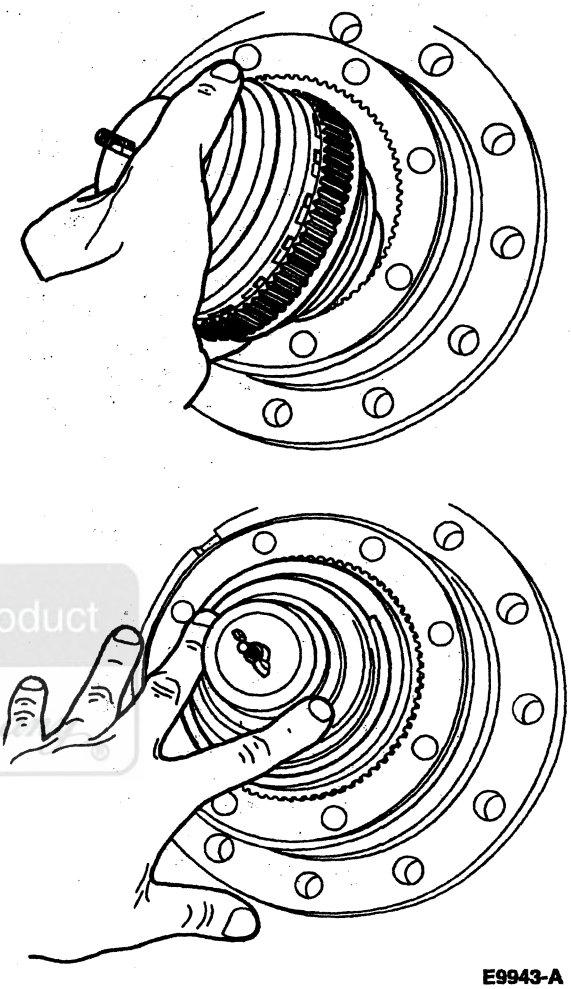

E9943-A

Official Licensed Product Ford Motor Company

DISASSEMBLY AND ASSEMBLY (Continued)

5. NOTE: Apply grease to back of thrust washer to assist in assembly.

   Reinstall thrust washer in upper case half, making sure that oil groove on thrust washer is visible. Install upper case half on lower case half.

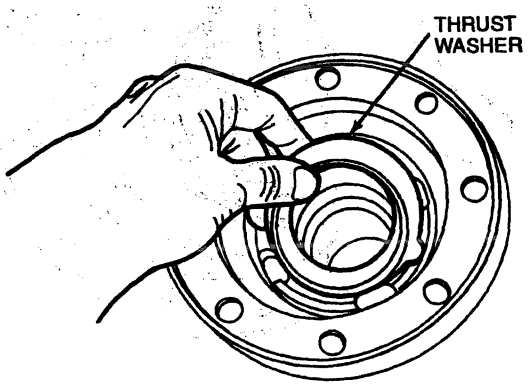

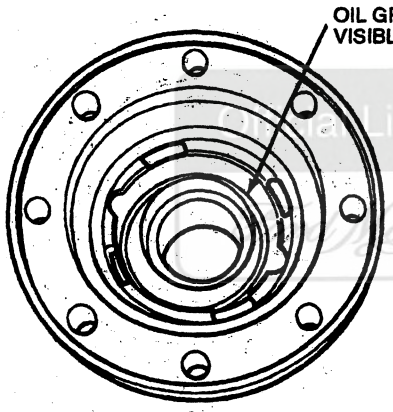

E9944-A

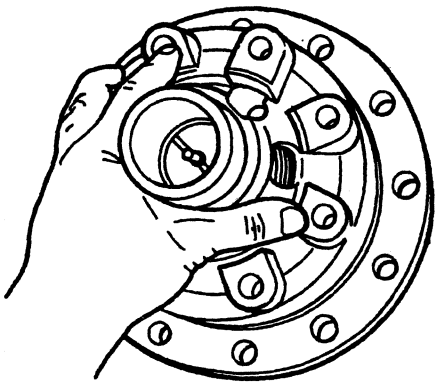

DE0380-A

6. NOTE: Align match numbers on side of case for proper reassembly.

   Install eight bolts and tighten to 103-108 N·m (76-80 lb-ft).

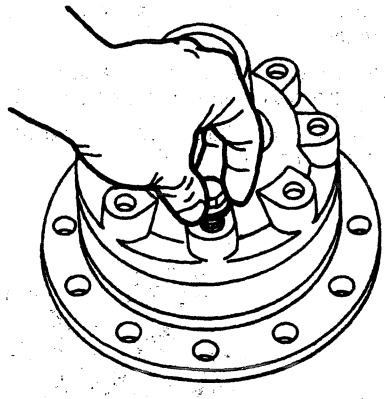

DE0381-A

7. Remove differential retaining bolt, washers and wing nut.

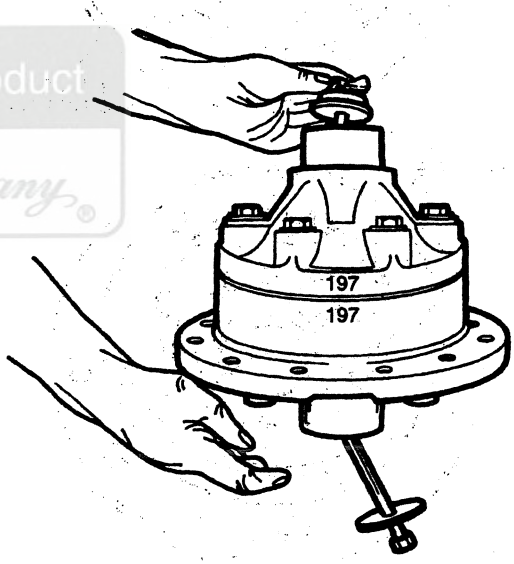

DE0382-A

ADJUSTMENTS

Brakes and Backlash

No adjustments or alterations should be made to the Detroit Locker® differential (4026). Refer to the appropriate section in Group 05 for adjustments to other components in the axle.

When making brake adjustments, the wheels on both sides of the vehicle must be raised and the transmission (7003) placed in neutral so that the ring gear and opposite wheels are free to rotate with the wheels on the side being adjusted.

ADJUSTMENTS (Continued)

The Tractech Detroit Locker® differential is designed to have mean backlash of 6.7 degrees, which when multiplied by the axle ratio gives a system backlash at the driveshaft end yoke of 30 ± 6 degrees. This is about one-tenth of a revolution in the maximum case tolerance stackup. This backlash is built into the system for proper operation and it is not adjustable.

SPECIFICATIONS

TORQUE SPECIFICATIONS

Description	N·m	Lb-Ft
Case Bolts	103-108	76-80

Lubrication Specifications

The Detroit Locker® differential is designed to operate with any specified axle lubricant. No special lubricants or friction modifiers are required. For very cold weather applications, use the lightest lubricant allowed to overcome possible sluggish re-engagement of the driven clutch assemblies.

Official Licensed Product
Ford Motor Company

SECTION 05-03A Axle, Front Drive, Dana Model 50

SUBJECT	PAGE
VEHICLE APPLICATION	05-03A-1
DESCRIPTION AND OPERATION	
Axle, Front Drive	05-03A-1
Hubs, Automatic Locking	05-03A-1
Hubs, Manual Locking	05-03A-1
DIAGNOSIS AND TESTING	
Axle, Front Drive	05-03A-7
REMOVAL AND INSTALLATION	
Axle Housing Pivot Bushing	05-03A-20
Axle, Front	05-03A-7
Differential Seal, LH	05-03A-20
Slip Yoke, RH, and Stub Shaft Assembly, Carrier, Carrier Oil Seal and Bearing	05-03A-17
Spindle, RH and LH Shaft and Joint Assembly	05-03A-12
Steering Knuckle	05-03A-10

SUBJECT	PAGE
DISASSEMBLY AND ASSEMBLY	
Bearing Cup and Drive Pinion Installation	05-03A-26
Cardan-Type U-Joints	05-03A-21
Carrier	05-03A-21
Depth Gauge Check	05-03A-25
Differential Case	05-03A-27
Differential Case Assembly to Carrier	05-03A-28
Pinion and Ring Gear Backlash	05-03A-28
Drive Pinion Installation	05-03A-23
Drive Pinion Preload Check	05-03A-26
Gear Tooth Contact Pattern Check	05-03A-30
Total Differential Case End Play	05-03A-22
SPECIFICATIONS	05-03A-30
SPECIAL SERVICE TOOLS/EQUIPMENT	05-03A-31

VEHICLE APPLICATION

F-250 Heavy Duty 4x4

Official Licensed Product
Ford Motor Company

DESCRIPTION AND OPERATION

Axle, Front Drive

The Dana Model 50 IFS (Independent Front Suspension) is used on vehicles equipped with front leaf springs and is equipped with either automatic or manual locking hubs.

The front axle is of the integral carrier housing, hypoid gear type, in which the centerline of the drive pinion is mounted above the centerline of the ring gear.

On IFS front driving axles, the cover on the front of the carrier housing is integral with the left axle arm assembly. A mylar tag, with the gear ratio and part number, is attached to the rear face of the right-hand axle support arm.

Hubs, Manual Locking

Refer to Section 05-03C.

Hubs, Automatic Locking

Refer to Section 05-03C.

DESCRIPTION AND OPERATION (Continued)

Dana 50-IFS Front Drive Axle, F-250 Heavy Duty 4x4 with Manual Hub Locks

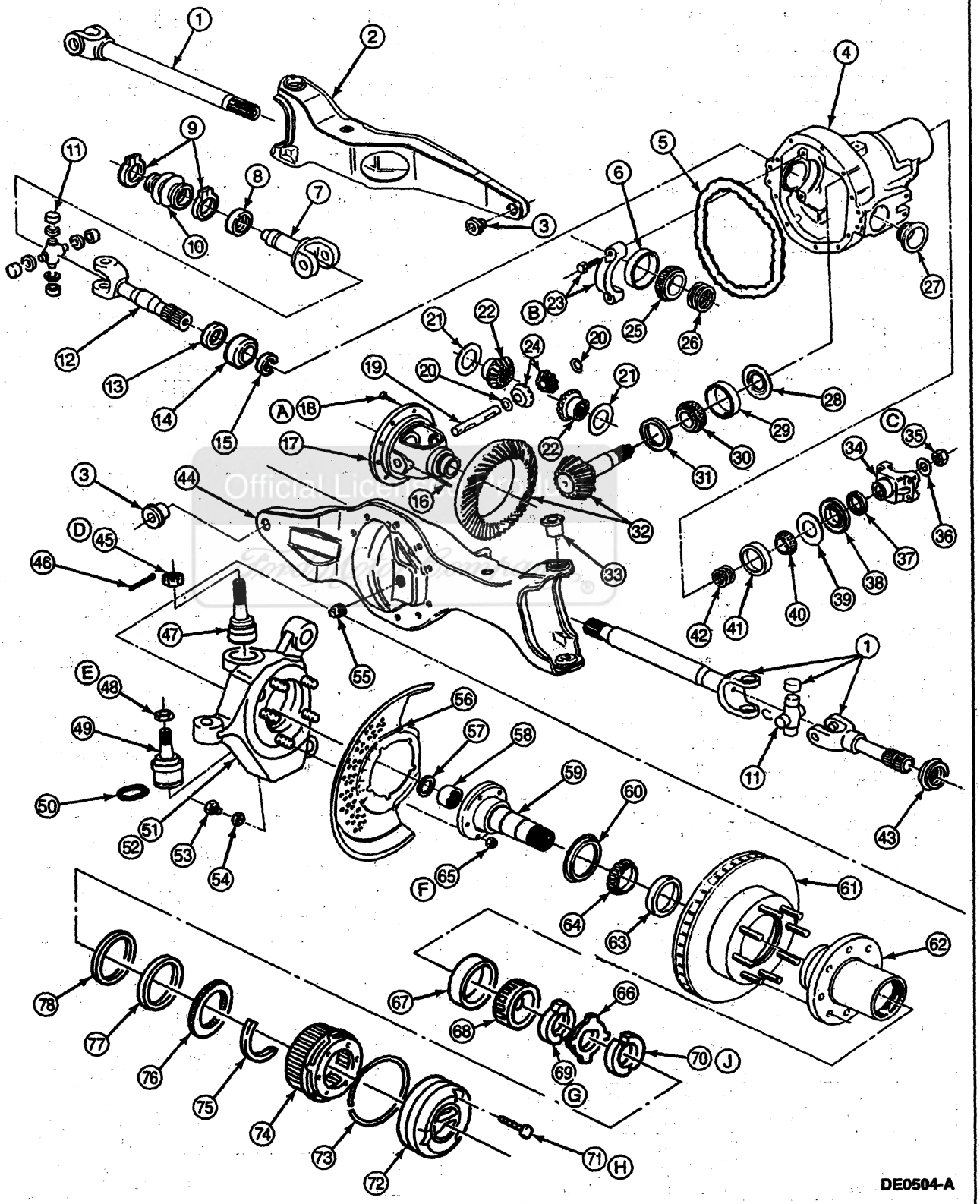

DESCRIPTION AND OPERATION (Continued)

Item	Part Number	Description
1	3219	Shaft
2	3B402	Axle Arm Assy (RH)
3	3B177	Pivot Bushing
4	3010	Housing
5	—	RTV Gasket (Form in Place)
6	4222	Differential Bearing Cup
7	3L387	Slip-Shaft
8	4A460	Seal
9	802857	Keystone Clamp (2)
10	3A429	Boot
11	3249	Front Axle Shaft Universal Joint
12	3M387	Shaft
13	3254	Oil Seal
14	3L123/1225	Bearing
15	3167	C-Clip
16	357228-S	Roll Pin
17	3204	Differential Case
18	350672-S	Bolt
19	4211	Differential Pinion Shaft
20	4230	Differential Pinion Thrust Washer
21	4228	Differential Side Gear Thrust Washer
22	4236	Differential Side Gear
23	—	Cap and Bolt, Differential Bearing (Part of 3010)
24	4215	Pinion Gear
25	4221	Differential Bearing
26	4067	Differential Bearing Shim
27	3254	Differential Seal
28	4670	Oil Slinger
29	4628	Pinion Bearing Cup
30	4630	Differential Pinion Bearing
31	3B067	Selective Shim Slinger
32	3222	Ring Gear and Drive Pinion
33	3B440	Camber Adjuster
34	4851	Front Axle Companion Flange (Universal Joint)
35	351126-S	Nut
36	356504-S	Washer
37	4859	Drive Pinion Oil Seal Deflector
38	4676	Drive Pinion Seal
39	4670	Drive Pinion Shaft Oil Slinger
40	4621	Differential Pinion Bearing
41	4616	Differential Drive Pinion Bearing Cup
42	4109	Drive Pinion Shim (Preload)

(Continued)

Item	Part Number	Description
43	3C132	Axle Rolling Diaphragm Seal (RDS)
44	3B403	Axle Arm Assy (LH)
45	3A049	Nut
46	72035-S	Pin
47	3049	Front Suspension Upper Ball Joint
48	3A050	Nut
49	3050	Front Suspension Lower Arm Ball Joint
50	3K050	Snap Ring
51	3131	Steering Knuckle (LH)
52	3130	Steering Knuckle (RH)
53	373912-S	Stop Screw
54	33925-S	Jam Nut
55	87747-S2	Filler Plug
56	2K004	Front Disc Brake Rotor Shield (RH)
57	3299	Integral Spacer/Seal
58	3123	Bearing, Caged Needle
59	3105	Front Wheel Spindle
60	1190	Wheel Hub Grease Seal
61	1102	Front Disc Brake Hub and Rotor
62	—	Hub (Part of 1102)
63	4222	Inner Wheel Bearing Cup
64	4221	Inner Wheel Bearing
65	35704	Nut
66	1198	Lockwasher
67	4222	Outer Wheel Bearing Cup
68	4221	Outer Wheel Bearing
69	1195	Inner Lock Nut
70	1197	Outer Lock Nut
71	1K104	Capscrew
72	1K104	Cap
73	1K104	Lock Ring
74	1K105	Hub Body
75	3B457	C-Ring
76	—	Steel Thrust Washer — Splined (Part of 3B457)
77	—	Plastic Thrust Washer (Part of 3B457)
78	—	Steel Thrust Washer — Nonsplined (Part of 3B457)
A	—	Tighten to 129-142 N·m (95-105 Lb-Ft)
B	—	Tighten Bolt to 108-122 N·m (80-90 Lb-Ft)
C	—	Tighten to 244-271 N·m (180-200 Lb-Ft)

(Continued)

Official Licensed Product Ford Motor Company

DESCRIPTION AND OPERATION (Continued)

Item	Part Number	Description
D	—	Tighten to 136 N·m (100 Lb-Ft)
E	—	Tighten to 123-149 N·m (91-110 Lb-Ft)
F	—	Tighten to 68-81 N·m (50-60 Lb-Ft)
G	—	While Rotating Front Disc Brake Hub and Rotor, Tighten to 68 N·m (50 Lb-Ft) to Seat Wheel Bearings. Back Nut Off 90 Degrees (1/4 Turn). Tighten to 1.8 N·m (16 Lb-In).

(Continued)

Item	Part Number	Description
H	—	Tighten to 4-6 N·m (35-53 Lb-In)
J	—	While Rotating Front Disc Brake Hub and Rotor, Tighten to 217-278 N·m (160-205 Lb-Ft).

Official Licensed Product
Ford Motor Company

DESCRIPTION AND OPERATION (Continued)

Dana Model 50 IFS Front Drive Axle, F-250 Heavy Duty 4x4 with Automatic Locking Hubs

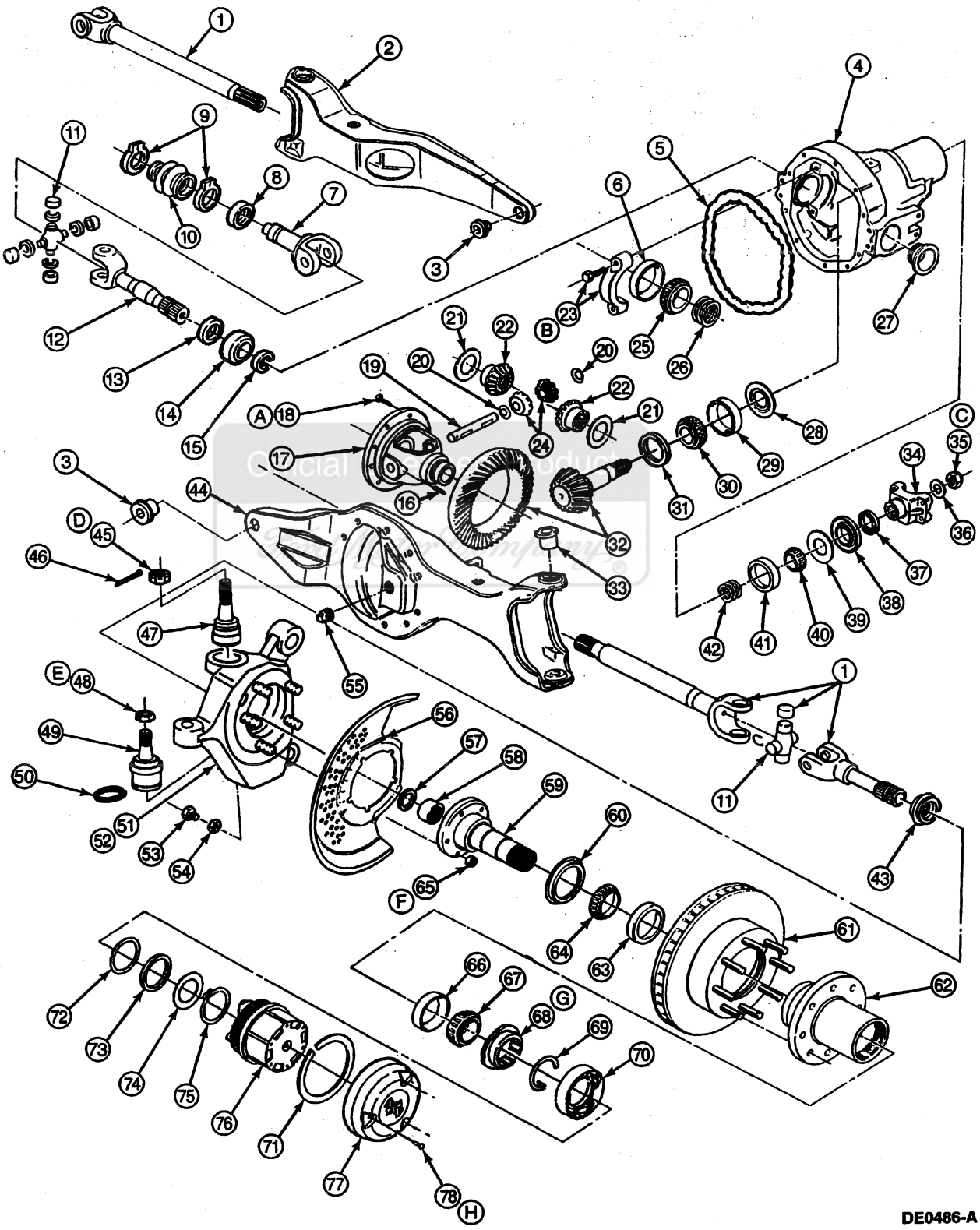

DESCRIPTION AND OPERATION (Continued)

Item	Part Number	Description
1	3219	Shaft
2	3B402	Axle Arm Assy (RH)
3	3B177	Pivot Bushing
4	3010	Housing
5	—	RTV Gasket (Form in Place)
6	4222	Differential Bearing Cup
7	3L387	Slip-Shaft
8	4A460	Seal
9	802857	Keystone Clamp (2)
10	3A429	Boot
11	3249	Front Axle Shaft Universal Joint
12	3M387	Shaft
13	3254	Oil Seal
14	3C123/1225	Bearing
15	3167	C-Clip
16	357228-S	Roll Pin
17	3204	Differential Case
18	350672-S	Bolt
19	4211	Differential Pinion Shaft
20	4230	Differential Pinion Thrust Washer
21	4228	Differential Side Gear Thrust Washer
22	4236	Differential Side Gear
23	—	Cap and Bolt, Differential Bearing (Part of 3010)
24	4215	Pinion Gear
25	4221	Differential Bearing
26	4067	Differential Bearing Shim
27	3254	Differential Seal
28	4670	Oil Slinger
29	4628	Pinion Bearing Cup
30	4630	Differential Pinion Bearing
31	3B067	Selective Shim Slinger
32	3222	Ring Gear and Drive Pinion
33	3B440	Camber Adjuster
34	4851	Front Axle Companion Flange (Universal Joint)
35	351126-S	Nut
36	356504-S	Washer
37	4859	Drive Pinion Oil Seal Deflector
38	4676	Drive Pinion Seal
39	4670	Drive Pinion Shaft Oil Slinger
40	4621	Differential Pinion Bearing
41	4616	Differential Drive Pinion Bearing Cup
42	4109	Drive Pinion Shim (Preload)

(Continued)

Item	Part Number	Description
43	3C132	Axle Rolling Diaphragm Seal (RDS)
44	3B403	Axle Arm Assy (LH)
45	3A049	Nut
46	72035-S	Pin
47	3049	Front Suspension Upper Ball Joint
48	3A050	Nut
49	3050	Front Suspension Lower Arm Ball Joint
50	3K050	Snap Ring
51	3131	Steering Knuckle (LH)
52	3130	Steering Knuckle (RH)
53	373912-S	Stop Screw
54	33925-S	Jam Nut
55	87747-S2	Filler Plug
56	2K004	Front Disc Brake Rotor Shield (RH)
57	3299	Integral Spacer/Seal
58	3123	Caged Needle Bearing
59	3105	Front Wheel Spindle
60	1190	Wheel Hub Grease Seal
61	1102	Front Disc Brake Hub and Rotor
62	—	Hub (Part of 1102)
63	4222	Inner Wheel Bearing Cup
64	4221	Inner Wheel Bearing
65	35704	Nut
66	4222	Outer Wheel Bearing Cup
67	4221	Outer Wheel Bearing
68	—	Wheel Retainer (Nut) (Part of 1K105)
69	3B549	Wheel Retainer Key
70	—	Cam Assy (Part of 1K015)
71	1K106	Lock Ring
72	—	Steel Thrust Washer — Nonsplined (Part of 3B458)
73	—	Plastic Thrust Washer (Part of 3B458)
74	—	Steel Thrust Washer — Splined (Part of 3B458)
75	3B457	Snap Ring
76	1K105	Hub Body
77	1K104	Cap
78	1K104	Capscrew
A	—	Tighten to 129-142 N·m (95-105 Lb-Ft)
B	—	Tighten to 108-122 N·m (80-90 Lb-Ft)

(Continued)

Official Licensed Product

DESCRIPTION AND OPERATION (Continued)

Item	Part Number	Description
C	—	Tighten to 244-271 N·m (180-200 Lb-Ft)
D	—	Tighten to 136 N·m (100-Lb-Ft)
E	—	Tighten to 123-149 N·m (91-110 Lb-Ft)
F	—	Tighten to 68-81 N·m (50-60 Lb-Ft)

(Continued)

Item	Part Number	Description
G	—	While Rotating Front Disc Brake Hub and Rotor, Tighten to 68 N·m (50 Lb-Ft) to Seat Wheel Bearings. Back Nut Off 90 Degrees (1/4 Turn). Tighten to 1.8 N·m (16 Lb-In).
H	—	Tighten to 4-6 N·m (35-53 Lb-In)

DIAGNOSIS AND TESTING

Axle, Front Drive

Refer to Section 05-00.

REMOVAL AND INSTALLATION

Axle, Front

SPECIAL SERVICE TOOL(S) REQUIRED

Description	Tool Number
Keystone Clamp Pliers	T63P-9171-A

Official Licensed Product

Removal

1. NOTE: When raising the vehicle on a hoist, make sure the hoist lift points do not rest on the caliper pins.

   Raise vehicle on a hoist or jack and install safety stands.
2. **CAUTION: Do not let the disc brake caliper (2B120) hang with its weight on the brake hose or the hose may become stretched or twisted.**

   Remove the wheels (1007) and tires, and disc brake calipers. Refer to Section 06-03 in the Body, Chassis Manual.
3. Disconnect the steering linkage from the steering knuckles. Refer to Section 11-03 in the Body, Chassis Manual.
4. Remove front stabilizer bar (5482). Refer to Section 04-01B in the Body, Chassis Manual.
5. Remove front driveshaft (4602). Refer to Section 05-01.
6. Position jack under right-hand axle assembly. Remove the two U-bolts securing the shock absorber mounting plate and front spring to axle arm.
7. Disconnect the vent tube at the differential housing. Remove the vent fitting and install a 3-mm (1/8-inch) pipe plug or a vacuum fitting cap.
8. Remove and discard the keystone clamps and remove the boot from the shaft (right side).
9. Remove the pivot bolt that secures the right-hand axle assembly to front crossmember (5019).
10. Remove the right axle assembly. Pull the axle shaft out of the slip-shaft.
11. Position the jack under the left-hand axle assembly. Remove the two U-bolts securing the shock absorber mounting plate and front spring to tube and yoke assembly.
12. Position a jack under the differential housing.
13. Remove the pivot bolt securing the left-hand axle assembly to front crossmember. Remove the left axle assembly.

REMOVAL AND INSTALLATION (Continued)

Front Suspension

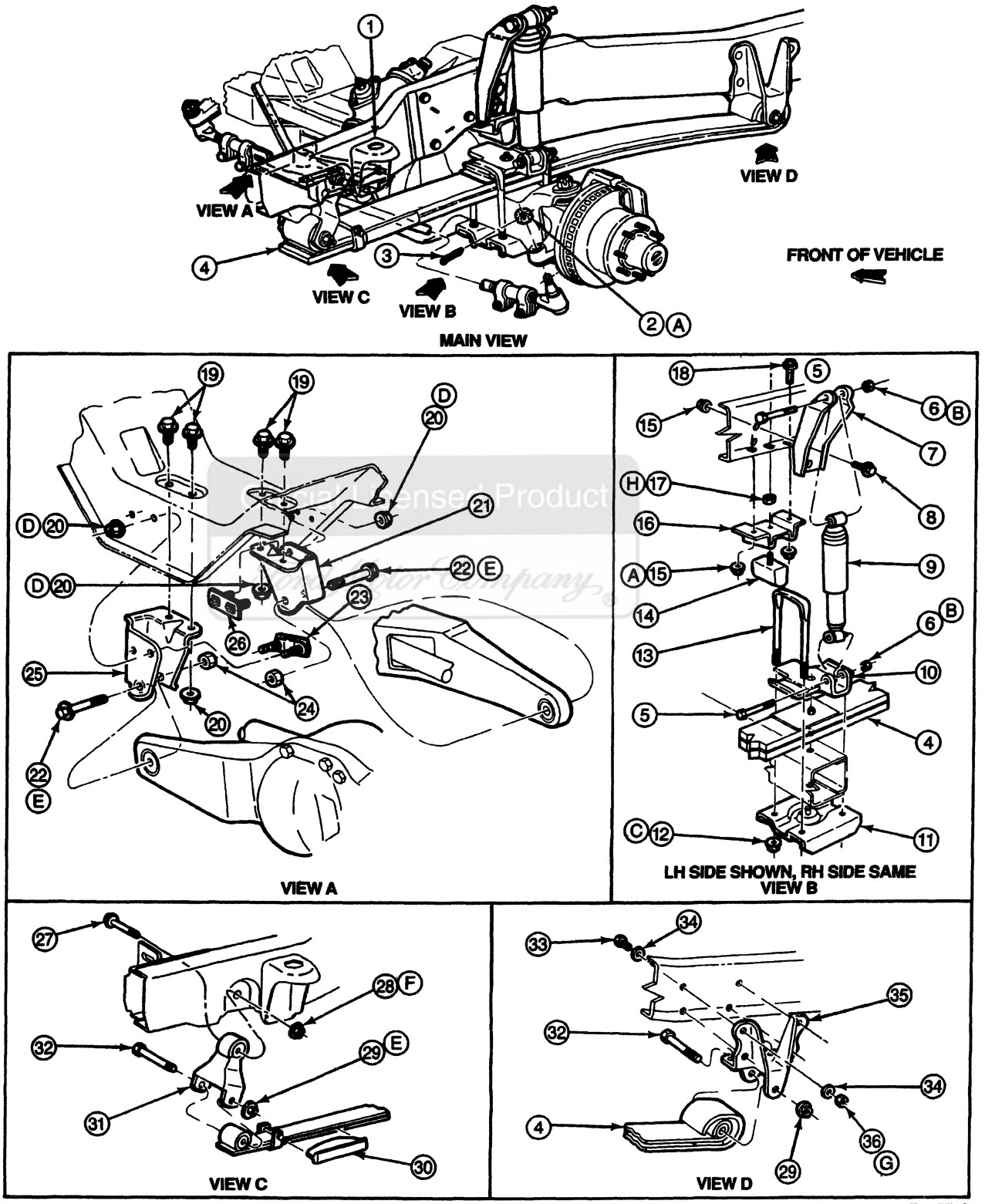

REMOVAL AND INSTALLATION (Continued)

Item	Part Number	Description
1	3590	Steering Gear Sector Shaft Arm
2	N800895-S56	Nut
3	N642569-S36	Cotter Pin
4	5310	Front Leaf Spring
5	N800021-S2	Bolt
6	N806496-S301	Nut
7	18183	Front Shock Absorber Mounting Bracket
8	N802114-S2	Bolt
9	18124	Front Shock Absorber
10	5458	Front Spring Plate Spacer
11	5A500	U-Bolt Spacer
12	N801342-S2	Nut
13	N801485-S56	U-Bolt
14	3020	Front Suspension Bumper
15	N620483-S2	Nut
16	3B251	Front Suspension Bumper Bracket
17	N620482-S2	Nut
18	N605933-S2	Bolt
19	N802114-S2	Bolt
20	N802073-S2	Nut
21	3B176	Axle Pivot Bracket (RH)
22	N801079-S2	Bolt
23	N808243-S100	Bolt and Retainer
24	N620604-S100	Nut

(Continued)

Item	Part Number	Description
25	3K090	Front Axle Bearing Bracket
26	N808528-S100	Bolt and Retainer
27	N601522-S2	Bolt
28	N620485-S56	Nut
29	N620484-S56	Nut
30	5L302	Spring Insulator Sleeve
31	5K316	Front Spring Front Shackle
32	58634-S2	Bolt
33	58634	Bolt
34	44877-S2	Washer
35	5340	Front Spring Mounting Bracket
36	34987-S2	Nut
A	—	Tighten to 77-103 N·m (57-76 Lb-Ft)
B	—	Tighten to 60-80 N·m (44-59 Lb-Ft)
C	—	Tighten to 113-153 N·m (83-113 Lb-Ft)
D	—	Tighten to 88-118 N·m (65-87 Lb-Ft)
E	—	Tighten to 149-201 N·m (110-148 Lb-Ft)
F	—	Tighten to 170-230 N·m (125-170 Lb-Ft)
G	—	Tighten to 47-78 N·m (35-58 Lb-Ft)
H	—	Tighten to 31-40 N·m (23-30 Lb-Ft)

Official Licensed Product Ford Motor Company

Installation

1. Raise vehicle on a hoist or a jack and position left axle assembly at front leaf spring. Install the pivot bolt that secures the axle assembly to the front crossmember.
2. Secure the shock absorber mounting plate to the front leaf spring and axle assembly with the two U-bolts. Tighten bolts to 113-153 N·m (83-113 lb-ft).
3. Position new keystone clamps over the grooves on the boot and crimp the clamp with Keystone Clamp Pliers T63P-9171-A.
4. Align the axle shaft and install in slip-shaft. Position the right-hand axle assembly at front crossmember. Install the boot on the shaft so the boot seats in the grooves. Install the pivot bolt that secures the axle assembly to front crossmember. Tighten bolt to 149-201 N·m (110-148 lb-ft).
5. Install shock absorber mounting plate, front leaf spring and axle assembly using two U-bolts. Tighten bolts to 113-153 N·m (83-113 lb-ft).
6. Install vent fitting to differential housing and connect vent tube to vent using a new hose clamp.
7. Connect the steering linkage. Refer to Section 11-03 in the Body, Chassis Manual.
8. Install disc brake caliper and wheel and tire. Refer to Section 06-03 in the Body, Chassis Manual.
9. Install front driveshaft. Refer to Section 05-01.
10. Install front stabilizer bar. Refer to Section 04-01B in the Body, Chassis Manual.
11. Check and adjust caster, camber and toe.

REMOVAL AND INSTALLATION (Continued)

Steering Knuckle

SPECIAL SERVICE TOOL(S) REQUIRED

Description	Tool Number
Pitman Arm Puller	T64P 3590 F
U Joint Tool	T74P 4635 C
4WD Ball Joint Tool Set	T80T-3010 A
Includes	
Replacer	T80T 3010 A1
Receiving Cup	T80T 3010 A2
Receiving Cup	T80T 3010 A3
Plug	T80T 3010 A4

Removal

1 Remove the front wheel spindle (3105) and the right and left shaft and joint assembly Refer to Spindle, RH and LH Shaft and Joint Assembly in the Removal and Installation portion of this section

2 Disconnect the steering linkage, if necessary, from the knuckle Refer to Section 11-03 in the Body, Chassis Manual

Steering Knuckle Installation

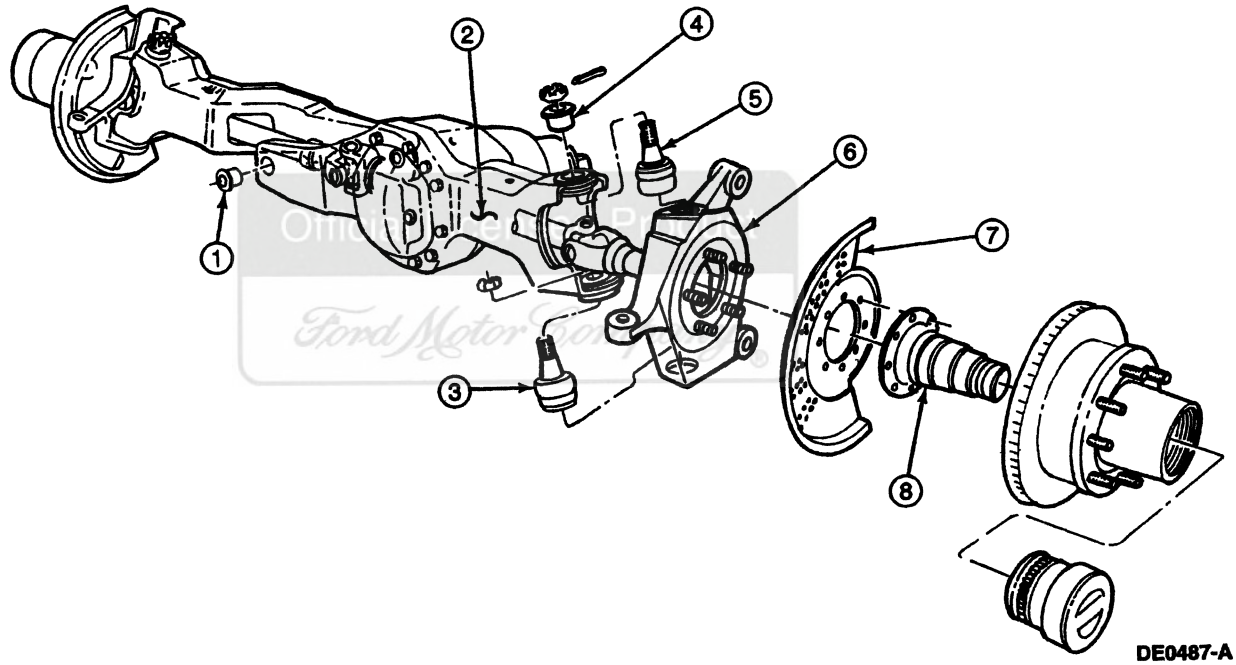

DE0487-A

Item	Part Number	Description
1	3B177	Pivot Bushing
2	3B403	Axle Arm
3	3050	Front Suspension Lower Ball Joint
4	3B440	Camber Adjuster

(Continued)

Item	Part Number	Description
5	3049	Front Suspension Upper Ball Joint
6	3130	Knuckle
7	2K004	Front Disc Brake Rotor Shield
8	3105	Front Wheel Spindle

REMOVAL AND INSTALLATION (Continued)

3. Remove the cotter pin from the stud of the front suspension upper ball joint (3049). Loosen the nut on the top stud and the bottom nut inside the steering knuckle. Remove the top nut.

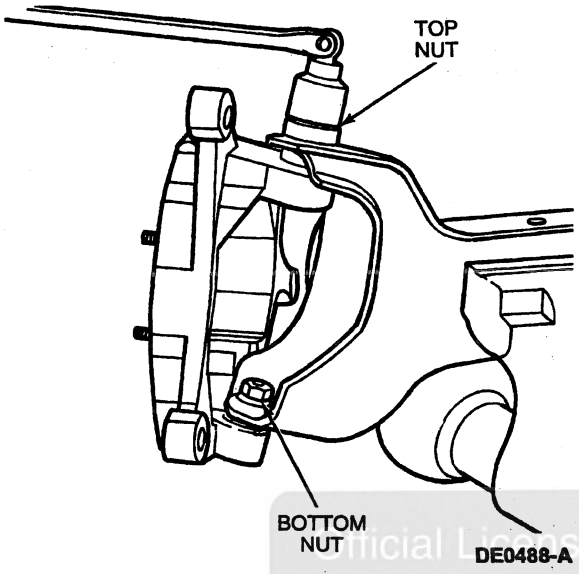

4. Sharply hit the top stud with a plastic or rawhide hammer to free the knuckle from the axle arm. Remove and discard bottom nut.
5. NOTE: Note the orientation of the camber adjuster to make sure of the same camber setting.

   Remove camber adjuster by hand or, if difficulty is encountered, use Pitman Arm Puller T64P-3590-F.

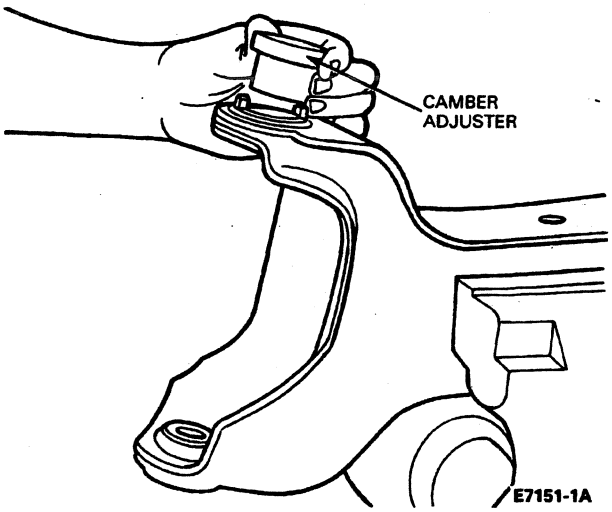

6. Place steering knuckle in vise and remove snap ring from bottom ball joint socket if so equipped.
7. Remove plug from U-Joint Tool T74P-4635-C and replace with Plug T80T-3010-A4 (part of 4WD Ball Joint Tool Set T80T-3010-A).

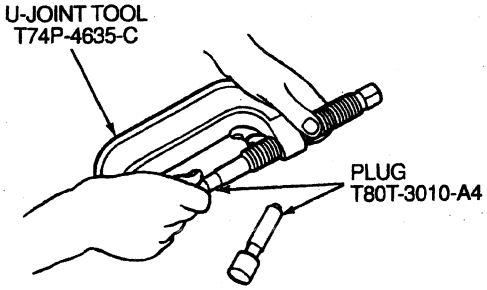

8. Assemble U-Joint Tool T74P-4635-C and Receiving Cup T80T-3010-A2 (part of 4WD Ball Joint Tool Set T80T-3010-A).

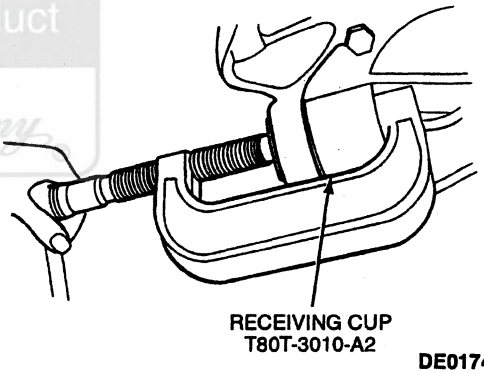

9. NOTE: Always remove front suspension lower ball joint first.

   Turn forcing screw clockwise until front suspension lower ball joint is removed from steering knuckle.
10. Repeat procedure and remove front suspension upper ball joint.

Installation

1. Clean steering knuckle bore and insert front suspension lower ball joint as straight as possible.

Official Licensed Product Ford Motor Company

REMOVAL AND INSTALLATION (Continued)

2. NOTE: If ball joint cannot be installed to the proper depth, realign Receiving Cup T80T-3010-A3.

   To replace the front suspension lower ball joint, assemble U-Joint Tool, Receiving Cup T80T-3010-A3 (part of 4WD Ball Joint Tool Set T80T-3010-A) and Installing Cup from Ball Joint Adapter Set D81T-3010-A or equivalent.

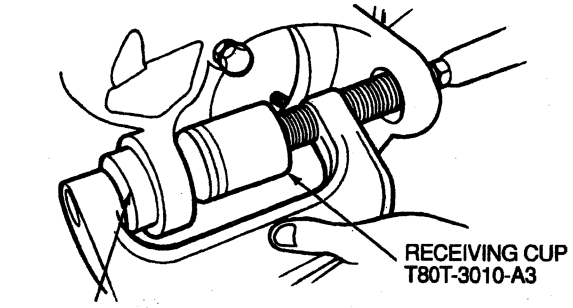

E9732-A

3. Turn forcing screw clockwise until front suspension lower ball joint is firmly seated.
4. Install the snap ring on the front suspension lower ball joint.
5. To install front suspension upper ball joint, assemble the C-Frame, Receiving Cup T80T-3010-A3 and Replacer T80T-3010-A1 (both part of 4WD Ball Joint Tool Set T80T-3010-A).

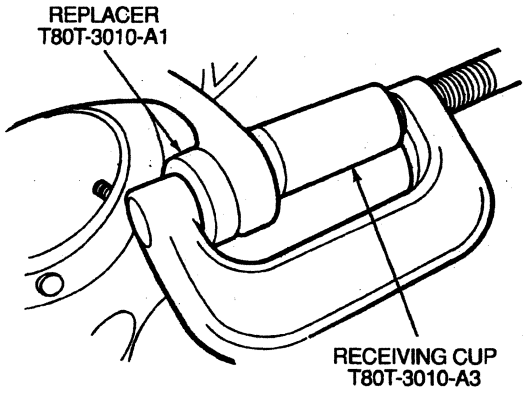

E4214-E

6. Turn forcing screw clockwise until front suspension upper ball joint is firmly seated.
7. Assemble knuckle to axle arm assembly. Install camber adjuster on the stud of the front suspension upper ball joint with the arrow pointing outboard for positive camber, pointed inboard for negative camber.
8. Install new nut on bottom socket finger-tight. Install and tighten nut on top socket finger-tight. Tighten bottom nut to 47 N·m (35 lb-ft).
9. **CAUTION: If the tightening sequence is not followed in this step and Step 10, ball joint life will be reduced.**

   NOTE: Do not loosen top nut to install cotter pin.

   Tighten top nut to 136 N·m (100 lb-ft), then advance nut until castellation aligns with cotter pin hole. Install cotter pin.
10. Retighten bottom nut to 123-149 N·m (91-110 lb-ft).
11. Install the front wheel spindle and the right and left shaft and joint assembly as described in this section.
12. Connect steering linkage, if necessary, to the knuckle. Refer to Section 11-03 in the Body, Chassis Manual.

Spindle, RH and LH Shaft and Joint Assembly

SPECIAL SERVICE TOOL(S) REQUIRED

Description	Tool Number
Impact Slide Hammer	T50T-100-A
Bearing Cup Puller	T77F-1102-A
Spindle Bearing Replacer	T80T-4000-R
Driver Handle	T80T-4000-W
Spindle Seal Replacer	T92T-4000-A
Spindle Seal Replacer	T95T-3132-E
Spindle Seal Replacer	T95T-3132-C
Spindle/Axle Seal Replacer	T83T-3132-A1
Shaft Seal Replacer	T95T-3132-A
Shaft Seal Replacer	T95T-3132-B
Keystone Clamp Pliers	T63P-9171-A

Removal

1. Raise the vehicle and install safety stands.
2. Remove the wheels (1007) and tires.
3. **CAUTION: After removal, the disc brake caliper (2B120) must be wired to the frame or otherwise supported to prevent suspending the disc brake caliper by the flexible hose. If securing the disc brake caliper is not possible, disconnect the brake hose from the disc brake caliper. Plug the hose end to prevent fluid loss and entry of air into the system. Upon installation of the disc brake caliper, bleed the brake system as described in Section 06-00 in the Body, Chassis Manual.**

   Remove the disc brake caliper. Refer to Section 06-03 in the Body, Chassis Manual. Securely wire the disc brake caliper to the frame.

REMOVAL AND INSTALLATION (Continued)

Spindle and LH Shaft and Joint Installation, Typical

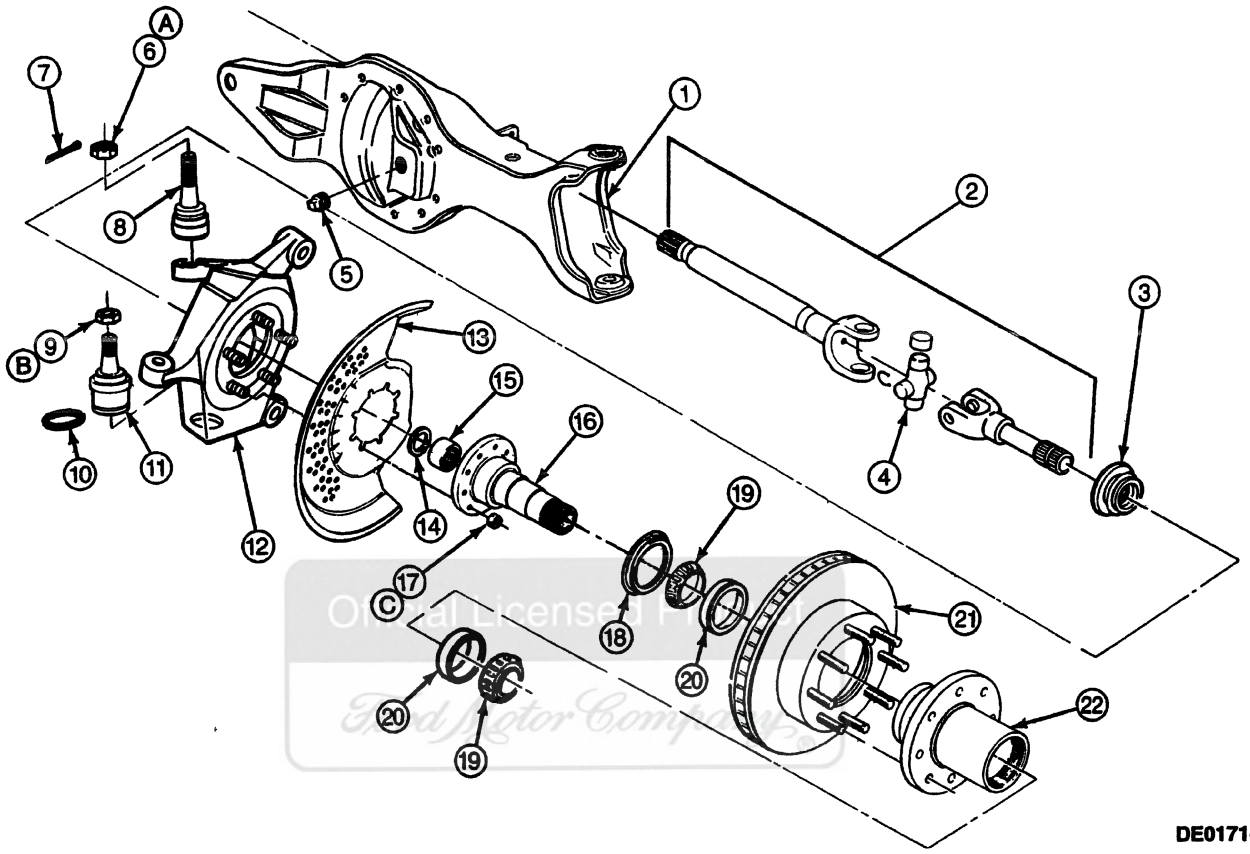

DE0171-B

Item	Part Number	Description
1	3B403	Axle Arm (LH)
2	3219	Shaft
3	3C132	Axle Shaft Rolling Diaphragm Seal (RDS)
4	3249	Front Axle Shaft Universal Joint
5	87747-S2	Filler Plug
6	3A049	Nut
7	72035-S	Pin
8	3049	Front Suspension Upper Ball Joint
9	3A050	Nut
10	3K050	Snap Ring
11	3050	Front Suspension Lower Ball Joint
12	3130	Steering Knuckle Assy
13	2K004	Front Disc Brake Rotor Shield

(Continued)

Item	Part Number	Description
14	3299	Integral Spacer / Seal
15	3123	Caged Needle Bearing
16	3105	Front Wheel Spindle
17	35704	Nut
18	1190	Wheel Hub Grease Seal
19	4221	Wheel Bearing
20	4222	Wheel Bearing Cup
21	1102	Front Disc Brake Hub and Rotor
22	—	Hub (Part of 1102)
A	—	Tighten to 136 N m (100 Lb-Ft)
B	—	Tighten to 123-149 N m (91-110 Lb-Ft)
C	—	Tighten to 68-81 N m (50-60 Lb-Ft)

REMOVAL AND INSTALLATION (Continued)

RH Shaft and Joint Assembly Installation, Typical

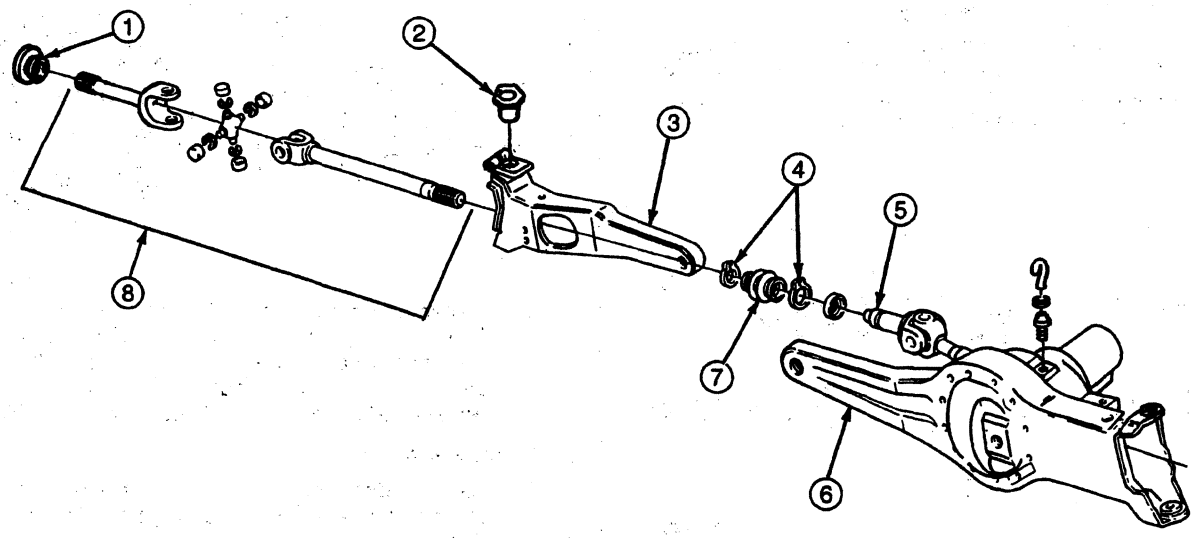

E5372-D

Item	Part Number	Description
1	1175	Rolling Diaphragm Seal
2	3B400	Camber Adjuster
3	3B402	Right Support Arm
4	3B478	Keystone Clamp
5	3A466	Slip-Yoke and Stub Shaft
6	3B403	Left Axle Arm
7	3A429	Rubber Boot
8	3219	Right Shaft and Joint

(Continued)

4. Remove hub locks, wheel bearings, and lock nuts. Refer to Section 05-03C.
5. Remove the front disc brake hub and rotor (1102) and front wheel bearing (1216) from the front wheel spindle (3105).
6. NOTE: Relieve the suction between the axle shaft rolling diaphragm seal (RDS) and the front wheel spindle by gently lifting the seal lip away from the back of the front wheel spindle which will allow the front wheel spindle to slip off the axle shaft.

   Remove the nuts retaining the front wheel spindle to the steering knuckle. Tap the front wheel spindle with a nylon or rawhide hammer to jar the front wheel spindle from the knuckle. Remove the front disc brake rotor shield (2K004).
7. On the left side of the vehicle remove the shaft and joint assembly by pulling the assembly out of the carrier.

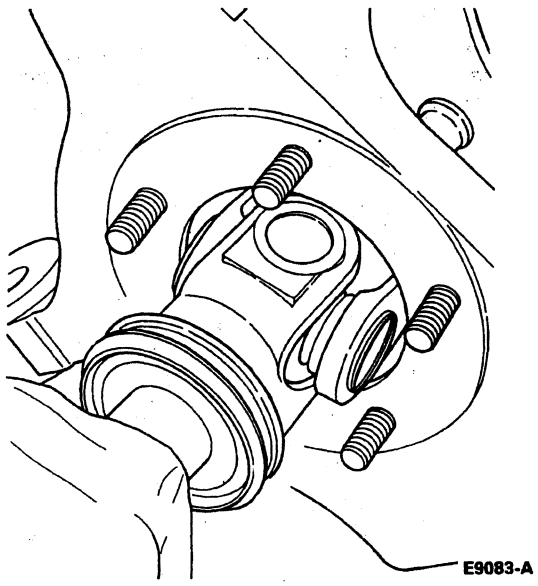

E9083-A

8. On the right side of the carrier, remove and discard the keystone clamp from the shaft and joint assembly and the stub shaft.

REMOVAL AND INSTALLATION (Continued)

9. NOTE: Since the splines on the shaft are not phased, the shaft and joint assembly and slip-yoke must be marked to maintain U-joint phasing during assembly.

   Slide the rubber boot onto the stub shaft. Mark the shaft and slip yoke to maintain U-joint phasing during assembly. Pull the shaft and joint assembly from the splines of the stub shaft.

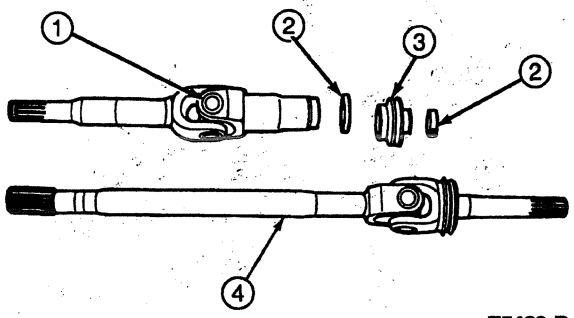

E5420-B

Item	Part Number	Description
1	3219	Shaft and Joint Assy
2	3B478	Keystone Clamp
3	3A429	Boot
4	3220	Shaft and Joint Assy

10. Remove rolling diaphragm seal from axle shaft.
11. Place the front wheel spindle in a vise on the second step of the front wheel spindle. Wrap a shop towel around the front wheel spindle or use a brass-jawed vise to protect the front wheel spindle.
12. Remove the integral spacer / seal and needle bearing from the front wheel spindle with Impact Slide Hammer T50T-100-A and Bearing Cup Puller T77F-1102-A.

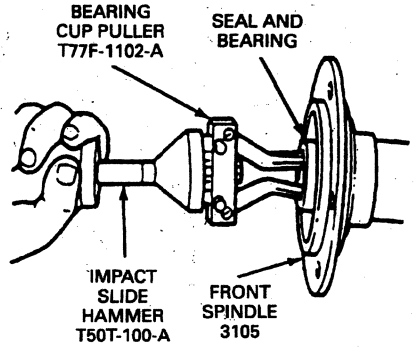

E7132-B

13. Inspect the sealing surfaces of the front wheel spindle for severely corroded, pitted, worn or galled sealing surfaces. Replace front wheel spindle if damaged.

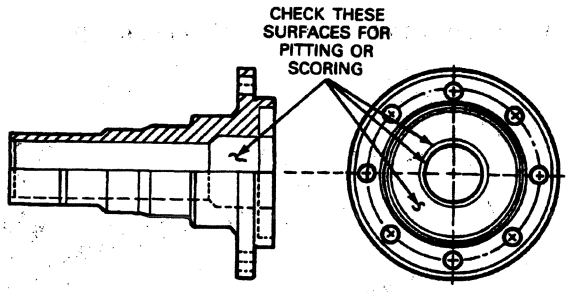

E7133-1A

14. Inspect the outer shaft of the axle shaft assembly for corroded, pitted, worn or galled surfaces in the inner oil seal or needle bearing areas. If damaged, replace the outer shaft. If necessary, replace axle shaft U-joint. Refer to Section 05-01.

Installation

1. Clean all dirt and grease from the bearing bore of the front wheel spindle. Bearing bores must be free from nicks and burrs.
2. NOTE: Replacement spindle bearings are shipped with a corrosion-preventive gel. This is not a lubricant. The bearing must be cleaned and replaced with the specified lubricant.

   Install a new needle bearing with writing facing outward in the bore of the front wheel spindle with Spindle Bearing Replacer T80T-4000-R and Driver Handle T80T-4000-W. Lubricate the bearing with High Temperature 4x4 Front Axle and Wheel Bearing Grease E8TZ-19590-A or equivalent meeting Ford specification ESA-M1C198-A.

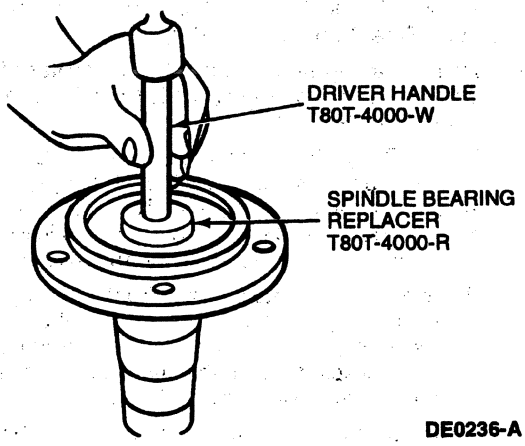

DE0236-A

Official Licensed Product Ford Motor Company

REMOVAL AND INSTALLATION (Continued)

3. Install a new integral spacer needle bearing seal. Pack spindle bearing with grease (see Step 2). Install seal with Seal Replacer T92T-4000-A and Driver Handle T80T-4000-W.

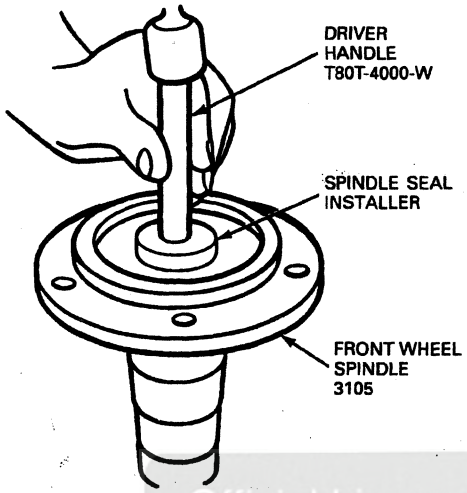

E8789-C

4. Install the rolling diaphragm seal on the axle shaft. The lip of the seal should face toward the front wheel spindle. Seat the rolling diaphragm seal by lightly tapping on the inner sheet metal lip of the seal with a Shaft Seal Replacer T95T-3132-B, Driver Handle T83T-3132-A1 and a hammer to make sure it is seated fully and squarely.

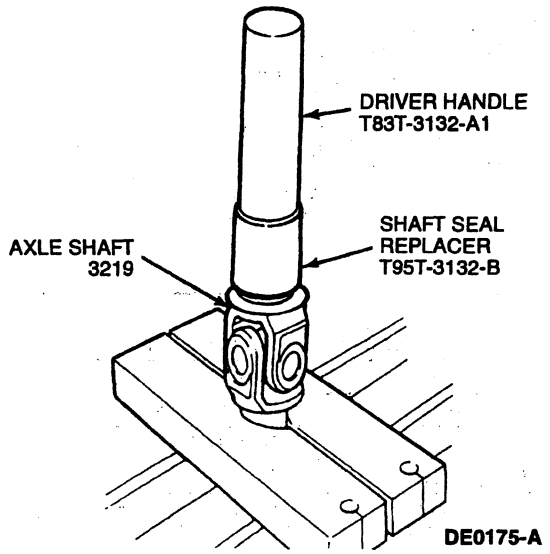

DE0175-A

5. Lightly coat the lips of the axle shaft rolling diaphragm seal (RDS) and the mating surface of the front wheel spindle with High Temperature 4x4 Front Axle and Wheel Bearing Grease E8TZ-19590-A or equivalent meeting Ford specification ESA-M1C198-A.

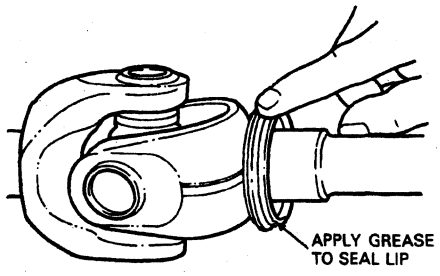

E7137-B

6. NOTE: Since the splines on the shaft are not phased, the shaft and joint assembly and slip yoke must be marked to maintain U-joint phasing during assembly.

   On the right side of the carrier, install the rubber boot and new keystone clamps on the stub shaft slip yoke.

7. Align the mark (made during removal) in the slip yoke barrel with the mark on the shaft and joint assembly.
8. Slide the right shaft and joint assembly through the knuckle and into the slip yoke, making sure the splines are fully engaged.
9. Slide the boot over the assembly and crimp the keystone clamp using Keystone Clamp Pliers T63P-9171-A.
10. On the left side of the carrier, slide the shaft and joint through the knuckle and engage the splines on the shaft in the carrier.
11. NOTE: Make sure the grease seal lip totally encircles the front wheel spindle.

    Install the front disc brake rotor shield and front wheel spindle onto the steering knuckle. Install and tighten the nuts of the front wheel spindle to 68-81 N·m (50-60 lb-ft).

12. **CAUTION: Any dents or nicks in the can of the wheel bearing seal can prevent proper sealing.**

    Install the front disc brake hub and rotor on the front wheel spindle. Install the outer wheel bearing into the cup. Refer to Section 05-03C.

13. Install the wheel bearing, lock nut, front wheel outer bearing retainer washer (1195), snap ring and locking hubs. Refer to Section 05-03C.
14. Install the disc brake caliper. Refer to Section 06-03 in the Body, Chassis Manual.
15. Fill front axle lubricant.
16. Install wheel and tires.
17. Remove the safety stands and lower the vehicle.

Official Licensed Product

REMOVAL AND INSTALLATION (Continued)

Slip Yoke, RH, and Stub Shaft Assembly, Carrier, Carrier Oil Seal and Bearing

SPECIAL SERVICE TOOL(S) REQUIRED

Description	Tool Number
Bench Mounted Holding Fixture	T57L-500-B
Differential Housing Spreader Adapters	T80T-4000-B
Impact Slide Hammer	T50T-100-A
Needle Bearing Replacer	T83T-1244-A
Driver Handle	T80T-4000-W

Removal

1. Remove the nuts and U-bolts connecting the driveshaft to the yoke. Disconnect the driveshaft from the yoke. Wire the driveshaft out of the way so it will not interfere in the carrier removal process.

RH Slip Yoke and Stub Shaft Assembly, Carrier, Carrier Oil Seal and Bearing

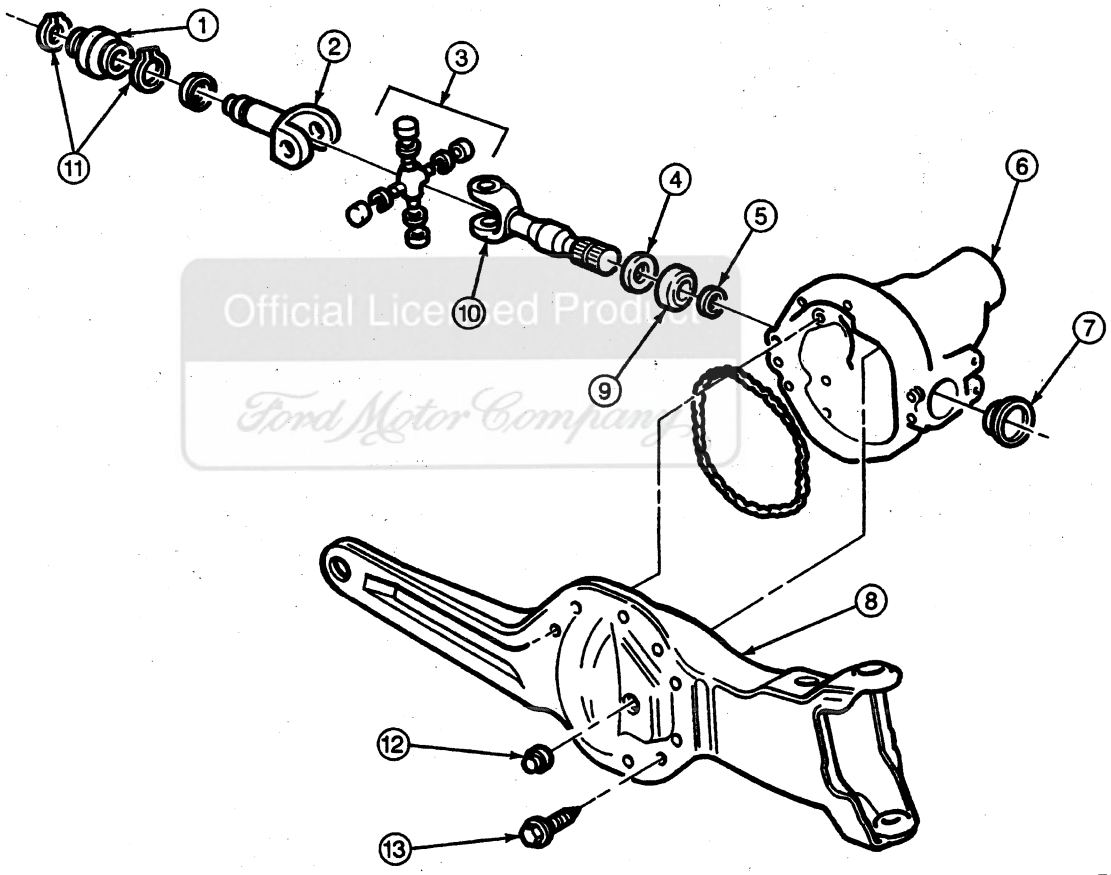

Official Licensed Product
Ford Motor Company

E7138-B

Item	Part Number	Description
1	3A429	Boot
2	3L387	Slip-Yoke
3	3249	Universal Joint
4	3C123	Seal
5	3167	C-Clip
6	3010	Carrier

(Continued)

Item	Part Number	Description
7	3254	Seal
8	3B403	Left Axle Arm
9	3254	Needle Bearing
10	3N387	Stub
11	3B478	Keystone Clamps
12	358035-S	Fill Plug
13	3C323	Bolt

REMOVAL AND INSTALLATION (Continued)

2. Remove both front wheel spindles (3105) and the left and right shaft and U-joint assemblies. Refer to Spindle, RH and LH Shaft and U-Joint Assembly in the Removal and Installation portion of this section.
3. Disconnect the vent tube and discard the hose clamps. Remove the vent fitting and install a 3-mm (1/8-inch) pipe plug.
4. NOTE: When performing the next step, position a drain pan under the carrier assembly to catch the lubricant when the carrier is separated from the arm.

   Support the carrier with a suitable jack and remove the bolts retaining the carrier to the support arm.
5. Separate the carrier from the support arm. Remove the carrier from the vehicle.
6. Place the carrier in Bench Mounted Holding Fixture T57L-500-B and Differential Housing Spreader Adapters T80T-4000-B.

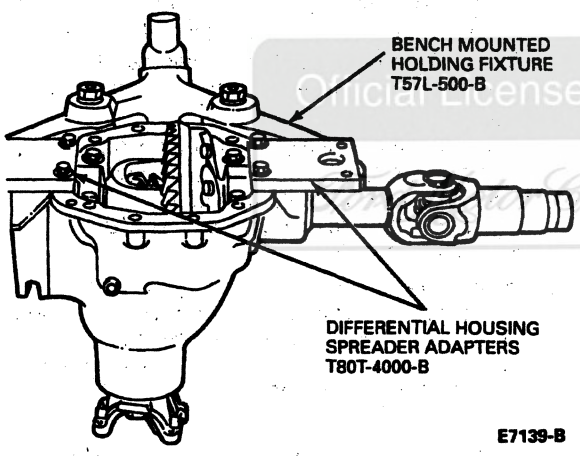

E7139-B

7. Rotate the slip yoke and shaft assembly so the open side of the snap ring is exposed as shown. Remove the snap ring from the shaft.

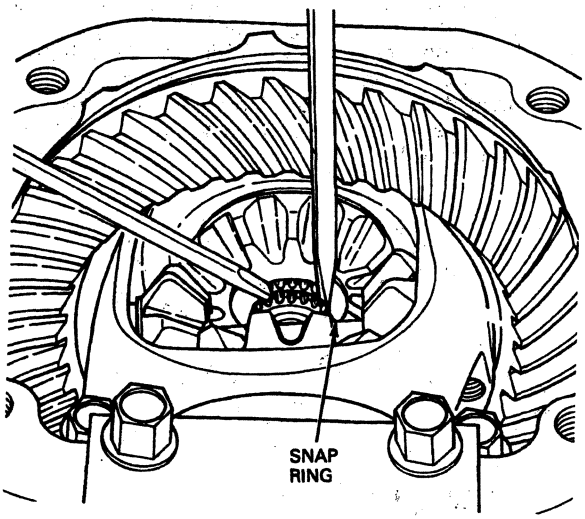

E5382-C

8. Remove the slip yoke and shaft assembly from the carrier.
9. Remove the oil seal and caged needle bearings at the same time, using Impact Slide Hammer T50T-100-A and Collet (part of Blind Hole Puller Set D80L-100-A or equivalent) as shown. Discard the seal and needle bearing.

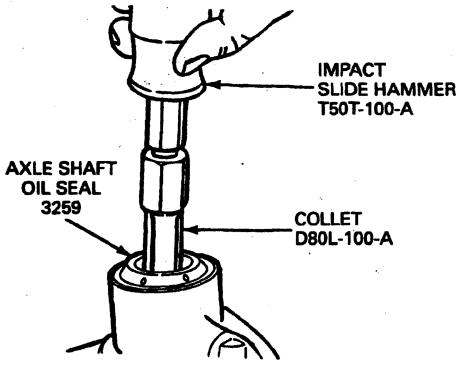

E5383-B

Official Licensed Product

REMOVAL AND INSTALLATION (Continued)

Installation

1. Make sure the bearing bore is free from nicks and burrs. Install a new caged needle bearing on Needle Bearing Replacer T83T-1244-A with the manufacturer name and part number facing outward toward the tool. Drive the needle bearing until it is seated in the bore using Driver Handle T80T-4000-W.

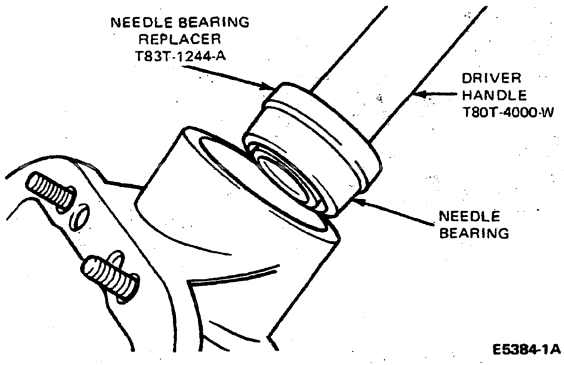

2. Coat the seal with High Temperature 4x4 Front Axle and Wheel Bearing Grease E8TZ-19590-A or equivalent meeting Ford specification ESA-M1C198-A. Drive the seal into the carrier using Needle Bearing Replacer T83T-1244-A.

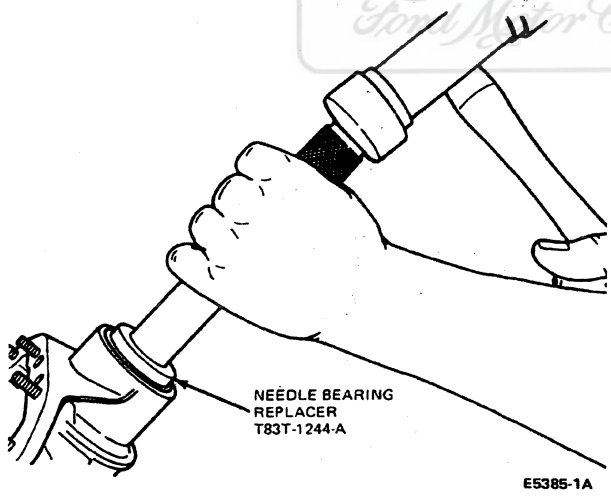

3. Install the slip yoke and shaft assembly into the carrier so the groove in the shaft is visible in the differential case.
4. NOTE: Do not tap on the center of the snap ring. This may damage the snap ring.

   Install the snap ring in the groove in the shaft. Force the snap ring into position with a screwdriver as shown. Remove the carrier from the holding fixture.

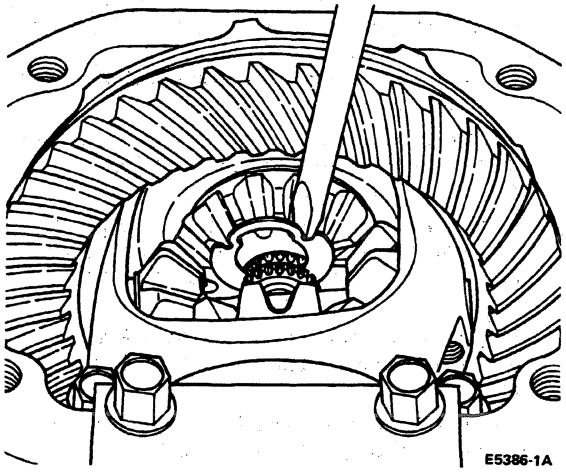

5. Clean all traces of gasket RTV sealant from the surfaces of the carrier and support arm and make sure the surfaces are free from dirt and oil.
6. NOTE: The bead should be continuous and should not pass through or outside the holes.

   NOTE: The carrier must be installed on the support arm within five minutes after applying the RTV sealant.

   Apply a bead of Silicone Rubber D6AZ-19562-AA (clear) or -BA (black) or equivalent meeting Ford specifications ESB-M4G92-A and ESE-M4G195-A, in a bead 3-6 mm (1/8-1/4 inch) high and wide.
7. Position the carrier on a suitable jack. Install carrier in position on the support arm using guide pins to align. Install the retaining bolts and hand-tighten. Tighten the bolts in a clockwise or counterclockwise pattern to 41-54 N·m (30-40 lb-ft).
8. Install support arm tab bolts to side of carrier. Tighten bolts to 115-135 N·m (85-100 lb-ft).
9. Install both front wheel spindles and the left and right shaft and joint assemblies as described in the removal and installation portion of this section.
10. Connect the driveshaft to the yoke. Install the nuts and U-bolts and tighten to 11-20 N·m (8-15 lb-ft).
11. Remove the 3-mm (1/8-inch) pipe plug and install the vent fitting. Connect the vent tube with new hose clamps.
12. Fill with 4x4 Gear Oil F1TZ-19580-A or equivalent meeting Ford specification WSL-M2C191-A. Refer to Specifications for capacities.

Licensed Product
Ford Motor Company

REMOVAL AND INSTALLATION (Continued)

Differential Seal, LH

SPECIAL SERVICE TOOL(S) REQUIRED

Description	Tool Number
Puller	T58-101-B
Differential Axle Seal Replacer	T80T-4000-H

Removal

1. Remove the front wheel spindle (3105) and left shaft assembly as described in this section.
2. Pull out the seal with Puller T58L-101-B. Remove and discard seal.

Installation

1. Lightly coat a new seal with High Temperature 4x4 Front Axle and Wheel Bearing Grease E8TZ-19590-A or equivalent meeting Ford specification ESA-M1C198-A.
2. Install seal on the Differential Axle Seal Replacer T80T-4000-H.
3. Slide the seal and tool into the carrier housing bore. Seat the seal with a nylon or rawhide hammer.
4. Install the front wheel spindle and left shaft assembly. Refer to Spindle, RH and LH Shaft and Joint Assembly in the Removal and Installation portion of this section.

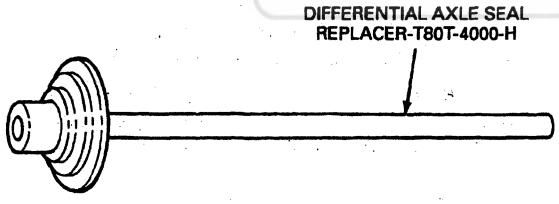

E4108-B

Axle Housing Pivot Bushing

SPECIAL SERVICE TOOL(S) REQUIRED

Description	Tool Number
Front Suspension Bushing Tool	T80T-5638-A
Includes:	
Pivot Bushing Remover	T80T-5638-A1
Pivot Bushing Replacer	T80T-5638-A2
Suspension Bushing Service Set	T78P-5638-A
Includes:	
Forcing Screw	T78P-5638-A1
Receiver Cup	T78P-5638-A2
Receiver Cup	T78P-5638-A3

Removal

1. Remove axle.
2. Install Suspension Bushing Service Set T78P-5638-A, Pivot Bushing Remover T80T-5638-A1 (part of Front Suspension Bushing Tool T80T-5638-A) and Receiver Cup T78P-5638-A3 (part of Suspension Bushing Service Set T78P-5638-A) onto the pivot bushing. Turn the forcing screw and remove the pivot bushing.

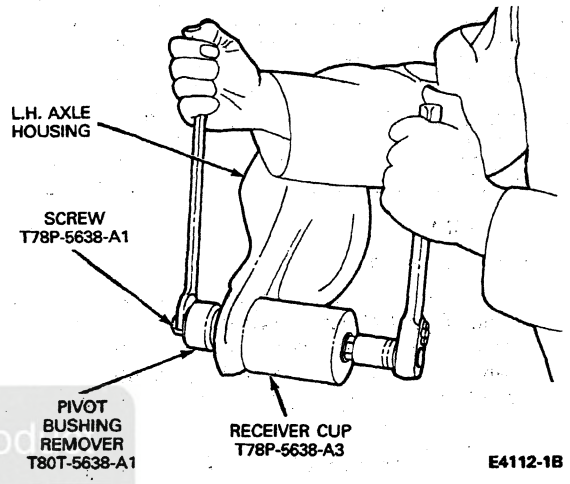

E4112-1B

Installation

1. Place pivot bushing in axle housing. Install Receiver Cup T78P-5638-A2 and Forcing Screw T78P-5638-A1 (part of Suspension Bushing Service Set T78P-5638-A) and Bushing Replacer T80T-5638-A2 (part of Front Suspension Bushing Tool T80T-5638-A) into housing and install bushing.
2. Install the axle.

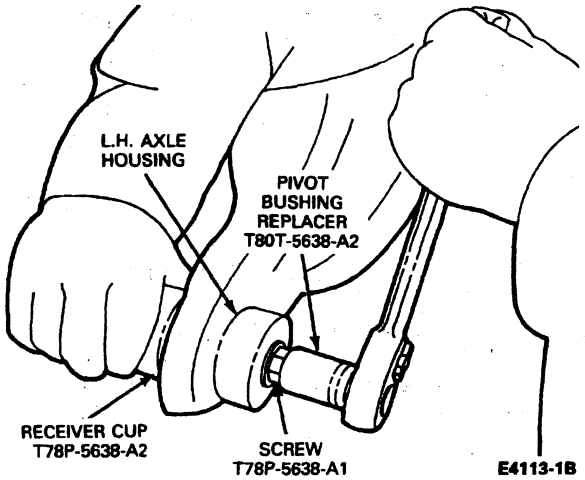

E4113-1B

Ford Motor Company

DISASSEMBLY AND ASSEMBLY

Cardan-Type U-Joints

Refer to Section 05-01.

Carrier

SPECIAL SERVICE TOOL(S) REQUIRED

Description	Tool Number
Differential Housing Spreader Adapters	T80T-4000-B
Companion Flange Holding Tool	T57T-4851-B
Companion Flange Remover	T65L-4851-A
Bearing Cup Puller	T77F-1102-A
Impact Slide Hammer	T50T-100-A

Disassembly

1. Remove carrier.
2. Place the carrier in a holding fixture, remove and clean all gasket surfaces and remove the bearing caps. Note the matched numbers or letters stamped on the cap and carrier. These numbers or letters must be matched upon assembly.

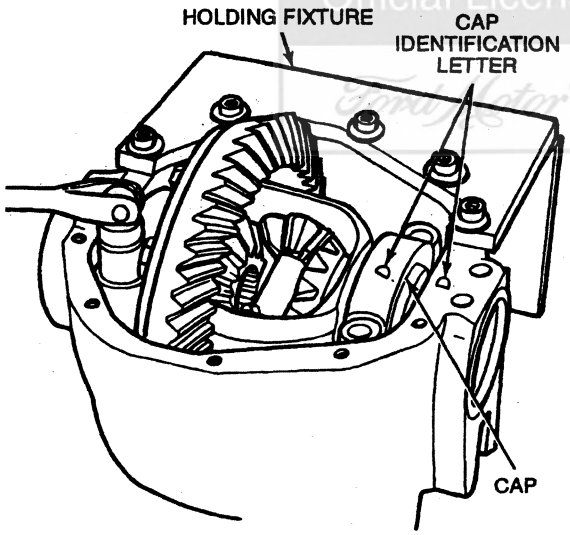

DE0289-A

3. **CAUTION: Do not spread the carrier over 0.25 mm (0.010 inch).**

   Mount Differential Housing Spreader TOOL-4000-E or equivalent and Differential Housing Spreader Adapters T80T-4000-B on carrier. Place Dial Indicator / Magnetic Base D78P-4201-B or equivalent on the carrier and spread the housing.

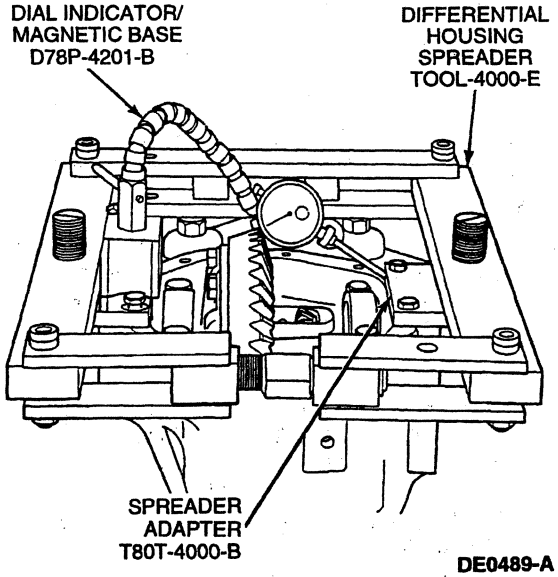

DE0489-A

4. Remove the differential case from the carrier. It might be necessary to pry the differential case from the carrier with pry bars. Use caution to avoid damaging any machined surfaces. Remove and tag differential bearing cups (4222) to indicate from which side of the carrier they were removed. Remove the spreader tool.
5. Turn the nose of the carrier up. Hold the end yoke with Companion Flange Holding Tool T57T-4851-B and remove the pinion nut and washer from the differential pinion shaft (4211).
6. Remove the end yoke with Companion Flange Remover T65L-4851-B. If the yoke shows any signs of wear in the area of seal contact, replace the yoke.
7. **CAUTION: Be careful not to damage the pinion bearing preload shims located on the splined end of the pinion. If damaged, replace with shims of equal thickness. Do not lose the shims.**

   Remove the drive pinion by tapping on the drive pinion shaft with a rawhide or nylon hammer. Catch the pinion to prevent damage to the pinion.
8. Remove the pinion seal from the carrier bore by using Bearing Cup Puller T77F-1102-A and Impact Slide Hammer T50T-100-A. Replace the pinion seal with a new one during assembly.
9. Remove the outer pinion bearing and the oil slinger from the carrier input bore.
10. Remove the pinion bearing preload shims. Remove all shims from the carrier. Replace any damaged shims during assembly. Shims are available in thicknesses of 0.08, 0.13, 0.25 and 0.76 mm (0.003, 0.005, 0.010 and 0.030 inch).

Official Licensed Product Ford Motor Company

DISASSEMBLY AND ASSEMBLY (Continued)

11. Remove the inner pinion bearing cup and baffle using Pinion Bearing Cup Remover Set D81T-4628-D and Driver Handle D81L-4000-A or equivalents. Drive the bearing cup out of the bore.

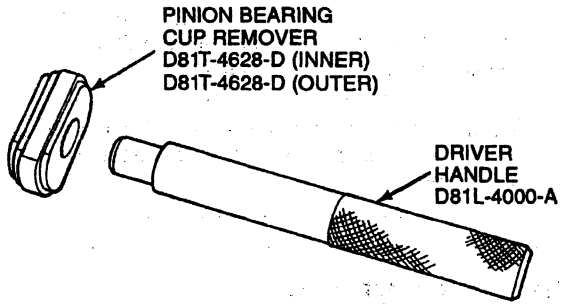

DE0176-A

12. Turn the nose of the carrier down and remove the outer pinion bearing cup. Drive the cup from the carrier using Pinion Bearing Cup Remover D81T-4628-D and Driver Handle D81L-4000-A or equivalents.
13. Remove the differential case bearings and shims from the case. Place Step Plate D80L-630-5 or equivalent under bearing to protect the bearing. Install Pinion and Carrier Bearing Remover D81L-4220-A or equivalent and remove the bearing as shown. Turn the case over and remove the other bearing.

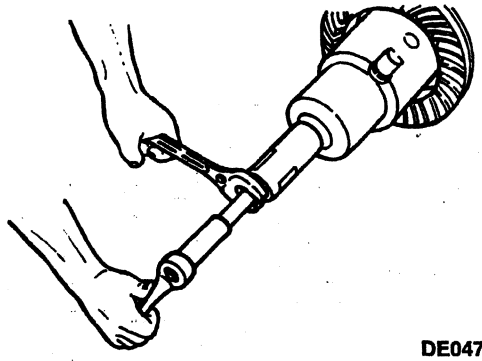

DE0479-A

14. Wire the shims, bearing cup and cone together and identify from which side of the case they were removed. If any shims are damaged, replace with new shims upon assembly.
15. NOTE: Whenever removing the bolts of the differential ring gear, discard the bolts and replace with new bolts upon assembly.

    Place a few shop towels over the vise to prevent the ring gear teeth from being nicked after it is free from the case. Place the case in a vise. Remove the ring gear bolts. Tap the ring gear with a rawhide hammer to free it from the case. Remove the case and differential ring gear and pinion from the vise.
16. NOTE: Shim / slinger is located between the pinion gear head and the differential pinion bearing (4630). Be careful not to damage the shim / slinger when removing the bearing cone. If the shim / slinger is damaged, measure the thickness and replace with shim / slinger of equal thickness. Refer to the following chart.

    Remove the bearing and selective shims from the drive pinion with Pinion and Carrier Bearing Remover D81L-4220-A or equivalent.

SELECTIVE SHIM SIZES

mm	Inches
1.35	0.053
1.40	0.055
1.45	0.057
1.50	0.059
1.55	0.061
1.60	0.063
1.65	0.065
1.70	0.067
1.75	0.069
1.80	0.071
1.85	0.073

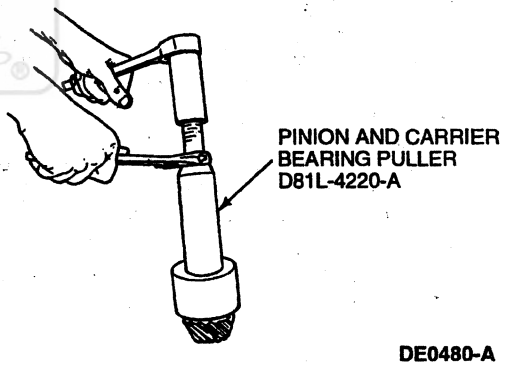

DE0480-A

17. Inspect all parts for damage and replace as required.

Total Differential Case End Play

Assembly

1. Attach the differential ring gear to the differential case using new bolts. Tighten bolts alternately and evenly to 129-142 N·m (95-105 lb-ft).

DISASSEMBLY AND ASSEMBLY (Continued)

2 Clean the trunnions on the differential and install Dummy Differential Bearings D81T-4222-C or equivalent onto the differential case Remove all burrs and nicks from hubs so master bearings rotate freely

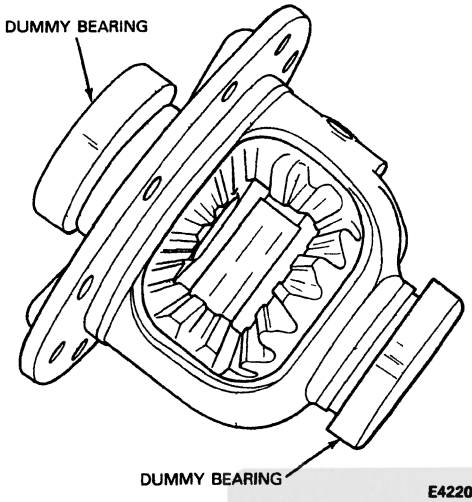

3 NOTE Dial indicator should have a minimum travel capability of 5 08 mm (0 200 inch)

Place the differential case into carrier (without pinion) The differential case should move freely in the carrier Mount Dial Indicator / Magnetic Base D78P-4201-B or Dial Indicator with Bracketry TOOL-4201-C or equivalent against the differential case flange as shown Use Dial Indicator with Clutch Housing Alignment Adapter T75L-4201-A Locate the tip of the indicator on the flat surface of one ring gear bolt

4 Force the differential case toward the dial indicator as far as possible and zero the dial indicator with force still applied

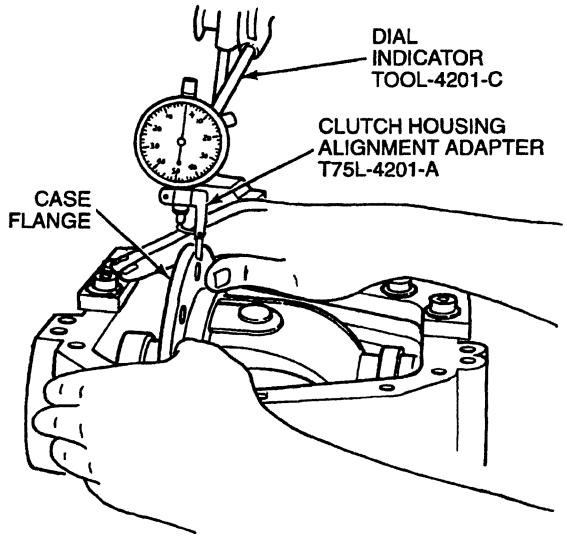

5 NOTE' The reading obtained in this step indicates the amount of shims needed behind the differential side bearings to take up total clearance between the differential bearing and differential case This reading will be used under Gear Tooth Contact Pattern Check in this section

Force the differential case away from the dial indicator as far as it will go Repeat this procedure until the same reading is obtained Record the dial indicator reading

6 Remove the differential case from the carrier Do not remove the dummy differential bearings at this time

Drive Pinion Installation

Two separate adjustments affect tooth contact of the drive pinion and ring gear

- pinion depth (location)
- backlash

The pinion locating shim is installed between the differential pinion bearing (4630) and the head of the pinion gear

This shim pack and inner oil slinger and oil baffle control the position of the pinion

- Increasing shim thickness moves the pinion toward the ring gear
- Decreasing shim thickness moves the pinion away from the ring gear

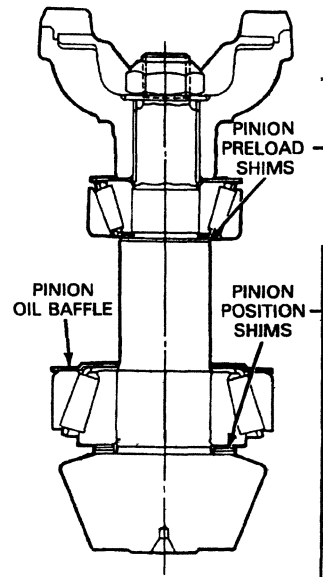

IN	MM
003	(08)
005	(13)
010	(25)
030	(76)

IN	MM
053	1 35
055	1 40
057	1 45
059	1 50
061	1 55
063	1 60
065	1 65
067	1 70
069	1 75
071	1 80
073	1 85

DISASSEMBLY AND ASSEMBLY (Continued)

Differential ring gear and pinions are supplied in matched sets with standard or metric markings.

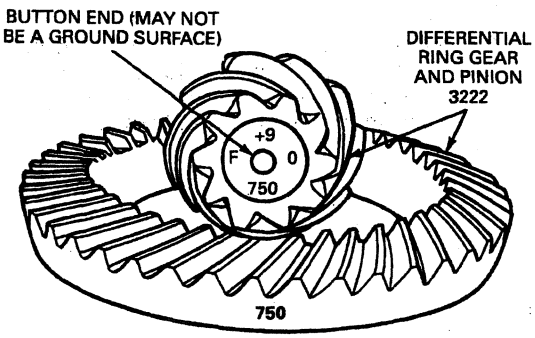

STANDARD PINION E7117-E

On the face of each drive pinion is marked a plus figure (+), a minus figure (-) or a zero (0). These figures indicate the position for each gearset. The position is determined by the amount of drive pinion shims between the pinion bearing cup and carrier bearing bore, or if selective shim is used, between the inner pinion bearing cone and pinion gear head. Refer to the following charts.

Old Pinion Marking	New Pinion Marking (English)								
	-4	-3	-2	-1	0	+1	+2	+3	+4
+4	+0.008	+0.007	+0.006	+0.005	+0.004	+0.003	+0.002	+0.001	0
+3	+0.007	+0.006	+0.005	+0.004	+0.003	+0.002	+0.001	0	-0.001
+2	+0.006	+0.005	+0.004	+0.003	+0.002	+0.001	0	-0.001	-0.002
+1	+0.005	+0.004	+0.003	+0.002	+0.001	0	-0.001	-0.002	-0.003
0	+0.004	+0.003	+0.002	+0.001	0	-0.001	-0.002	-0.003	-0.004
-1	+0.003	+0.002	+0.001	0	-0.001	-0.002	-0.003	-0.004	-0.005
-2	+0.002	+0.001	0	-0.001	-0.002	-0.003	-0.004	-0.005	-0.006
-3	+0.001	0	-0.001	-0.002	-0.003	-0.004	-0.005	-0.006	-0.007
-4	0	-0.001	-0.002	-0.003	-0.004	-0.005	-0.006	-0.007	-0.008

Old Pinion Marking	New Pinion Marking (Metric)								
	-10	-8	-5	-3	0	+3	+5	+8	+10
+10	+0.20	+0.18	+0.15	+0.13	+0.10	+0.08	+0.05	+0.03	0
+8	+0.18	+0.15	+0.13	+0.10	+0.08	+0.05	+0.03	0	-0.03
+5	+0.15	+0.13	+0.10	+0.08	+0.05	+0.03	0	-0.03	-0.05
+3	+0.13	+0.10	+0.08	+0.05	+0.03	0	-0.03	-0.05	-0.08
0	+0.10	+0.08	+0.05	+0.03	0	-0.03	-0.05	-0.08	-0.10
-3	+0.08	+0.05	+0.03	0	-0.03	-0.05	-0.08	-0.10	-0.13
-5	+0.05	+0.03	0	-0.03	-0.05	-0.08	-0.10	-0.13	-0.15
-8	+0.03	0	-0.03	-0.05	-0.08	-0.10	-0.13	-0.15	-0.18
-10	0	-0.03	-0.05	-0.08	-0.10	-0.13	-0.15	-0.18	-0.20

If the old ring and pinion shim pack is used, measure the slinger and baffle and each shim separately, and add each shim measurement to total the original measurement. Replace the old shims with new shims that equal this measurement.

If a new ring gear and drive pinion is being installed, note the plus (+), minus (-) or zero (0) marking on the button of the pinion. Refer to the charts. Add or subtract shims, according to the chart to compensate for differences between the old and new pinion.

For example, if a new pinion is marked "positive" +3 (+8 metric) and an old pinion is marked "0," then 0.008 mm (0.003 inch) less shim pack thickness is required between the inner differential pinion bearing and the pinion head.

A new ring gear and drive pinion is always installed as a matched set and never separately. Make sure the same matching number appears on both the drive pinion and ring gear.

DISASSEMBLY AND ASSEMBLY (Continued)

Install the correct shim pack of the drive pinion and place the pinion in the carrier. Check pinion depth.

Depth Gauge Check

SPECIAL SERVICE TOOL(S) REQUIRED

Description	Tool Number
Threaded Drawbar	T75T-1176-A
Pinion Bearing Cup Replacer	T80T-4000-E
Pinion Bearing Cup Replacer	T80T-4000-F
Truck Pinion Depth Gauge	T80T-4020-A
Pinion Bearing Cone Replacer	T53T-4621-B
Axle Bearing/Seal Plate	T75L-1165-B

1. Install inner and outer differential drive pinion bearing cups with Threaded Drawbar T75T-1176-A and Pinion Bearing Cup Replacers T80T-4000-F (inner) and T80T-4000-E (outer).

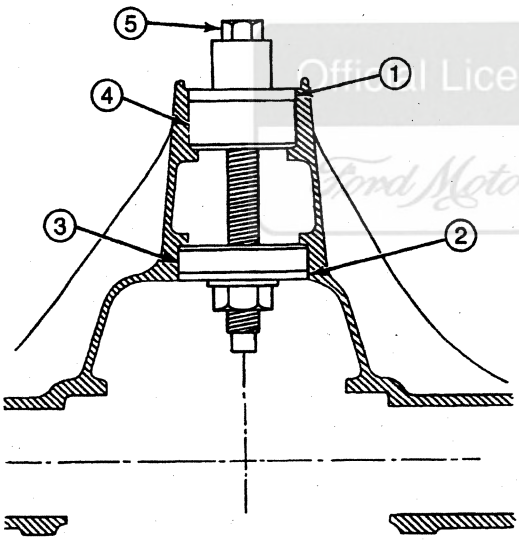

DE0173-A

Item	Part Number	Description
1	T80T-4000-E	Pinion Bearing Cup Replacer (Outer)
2	T80T-4000-F	Pinion Bearing Cup Replacer (Inner)
3	4628	Rear Axle Pinion Bearing Cup, Inner
4	4616	Differential Drive Pinion Bearing Cup, Outer
5	T75T-1176-A	Threaded Drawbar

2. NOTE: If any of the gauge surfaces become nicked, the high spots must be removed with a medium India oilstone to eliminate erroneous readings.

   Place a new differential pinion bearing (4630) over the proper aligning adapter and insert into the pinion bearing retainer assembly. Refer to the illustration for correct tools for the particular axles.

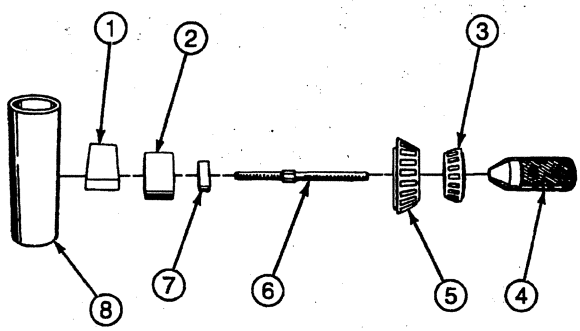

E6653-C

Item	Part Number	Description
1	T80T-4020-F42	Gauge Block (Part of T80T-4020-A)
2	T80T-4020-F40	Gauge Disc (Part of T80T-4020-A)
3	4621	Differential Pinion Bearing
4	T76P-4020-A11	Handle (Part of T80P-4020-A)
5	4630	Differential Pinion Bearing
6	T80T-4020-F43	Screw (Part of T80T-4020-A)
7	T75P-4020-A2	Aligning Adapter
8	T80T-4020-F41	Gauge Tube (Part of T80T-4020-A)

3. Place the front differential pinion bearing (4621) (new or used if in good condition) into the differential drive pinion bearing cup (4616) in the carrier and assemble the handle onto the screw and hand-tighten.

   Note the 3/8-inch square drive in the handle to be used for obtaining the proper differential pinion bearing preload.

4. Center the proper gauge tube into the differential pinion bearing bore. Install the bearing caps and tighten to proper specifications listed at the end of this section. To preload the differential pinion bearing, tighten the handle to 2.3-3.4 N·m (20-30 lb-in).

Official Licensed Product Ford Motor Company

DISASSEMBLY AND ASSEMBLY (Continued)

5. NOTE: The feeler gauge fit between the gauge tube and the gauge block should be a slight drag-type feeling.

   Using a feeler gauge tool or shims, select the thickest feeler shim that will enter between the gauge tube and the gauge block. Insert the feeler gauge or shims directly along the gauge block to make sure reading is correct.

6. NOTE: If the service pinion gear is marked with a plus (+) reading, this amount must be subtracted from the thickness dimension obtained in Step 6. For example: +2 (-0.002).

   NOTE: If the service pinion gear is marked with a minus (-) reading, this amount must be added to the thickness dimension obtained in Step 6. For example: -2 (+0.002).

   After the correct shims or feeler gauge feel is obtained, check the reading and this is the thickness of shim required providing that upon inspection of the service pinion gear, the button is etched "0."

   In addition, use the exact same new differential pinion bearing used in the previous steps.

7. Measure shims with a micrometer to verify the shim size. Place the correct size selective shim on the pinion and press on the differential pinion bearing. Use Pinion Bearing Cone Replacer T53T-4621-B and Axle Bearing/Seal Plate T75L-1165-B as shown.

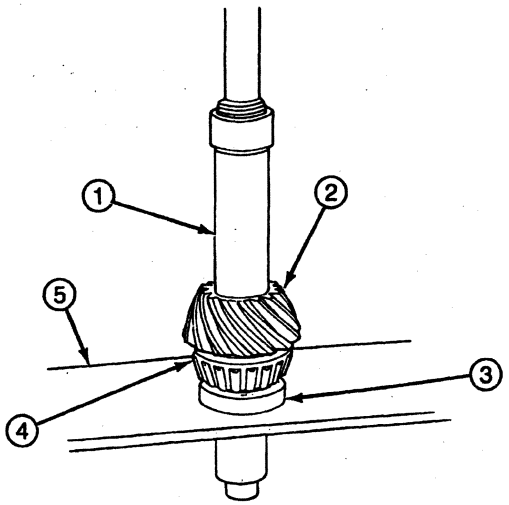

E9949-A

Item	Part Number	Description
1	—	Press
2	—	Drive Pinion (Part of 3222)
3	T53T-4621-B	Pinion Bearing Cone Replacer
4	4630	Differential Pinion Bearing
5	T75L-1165-B	Axle Bearing Seal Plate

(Continued)

8. Continue to build the remaining components with proper pinion and differential bearing preload torques and ring gear backlash.

Bearing Cup and Drive Pinion Installation

SPECIAL SERVICE TOOL(S) REQUIRED

Description	Tool Number
Pinion Bearing Cup Replacer	T80T-4000-F
Threaded Drawbar	T75T-1176-A
Pinion Bearing Cup Replacer	T80T-4000-E
Pinion Bearing Cone Replacer	T53T-4621-B
Axle Bearing/Seal Plate	T75L-1165-B

1. Clean the bore. If installed, remove the differential drive pinion bearing cup (4616).
2. NOTE: Be careful not to misalign the rear axle pinion bearing cup (4628).

   Place the oil baffle first and the required amount of shims in the bore of the differential pinion bearing (4630). Drive the rear axle pinion bearing cup in place with Inner Pinion Bearing Cup Replacer T80T-4000-F and Threaded Drawbar T75T-1176-A.
3. Place the differential drive pinion bearing cup into the carrier and drive in place with Outer Pinion Bearing Cup Replacer T80T-4000-E. Install Threaded Drawbar T75T-1176-A and draw the cups into the bore.
4. Lubricate the ends of outer differential pinion bearing rollers with Premium Long-Life Grease XG-1-C or -K or equivalent meeting Ford specification ESA-M1C75-B. Install the outer differential pinion bearing (4621) in place in outer differential drive pinion bearing cup.
5. Install the inner differential pinion bearing and pinion position shim on the pinion. Drive the differential pinion bearing on the drive pinion shaft until fully seated using Pinion Bearing Cone Replacer T53T-4621-B and Axle Bearing/Seal Plate T75L-1165-B.

Drive Pinion Preload Check

SPECIAL SERVICE TOOL(S) REQUIRED

Description	Tool Number
Companion Flange Replacer	T83T-4851-A
Companion Flange Holding Tool	T78P-4851-A

Ford Motor Company Licensed Product

DISASSEMBLY AND ASSEMBLY (Continued)

1. Measure original preload shims and replace with new shims of equal size.
2. Install the pinion into the carrier.
3. Install new preload shims over the pinion. Install the outer differential drive pinion bearing cup (4616) and oil slinger and seal.
4. Assemble end yoke, washer and deflector on drive pinion shaft, and align with Companion Flange Replacer T83T-4851-A and Companion Flange Holding Tool T78P-4851-A to seat the yoke. Install an old pinion nut and tighten to 272-298 N·m (200-220 lb-ft).

   Use the old pinion nut until preload is verified. If rotating torque is within specification, then install the new pinion nut and tighten to specification.

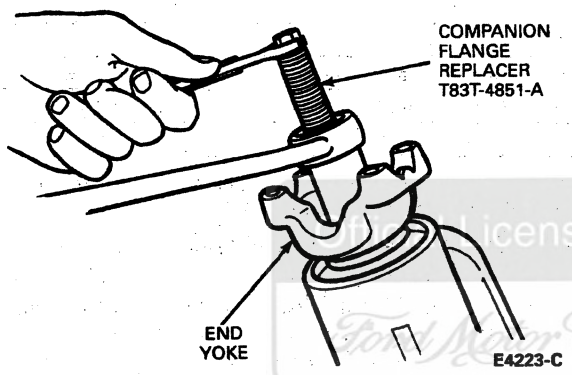

5. Rotate pinion nut with a torque wrench. Rotating torque should be 2.26-3.40 N·m (20-30 lb-in). To increase preload, remove shims. To decrease preload, add shims.
6. Install the yoke with Companion Flange Replacer T83T-4851-A. Install washer and nut, and tighten nut to 244-271 N·m (180-200 lb-ft).

Differential Case

Disassembly

1. Place case in vise and drive out roll pin retaining the differential pinion shaft (4211) to case.

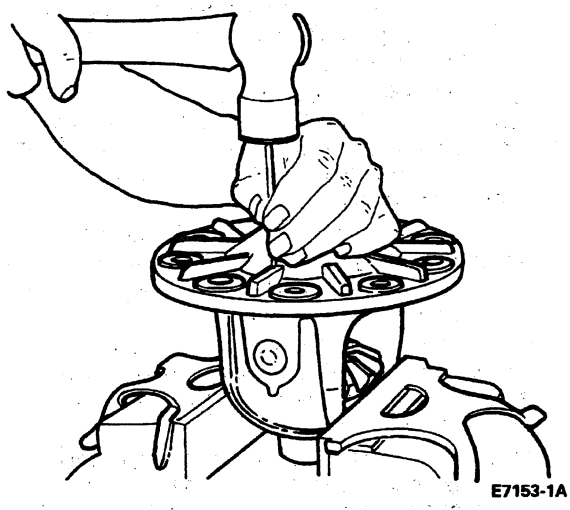

2. Remove differential pinion shaft with a drift.

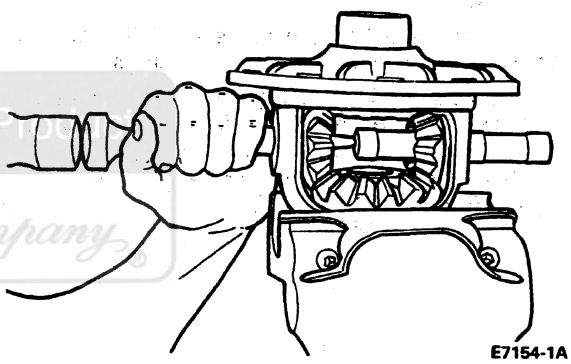

3. Rotate the differential pinion gears (4215) and differential side gears (4236) until the differential pinion gears turn to the windows of the case. Remove differential pinion gears and differential pinion thrust washers (4230).
4. Lift differential side gears and differential side gear thrust washers (4228) from case.

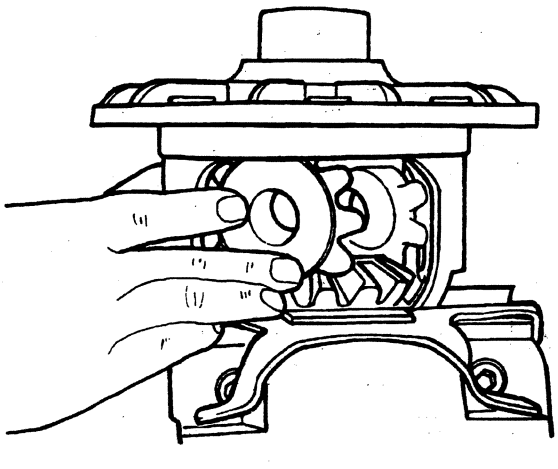

Ford Motor Company Licensed Production

DISASSEMBLY AND ASSEMBLY (Continued)

Assembly

1. Inspect differential case parts for signs of wear. If wear exists on all parts, replace the entire differential. If one gear shows signs of wear, replace both differential pinion gears and differential side gears as a set.
2. Apply High Temperature 4x4 Front Axle and Wheel Bearing Grease E8TZ-19590-A or equivalent meeting Ford specification ESA-M1C198-A to differential side gear thrust washers, hub and thrust face of differential side gears. Lubricate differential pinion gears and differential pinion thrust washers with High Temperature 4x4 Front Axle and Wheel Bearing Grease E8TZ-19590-A or equivalent meeting Ford specification ESA-M1C198-A.
3. Hold differential side gears in place in case with one hand and install differential pinion gears and differential pinion thrust washers with other hand. Rotate the differential side gears and differential pinion gears until the holes in the differential pinion thrust washers and differential pinion gears line up exactly with the holes in the case.
4. Insert the differential pinion shaft in the case. Make sure the hole for the pinion roll pin in the differential pinion shaft lines up with the holes for the roll pin in the case.
5. Insert roll pin. Peen some of the case metal over the roll pin to lock in two places 180 degrees apart. Note the location of the slot in the roll pin. Peen 90 degrees from slot. Turn the differential gears less than 3.4 N·m (30 lb-in).

Differential Case Assembly to Carrier

SPECIAL SERVICE TOOL(S) REQUIRED

Description	Tool Number
Differential Side Bearing Replacer	T80T-4000-J
Pinion Bearing Cone Replacer	T53T-4621-B
Differential Housing Spreader Adapters	T80T-4000-B

Pinion and Ring Gear Backlash

1. Assemble ring gear to case. Use new Grade 9 bolts. Tighten bolts alternately and evenly to 129-142 N·m (95-105 lb-ft).
2. Place the case into position in the carrier. Master bearings should still be installed.
3. Force the case away from the drive pinion gear until it is completely seated against the cross bore face of the carrier. Position Dial Indicator / Magnetic Base D78P-4201-B or Dial Indicator with Bracketry TOOL-4201-C or equivalent so the indicator tip rests on a bolt of the case. Zero the dial indicator. Use dial indicator with Clutch Housing Alignment Adapter T75L-4201-A.

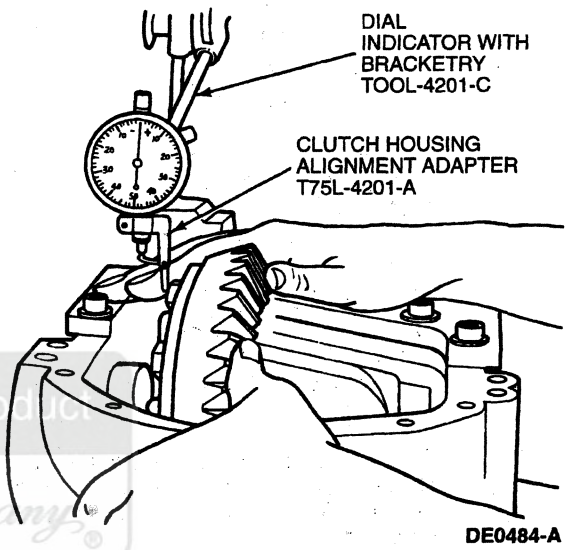

4. Force ring gear against drive pinion gear. Rock ring gear slightly to make sure gear teeth are in contact. Then, force ring gear away from drive pinion gear, making sure the dial indicator returns to zero. Repeat this procedure until the dial indicator reading is the same.

   This reading reveals the amount of shims necessary between the case and differential bearing (4221) on the ring gear side.
5. Remove the case from the housing. Remove the master bearings from the case.
6. As determined in Step 4, place the required amount of differential bearing shims (4067) on the ring gear hub of the case. For example, if the reading in Step 4 was 1.140 mm (0.045 inch), place 1.140 mm (0.045 inch) of differential bearing shims on the hub of the ring gear side of the differential case.

DISASSEMBLY AND ASSEMBLY (Continued)

7. Install the differential bearing on the hub of the ring gear side of the case. Drive the differential bearing onto the hub using Differential Side Bearing Replacer T80T-4000-J.

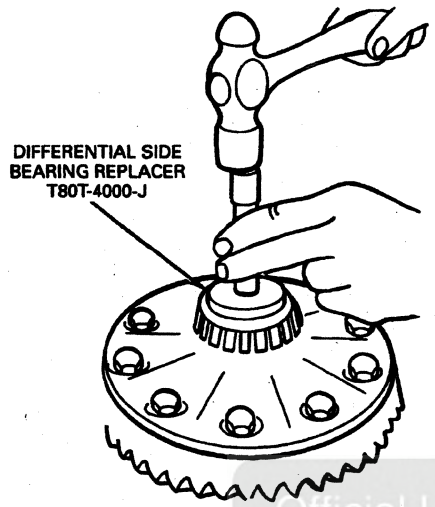

8. To determine the correct amount of differential bearing shims to be placed on the hub of the drive pinion side of the differential case, subtract the reading obtained in Step 4 from the Total Differential Case End Play. Total case end play was determined in Steps 3 through 5 of Total Differential Case End Play. When this amount is determined, add 0.26 mm (0.010 inch) to the amount. This is the required amount of differential bearing shims to be placed on the hub of the drive pinion side of the differential case.

   For example, total case end play was 2.30 mm (0.091 inch). The reading in step 4 was 1.14 mm (0.045 inch), and when subtracted from 2.30 mm (0.091 inch) gives 1.16 mm (0.046 inch), 0.26 mm (0.010 inch) is added to give 1.42 mm (0.056 inch) amount of differential bearing shims to be placed on the hub of the drive pinion side of the differential case.
9. Place the required amount of shims on the hub of the drive pinion side of the differential case.
10. Install the differential bearing on the hub of the drive pinion side of the case. Place Step Plate D80L-630-5 or equivalent on the ring gear side bearing to protect the differential bearing.
11. Drive the differential bearing onto the hub of the drive pinion side of the differential case using Differential Side Bearing Replacer T80T-4000-J. Place the Pinion Bearing Cone Replacer T53T-4621-B on the ring gear differential bearing to prevent damage.
12. Install the differential bearing cups (4222) on the differential bearings.
13. **CAUTION: When performing the next step, do not exceed 0.25 mm (0.01 inch).**

    With the Differential Housing Spreader TOOL-4000-E, Differential Housing Spreader Adapter T80T-4000-B Clutch Housing Alignment Adapter T75L-4201-A and Dial Indicator with Bracketry TOOL-4201-C or equivalent installed on the differential case, spread the carrier housing (not more than 0.25 mm [0.01 inch]).
14. NOTE: Be careful to not nick the teeth of the ring gear or pinion.

    Install the differential case in the carrier. If necessary use a rawhide or plastic hammer to seat the case into the carrier housing cross bore. With partial and non-hunting / partial ring gear and pinion sets, align the marks on the ring gear and drive pinion if required.
15. Remove the spreader and dial indicator from the differential case.
16. Install bearing caps and bolts. Make sure the letters stamped on the caps correspond in both position and direction with the letters stamped into the carrier. Tighten bolts to 108-122 N·m (80-90 lb-ft).
17. Rotate the pinion and differential assembly several revolutions to seat differential bearings.
18. Install Dial Indicator with Bracketry TOOL-4201-C or equivalent on the case. Use dial indicator with Clutch Housing Alignment Adapter T75L-4201-A. Check ring gear and pinion backlash at three equally spaced points on the ring gear. Backlash tolerance is 0.13-0.23 mm (0.005-0.009 inch) and cannot vary more than 0.08 mm (0.003 inch) between the three points.

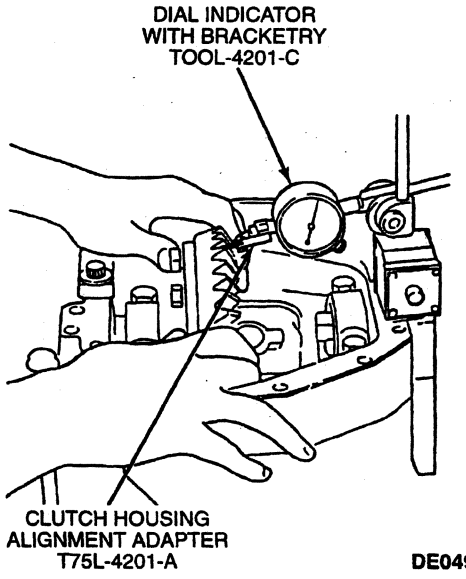

DISASSEMBLY AND ASSEMBLY (Continued)

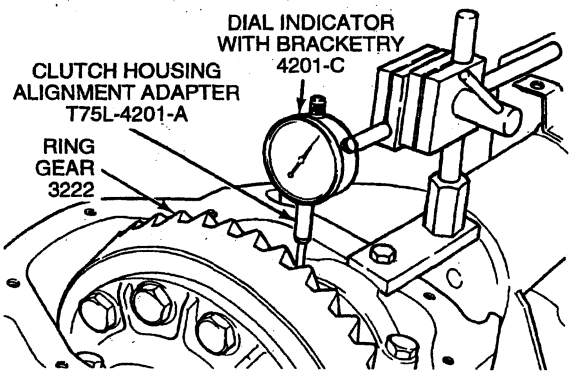

DE0485-A

19. Obtain a gear tooth contact pattern check.
20. NOTE: Clean, oil free surfaces are required for proper curing and sealing.

    Apply a bead 3.175-6.35 mm (1/8-1/4 inch) high and wide of Silicone Rubber Sealant D6AZ-19562-AA (clear) or -BA (black) or equivalent meeting Ford specifications ESB-M4G92-A and ESE-M4G195-A on the mating surfaces of the carrier mounting face support arm.

    Allow one hour curing time after the axle carrier is assembled to the axle arm before installing lubricant and operating vehicle.

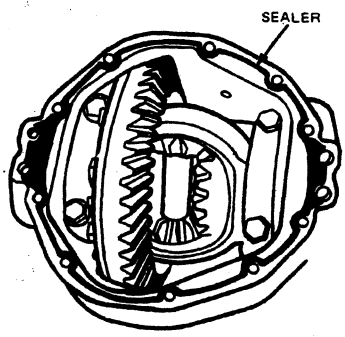

E4225-1A

21. Mount the differential to the left-hand axle arm using two guide pins, being careful not to smear gasket sealant. Install and tighten bolts to 41-54 N·m (30-40 lb-ft).
22. Use new bolts with encapsulated adhesive or wire brush the old bolts and apply thread-locking compound Threadlock® and Sealer EOAZ-19554-AA or equivalent meeting Ford specification WSK-M2G315-A5 (Type II).
23. Install support arm tab bolts to side of carrier and tighten to 115-135 N·m (85-100 lb-ft).

Gear Tooth Contact Pattern Check

Refer to Section 05-00.

SPECIFICATIONS

DANA AXLE ADJUSTMENTS

Description	Specification
Drive Pinion Preload	2.25-3.4 N·m (20-30 Lb-In)
Ring Gear Backlash	0.13-0.23 mm (0.005-0.009 Inch). No More than 0.08 mm (0.003 Inch) Variation in Any Three Places.
Differential Gear — Torque-to-Turn	Less than 3.4 N·m (30 Lb-In)

LUBRICANT/ADHESIVE/CLEANER SPECIFICATIONS

Description	Part Number	Ford Specification
High Temperature 4x4 Front Axle and Wheel Bearing Grease	E8TZ-19590-A	ESA-M1C198-A
Silicone Rubber	D6AZ-19562-AA (Clear) D6AZ-19562-BA (Black)	ESB-M4G92-A and ESE-M4G195-A
Premium Long-Life Grease	XG-1-C or -K	ESA-M1C75-B
Threadlock® and Sealer	EOAZ-19554-AA	WSK-M2G315-A5 (Type II)
4x4 Gear Oil	F1TZ-19580-A	WSL-M2C191-A

LUBRICANT CAPACITY

Approximate Capacity		
Liters	U.S. Pints	Imperial Pints
1.8	3.8	3.2

NOTE: Use 4x4 Gear Oil F1TZ-19580-A or equivalent meeting Ford specification WSL-M2C191-A.

TORQUE SPECIFICATIONS

Description	N·m	Lb-Ft	Lb-In
End Yoke Nut	244-271	180-200	—
Bearing Cap Bolts	108-122	80-90	—
Differential Retaining Bolts	41-54	30-40	—
Ring Gear Bolts (Grade 9)	129-142	95-105	—
Support Arm Tabs to Carrier Bolts	115-135	85-100	—
Driveshaft to Yoke Nuts and U-Bolts	11-20	8-15	—
Shock Absorber Mounting Plate U-Bolts	113-153	83-113	—
Top Ball Joint Stud Nut[a]	136 N·m	100	—
Bottom Ball Joint Stud Nut[a]	123-149	91-110	

(Continued)

SPECIFICATIONS (Continued)

TORQUE SPECIFICATIONS (Cont'd)

Description	N·m	Lb-Ft	Lb-In
Spindle to Steering Knuckle Nuts (Both Sides)	68-81	50-60	—
Front Axle Bearing and Pivot Bracket to Crossmember Nuts	88-118	65-87	—
Radius Arm to Axle Lower Bolt	435-461	320-340	—
Radius Arm to Axle Upper Stud	325-351	240-259	—
Wheel Bearing Retainer Nut (Automatic Locking Hub)	1.8 [b]	—	16 [b]
Wheel Bearing Lock Nut — Inner (Manual Locking Hub)	68 [c]	50 [c]	—
Wheel Bearing Lock Nut — Outer (Manual Locking Hub)	217-278	160-205	—
Locking Hub Cap — Capscrew	4-6	—	35-53
Axle Assembly to Crossmember Pivot Bolt	149-201	110-148	—
Lower Shock Bracket (Front) Bolts	34-46	25-34	—
Radius Arm Bracket (Front) Bolts	26-34	19-25	—
Spring Insulator Sleeve Nut	170-230	125-170	—
Radius Arm Bracket (Rear) Nuts	76-104	56-77	—
Front Shock Lower Mounting Nut	60-80	44-59	—
Front Axle Bumper Bracket Nut	77-103	57-80	—
Front Shock Upper Mounting Nut	60-80	44-59	—
Front Spring Mounting Bracket Nuts	47-78	35-60	—

a Requires specific tightening sequence for proper installation. Refer to Steering Knuckle in the Removal and Installation portion of this section.
b While rotating front disc brake hub and rotor, tighten to 68 N·m (50 lb-ft) to seat wheel bearings. Back nut off 90 degrees (1/4 turn).
c While rotating front disc brake hub and rotor, tighten to 68 N·m (50 lb-ft) to seat wheel bearings. Back nut off 90 degrees (1/4 turn). Tighten to 1.8 N·m (16 lb-in).

SPECIAL SERVICE TOOLS/EQUIPMENT

SPECIAL SERVICE TOOLS REQUIRED

Tool Number/ Description	Illustration
T50T-100-A Impact Slide Hammer	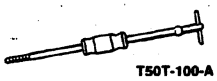 T50T-100-A
T53T-4621-B Pinion Bearing Cone Replacer (Drive Pinion Bearing Installation — Model 44)	T53T-4621-B

(Continued)

SPECIAL SERVICE TOOLS REQUIRED (Cont'd)

Tool Number/ Description	Illustration
T57L-500-B Bench Mounted Holding Fixture	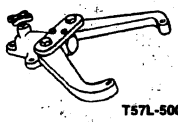 T57L-500-B
T57T-4851-B Companion Flange Holding Tool	T57T-4851-B
T58L-101-B Puller	T58L-101-B
T63P-9171-A Keystone Clamp Pliers	T63P-9171-A
T64P-3590-F Pitman Arm Puller	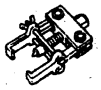 T64P-3590-F
T65L-4851-B Companion Flange Remover	T65L-4851-B
T74P-4635-C U-Joint Tool	T74P-4635-C
T75L-1165-B Axle Bearing/Seal Plate	T75L-1165-B
T75L-4201-A Clutch Housing Alignment Adapter	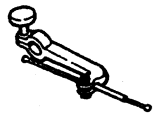 ST1864-B
T75T-1176-A Threaded Drawbar	T75T-1176-A

(Continued)

SPECIAL SERVICE TOOLS/EQUIPMENT (Continued)

SPECIAL SERVICE TOOLS REQUIRED (Cont'd)

Tool Number/ Description	Illustration
T77F 1102-A Bearing Cup Puller	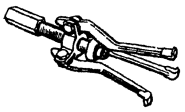 T77F 1102 A
T78P 5638-A Suspension Bushing Service Set	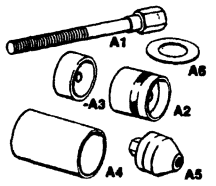 T78P-5638-A
T80T 3010-A 4WD Ball Joint Set	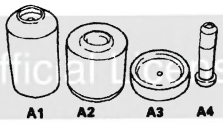 T80T 3010-A
T80T 4000-B Differential Housing Spreader Adapters	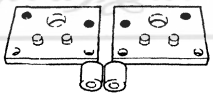 T80T-4000-B
T80T-4000-E Pinion Bearing Cup Replacer	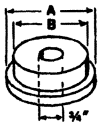 T80T-4000-E
T80T 4000-F Pinion Bearing Cup Replacer	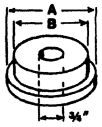 T80T-4000-F
T80T-4000 H Differential Axle Seal Replacer	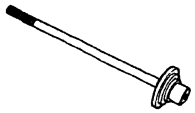 T80T 4000-H
T80T 4000 J Differential Side Bearing Replacer	 T80T 4000-J

(Continued)

SPECIAL SERVICE TOOLS REQUIRED (Cont'd)

Tool Number/ Description	Illustration
T80T 4000 R Spindle Bearing Replacer	 T80T 4000-R
T80T-4000 T Seal Replacer	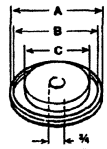 T80T-4000-T
T80T 4000 W Driver Handle	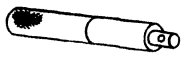 T80T-4000-W
T80T 4020 A Truck Pinion Depth Gauge	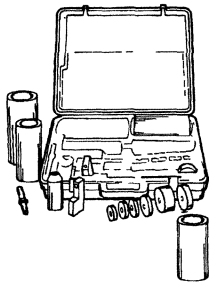 T80T-4020-A
T80T 5638-A Front Suspension Bushing Tool	 T80T 5638-A
T83T 1244 A Needle Bearing Replacer	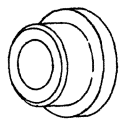 T83T-1244-A
T83T 3132-A1 Spindle/Axle Seal Replacer	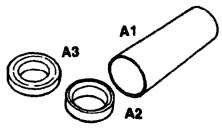 T83T 3132 A
T83T-4851 A Companion Flange Replacer	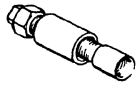 T83T 4851 A

(Continued)

Official Licensed Product Ford Motor Company

SPECIAL SERVICE TOOLS/EQUIPMENT (Continued)

SPECIAL SERVICE TOOLS REQUIRED (Cont'd)

Tool Number/ Description	Illustration
T92T-4000-A Spindle Seal Replacer	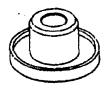 T92T-4000-A
T95T-3132-A Shaft Seal Replacer	T95T-3132-A 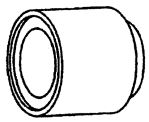 ST1003-A
T95T-3132-B Shaft Seal Replacer	T95T-3132-B 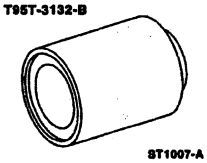 ST1007-A
T95T-3132-C Spindle Seal Replacer	T95T-3132-C 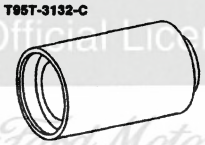 ST1008-A
T95T-3132-E Spindle Seal Replacer	T95T-3132-E 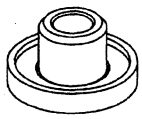 ST1009-A

Official Licensed Product
Ford Motor Company

SPECIAL SERVICE TOOLS DESIRED

Tool Number	Description
D78P-4201-B	Dial Indicator/Magnetic Base
D80L-100-A	Blind Hole Puller Set
D80L-630-5	Step Plate
D81L-4000-A	Driver Handle
D81L-4220-A	Pinion and Carrier Bearing Remover
D81T-4222-BR	Dummy Differential Bearings
D81T-4222-C	Dummy Differential Bearings
D81T-4628-D	Pinion Bearing Cup Remover Set
TOOL-4000-E	Differential Housing Spreader
TOOL-4201-C	Dial Indicator with Bracketry

SECTION 05-03B Axle, Front Drive, Dana Model 60 Monobeam

SUBJECT	PAGE
VEHICLE APPLICATION	05-03B-1
DESCRIPTION AND OPERATION	
Axle, Front Drive	05-03B-1
Locking Hubs	05-03B-1
DIAGNOSIS AND TESTING	
Axle, Front Drive	05-03B-2
REMOVAL AND INSTALLATION	
Axle Shaft	05-03B-2
Axle, Front	05-03B-9
Drive Pinion Oil Seal	05-03B-13
Steering Knuckle and Upper and Lower Ball Joints	05-03B-6
DISASSEMBLY AND ASSEMBLY	
Assembly of Differential into Housing	05-03B-26
DISASSEMBLY AND ASSEMBLY (Cont'd.)	
Ring Gear and Pinion Backlash	05-03B-26
Axle Shaft	05-03B-29
Depth Gauge Check	05-03B-23
Differential Case	05-03B-19
Gear Tooth Contact Pattern Check	05-03B-29
Pinion Bearing Cup Installation	05-03B-22
Pinion Bearing Preload and Final Depth Check	05-03B-24
Pinion, Drive Gear and Differential Case Carrier	05-03B-13
SPECIFICATIONS	05-03B-29
SPECIAL SERVICE TOOLS/EQUIPMENT	05-03B-30

VEHICLE APPLICATION

F-350 4x4

Official Licensed Product
Ford Motor Company

DESCRIPTION AND OPERATION

Axle, Front Drive

Dana Model 60 monobeam front drive axle is used on the F-350 4x4 vehicles and has open yoke design.

Other than the unique parts required for front-wheel drive, these axles are mechanically identical to Model 60 rear axle assemblies (4006). It should be noted that the automatic locking hubs are standard with manual locking hubs optional.

Dana Model 60 Monobeam Front Drive Axle

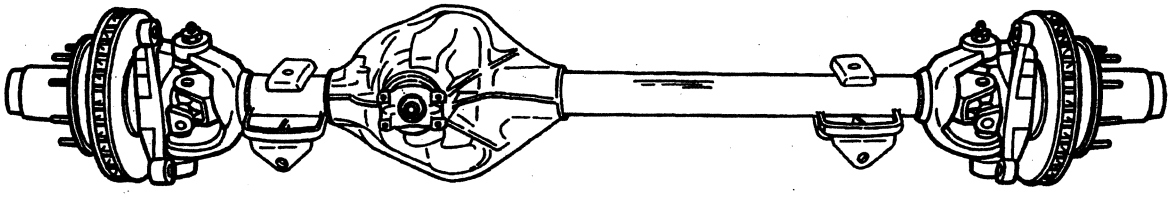

DANA MODEL 60 MONOBEAM FRONT DRIVE AXLE DE0464-A

Locking Hubs

Refer to Section 05-03C.

DIAGNOSIS AND TESTING

Axle, Front Drive

Refer to Section 05-00.

REMOVAL AND INSTALLATION

Axle Shaft

SPECIAL SERVICE TOOL(S) REQUIRED

Description	Tool Number
Spindle Bearing Replacer	T80T-4000-R
Driver Handle	T80T-4000-W
Spindle Seal Replacer	T92T-4000-A
Shaft Seal Replacer	T95T-3132-B
Spindle/Axle Seal Replacer	T83T-3132-A1

Removal

1. Raise the front of the vehicle and install safety stands.
2. Remove the lug nuts (1012) and remove the front wheel (1007) and tire.

Dana Model 60 Monobeam Front Drive Axle, Disassembled View

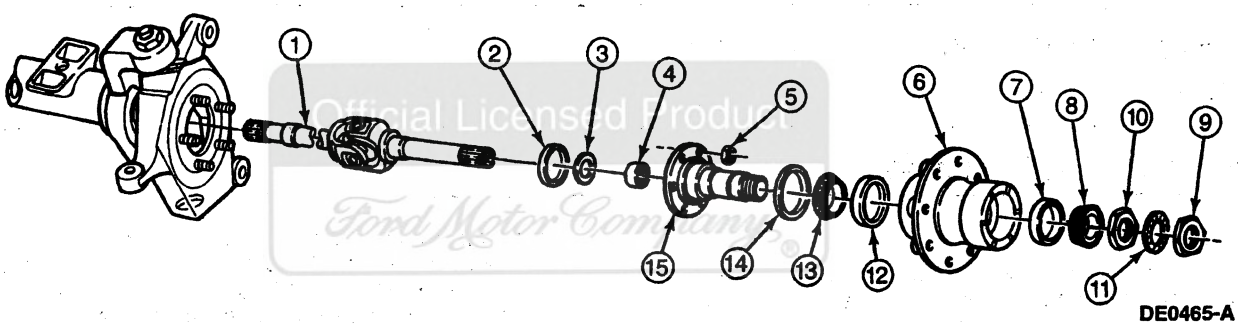

DE0465-A

Item	Part Number	Description
1	3220	Axle Shaft Assy
2	3C132	Axle Shaft Rolling Diaphragm Seal (RDS)
3	3299	Integral Spacer/Seal
4	3123	Caged Needle Bearing
5	4571	Nut
6	—	Front Disc Brake Hub (Part of 1102)
7	1239	Outer Bearing Cup

(Continued)

Item	Part Number	Description
8	1240	Wheel Bearing — Outer
9	1197	Outer Lock Nut
10	1B198	Inner Lock Nut
11	1198	Lockwasher
12	1243	Inner Bearing Cup
13	1244	Wheel Bearing — Inner
14	1190	Wheel Hub Grease Seal
15	3105	Front Wheel Spindle

Official Licensed Product
Ford Motor Company

REMOVAL AND INSTALLATION (Continued)

3. **CAUTION: After removal, the disc brake caliper (2B120) must be wired to the frame or otherwise supported to prevent suspending the disc brake caliper by the flexible hose. If securing the disc brake caliper is not practical, disconnect and plug the hose to the disc brake caliper. Upon installation, bleed the system as described in Section 06-06 in the Body, Chassis Manual.**

   Remove the disc brake caliper. Refer to Section 06-03 in the Body, Chassis Manual. Securely wire the disc brake caliper to the frame.
4. Remove wheel hubs, bearings, and lock nuts. Refer to Section 05-03C.
5. Remove the front disc brake hub and rotor (1102) from the front wheel spindle (3105).
6. NOTE: Relieve the suction between the axle shaft rolling diaphragm seal (RDS) and the front wheel spindle by gently lifting the seal lip away from the back of the front wheel spindle which will allow the front wheel spindle to slip off the axle shaft.

   Remove the nuts retaining the front wheel spindle to the knuckle. Lightly tap the front wheel spindle with a rawhide hammer to remove from the knuckle.

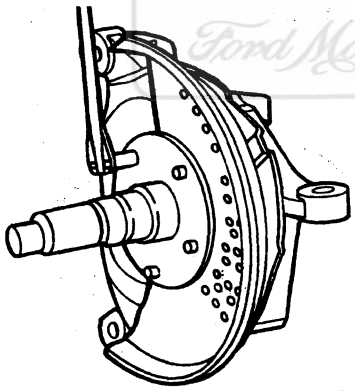

DE0466-A

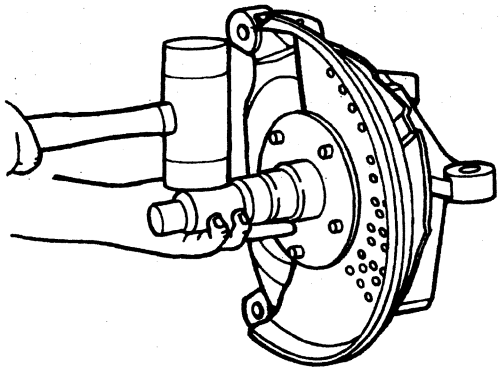

DE0467-A

7. Remove the front disc brake rotor shield (2K004) from the knuckle.
8. **CAUTION: Extreme care must be taken when removing or installing axle shafts to avoid damaging axle housing trunion seals.**

   Pull the axle shaft assembly out of the steering knuckle.

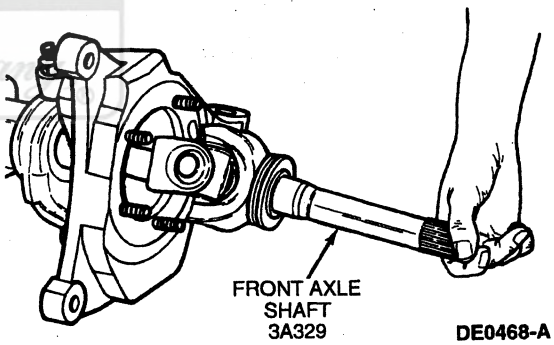

DE0468-A

Official Licensed Product
Ford Motor Company

REMOVAL AND INSTALLATION (Continued)

9. NOTE: Actuator pin might travel far enough up and contact bridge. If this occurs, remove bridge and use a slide hammer to complete removal.

   If required, remove the caged needle bearing seal and integral thrust washer from the front wheel spindle. Pull the bearing out of the front wheel spindle using Collet (1-1/2 to 1-3/4 inch) D80L-100-U, Actuator Pin D80L-100-H and Bridge Assembly D80L-100-W or equivalents.

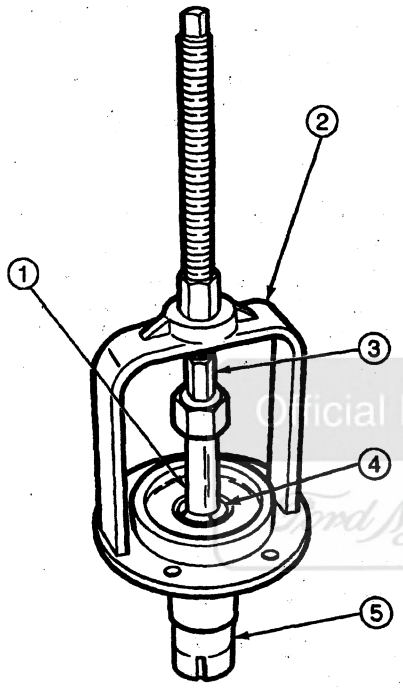

E6536-C

Item	Part Number	Description
1	D80L-100-U	Collet (1-1/2 to 1-3/4 Inch)
2	D80L-100-W	Bridge
3	D80L-100-H	Actuator Pin
4	3123	Bearing
5	3105	Front Wheel Spindle

Installation

1. NOTE: Replacement spindle bearings are shipped with a corrosion-preventive gel. This is not a lubricant. Bearing must be cleaned and repacked with the specified grease.

   If removed, pack a new bearing with High Temperature 4x4 Front Axle and Wheel Bearing Grease E8TZ-19590-A or equivalent meeting Ford specification ESA-M1C198-A.

2. NOTE: The writing on the bearing must face the inboard side of the front wheel spindle, toward the driving tool.

   Position the bearing in the bore of the front wheel spindle.

3. Drive the bearing in the front wheel spindle with Spindle Bearing Replacer T80T-4000-R and Driver Handle T80T-4000-W until the tool bottoms out against the front wheel spindle.

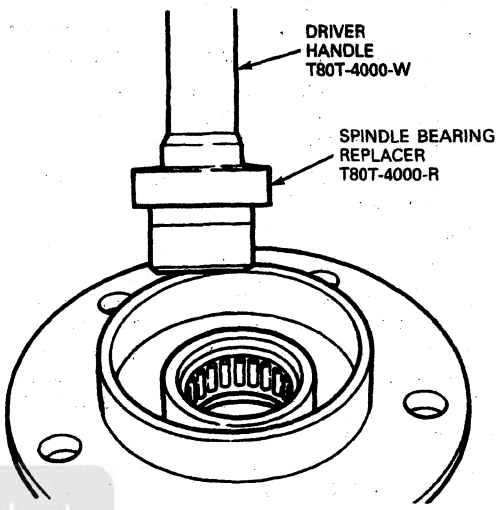

E6537-B

4. Install the thrust washer / seal assembly using Spindle Seal Replacer T92T-4000-A.

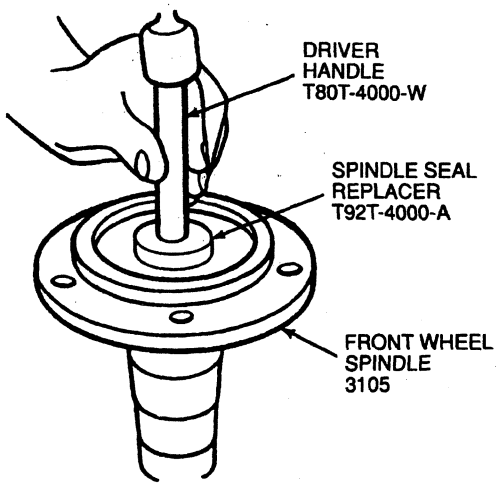

E9787-A

Official Licensed Product Ford Motor Company

REMOVAL AND INSTALLATION (Continued)

5. **CAUTION: Do not bend the sheet metal portion of the seal.**

   Install the rolling diaphragm seal on the axle shaft. Seat the rolling diaphragm seal by lightly tapping on the inner sheet metal lip of the seal with Shaft Seal Replacer T95T-3132-B, Driver Handle T83T-3132-A1, and a hammer to make sure it is seated squarely.

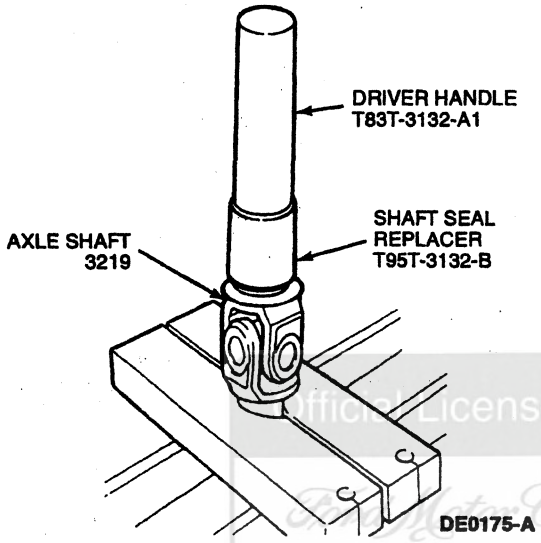

6. Lightly coat the lips of the axle shaft rolling diaphragm seal (RDS) and the mating surface of the front wheel spindle with High Temperature 4x4 Front Axle and Wheel Bearing Grease E8TZ-19590-A or equivalent meeting Ford specification ESA-M1C198-A.

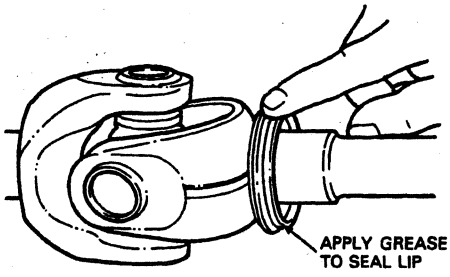

7. Carefully guide the axle shaft through knuckle and into the axle housing. Check that the splines of the axle shaft are engaged in the differential side gear splines.

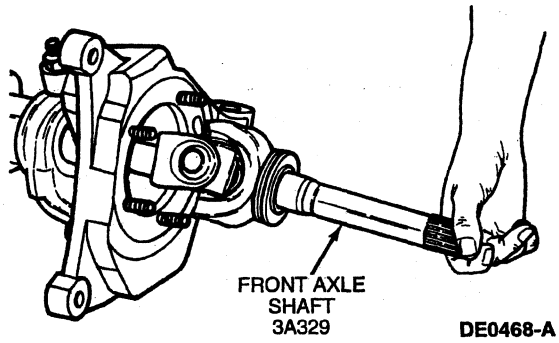

8. Install the front disc brake rotor shield on the steering knuckle.
9. Place front wheel spindle on the steering knuckle. Install nuts and tighten to 68-81 N·m (50-60 lb-ft).

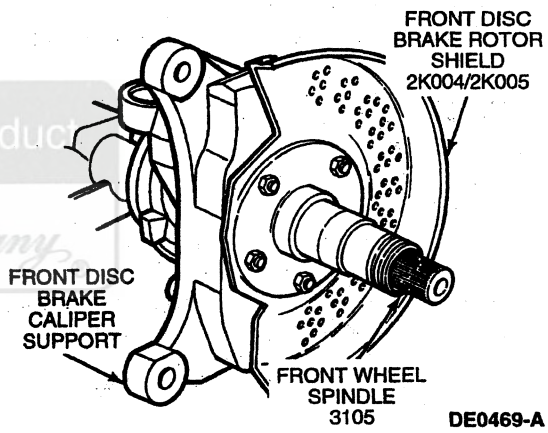

10. Install the front disc brake hub and rotor on the front wheel spindle, inspecting the wheel bearings and grease seal, and making sure there is adequate lubrication with High Temperature 4x4 Front Axle and Wheel Bearing Grease E8TZ-19590-A or equivalent meeting Ford specification ESA-M1C198-A.
11. Install bearing, lock nuts, and hub locks. Refer to Section 05-03C.
12. Install the disc brake caliper. Refer to Section 06-03 in the Body, Chassis Manual.
13. Install the front wheel and tire. Install the lug nuts and tighten to specification. Refer to Section 04-04 in the Body, Chassis Manual.

Official Licensed Product
Brighton Company

REMOVAL AND INSTALLATION (Continued)

Steering Knuckle and Upper and Lower Ball Joints

SPECIAL SERVICE TOOL(S) REQUIRED

Description	Tool Number
Pitman Arm Puller	T64P-3590-F
U-Joint Tool	T74P-4635-C
Ball Joint Remover/Replacer	T92T-3010 A
4WD Ball Joint Set (Includes Receiver Cup T80T-3010 A3)	T80T 3010-A
Ball Joint Remover/Replacer	T92T-3010 B

Removal

1 NOTE If replacing both or just the front suspension upper ball joint (3049), the front suspension lower arm ball joint (3050) must be removed first and installed last

Raise the vehicle on a hoist and position suitable safety stands under the frame

2 Remove the lug nuts (1012) and the wheel (1007) and tire

3 Remove the disc brake caliper (2B120) Refer to Section 06-03 in the Body, Chassis Manual Securely wire the disc brake caliper to the frame

4 Remove the axle shaft and front wheel spindle (3105)

5 Disconnect the steering arm from the knuckle using Pitman Arm Puller T64P-3590-F

6 Remove the cotter pin from the stud of the front suspension upper ball joint Loosen retaining nuts of both the front suspension upper ball joint and the front suspension lower arm ball joint Remove the top nut

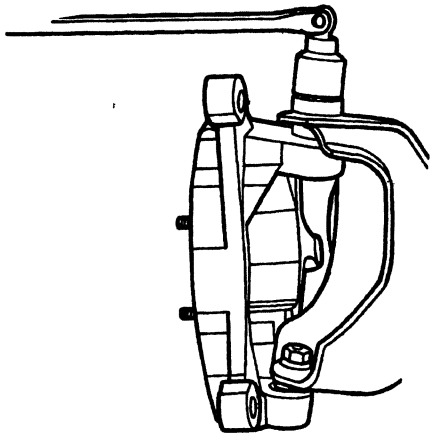

DE0470-A

7 Using a rawhide or heavy-duty plastic hammer, hit sharply on the top stud to free the knuckle from the tube yoke After the knuckle is free from the yoke, remove the lower nut and remove the knuckle from the tube yoke.

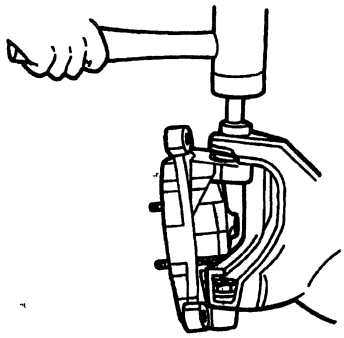

DE0471-A

8 Secure the knuckle in a vise Remove the snap ring from the front suspension lower arm ball joint

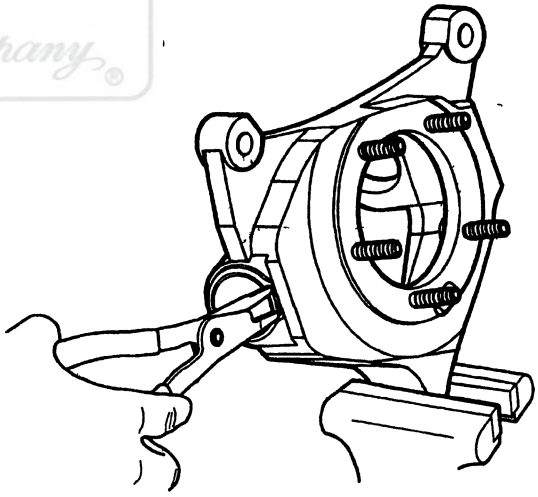

DE0472-A

Licensed Product Ford Motor Company

REMOVAL AND INSTALLATION (Continued)

9. Assemble U-Joint Tool T74P-4635-C and Ball Joint Remover / Replacer T92T-3010-A over the front suspension lower arm ball joint. Turn the forcing screw clockwise to remove the front suspension lower arm ball joint.

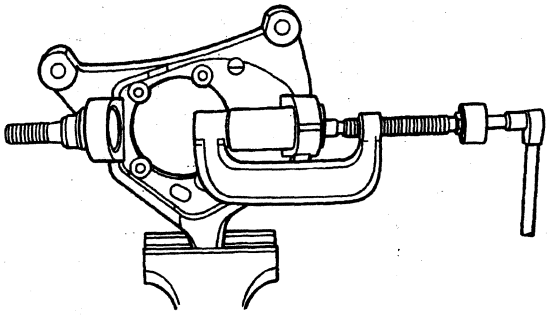

DE0473-A

10. Assemble U-Joint Tool T74P-4635-C and Ball Joint Remover / Replacer D81T-3010-A4 and Ball Joint Remover / Replacer D81T-3010-A3 from Ball Joint Adapter Set D81T-3010-A or equivalents over the front suspension upper ball joint. Turn the forcing screw clockwise to remove the front suspension upper ball joint.

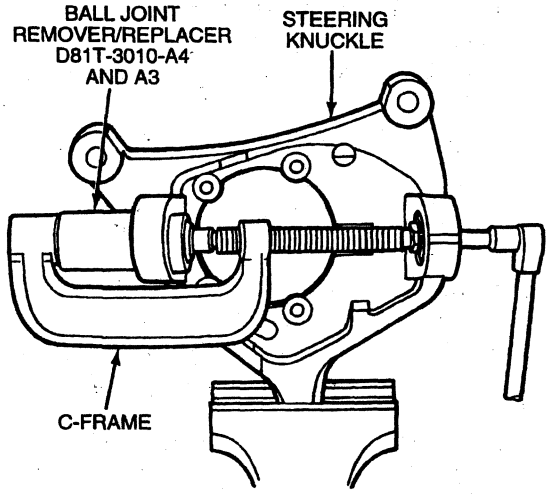

DE0474-A

Installation

1. NOTE: The front suspension upper ball joint must be installed first.

   Position the front suspension upper ball joint along with U-Joint Tool T74P-4635-C and Receiver Cup D81T-3010-A5, Ball Joint Remover / Replacer Tools D81T-3010-A1, D81T-3010-A3 (part of Ball Joint Adapter Set D81T-3010-A) and D81T-3010-A4 or equivalents on the knuckle. Turn the forcing screw clockwise until the front suspension upper ball joint bottoms in the bore. Remove the tools.

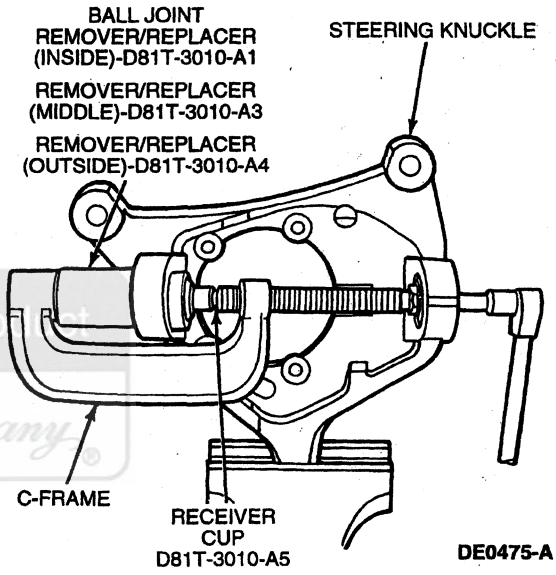

DE0475-A

REMOVAL AND INSTALLATION (Continued)

2. Position the front suspension lower arm ball joint, U-Joint Tool T74P-4635-C, Receiver Cup T80T-3010-A3 and Ball Joint Remover / Replacer T92T-3010-B inside of Ball Joint Remover / Replacer T92T-3010-A on the knuckle to force ball joint into position.

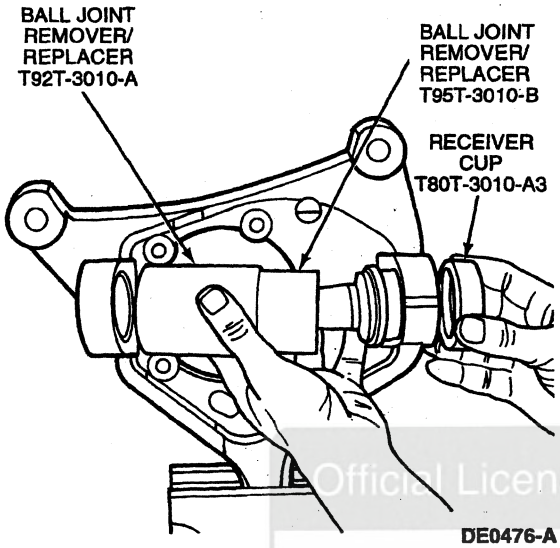

3. Turn the forcing screw clockwise until the front suspension lower arm ball joint bottoms in the bore. Remove the tools.

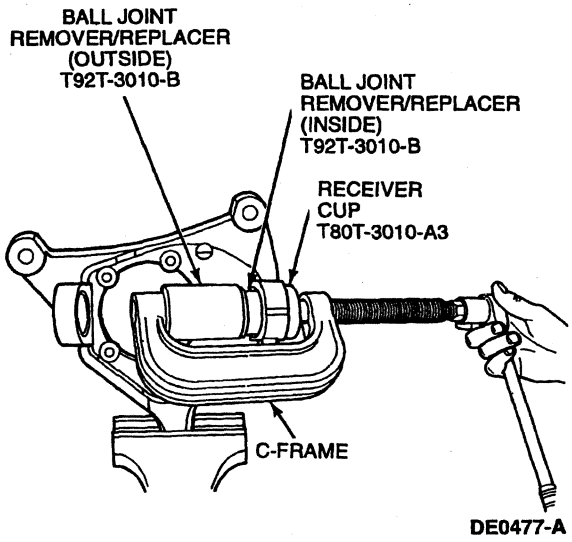

4. Install the snap ring on the front suspension lower arm ball joint.

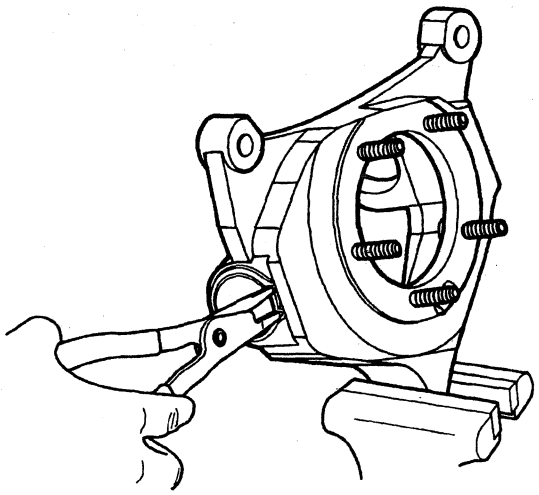

5. Assemble the knuckle to the tube yoke. Install the camber bushing, if previously removed. Install the retaining nut of the front suspension upper ball joint. Do not tighten at this time.
6. Install the retaining nut of the front suspension lower arm ball joint.
7. **CAUTION: If these tightening procedures are not followed, life of the front suspension upper ball joint and front suspension lower arm ball joint will be reduced.**

   Tighten both retaining nuts as follows:

   a. Tighten nut of the front suspension lower arm ball joint to 47 N·m (35 lb-ft).
   b. Tighten nut of the front suspension upper ball joint to 95 N·m (70 lb-ft).
   c. Advance nut of the front suspension upper ball joint to next castellation, and install new cotter pin.
   d. Retighten nut of the front suspension lower arm ball joint to 203 N·m (150 lb-ft).
8. Assemble the front wheel spindle and axle shaft.
9. Install the disc brake caliper. Refer to Section 06-03 in the Body, Chassis Manual.
10. Connect the steering arm (tie rod or connecting rod) to the steering knuckle. Tighten the retaining nut to 70-100 N·m (52-74 lb-ft).
11. Install the tire and wheel. Tighten the lug nuts to specifications. Refer to Section 04-04 in the Body, Chassis Manual.
12. Remove the safety stands and lower the vehicle.

Official Licensed Product Ford Motor Company

REMOVAL AND INSTALLATION (Continued)

Axle, Front

SPECIAL SERVICE TOOL(S) REQUIRED

Description	Tool Number
Pitman Arm Puller	T64P-3590-F

Removal

1. Raise the vehicle on a twin-post hoist.
2. Remove the front wheels (1007) and tires from the vehicle.
3. **CAUTION: After removal, the disc brake caliper (2B120) must be wired to the spring or otherwise supported to prevent suspending the disc brake caliper by the flexible hose. Allowing the disc brake caliper to hang by the flexible hose could result in brake line failure. If suspension of the disc brake caliper is not possible, remove it. Refer to Section 06-03 in the Body, Chassis Manual.**

   Remove the disc brake caliper from the spindle. Refer to Section 06-03 in the Body, Chassis Manual.
4. Remove the washers and nuts securing the front stabilizer bar links (5K483) to the front stabilizer bar (5482). Disconnect the front stabilizer bar links from the front stabilizer bar.
5. If required, remove the U-bolts and bolts and nuts retaining the front stabilizer bar and stabilizer bar brackets (5486) to the axle and remove the front stabilizer bar.

Front Stabilizer Bar Assembly

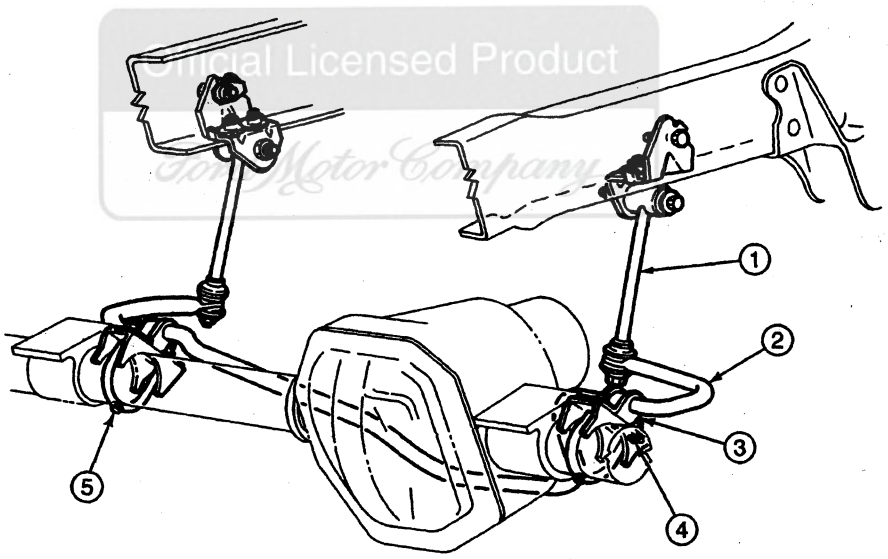

E6336-C

Item	Part Number	Description
1	5K483	Front Stabilizer Bar Link
2	5482	Front Stabilizer Bar

(Continued)

Item	Part Number	Description
3	5486	Stabilizer Bar Bracket
4	N606088-S	Bolt
5	5455	U-Bolt

6. Remove the cotter pins and castellated nuts securing the connecting rod and tie rod end to the steering knuckles. Separate the connecting rod and tie rod end from the steering knuckles using Pitman Arm Puller T64P-3590-F. Wire the steering linkage to the spring.

REMOVAL AND INSTALLATION (Continued)

Spindle (Steering Knuckle) Connecting Rod Attachment Locations

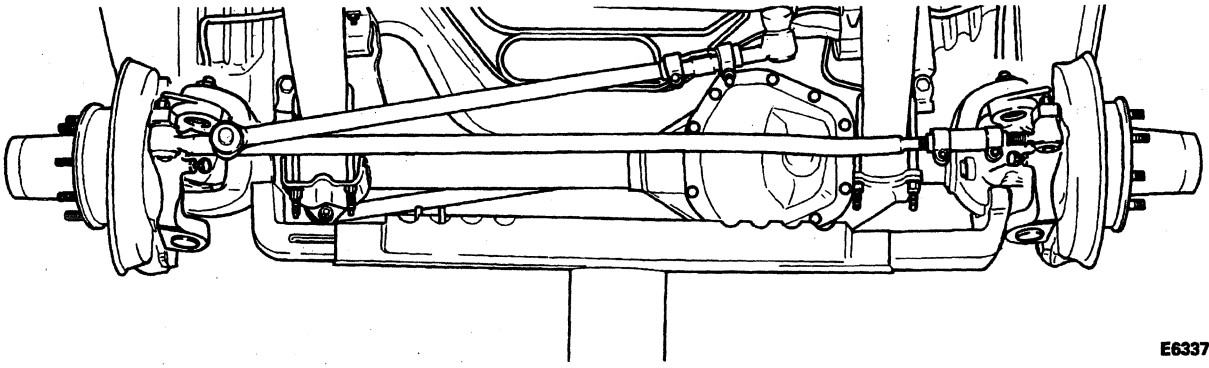

E6337-C

7. Remove the two nuts and U-bolts from the front driveshaft U-joint flange.
8. NOTE: Mark yoke and driveshaft with a marking paint pen for assembly in the same position.
   Disconnect the driveshaft from the front axle pinion flange. Securely wire the driveshaft to the frame.

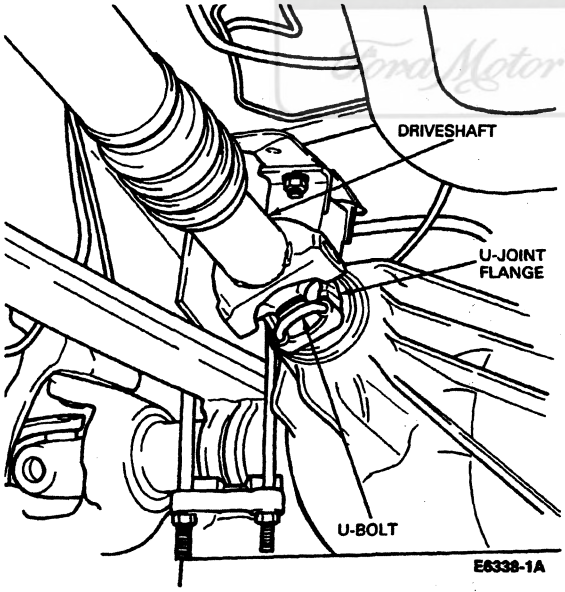

E6338-1A

9. Disconnect the vent tube at the axle housing. Plug the vent fitting.

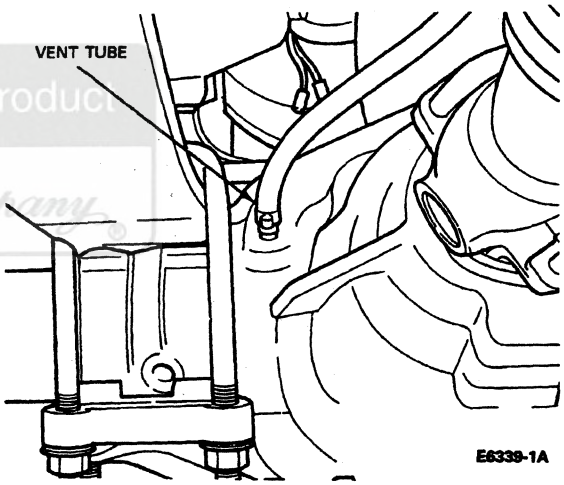

E6339-1A

10. On the right-hand side of the vehicle, remove the nut and bolt, and disconnect the tracking bar from the right-hand spring cap.

Official Licensed Product
Ford Motor Company

REMOVAL AND INSTALLATION (Continued)

Tracking Bar

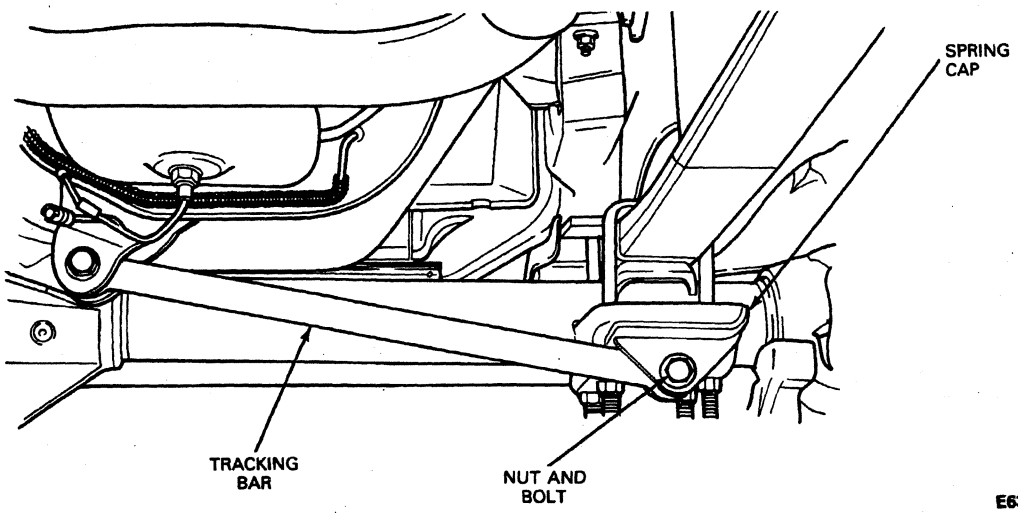

11. Carefully lower the twin-post hoist until the vehicle is approximately three feet from the floor.
12. **WARNING: BEFORE PROCEEDING, MAKE SURE THE VEHICLE IS SECURELY SUPPORTED.**

    Position safety stands on the front springs about halfway between the front axle and the rear mounting shackle. Lower the vehicle so the front springs rest on the safety stands.
13. Support the axle under the differential carrier with a suitable jack, such as Rotunda Heavy Duty Truck Transmission Jack 164-R3510 or equivalent.
14. Remove the U-bolts and nuts securing the axle to the spring.
15. Carefully lower the axle from the vehicle.
16. If required, place the axle in a suitable differential carrier repair stand.

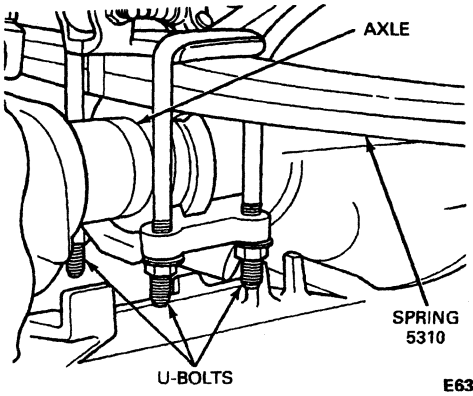

Installation

1. With the axle supported under the differential carrier by a suitable transmission jack, carefully raise the axle to the vehicle. Make sure the retaining bolt head protruding from the leaf spring plate seats in the recessed portion of the axle spring mounting plate.
2. Install the nuts, U-bolts and spring caps securing the axle to the front spring. Tighten to 113-153 N·m (83-113 lb-ft).

Unlicensed Product Ford Motor Company

REMOVAL AND INSTALLATION (Continued)

3. Remove jack and raise the vehicle to a suitable working height. Remove safety stands.

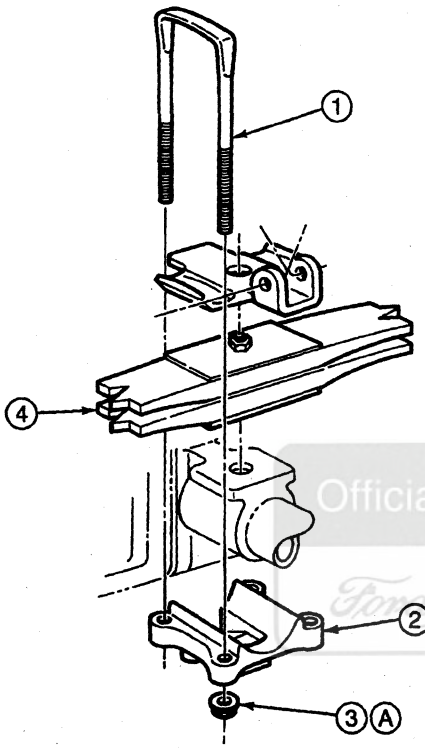

E6343-C

Item	Part Number	Description
1	N801485-S56	Bolt
2	5A500	Spacer
3	N801342-S2	Nut
4	5310	Spring
A	—	Tighten to 113-153 N·m (83-113 Lb-Ft)

4. Connect the driveshaft to the front axle pinion flange, secure with nuts and U-bolts, and tighten to 11-20 N·m (8-15 lb-ft). Refer to Section 05-01.
5. On the right-hand side of the vehicle, connect the tracking bar to the spring cap, and secure with nut and bolt. Tighten to 70-100 N·m (52-74 lb-ft).
6. Connect the vent tube to the axle housing.
7. Connect the connecting rod and tie rod end to the steering knuckles. Secure the connecting rod end and tie rod end with castle nuts. Tighten to 70-100 N·m (52-74 lb-ft). Install cotter pins. If necessary, advance nut to next castellation to install cotter pin.
8. Connect front stabilizer bar link to front stabilizer bar. Tighten to 21-33 N·m (15-24 lb-ft).
9. If removed, position front stabilizer bar and stabilizer bar bracket on axle shaft housing, and tighten nuts to 48-68 N·m (35-50 lb-ft).

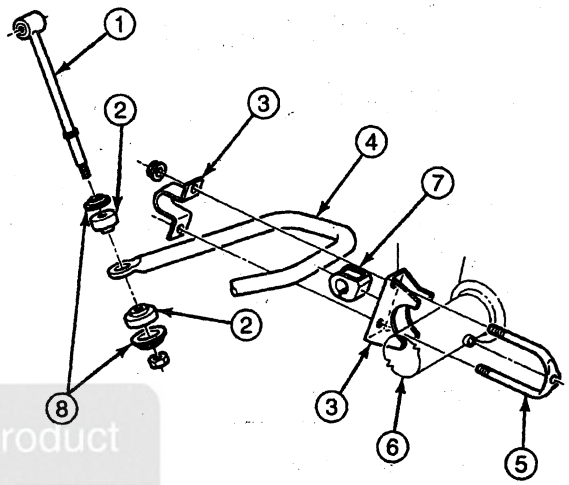

DE0288-A

Item	Part Number	Description
1	5K483	Front Stabilizer Bar Link
2	5493	Front Stabilizer Bar Link Insulator
3	5486	Stabilizer Bar Bracket
4	5482	Front Stabilizer Bar
5	5455	U-Bolt (RH)
6	3002	Axle Shaft Housing
7	5484	Front Stabilizer Bar Insulator
8	18171	Washers

10. Install disc brake calipers and part of front disc brake hub and rotors (1102). Refer to Section 06-03 in the Body, Chassis Manual.
11. Install the wheel and tire on the vehicle. Refer to Section 04-04 of the Body, Chassis Manual.
12. Check and fill axle lubricant.
13. Lower the vehicle to the ground.

Official Licensed Product
Ford Motor Company

REMOVAL AND INSTALLATION (Continued)

Drive Pinion Oil Seal

SPECIAL SERVICE TOOL(S) REQUIRED

Description	Tool Number
Companion Flange Holding Tool	T57T-4851-B
Companion Flange Remover	T65L-4851-B
Impact Slide Hammer	T50T-100-A
Pinion Seal Replacer	T56T-4676-B

Removal

1. NOTE: The pinion seal can be replaced without removing the axle from the vehicle. Compounded or synthetic rubber seals do not require soaking.

   Raise the vehicle on a hoist or raise the front end of the vehicle with a jack. Install safety stands under the frame rails and lower the jack or hoist far enough to allow the axle to drop into the rebound position for working clearance.
2. Mark U-joint flange and driveshaft prior to removing. Remove the nuts and two U-bolts from the front axle U-joint flange and disconnect the driveshaft from the front axle pinion flange. Wire the driveshaft to the frame.
3. Using Companion Flange Holding Tool T57T-4851-B to hold the pinion companion flange, remove the pinion shaft nut.
4. Using Companion Flange Remover Tool T65L-4851-B remove the companion flange.
5. Using Seal Remover TOOL-1175-AC or equivalent in combination with Slide Hammer T50T-100-A, remove the pinion seal.

Installation

1. Clean the seat of the pinion seal. Drive the pinion seal into the housing using Pinion Seal Replacer T56T-4676-A. Coat the seal lip of the new seal with a small amount of Premium Rear Axle Lubricant XY-80W90-QL or equivalent meeting Ford specification WSP-M2C197-A. Do not put sealer on the sealing lip.
2. Coat the inside of the pinion flange with a small quantity of Premium Rear Axle Lubricant XY-80W90-QL or equivalent meeting Ford specification WSP-M2C197-A and install the flange on the pinion shaft using Companion Flange Replacer TOOL-4858-E or equivalent.
3. Install a new pinion retaining nut on the pinion shaft. Tighten to 298-379 N·m (220-280 lb-ft).
4. Connect the driveshaft to the front axle pinion flange and align marks made prior to removal. Secure with nuts and U-bolts and tighten. Refer to Section 05-01.
5. Raise the vehicle, remove the safety stands and then lower the vehicle to road position. Check the level of axle lubricant and add the specified lubricant as necessary.

DISASSEMBLY AND ASSEMBLY

Pinion, Drive Gear and Differential Case Carrier

SPECIAL SERVICE TOOL(S) REQUIRED

Description	Tool Number
Companion Flange Holding Tool	T57T-4851-B
Companion Flange Remover	T65L-4851-B
Bearing Cup Puller	T77F-1102-A
Impact Slide Hammer	T50T-100-A
Jet Plug Remover	T77L-9533-B

Disassembly

1. Remove the front axle from the vehicle. Refer to this section.
2. Remove the axle shafts. Refer to Axle Shaft in the Removal and Installation portion of this section.
3. Position suitable container under differential carrier. Remove axle housing cover (4033) and drain lubricant from axle. The lubricant will drain out as the axle housing cover is removed. Tip carrier to allow lubricant to drain completely.
4. Remove any residual gasket material from carrier mating surface. Also clean cover face of carrier, making sure it is free of any nicks or burrs.
5. NOTE: Mating letters are stamped on bearing caps and carrier. Letters are in vertical and horizontal positions. Note the letter positions before removal. At time of assembly they are to be assembled exactly as removed.

   Loosen capscrews and remove bearing caps.

DISASSEMBLY AND ASSEMBLY (Continued)

Differential Assembly

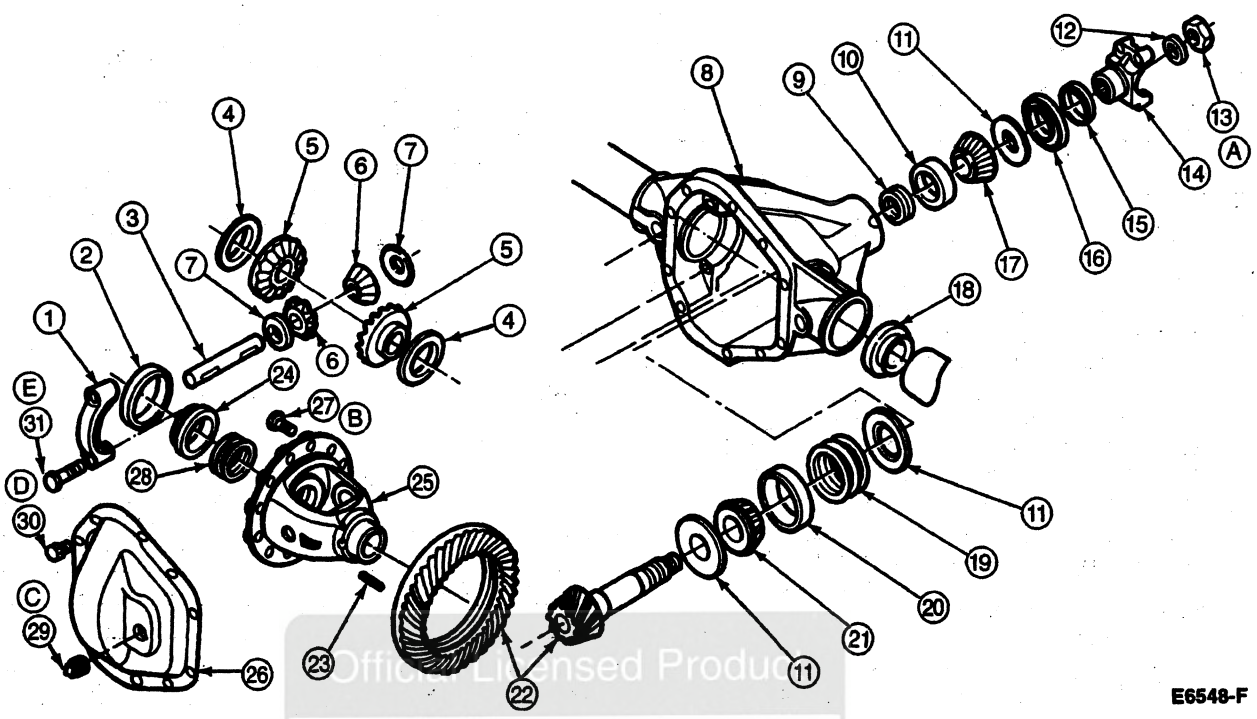

Item	Part Number	Description
1	—	Bearing Cap (Part of 3010)
2	4222	Differential Bearing Cup
3	4211	Differential Pinion Shaft
4	4228	Differential Side Gear Thrust Washer
5	4236	Differential Side Gear
6	4215	Differential Pinion Gear
7	4230	Differential Pinion Thrust Washer
8	—	Carrier (Part of 3010)
9	4109	Preload Shims
10	4616	Differential Drive Pinion Bearing Cup
11	4670	Front Axle Pinion Shaft Oil Slinger
12	372632-S	Washer
13	354845-38	Nut
14	4851	Front Axle Universal Joint Flange
15	4859	Drive Pinion Oil Seal Deflector
16	4676	Front Axle Drive Pinon Seal
17	4621	Differential Pinion Bearing
18	3254	Axle Shaft Oil Seal
19	4672	Drive Pinion Shims

(Continued)

Item	Part Number	Description
20	4628	Front Axle Pinion Bearing Cup
21	4630	Differential Pinion Bearing
22	3222	Ring Gear and Pinion
23	4241	Differential Pinion Shaft Lock Pin
24	1244	Differential Bearing
25	4204	Differential Case
26	4033	Axle Housing Cover
27	350672-S	Bolt
28	4067	Differential Bearing Shim
29	853051-S	Fill Plug
30	3C323	Bolt
31	355765-S	Bolt
A	—	Tighten to 298-379 N·m (220-280 Lb-Ft)
B	—	Tighten to 136-162 N·m (100-120 Lb-Ft) for Grade 8. For Grade 9 (C7 Lines on Bolt Head), Tighten to 176-190 N·m (130-140 Lb-Ft)
C	—	Tighten to 28-34 N·m (21-25 Lb-Ft)
D	—	Tighten to 41-54 N·m (30-40 Lb-Ft)
E	—	Tighten to 109-122 N·m (80-90 Lb-Ft)

Ford Motor Company

DISASSEMBLY AND ASSEMBLY (Continued)

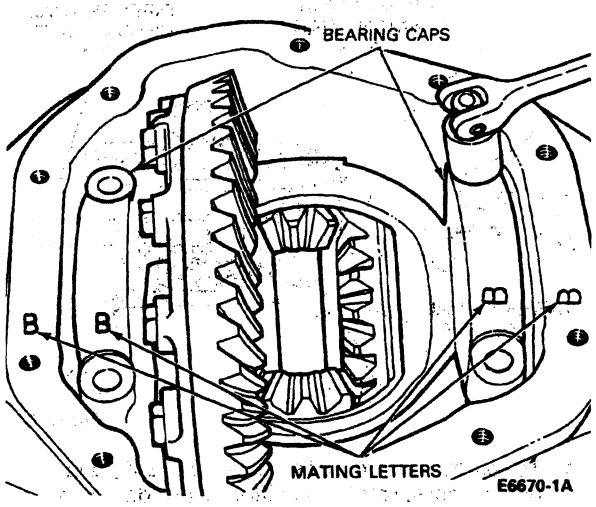

6. Place Differential Housing Spreader TOOL-4000-E or equivalent on the differential case (4204). Install Dial Indicator / Magnetic Base D78P-4201-B or equivalent on the carrier housing. Do not spread housing more than 0.38 mm (0.015 inch).

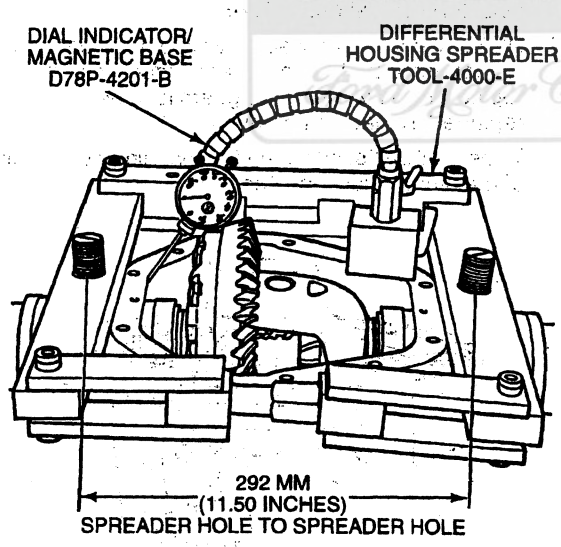

7. NOTE: Use caution to avoid damage to ring gear and drive pinion.

   Pry differential case from carrier with two pry bars. After differential case has been removed, remove spreader. Mark or tag bearing cups for correct positioning during assembly.

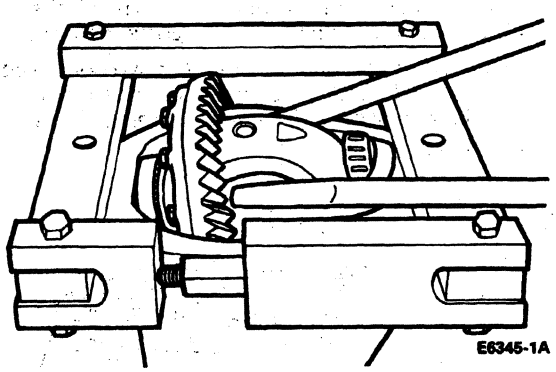

8. Remove differential bearings with Pinion and Carrier Bearing Puller D81L-4220-A or equivalent. Wire differential bearing shims (4067), differential bearing cup (4222) and bearing cone together. Identify from which side they were removed (ring gear side or opposite side). If differential bearing shims are damaged, replace during assembly.
9. Reposition differential case in puller and remove other bearing cone as described above. Replace bearings whenever they are removed from the carrier.

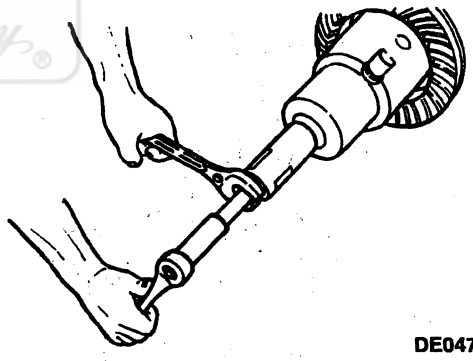

10. Place a few shop towels over the vise to prevent the ring gear teeth from being nicked when ring gear falls from the differential carrier.

Official Licensed Product Ford Motor Company

DISASSEMBLY AND ASSEMBLY (Continued)

11. NOTE: Whenever removing the ring gear bolts, always replace with new bolts upon assembly.

    Place differential case in vise. Remove bolts. Tap ring gear with a rawhide hammer to free it from the differential case. Remove differential case and ring gear from vise.

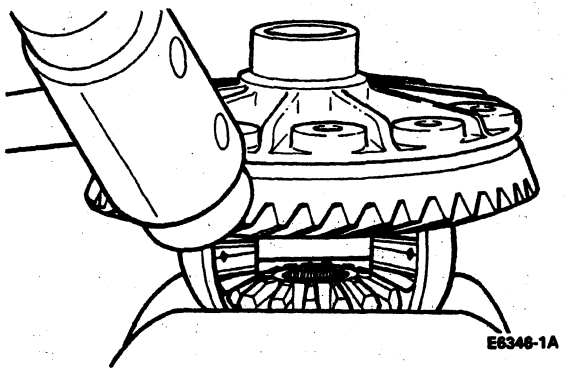
E6348-1A

12. Replace differential case in vise and use a small drift to drive out the roll pin that secures the differential pinion shaft (4211).

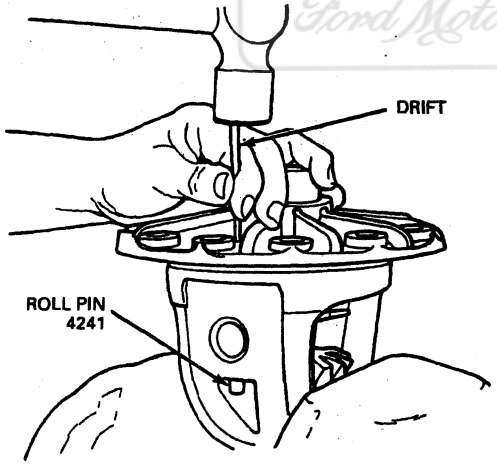

E6671-B

13. Remove differential pinion shaft with drift.

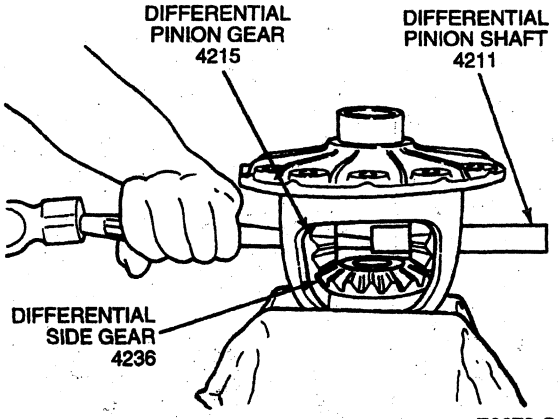

E6672-C

14. To remove differential side gears (4236) and pinion gears, rotate the differential side gears. This will allow the differential pinion gears (4215) to turn to the opening of the case.
15. Remove differential pinion gears and the differential pinion thrust washer (4230) behind the differential pinion gears.
16. Lift out differential side gears and differential side gear thrust washers (4228).
17. NOTE: If excessive wear is visible on all parts, it is suggested that the complete differential be replaced. If any one of the gears is to be replaced, replace as a set.

    Inspect all parts, including the machined surfaces of the differential case itself.

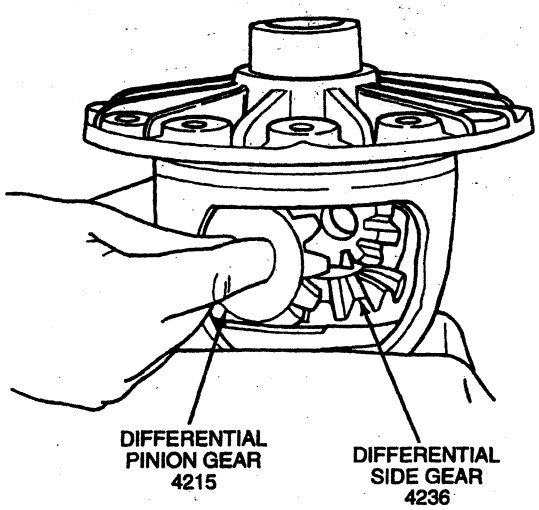

E6347-C

18. Turn nose of carrier in a horizontal position, remove pinion nut. Hold end yoke or flange with Companion Flange Holding Tool T57T-4851-B and remove pinion nut and washer.

Official Licensed Product
Ford Motor Company

DISASSEMBLY AND ASSEMBLY (Continued)

19. Remove end yoke or flange with Companion Flange Remover T65L-4851-B. If end yoke or flange shows wear in the area of the seal contact, replace.
20. Remove pinion by tapping with a rawhide hammer. Catch the pinion with your hand to prevent it from falling to the ground and being damaged.

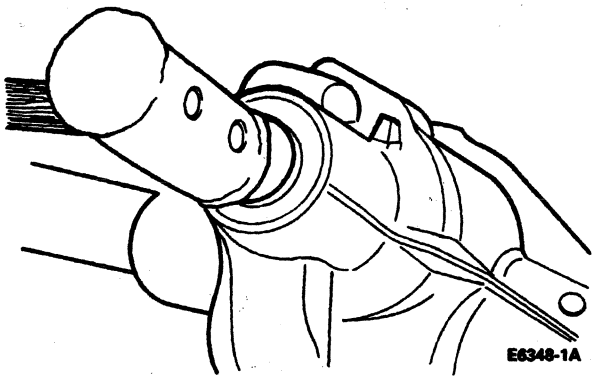

21. Pull out pinion seal with Bearing Cup Puller T77F-1102-A and Impact Slide Hammer T50T-100-A. Discard pinion seal. Replace with new pinion seal at time of assembly.

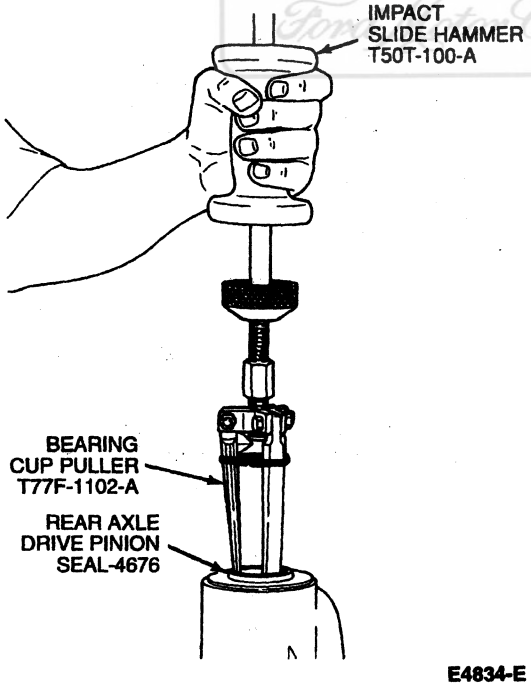

22. NOTE: Service kit has 10 drive pinion shims (preload) of various thicknesses.

    NOTE: On the spline end of the pinion there are drive pinion shims (preload). These shims may stick to the pinion (part of ring gear) or bearing, or even fall out. These drive pinion shims are to be collected and kept together since they will be used later in assembly. Try not to damage drive pinion shims. If drive pinion shims are damaged, replace with new ones. Drive pinion shims are available in the Pinion Preload Shims chart.

    Remove differential pinion bearing (4621), outer oil slinger and preload shims.

PINION PRELOAD SHIMS

Available Thicknesses	
mm	In.
0.36	0.014
0.41	0.016
0.46	0.018
0.51	0.020
0.56	0.022
0.76	0.030
0.38	0.015
0.53	0.021
0.58	0.023
0.25	0.010

23. **CAUTION: Do not nick carrier bore.**

    NOTE: The inner carrier section may vary in pinion bore depth due to the possibility of the need for either a baffle or oil slinger or both.

    NOTE: Shims are located between the bearing cup and carrier bore and may also include an oil slinger. If shims and oil slingers are bent or nicked, replace at time of assembly. Wire shim stacks together and measure each. If stack has to be replaced, replace with same thickness.

    NOTE: Both baffle and oil slinger are part of the drive pinion shims and are to be kept intact for assembly.

    NOTE: The baffle serves the same purpose as a dam, to make sure the differential pinion bearings are maintained with lubricant. The slinger assists lubricant flow up through the oil channels to lubricate the differential pinion bearings. If used, they are part of the pinion setting adjustment.

    Turn nose of carrier down. Remove outer differential drive pinion bearing cup (4616) with Pinion Bearing Cup Remover D81T-4628-D and Driver Handle D81L-4000-A or equivalents. Locate driver on back edge of differential drive pinion bearing cup; drive differential drive pinion bearing cup out of carrier.
24. Remove the inner bearing cup and shims with Pinion Bearing Cup Remover D81T-4628-A and Driver Handle D81L-4000-A or equivalents.

DISASSEMBLY AND ASSEMBLY (Continued)

Bearing Cup Removal

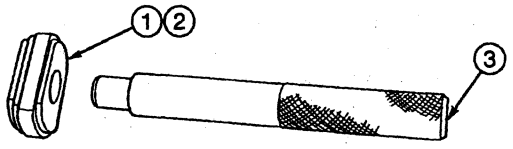

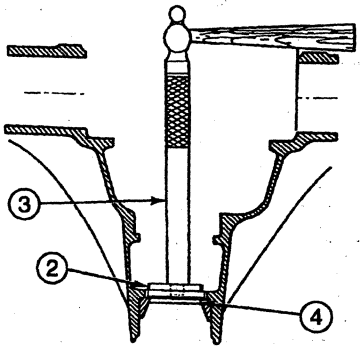

OUTER CUP REMOVAL

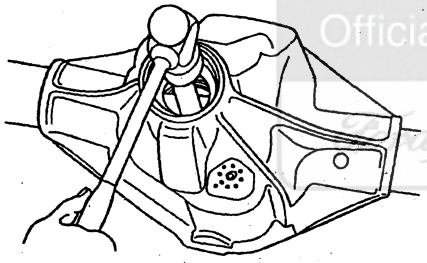

INNER DIFFERENTIAL PINION BEARING CUP REMOVAL E6349-D

Item	Part Number	Description
1	D81T-4628-A	Pinion Bearing Cup Remover — Inner
2	D81T-4628-D	Pinion Bearing Cup Remover — Outer
3	D81L-4000-A	Driver Handle

(Continued)

Item	Part Number	Description
4	4616	Differential Drive Pinion Bearing Cup (Outer)

25. Remove differential pinion bearings from pinion with Pinion and Carrier Bearing Puller D81L-4220-A or equivalent. Bend the slinger as required to obtain clearance for remover tool installation. Discard the slinger.

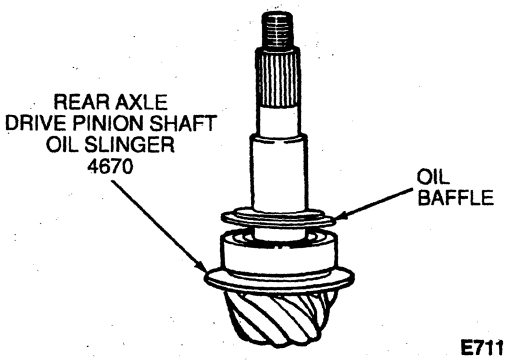

E7115-C

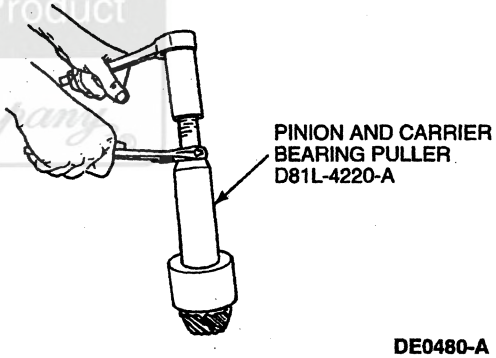

DE0480-A

26. If required, remove the inner axle shaft oil seals (3254) with Jet Plug Remover T77L-9533-B. Thread the remover tool into the axle shaft oil seal, remove and discard axle shaft oil seal. Thread the remover tool into the metallic seal housing, remove and discard seal housing.

Official Licensed Product
Ford Motor Company

DISASSEMBLY AND ASSEMBLY (Continued)

Inner Axle Shaft Seal Removal

AXLE SHAFT OIL SEAL REMOVAL

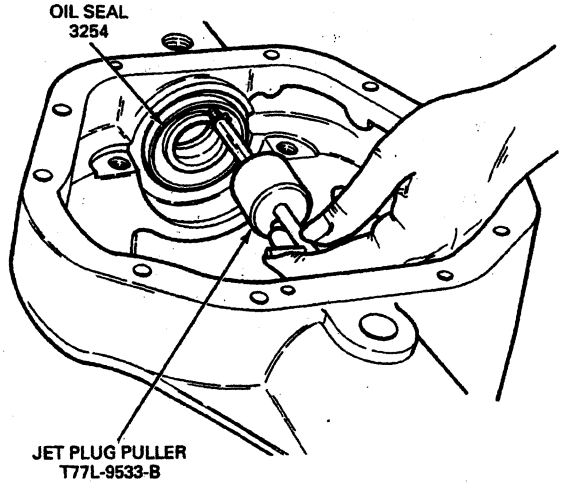

SEAL METAL HOUSING REMOVAL

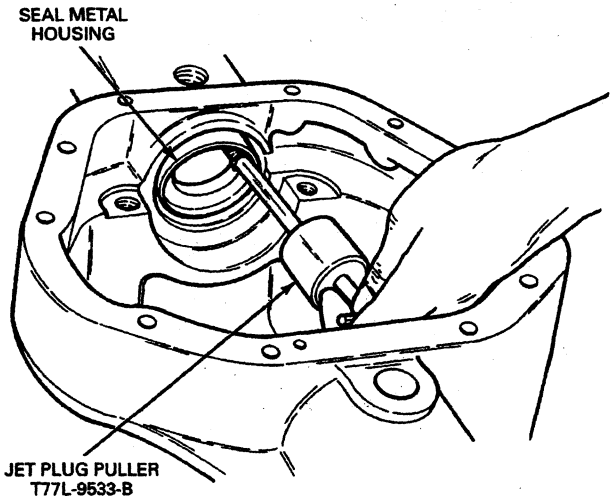

E6549-B

Differential Case

SPECIAL SERVICE TOOL(S) REQUIRED

Description	Tool Number
Clutch Housing Alignment Adapter	T75L-4201-A

Assembly

1. NOTE: An easy way to assemble the differential side gears and pinion gears is to have all parts lubricated before assembly.

   Place differential case (4204) in vise. Apply High Temperature 4x4 Front Axle and Wheel Bearing Lubricant E8TZ-19590-A or equivalent meeting Ford specification ESA-M1C198-A, to new differential side gear thrust washers (4228) and to hubs and thrust face of the new differential side gears.
2. Assemble both differential side gears. Apply grease to differential pinion thrust washers (4230) and new pinion gears. Assemble new differential pinion gears (4215) and differential pinion thrust washers.
3. Assemble both differential side gears and differential side gear thrust washers, hold in place with hand, then assemble the pinion gears and differential pinion thrust washers to hold the differential side gears in place.
4. Rotate the differential side gears until the holes of the differential side gear thrust washers and pinion gears line up with the holes of the differential case. If the differential side gears cannot be rotated by hand, install one of the axle shafts into the spline of the differential side gear and use a pipe wrench to turn the shaft.

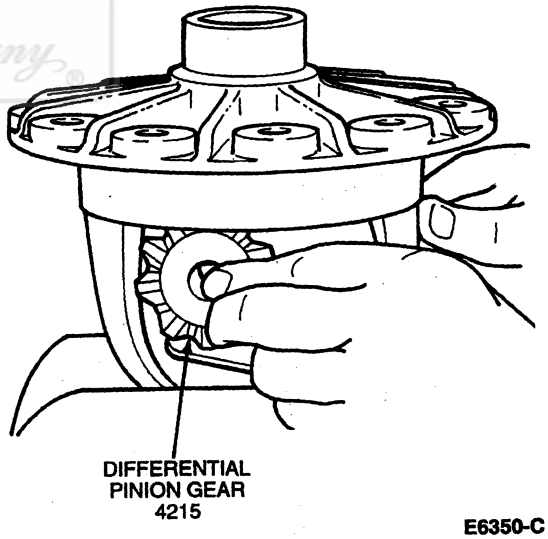

E6350-C

5. Use a drift to line up the holes with those of the differential case.

Official Licensed Product

DISASSEMBLY AND ASSEMBLY (Continued)

6. Assemble differential pinion shaft (4211), and drive on differential pinion shaft to remove drift. Align hole of the roll pin of the differential pinion shaft with the hole of the differential pinion shaft lock pin (4241) of the differential case.

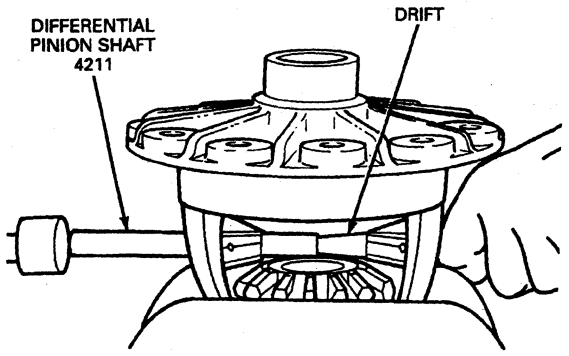

E6401-B

7. Assemble differential pinion shaft lock pin. Peen metal of differential case over roll pin to lock in two places 180 degrees apart.

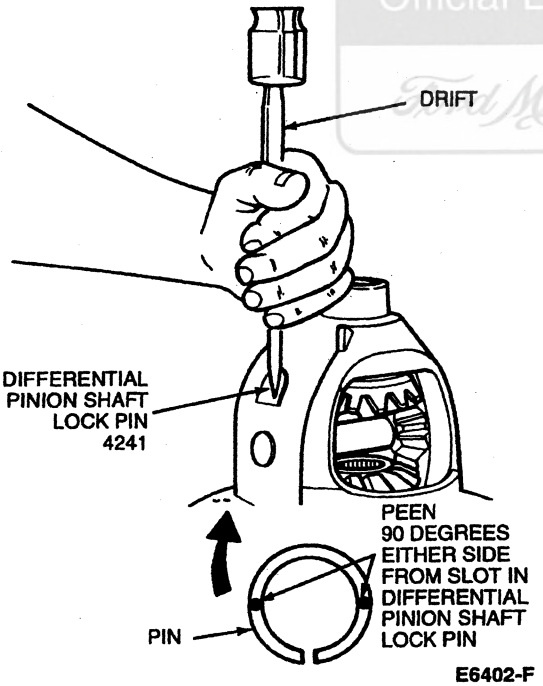

E6402-F

8. Make sure flange face of the differential case is free of nicks or burrs. Assemble ring gear to differential case. Line up holes of the ring gear with those of the differential case. Use new ring gear bolts. Draw up bolts alternately and evenly. Tighten Grade 8 ring gear bolts to 136-162 N·m (100-120 lb-ft). Tighten Grade 9 ring gear bolts to 176-190 N·m (130-140 lb-ft).
9. Place the inner axle shaft oil seals (3254) in the axle tube housing. Press both axle shaft oil seals in at the same time with an appropriate installation tool. Make sure axle shaft oil seals are pressed in straight and not cocked in the bore. Coat the lips of the axle shaft oil seals with High Temperature 4x4 Front Axle and Wheel Bearing Lubricant E8TZ-19590-A or equivalent meeting Ford specification ESA-M1C198-A.

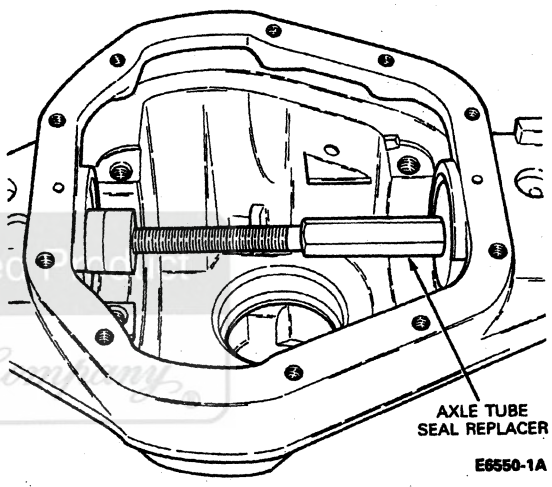

E6550-1A

10. Install Dummy Differential Bearings Tool D81T-4222-DR or equivalent onto differential case. Remove all nicks, burrs, dirt, etc. from hubs to allow bearings to rotate freely.
11. NOTE: Dial indicator should have a minimum travel capability of 5.08 mm (0.200 inch).

    Assemble differential case into carrier (less pinion). Mount Dial Indicator with Bracketry TOOL-4201-C or equivalent as shown. Use Dial Indicator with Clutch Housing Alignment Adapter T75L-4201-A. Locate tip of indicator on flat surface of one of the ring gear bolt spot faces.

Official Licensed Product Ford Motor Company

DISASSEMBLY AND ASSEMBLY (Continued)

12. Force differential (4026) as far as possible toward the indicator. With force still applied, set indicator at zero.

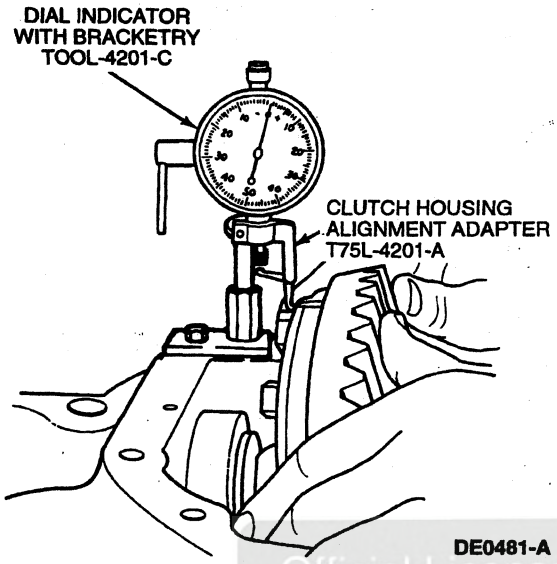

DE0481-A

13. Force the differential as far as it will go in the opposite direction. Repeat these steps until you have obtained the same reading. Record the reading of the indicator. This will be the total amount of differential bearing shims (4067) required (less preload), and will be calculated later during assembly.

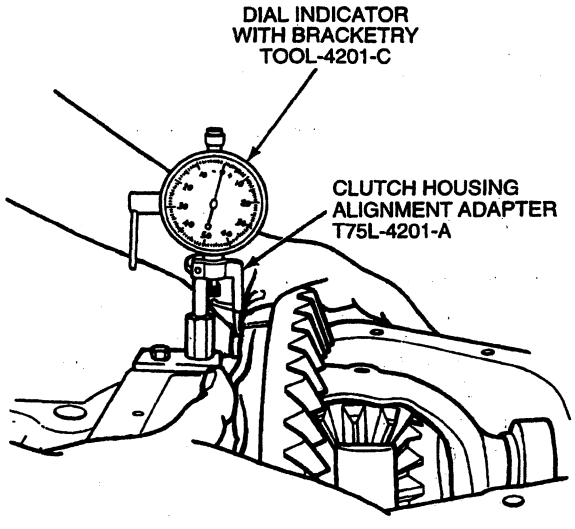

DE0482-A

14. NOTE: Ring gears and pinions are supplied only in matched sets. Matching numbers are etched on both the pinion and ring gear for verification. If a new gear set is being used, verify the numbers of each pinion and ring gear before proceeding with assembly.

    After making sure the readings are correct, remove indicator and differential from housing. Do not remove master bearings from differential case at this time.

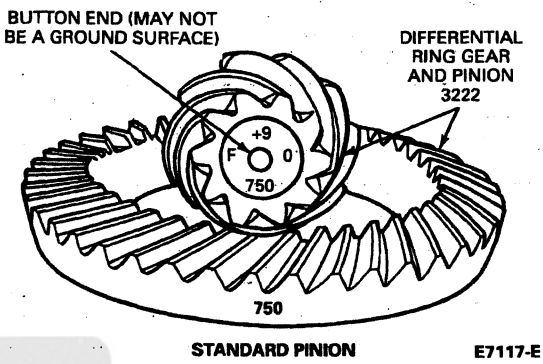

STANDARD PINION E7117-E

15. The reading obtained in Step 13 is the total differential case end play which will be needed in Assembly of Differential into Housing procedure in the Disassembly and Assembly portion of this section.

The distance from the centerline of the ring gear to the backface of the pinion is 127 mm (5.000 inch).

On the button of each pinion, there is etched a plus (+) number, a minus (-) number, or a zero (0) number that indicates the best running position for each particular gear set. This dimension is controlled by the shimming behind the inner pinion bearing cup.

NOTE: Do not use the button of the pinion for pinion positioning. The button of the pinion is no longer a ground surface.

For example, if a pinion is etched a plus m+8 (+3), this pinion would require 0.08 mm (0.003 inch) less shims than a pinion etched "0". This means by removing shims, the mounting distance of the pinion is increased, which is what m+8 (+3) indicates. Or if a pinion is etched m-8 (-3), we would want to add 0.08 mm (0.003 inch) more shims than would be required if the pinion were etched "0". By adding 0.08 mm (0.003 inch) shims, the mounting distance of the pinion was decreased, which is what m-8 (-3) indicated.

If the old gear set is to be reused, measure the old shim pack and build a new shim pack to this same dimension. If a baffle and oil slinger is used in the axle, it is considered as part of the shim pack.

To change the pinion adjustment, shims are available in thicknesses of 0.08, 0.13 and 0.25 mm (0.003, 0.005 and 0.010 inch).

Official Licensed Product

DISASSEMBLY AND ASSEMBLY (Continued)

NOTE: If baffle or oil slinger is bent or mutilated, it should be replaced.

Measure each shim separately with a micrometer and add together to get the total shim pack thickness from the original buildup.

If a new gearset is being used, notice the (+) or (-) etching on both the old and new pinion and adjust the thickness of the new shim pack to compensate for the difference of these two figures.

For example, if the old pinion reads m+5 (+2) and the new pinion is m-5 (-2), add 0.10-mm (0.004-inch) shims to the original shim pack.

Old Pinion Marking	New Pinion Marking (English)								
	-4	-3	-2	-1	0	+1	+2	+3	+4
+4	+0.008	+0.007	+0.006	+0.005	+0.004	+0.003	+0.002	+0.001	0
+3	+0.007	+0.006	+0.005	+0.004	+0.003	+0.002	+0.001	0	-0.001
+2	+0.006	+0.005	+0.004	+0.003	+0.002	+0.001	0	-0.001	-0.002
+1	+0.005	+0.004	+0.003	+0.002	+0.001	0	-0.001	-0.002	-0.003
0	+0.004	+0.003	+0.002	+0.001	0	-0.001	-0.002	-0.003	-0.004
-1	+0.003	+0.002	+0.001	0	-0.001	-0.002	-0.003	-0.004	-0.005
-2	+0.002	+0.001	0	-0.001	-0.002	-0.003	-0.004	-0.005	-0.006
-3	+0.001	0	-0.001	-0.002	-0.003	-0.004	-0.005	-0.006	-0.007
-4	0	-0.001	-0.002	-0.003	-0.004	-0.005	-0.006	-0.007	-0.008

Old Pinion Marking	New Pinion Marking (Metric)								
	-10	-8	-5	-3	0	+3	+5	+8	+10
+10	+0.20	+0.18	+0.15	+0.13	+0.10	+0.08	+0.05	+0.03	0
+8	+0.18	+0.15	+0.13	+0.10	+0.08	+0.05	+0.03	0	-0.03
+5	+0.15	+0.13	+0.10	+0.08	+0.05	+0.03	0	-0.03	-0.05
+3	+0.13	+0.10	+0.08	+0.05	+0.03	0	-0.03	-0.05	-0.08
0	+0.10	+0.08	+0.05	+0.03	0	-0.03	-0.05	-0.08	-0.10
-3	+0.08	+0.05	+0.03	0	-0.03	-0.05	-0.08	-0.10	-0.13
-5	+0.05	+0.03	0	-0.03	-0.05	-0.08	-0.10	-0.13	-0.15
-8	+0.03	0	-0.03	-0.05	-0.08	-0.10	-0.13	-0.15	-0.18
-10	0	-0.03	-0.05	-0.08	-0.10	-0.13	-0.15	-0.18	-0.20

Official Licensed Product

Pinion Bearing Cup Installation

SPECIAL SERVICE TOOL(S) REQUIRED

Description	Tool Number
Pinion Bearing Cup Replacer	T56T-4616-B
Includes:	
Inner Bearing Cup Replacer	T56T-4616-B2
Outer Bearing Cup Replacer	T56T-4616-B1
Threaded Drawbar	T75T-1176-A

1. Place the preload shims and oil slinger, if required, under the inner differential drive pinion bearing cup (4616) as shown.
2. Place the inner and outer differential drive pinion bearing cups into the carrier bore.
3. Place the Inner Bearing Cup Replacer T56T-4616-B2 (part of Pinion Bearing Cup Replacer T56T-4616-B) on the inner differential drive pinion bearing cup.
4. Place the Outer Bearing Cup Replacer T56T-4616-B1 (part of Pinion Bearing Cup Replacer T56T-4616-B) on the outer differential drive pinion bearing cup.
5. Install the Threaded Drawbar T75T-1176-A into the replacer tools. Tighten the drawbar to install the differential drive pinion bearing cups into the carrier bore.

DISASSEMBLY AND ASSEMBLY (Continued)

Pinion Bearing Cup Installation

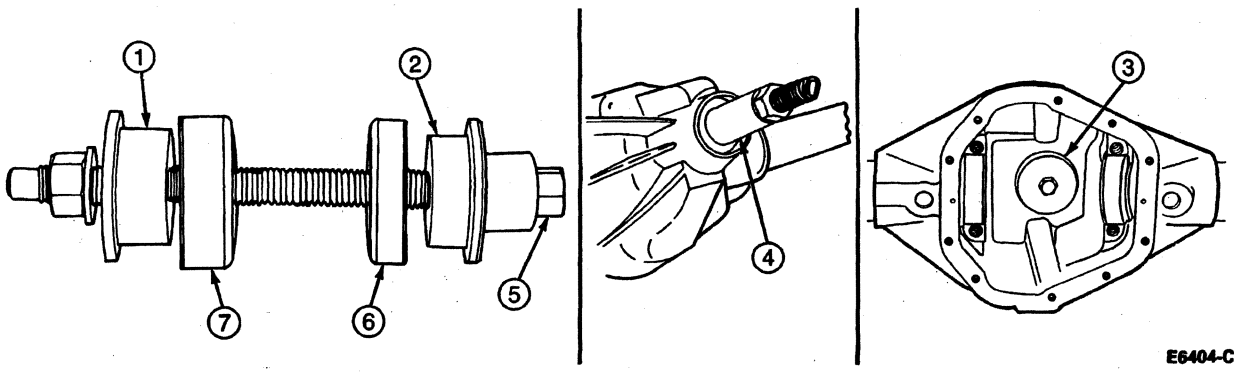

Item	Part Number	Description
1	T56T-4616-B2	Inner Bearing Cup Replacer (Part of T56T-4616-B)
2	T56T-4616-B1	Outer Bearing Cup Replacer (Part of T56T-4616-B)
3	—	Inner Cup Installation View
4	—	Outer Cup Installation View
5	T75T-1176-A	Threaded Drawbar
6	4616	Differential Drive Pinion Bearing Cup (Outer)
7	4628	Rear Axle Pinion Bearing Cup (Inner)

(Continued)

Official Licensed Product
Ford Motor Company

Depth Gauge Check

SPECIAL SERVICE TOOL(S) REQUIRED

Description	Tool Number
Pinion Depth Gauge	T79P-4020-A
Includes:	
Aligning Adapter	T76P-4020-A3
Driver Handle	T76P-4020-A11
Gauge Disc	T78P-4020-A15
Truck Pinion Depth Gauge	T80T-4020-A
Includes:	
Gauge Block	T80T-4020-F42
Screw	T80T-4020-F43

1. NOTE: If any of the gauge surfaces become nicked, the high spots must be removed with a medium India oilstone to make sure readings are correct.

   Place a new inner differential pinion bearing (4630) over the proper aligning adapter and insert into the differential pinion bearing retainer. Place the outer differential pinion bearing (4621) (new or used if in good condition) into the rear axle pinion bearing cup (4628) and assemble the handle onto the screw and hand-tighten. Note the 3/8 inch square drive in the handle to be used for obtaining the proper differential pinion bearing preload. Tighten to preload of 2.25-4.52 N·m (20-40 lb-in).
2. Center the proper gauge tube into the differential pinion bearing bore. Install the bearing caps and tighten capscrews to 109-122 N·m (80-90 lb-ft).
3. NOTE: The feeler gauge fit between the gauge tube and the gauge block should be a slight drag-type feeling. Make sure shims or feeler gauges are free of dirt to make sure reading is correct.

   Using a feeler gauge tool or shims, select the thickest feeler shim that will enter between the gauge tube and the gauge block. Insert the feeler gauge directly along the gauge block to make sure reading is correct.

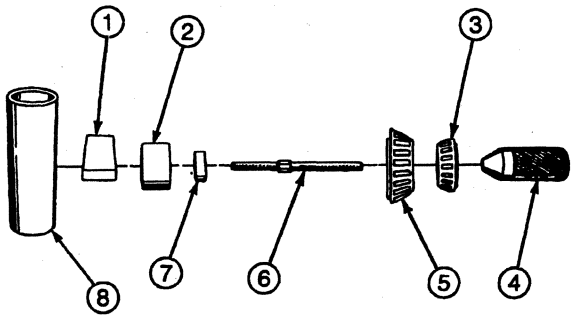

Item	Part Number	Description
1	T80T-4020-F42	Gauge Block (Part of T80T-4020-A)
2	T78P-4020-A15	Gauge Disc (Part of T79P-4020-A)

(Continued)

DISASSEMBLY AND ASSEMBLY (Continued)

Item	Part Number	Description
3	4621	Differential Pinion Bearing (Outer)
4	T76P-4020-A11	Driver Handle (Part of T79P-4020-A)
5	4630	Differential Pinion Bearing (Inner)
6	T80T-4020-F43	Screw (Part of T80T-4020-A)
7	T76P-4020-A3	Aligning Adapter (Part of T79P-4020-A)
8	D80T-4020-F48	Gauge Tube

4. NOTE: If the service pinion gear is marked with a plus (+) reading, this amount must be subtracted from the thickness dimension obtained between gauge block and gauge tube.

   NOTE: If the service pinion gear is marked with a minus (-) reading, this amount must be added to the thickness dimension obtained between gauge block and gauge tube.

   NOTE: In addition, you must use the exact same new inner pinion bearing used in the previous steps.

   After the correct feeler gauge feel is obtained, check the reading. This is the thickness of pinion shims required providing that, upon inspection of the service pinion gear, the button is etched "0."
5. NOTE: If a baffle or slinger is used, replace with a new one upon assembly and measure as part of the shim stack.

   Remove the inner pinion bearing cup and install the correct thickness of pinion shims in the carrier bore. Reinstall the pinion bearing cup and baffle (if used).

Pinion Bearing Preload and Final Depth Check

SPECIAL SERVICE TOOL(S) REQUIRED

Description	Tool Number
Axle Bearing / Seal Plate	T75L-1165-B
Axle Bearing / Seal Replacer	T75L-1165-DA
Pinion Seal Replacer	T56T-4676-B
Companion Flange Replacer	T85T-4851-AH

1. Assemble oil slinger (if used) onto pinion. Assemble differential pinion bearing (4621) using Axle Bearing / Seal Plate T75L-1165-B and Axle Bearing / Seal Replacer T75L-1165-DA.

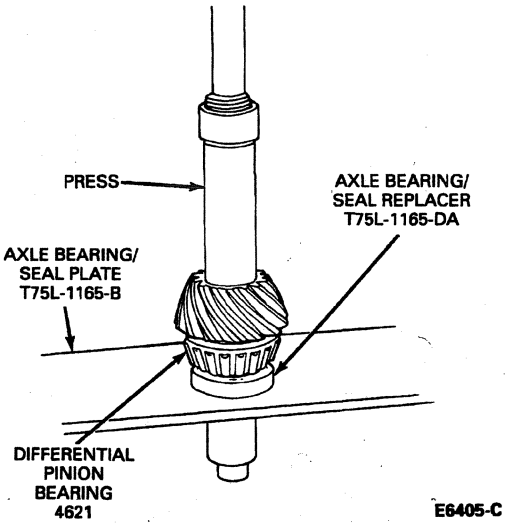

2. Assemble outer differential pinion bearing, oil slinger and pinion seal into housing. Coat the pinion seal with grease. Install the pinion seal with Pinion Seal Replacer T56T-4676-B. After installation, make sure the garter spring did not pop out. If the garter spring pops out, remove and replace pinion seal.

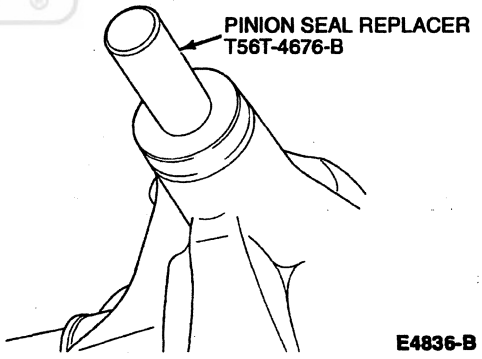

3. Assemble drive pinion shims onto pinion and install pinion into housing.
4. Assemble end yoke, washer and old pinion nut. Install the end yoke with Companion Flange Replacer T85T-4851-AH, if necessary, to draw the drive pinion up to engage the nut. Tighten nut to 298-379 N·m (220-280 lb-ft).

DISASSEMBLY AND ASSEMBLY (Continued)

5. Using a N•m (lb-in) torque wrench, rotate pinion. The torque required to rotate the pinion should be between 2.25-4.52 N•m (20-40 lb-in). To increase preload, remove drive pinion shims from pinion. To decrease preload, add drive pinion shims to pinion.

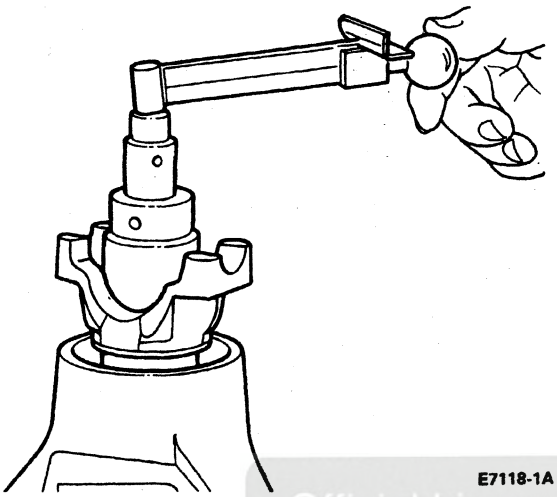

E7118-1A

6. If rotating torque is within specifications, remove nut and install new pinion nut and tighten to 298-379 N•m (220-280 lb-ft).

NOTE: The following illustration shows the arrow in the pinion pointing in two directions.

- The arrow pointing toward the end yoke indicates that by removing drive pinion shims, the distance from the centerline of the axle to the pinion mounting surface (back face of pinion) is increased, giving a plus reading.
- The arrow pointing toward the drive pinion indicates that by adding pinion shims, the distance from the centerline of the axle to the pinion button is decreased, giving a minus reading.
- The pinion bearing preload shim pack does not affect the pinion depth setting.
- However, drive pinion shim change will affect pinion preload. If position of pinion is changed, the preload shim pack must be changed the same amount in order to not change preload.

- The arrows on the ring gear show the method for increasing or decreasing ring gear backlash by inserting or removing differential bearing shims (4067).

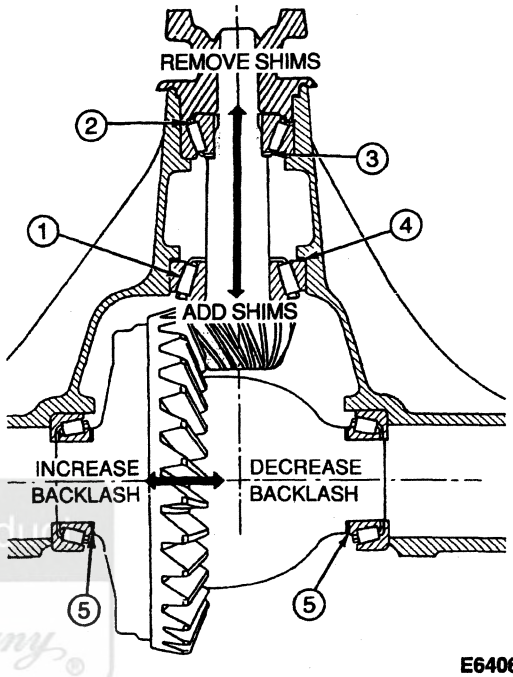

E6406-F

Item	Part Number	Description
1	4630	Differential Pinion Bearing
2	4621	Differential Pinion Bearing (Outer)
3	4109	Pinion Bearing Shim
4	4672	Drive Pinion Shim
5	4067	Differential Bearing Shim

7. If removed, install the yoke with Companion Flange Replacer T85T-4851-AH if necessary to draw the drive pinion up to engage the nut.

Official Licensed Product Ford Motor Company

DISASSEMBLY AND ASSEMBLY (Continued)

8. Install the new washer and nut, and tighten nut to 298-379 N·m (220-280 lb-ft).

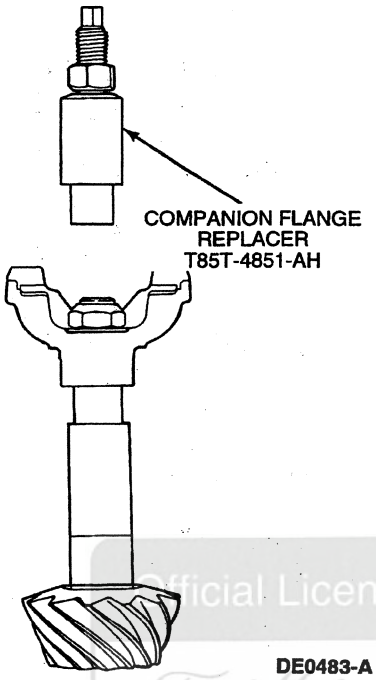

DE0483-A

Assembly of Differential Into Housing

SPECIAL SERVICE TOOL(S) REQUIRED

Description	Tool Number
Clutch Housing Alignment Adapter	T75L-4201-A

Ring Gear and Pinion Backlash

1. Place differential (4026) into housing. Differential master bearings should still be assembled to differential case (4204).
2. Set up Dial Indicator with Bracketry TOOL-4201-C or equivalent. Use Dial Indicator with Clutch Housing Alignment Adapter T75L-4201-A. Force ring gear into mesh with the pinion. Rock ring gear to allow the teeth of the gears to mesh. With force still applied to the differential case, set indicator at zero.

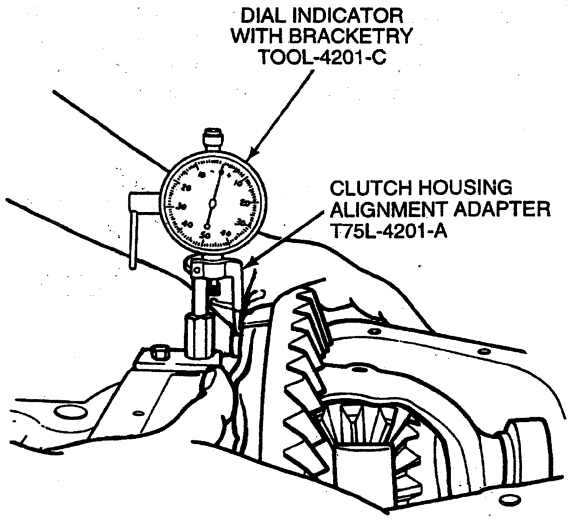

DE0482-A

3. NOTE: This reading will be the necessary amount of differential bearing shims (4067) required between the differential case and differential bearings on the ring gear side.

   Force the differential case (ring gear) away from the pinion gear to obtain an indicator reading. Repeat until the same reading is obtained each time.
4. Remove indicator and differential case from the carrier.
5. Remove master bearings from differential case.

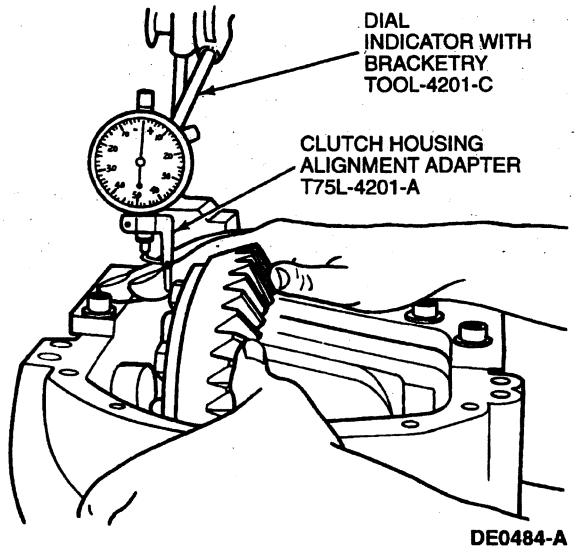

DE0484-A

Official Licensed Product
Ford Motor Company

DISASSEMBLY AND ASSEMBLY (Continued)

6. As determined in Step 3, place the required amount of differential bearing shims on the ring gear hub of the differential case. For example, if the reading in Step 3 was 1.14 mm (0.045 inch), place 1.14 mm (0.045 inch) of differential bearing shims on the hub of the ring gear side of the differential case.
7. Install the bearing cone on the ring gear side of the differential case. Drive the bearing onto the hub using Differential Bearing Cone Replacer D81T-4221-A or equivalent as shown.
8. To determine the correct amount of differential bearing shims to be placed on the hub of the drive pinion side of the differential case, subtract the reading obtained in Step 3 from the total differential case end play. Total differential case end play was determined under Steps 10 and 11 of Differential Case, Assembly in the Disassembly and Assembly portion of this section. When this amount is determined, add 0.36 mm (0.015 inch) to the amount. This is the required amount of differential bearing shims to be placed on the hub of the drive pinion side of the differential case.

   For example, total differential case end play was 2.30 mm (0.091 inch). The reading in Step 3 of this procedure was 1.14 mm (0.045 inch), which, when subtracted from 2.30 mm (0.091 inch), gives 1.16 mm (0.046 inch). 0.36 mm (0.015 inch) is added to give 1.52 mm (0.061 inch) of differential bearing shims to be placed on the hub of the drive pinion side of the differential case.
9. Place the required amount of differential bearing shims on the hub of the drive pinion side of the differential case.
10. Install the bearing cone on the hub of the drive pinion side of the differential case using Differential Bearing Cone Replacer D81T-4221-A or equivalent. Place Step Plate Adapter D80L-630-7 or equivalent on the ring gear side bearing to protect the bearing during installation of the drive pinion side bearing.

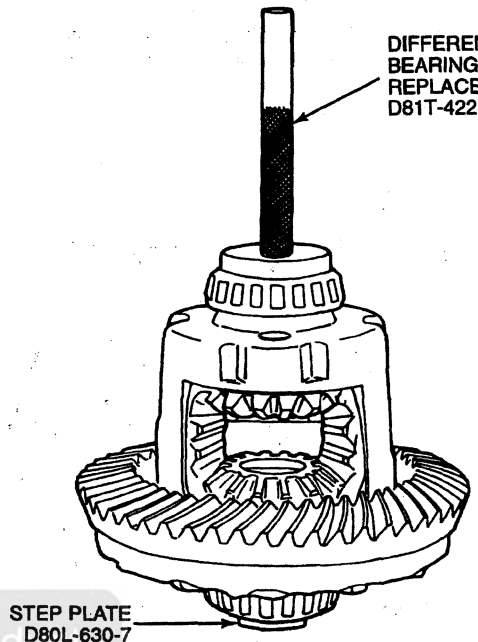

E6407-D

11. Place the bearing on the drive pinion side hub and drive it on using Differential Bearing Cone Replacer D81T-4221-A or equivalent.
12. **CAUTION: Do not spread carrier over 0.38 mm (0.015 inch).**

    Install Differential Housing Spreader TOOL-4000-E or equivalent and indicator to carrier. Remove indicator.

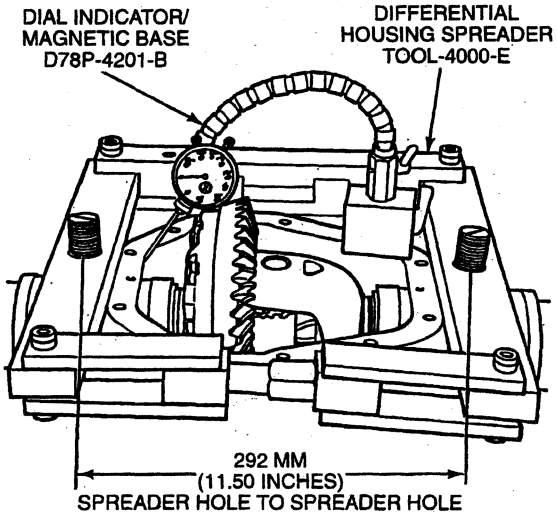

DE0237-B

13. Assemble differential bearing cup (4222) to differential bearing cones.

DISASSEMBLY AND ASSEMBLY (Continued)

14. NOTE: Avoid nicking the teeth of the ring gear and pinion during assembly.

    Install differential into carrier. Use a rawhide hammer to seat differential into crossbore of carrier.

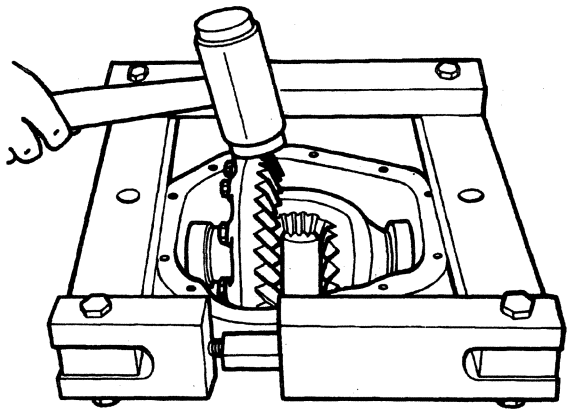

E8018-1A

15. Remove the spreader from the differential case.
16. Install bearing caps. Make sure the letters stamped on the caps correspond with those on the carriers. Tighten bearing capscrews to 109-122 N·m (80-90 lb-ft).

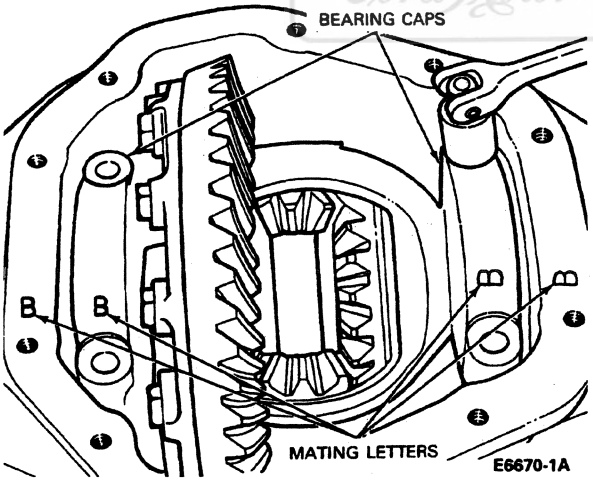

E6670-1A

17. Check ring gear and pinion backlash in three equally spaced points with dial indicator.
    a. Backlash tolerance is 0.13-0.23 mm (0.005-0.009 inch) and cannot vary more than 0.05 mm (0.002 inch) between points checked.
    b. High backlash is corrected by moving the ring gear closer to the pinion.
    c. Low backlash is corrected by moving ring gear away from the pinion.
    d. These corrections are made by switching differential bearing shims from one side of the differential case to the other.

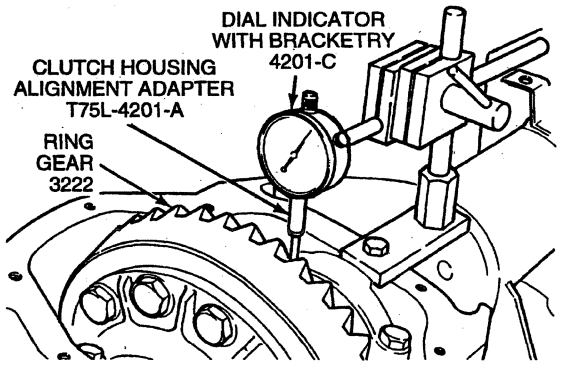

DE0485-A

18. Obtain a gear tooth contact pattern. Check gear tooth contact pattern prior to complete reassembly. Refer to Section 05-00.
19. The cover face of the carrier and the flat surface of the axle housing cover (4033) must be free of any oil film or foreign material.

    Apply RTV Silicone Rubber Sealer D6AZ-19562-AA (clear) or -BA (black) sealant or equivalent meeting Ford specifications ESB-M4G92-A or ESE-M4G195-A to surface of the axle housing cover. Make sure the sealer bead (3.18-6.35 mm [1/8-1/4 inch] high and wide) is laid on the inside of the cover screw holes. The bead is not to pass through the holes or outside of the holes.

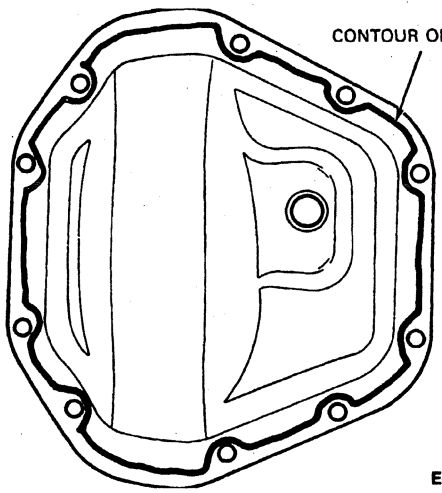

E6667-1A

20. Install two cover screws into axle housing cover at 8 o'clock and 2 o'clock positions. Use these two holes to guide axle housing cover into position on the carrier.
21. NOTE: Allow one hour curing time before filling carrier with the proper amount of specified lubricant and vehicle operation.

    Install remaining screws. Tighten alternately and evenly. Tighten screws to 41-54 N·m (30-40 lb-ft).

Officially Licensed Product
Ford Motor Company

DISASSEMBLY AND ASSEMBLY (Continued)

22. Install the axle shafts.
23. Install front axle to vehicle.

Gear Tooth Contact Pattern Check

Refer to Section 05-00.

Axle Shaft

SPECIAL SERVICE TOOL(S) REQUIRED

Description	Tool Number
U-Joint Tool	T74P-4635-C

Disassembly

1. Remove the axle shaft.
2. NOTE: Sometimes on disassembly, the spacer from the integral spacer / seal assembly will become separated from the front wheel spindle seal. Replacing the entire assembly is recommended.

   Remove the spindle thrust washer assembly from the axle shaft.

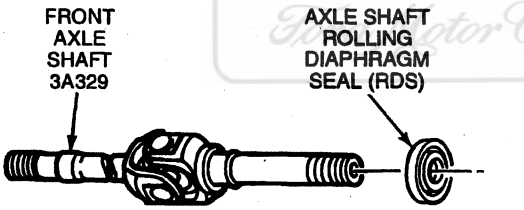

E6654-F

3. Remove the snap rings that retain the bearings in the yoke and axle shaft.
4. Position U-Joint Tool T74P-4635-C on the shaft and press the bearings out of the yoke. If the bearing cannot be pressed completely out of the yoke, remove the bearing with vise grip or channel lock pliers. Mark the yoke and shaft so they can be assembled in the same position.
5. Reposition the U-Joint Tool T74P-4635-C to press on the spider to remove the bearing from the opposite side of the yoke.
6. Remove the yoke from the spider.

Assembly

1. Position the spider in the axle shaft and press the bearing 6 mm (1 / 4 inch) below the axle shaft surface using Pinion Bearing Cone Remover D79L-4621-A or equivalent.
2. Remove the tool and install a new snap ring.
3. Start a new bearing on the opposite side of the axle shaft.
4. Install the U-Joint Tool T74P-4635-C and press the bearing until the snap ring of the opposite bearing contacts the axle shaft.
5. Remove the tool and install a new snap ring.
6. Install the yoke on the spider in position marked during disassembly.
7. Install two new bearings and snap rings in the yoke and spider in the same manner as the axle shaft.
8. **WARNING: DO NOT INSTALL AN AXLE SHAFT IF THE U-JOINT SHOWS SIGNS OF BINDING.**

   Check the U-joint for freedom of movement. If a binding condition results, tap the ears of the axle shaft sharply to relieve the binding.
9. Install the rubber rolling diaphragm seal on the axle shaft. The lip of the seal should face towards the front wheel spindle (3105). Lightly coat the lips of the axle shaft rolling diaphragm seal (RDS) and the mating surface of the front wheel spindle with High Temperature 4x4 Front Axle and Wheel Bearing Grease E8TZ-19590-A or equivalent meeting Ford specification ESA-M1C198-A.
10. Install axle shaft.

SPECIFICATIONS

LUBRICANT/ADHESIVE/CLEANER SPECIFICATIONS

Description	Part Number	Ford Specification
High Temperature 4x4 Front Axle and Wheel Bearing Grease	E8TZ-19590-A	ESA-M1C198-A
Premium Rear Axle Lubricant	XY-80W90-QL	WSP-M2C197-A
RTV Silicone Rubber Sealer	D6AZ-19562-AA (Clear) D6AZ-19562-BA (Black)	ESB-M4G92-A ESE-M4G195-A

LUBRICANT CAPACITIES

Approximate Capacities		
Liters	U.S. Pts.	Imp. Pts.
2.8	5.9	4.9

NOTE: Use Premium Rear Axle Lubricant, XY-80W90-QL or -KL or equivalent meeting Ford specification WSP-M2C197-A.

DANA AXLE ADJUSTMENTS

Description	Specification	
	mm	Inch
Backlash Between Ring Gear and Pinion	0.13-0.23	0.005-0.009
Backlash Maximum Variation Between Teeth	0.05	0.002
Pinion Bearing Preload (with New Bearings)	2.25-4.52 N-m	20-40 Lb-In

SPECIFICATIONS (Continued)

TORQUE SPECIFICATIONS

Description	N·m	Lb-Ft	Lb-In
Pinion Shaft Nut	298-379	220-280	—
Differential Bearing Capscrews	109-122	80-90	—
Ring Gear Bolts/Nuts (Grade 8)	136-162	100-120	—
Ring Gear Bolts/Nuts (Grade 9)	176-190	130-140	—
Oil Filler Plug	28-34	21-25	—
Cover-to-Housing Bolts	41-54	30-40	—
Spring Cap U-Bolt Nuts	113-153	83-113	—
Tracking Bar Nut and Bolt	70-100	52-74	—
Stabilizer Link Nut	21-33	15-24	—
Stabilizer Bar Bracket U-Bolt	48-68	35-50	—
Spindle Connecting Rod-to-Steering Knuckle Castellated Nut	70-100	52-74	—
Tie Rod-to-Steering Knuckle Nut	70-100	52-74	—
Lower Ball Joint Nut[a]	203	150	—
Upper Ball Joint Nut[a]	95	70	—
Spindle-to-Steering Knuckle Nuts	68-81	50-60	—
Outer Lock Nut, Manual Locking Hub	217-278	160-205	—
Inner Lock Nut, Manual Locking Hub	While rotating front disc brake hub and rotor, tighten to 68 N·m (50 lb-ft) to seat wheel bearings. Back nut off 90 degrees (1/4 turn). Tighten to 1.8 N·m (16 lb-in).		
Wheel Retainer (Nut), Automatic Locking Hub	While rotating front disc brake hub and rotor, tighten to 68 N·m (50 lb-ft) to seat wheel bearings. Back nut off 90 degrees (1/4 turn). Tighten to 1.8 N·m (16 lb-in).		

a Requires specific tightening sequence for proper installation. Refer to Ball Joint installation procedure in this section.

SPECIAL SERVICE TOOLS/EQUIPMENT

SPECIAL SERVICE TOOLS REQUIRED

Tool Number/ Description	Illustration
T50T-100-A Impact Slide Hammer	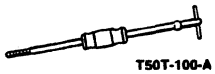 T50T-100-A
T56T-4616-B Pinion Bearing Cup Replacer	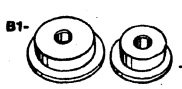 B1- -B2 T56T-4616-B

(Continued)

SPECIAL SERVICE TOOLS REQUIRED (Cont'd)

Tool Number/ Description	Illustration
T56T-4676-B Pinion Seal Replacer	T56T-4676-B
T57T-4851-B Companion Flange Holding Tool	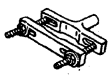 T57T-4851-B
T64P-3590-F Pitman Arm Puller	T64P-3590-F
T65L-4851-B Companion Flange Remover	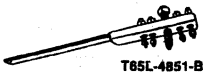 T65L-4851-B
T74P-4635-C U-Joint Tool	T74P-4635-C
T75L-1165-B Axle Bearing/Seal Plate	T75L-1165-B
T75L-1165-DA Axle Bearing/Seal Replacer	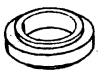 T75L-1165-DA
T75L-4201-A Clutch Housing Alignment Adapter	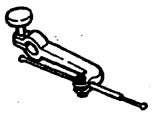 ST1664-B
T75T-1176-A Threaded Drawbar	T75T-1176-A
T77F-1102-A Bearing Cup Puller	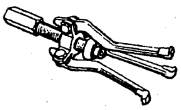 T77F-1102-A

(Continued)

Ford Licensed Product

SPECIAL SERVICE TOOLS/EQUIPMENT (Continued)

SPECIAL SERVICE TOOLS REQUIRED (Cont'd)

Tool Number/ Description	Illustration
T77L-9533-B Jet Plug Remover	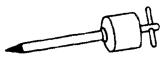 T77L-9533-B
T79P-4020-A Pinion Depth Gauge	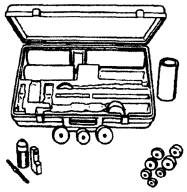 T79P-4020-A
T80T-3010-A 4WD Ball Joint Set	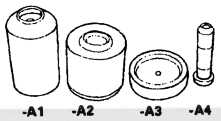 -A1 -A2 -A3 -A4 T80T-3010-A
T80T-4000-R Spindle Bearing Replacer	 T80T-4000-R
T80T-4000-W Driver Handle	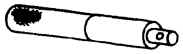 T80T-4000-W
T80T-4020-A Truck Pinion Depth Gauge	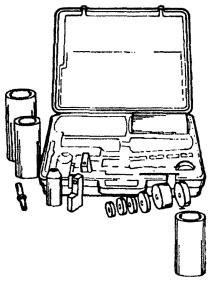 T80T-4020-A
T83T-3132-A1 Spindle/Axle Seal Replacer	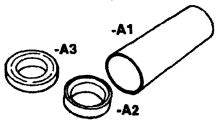 -A1 -A3 -A2 T83T-3132-A

(Continued)

SPECIAL SERVICE TOOLS REQUIRED (Cont'd)

Tool Number/ Description	Illustration
T85T-4851-AH Companion Flange Replacer	 T85T-4851-AH
T92T-3010-A Ball Joint Remover/Replacer (Outside)	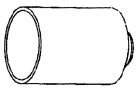 T92T-3010-A
T92T-3010-B Ball Joint Remover/Replacer (Inside)	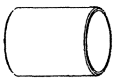 T92T-3010-B
T92T-4000-A Spindle Seal Replacer	 T92T-4000-A
T95T-3132-B Shaft Seal Replacer	T95T-3132-B 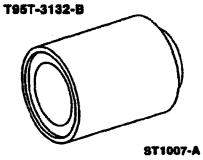 ST1007-A

SPECIAL SERVICE TOOLS DESIRED

Tool Number	Description
D78P-4201-B	Dial Indicator/Magnetic Base
D79L-4621-A	Pinion Bearing Cone Remover
D80L-100-H	Actuator Pin
D80L-100-U	Collet (1-1/2 to 1-3/4 Inch)
D80L-100-W	Bridge Assembly
D80L-630-7	Step Plate Adapter
D80T-4020-F48	Gauge Tube
D81L-4000-A	Driver Handle
D81L-4220-A	Pinion and Carrier Bearing Puller
D81T-3010-A1	Ball Joint Remover/Replacer (Part of Ball Joint Adapter Set D81T-3010-A)
D81T-3010-A3	Ball Joint Removal/Replacer (Part of Ball Joint Adapter Set D81T-3010-A)
D81T-3010-A4	Ball Joint Removal/Replacer (Part of Ball Joint Adapter Set D81T-3010-A)
D81T-3010-A5	Receiver Cup (Part of Ball Joint Adapter Set D81T-3010-A)
D81T-4221-A	Differential Bearing Cone Replacer
D81T-4222-DR	Dummy Differential Bearings
D81T-4628-A	Pinion Bearing Cup Remover
D81T-4628-D	Pinion Bearing Cup Remover
TOOL-1175-AC	Seal Remover

(Continued)

Official Licensed Product Ford Motor Company

SPECIAL SERVICE TOOLS/EQUIPMENT (Continued)

SPECIAL SERVICE TOOLS DESIRED (Cont'd)

Tool Number	Description
TOOL-4000-E	Differential Housing Spreader
TOOL-4201-C	Dial Indicator with Bracketry
TOOL-4858-E	Companion Flange Replacer

ROTUNDA EQUIPMENT

Model	Description
164-R3510	Heavy Duty Truck Transmission Jack

Official Licensed Product
Ford Motor Company

SECTION 05-03C Wheel Hubs and Bearings, Front Wheels, 4-Wheel Drive

SUBJECT	PAGE
VEHICLE APPLICATION	05-03C-1
DESCRIPTION AND OPERATION	
Locking Hubs	05-03C-1
DIAGNOSIS AND TESTING	
Inspection and Verification	05-03C-2
Automatic Locking Hubs	05-03C-2
Manual Locking Hubs	05-03C-2
Road Test	05-03C-2
Pinpoint Test	05-03C-3
Symptom Chart	05-03C-3
REMOVAL AND INSTALLATION	
Locking Hubs, Automatic	05-03C-6
REMOVAL AND INSTALLATION (Cont'd.)	
Locking Hubs, Manual	05-03C-4
DISASSEMBLY AND ASSEMBLY	
Wheel Grease Seal and Bearing, Front	05-03C-8
Replacement and Repacking	05-03C-8
ADJUSTMENTS	
Front Wheel Bearing	05-03C-9
Automatic Locking Hubs	05-03C-9
Manual Locking Hubs	05-03C-10
SPECIFICATIONS	05-03C-11
SPECIAL SERVICE TOOLS/EQUIPMENT	05-03C-12

VEHICLE APPLICATION

F-250 Heavy Duty and F-350

Official Licensed Product Ford Motor Company

DESCRIPTION AND OPERATION

Locking Hubs

The hublocks automatically or manually actuate the front driving axle. When actuated, the hublock body locks the hub and wheel (1007) and tire assembly to the halfshaft (3A329). When released, the axle shaft is disengaged from the front disc brake hub and rotor (1102) and the wheel rotates freely on the front wheel spindle (3105).

F-350 4x4 vehicles equipped with dual wheel rear axles (4001) have the outer wheels and tires attached with integral two-piece swiveling lug nuts (1012).

NOTE: For disassembly and assembly procedures for rear hubs (1109) and rear wheel bearings on Ford full-floating rear axles, refer to Section 05-02A.

WARNING: DO NOT ATTEMPT TO USE OLDER VEHICLE LUG NUTS (CONE-SHAPED, ONE-PIECE) TO REPLACE THE INTEGRAL TWO-PIECE SWIVELING LUG NUTS. PRE-1985 LUG NUTS CAN COME LOOSE DURING VEHICLE OPERATION. DO NOT ATTEMPT TO USE OLDER VEHICLE WHEELS, WHICH HAVE CONE-SHAPED LUG NUT SEATS, ON THIS VEHICLE. DO NOT ATTEMPT TO USE THE NEW DESIGN WHEELS AND LUG NUTS ON PAST MODEL WHEEL HUBS AS THIS CAN LEAD TO DAMAGE TO THE WHEEL MOUNTING SYSTEM AND COULD RESULT IN WHEELS COMING LOOSE DURING OPERATION.

Buzzing and ratcheting noises were a constant concern with older 4x4 vehicles. These noises occurred usually when shifting into 4-wheel drive after starting a vehicle that had been sitting cold for several hours. The noises would also occur just after shifting from 4-wheel drive to 2-wheel drive. Cold weather was another factor that produced the noise concerns. Colder temperatures increased the viscosity of the axle lubricant, resulting in a much higher torque requirement for the transfer case clutch that could only rotate the pinion gears enough to cause the hubs to partially lock, which resulted in a ratcheting noise.

The newer vehicles, however, use a 75W axle lubricant with low viscosity and a transfer case clutch with a higher output. Both innovations allow for 4x4 operation in extreme temperature conditions.

DESCRIPTION AND OPERATION (Continued)

Noise concerns in 2-wheel drive, just after shifting from 4-wheel drive, can occur if one of the hublocks fails to disengage. As the vehicle moves forward, the one hublock that has failed to disengage will rotate its axle shaft through the differential and attempt to rotate the other axle shaft in the opposite direction. As the opposite shaft turns in the reverse direction, the hublock will attempt to engage, which will result in a ratcheting or buzzing noise.

This type of noise concern is usually found on axles that have very few 4x4 miles on them. As the front axle accumulates a minimum of 250 miles of locked hub operation, the axle will break in, which reduces the amount of resistance. To accomplish this, engage 4-wheel drive and then shift out of it without disengaging the hubs. This will break in the axle when driven. Should the vehicle be put in reverse gear during this time period, the hubs will disengage and will have to be locked again by repeating the engagement procedure.

The manual locking hubs must be engaged and disengaged by hand. To engage the hubs for 4-wheel drive, grasp the locking bar in the center of the hub and rotate it clockwise to the LOCK position. The arrow on the locking bar must line up with the marker on the hub at the LOCK position. To disengage the hubs for 2-wheel drive, grasp the locking bar and rotate it counterclockwise toward the FREE position until the arrow on the locking bar is lined up with the marker on the hub at the FREE position.

Manual Locking Hub

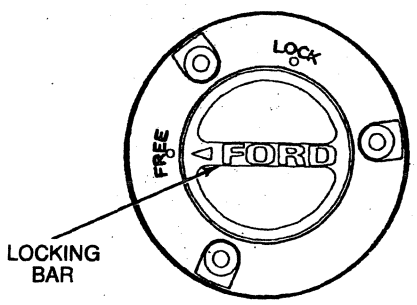

E9798-A

DIAGNOSIS AND TESTING

Inspection and Verification

Manual Locking Hubs

1. Place the transfer case (7A195) in 2-wheel drive and raise the front wheels (1007) off the ground. When in the unlocked position, the wheels should be able to turn freely.
2. Lock each of the front hubs and rotate the front wheels. The additional load of the drivetrain components should be felt once the hub has been engaged. In addition, the axles or front driveshaft or both should be moving along with the wheel.
3. Disengage the hubs and repeat the procedure to check that the hubs have smoothly disengaged.

Automatic Locking Hubs

NOTE: While the vehicle is hoisted, shift into 4-wheel drive from a dead stop and not while rear wheels are rotating in order to avoid slamming the hub locks into the lock position.

1. Raise vehicle on a hoist so that all wheels are off the ground.
2. Start engine (6007) with vehicle in neutral and transfer case in 2-wheel drive. Front wheels should spin freely by hand.
3. Put transfer case in 4WD and put vehicle in gear. Front and rear wheels should rotate together.
4. Put vehicle in neutral and spin front wheels by hand in the forward direction. The front axles or front driveshaft or both should rotate with the wheels. The additional load of the drivetrain components should be felt once the hub has been engaged.
5. To disengage the hubs, spin the wheels in the opposite direction until an audible click is heard.
6. Spin wheels forward again. They should rotate freely without the axle and driveshaft rotating.
7. Repeat the procedure, only shift into 4-wheel drive and put the vehicle in reverse. This time the hubs should release when the front wheels are spun in the forward direction.

Road Test

1. When checking front hubs for proper operation, road test the vehicle to make sure the hubs will remain engaged while under load. This is accomplished by engaging 4-wheel drive and taking the vehicle through several turns (both forward and backward) on dry pavement. This will put an additional load on the front wheel at the outside of the turn because it is traveling the greatest distance.
2. Drive through several turns while traveling in different directions to make sure that both sides of the hub teeth have been tested under load. Hubs that are not sufficiently engaged will pop out when loaded. This is due to the driveline releasing windup and is an indication of hub malfunction.
3. If slippage is suspected, mark the tire and axle shaft with chalk (after locking the hub) and apply a heavy torque load several times. Then inspect your original indexing marks. If they are no longer aligned, the hubs are not remaining locked when under load and will have to be replaced.
4. Should hublocks become submerged in water or mud for a long period of time, water could get past the seals and into the hubs and axle.
   a. Expel all water from the system.

Ford Motor Company Licensed Product

DIAGNOSIS AND TESTING (Continued)

b. Drain the axle by loosening the axle cover. For the F-250, refill the axle with 4x4 Gear Oil F1TZ-19580-A meeting Ford specification WSL-M2C191-A (F1TZ-19580-A has no equivalent). For the F-350, use Axle Lubricant C6AZ-19580-E or equivalent meeting Ford specification ESW-M2C105-A.

c. Disassemble the hubs, repack the wheel bearings using procedures in this section and dry off the hublocks.

d. Reassemble hubs. Refer to Section 05-03A or Section 05-03B for replacement of outer axle shaft seals or spindle inner seal and bearing.

Symptom Chart

FRONT AXLE NOISES IN FOUR-WHEEL DRIVE

Condition	Possible Source	Action
• Ratcheting or Buzzing Noise in Front Axle in Two-Wheel Drive, After Four-Wheel Drive Usage	• Right or left side hublock.	• VERIFY complaint. • REFER to inspection and verification as previously described in this section.
• Popping Sound from Front Axle While in Four-Wheel Drive	• Right or left side hublock.	• VERIFY complaint. • REFER to inspection and verification as previously described in this section.
• Noise from Front Axle While Engaging Four-Wheel Drive	• Right or left side hublock.	• VERIFY complaint. • REFER to Pinpoint Test A.

Official Licensed Product
Ford Motor Company

Pinpoint Test

PINPOINT TEST A: NOISE WHILE ENGAGING FOUR-WHEEL DRIVE

Test Step		Result	Action to Take
A1	VERIFY FRONT AXLE BREAK-IN		
	• Verify vehicle was driven 250 miles or more in 4-wheel drive. • **Has vehicle been driven at least 250 miles in 4-wheel drive?**	Yes ▶ No ▶	GO to **A2**. Break in front axle by driving at least 250 miles with hub locked. GO to **A2**.
A2	VERIFY LUBRICANT		
	• Verify front axle differential lubricant is 1.8 liters (61 oz.) of 4x4 Gear Oil F1TZ-19580-A meeting Ford specification WSL-M2C191-A for the F-250. NOTE: There is no equivalent for F1TZ-19580-A. Do not substitute any other lubricant. For the F-350, verify front axle lubricant is 2.8 liters (94 oz.) of Axle Lubricant C6AZ-19580-E or equivalent meeting Ford specification ESW-M2C105-A. • **Is lubricant to specifications?**	Yes ▶ No ▶	GO to **A3**. REPLACE differential lubricant with 1.8 liters (61 oz.) of 4x4 Gear Oil F1TZ-19580-A meeting Ford specification WSL-M2C191-A. For the F-350, REPLACE front axle lubricant with 2.8 liters (94 oz.) of Axle Lubricant C6AZ-19580-E or equivalent meeting Ford specification ESW-M2C105-A. GO to **A3**.
A3	VERIFY HUBLOCKS ARE OPERATIONAL		
	• Verify that the hubs lock and unlock. Refer to Inspection and Verification. • **Do hublocks work properly?**	Yes ▶ No ▶	PERFORM road test. GO to **A4**. INSPECT right and left side hublocks and REPLACE as necessary. INSPECT associated camming and REPLACE camming if damaged. REPEAT **A3**. If hublock is satisfactory, GO to **A4**.
A4	VERIFY OUTPUT OF TRANSFER CASE CLUTCH		
	• **While performing vehicle road test, does vehicle shift to 4x4 mode with no buzzing or ratcheting noise?**	Yes ▶ No ▶	Service is complete. REPEAT road test. REFER to Section 07-07B.

REMOVAL AND INSTALLATION

Locking Hubs, Manual

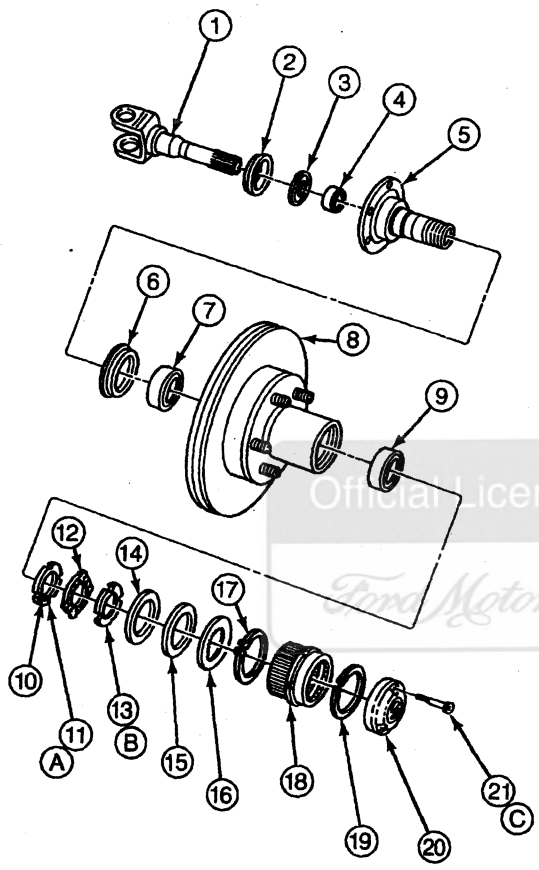

E9801-B

Item	Part Number	Description
1	3A329	Halfshaft
2	3C132	Rolling Diaphragm Seal (Axle)
3	3299	Integral Spacer Needle Bearing Seal
4	3123	Bearing, Caged Needle
5	3105	Front Wheel Spindle
6	1190	Wheel Hub Grease Seal
7	4221	Inner Wheel Bearing (with Bearing Cup 4222)
8	1102	Front Disc Brake Hub and Rotor
9	4221	Outer Wheel Bearing (with Bearing Cup 4222)

(Continued)

Item	Part Number	Description
10	—	Pin (Part of 1195)
11	1195	Inner Lock Nut
12	1198	Lockwasher
13	1197	Outer Lock Nut
14	—	Steel Thrust Washer (Part of 3B458)
15	—	Plastic Thrust Washer (Part of 3B458)
16	—	Splined Thrust Washer (Part of 3B458)
17	3B457	Snap Ring
18	1K105	Hub Body
19	—	Lock Ring (Part of 1K106)
20	1K104	Cap
21	1K104	Capscrew
A	—	While Rotating Front Disc Brake Hub and Rotor, Tighten Inner Lock Nut to 68 N·m (50 Lb-Ft) to Seat Bearings. Back Nut Off 90 Degrees (1/4 Turn).
B	—	Tighten to 217-278 N·m (160-205 Lb-Ft)
C	—	Tighten to 4-6 N·m (35-53 Lb-In)

Official Licensed Product
Ford Motor Company

Removal

1. Separate cap assembly from hub body by removing the three Torx® head capscrews.

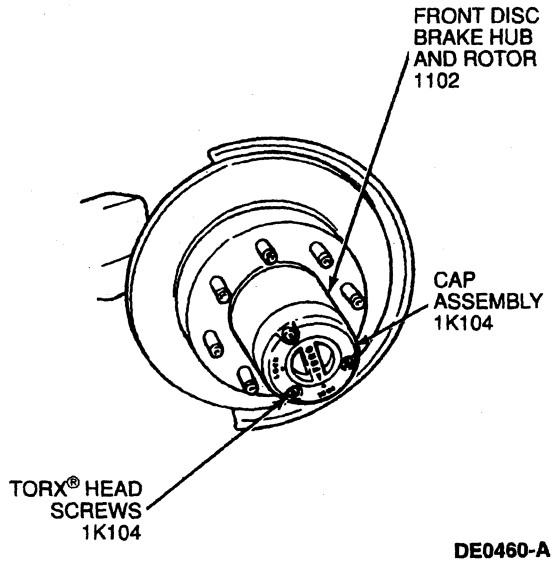

DE0460-A

REMOVAL AND INSTALLATION (Continued)

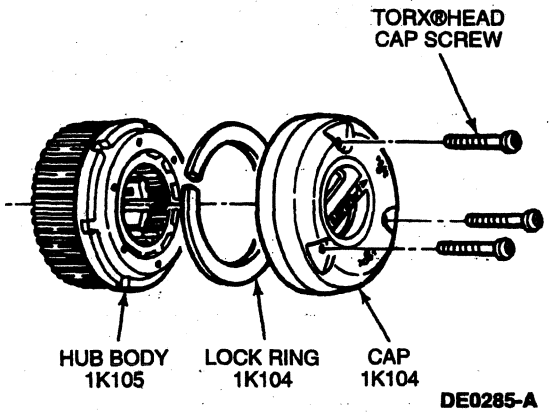

2. Remove the lock ring seated in the groove of the front disc brake hub and rotor (1102).

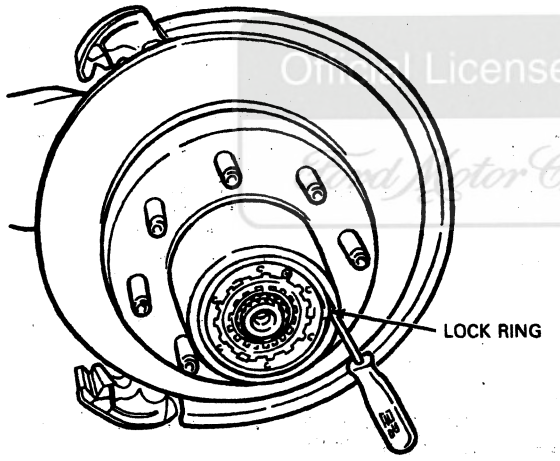

3. Remove the hub body assembly from the front disc brake hub and rotor. If the body is difficult to remove, install two capscrews and pull the body assembly out of the front disc brake hub and rotor.

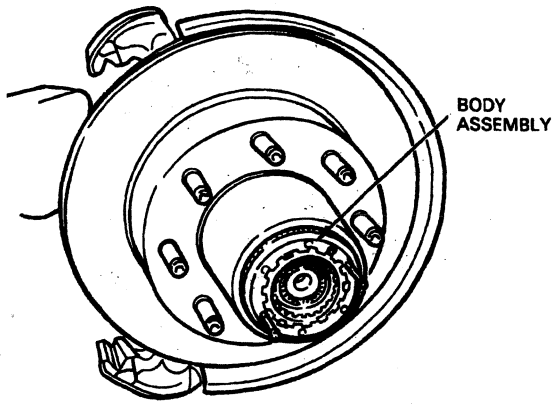

Installation

1. NOTE: Do not pack the hublock body assembly or cap with grease. Excessive grease can cause excessive dialing effort and hub failure.

   Follow removal procedure in reverse order.

2. Tighten three Torx® head capscrews to 4-6 N·m (35-53 lb-in).

Official Licensed Product
Ford Motor Company

REMOVAL AND INSTALLATION (Continued)

Locking Hubs, Automatic

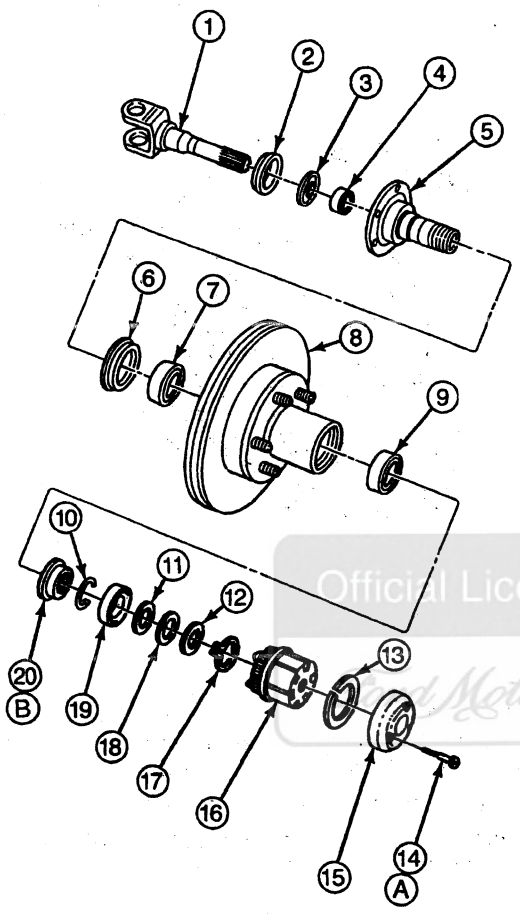

E9805-A

Item	Part Number	Description
1	3A329	Halfshaft
2	3C132	Rolling Diaphragm Seal (RDS), Axle
3	3299	Integral Spacer Needle Bearing Seal
4	3123	Bearing, Caged Needle
5	3105	Front Wheel Spindle

(Continued)

Item	Part Number	Description
6	1190	Wheel Hub Grease Seal
7	4221	Inner Wheel Bearing (with Bearing Cup 4222)
8	1102	Front Disc Brake Hub and Rotor
9	4221	Outer Wheel Bearing (Bearing Cup 4222)
10	3B549	Wheel Retainer Key
11	—	Steel Thrust Washer (Part of 3B458)
12	—	Splined Thrust Washer (Part of 3B458)
13	—	Lock Ring (Part of 1K106)
14	1K104	Capscrew
15	1K104	Cap
16	1K105	Hub Body
17	3B457	Snap Ring
18	—	Plastic Thrust Washer (Part of 3B458)
19	—	Cam Assy (Part of 1K105)
20	—	Wheel Retainer (Nut) (Part of 1K105)
A	—	Tighten to 4-6 N·m (35-53 Lb-In)
B	—	While Rotating Front Disc Brake Hub and Rotor, Tighten to 68 N·m (50 Lb-Ft) to Seat Wheel Bearings. Back Nut Off 90 Degrees (1/4 Turn). Tighten to 1.8 N·m (16 Lb-In)

Official Licensed Product Ford Motor Company

Removal

CAUTION: Do not drop hub components during removal and installation.

1. Separate cap from body assembly by removing the three capscrews from the cap, using Torx® bit TX25 or equivalent.
2. Remove cap.
3. Remove the lock ring seated in the groove of the front disc brake hub and rotor (1102).
4. Remove the body assembly from the front disc brake hub and rotor.

REMOVAL AND INSTALLATION (Continued)

Automatic Locking Hub, Disassembled View, Typical

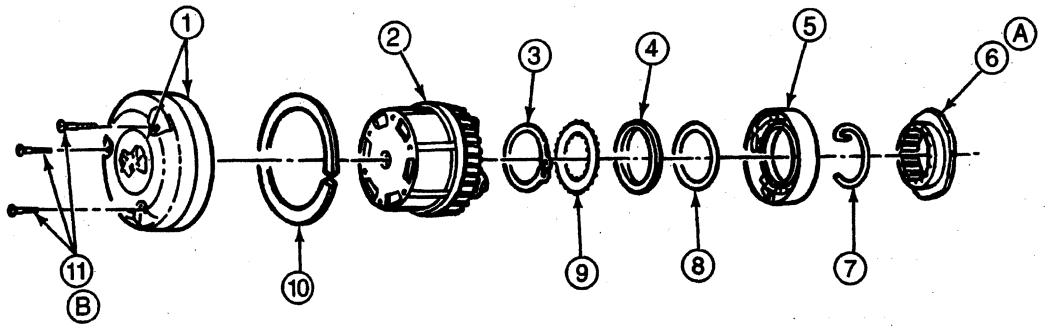

E9806-A

Item	Part Number	Description
1	1K104	Cap
2	1K105	Hub Body
3	3B457	Snap Ring
4	—	Plastic Thrust Washer (Part of 3B458)
5	—	Cam Assy (Part of 1K105)
6	—	Wheel Retainer (Nut) (Part of 1K105)
7	3B549	Wheel Retainer Key
8	—	Steel Thrust Washer (Part of 3B458)

Item	Part Number	Description
9	—	Splined Thrust Washer (Part of 3B458)
10	—	Lock Ring (Part of 1K104)
11	1K104	Capscrews (3)
A	—	While Rotating Front Disc Brake Hub and Rotor, Tighten Wheel Retainer (Nut) to 68 N·m (50 Lb-Ft) to Seat Wheel Bearings. Back Nut Off 90 Degrees (1/4 Turn). Tighten to 1.8 N·m (16 Lb-In).
B	—	Tighten to 4-6 N·m (35-53 Lb-In)

(Continued)

Ford Motor Company Licensed Product

5. Remove C-washer or snap ring from half shaft groove.
6. Remove spacers (three thrust washers) from shaft.
7. Remove cam assembly. Pull to remove.
8. If front disc brake hub and rotor and front wheel spindle (3105) are to be removed, refer to Wheel Grease Seal and Bearing, Front Replacement and Repacking, in the Disassembly and Assembly portion of this section.

Installation

1. Align the fixed cam retaining key on the cam assembly (garter spring inboard) with the keyway on the spindle. Firmly press the cam assembly on the wheel retainer nut.
2. **CAUTION: Improper sequence of three-piece thrust washers will result in excessive wear of assembly.**

   Install three-piece thrust washer set (first metal, second plastic, third splined) and snap ring. It may be necessary to push the axle outboard from backside of knuckle. Be sure snap ring is seated in groove properly.
3. **CAUTION: Rotate moving cam stop (use any one of three) to the one o'clock position in relationship to the fixed cam retaining key.**

   CAUTION: Do not force body assembly into front disc brake hub on rotor if body assembly will not fit. Recheck alignment of all components.

   NOTE: The hubs should not be packed with grease. Too much grease will damage the hubs and prevent proper operation.

   Install body assembly into vehicle front disc brake hub and rotor by lining up the three legs outside the hublock body with the three pockets in the cam assembly.
4. Make sure body assembly is in far enough to see groove in rotor tube. Install large lock ring into groove of hub. Be sure lock ring is correctly seated.
5. Install cap to body assembly. Install three capscrews and tighten to 4-6 N·m (35-53 lb-in).

DISASSEMBLY AND ASSEMBLY

Wheel Grease Seal and Bearing, Front Replacement and Repacking

SPECIAL SERVICE TOOL(S) REQUIRED

Description	Tool Number
Hub Nut Wrench	T95T-1197-B
Bearing Cup Puller	T77F-1102-A
Impact Slide Hammer	T50T-100-A
Driver Handle	T80T-4000-W

CAUTION: Use of incompatible bearing lubricant could result in premature lubricant breakdown.

The recommended wheel bearing lubricant is the lithium-base grease High Temperature 4x4 Front Axle and Wheel Bearing Grease E8TZ-19590-A or equivalent meeting Ford specification ESA-M1C198-A.

Sodium-base grease is not compatible with lithium-base grease and should not be intermixed. Therefore, before lubricating front or rear wheel bearings (1225), thoroughly clean all old grease from the bearing and front disc brake hub and rotor (1102).

If bearing adjustment does not eliminate looseness or rough and noisy operation, clean and inspect the front disc brake hub and rotor and bearings. If bearing cups or the cone and roller assemblies are worn or damaged, replace.

Disassembly

1. Raise vehicle and install safety stands.
2. Remove the wheel and tire. Refer to Section 04-04 in the Body, Chassis Manual.
3. Remove the locking hubs.
4. **CAUTION: Do not let the disc brake caliper (2B120) hang only by the hose, or damage might occur to the hose or disc brake caliper.**

   Remove the disc brake caliper. Refer to Section 06-03 in the Body, Chassis manual. Securely wire the disc brake caliper to the frame.
5. For vehicles equipped with automatic locking hubs, remove C-ring or snap ring and three-piece thrust washers (spacers). Remove the cam assembly and wheel bearing nut retaining key. Remove wheel bearing retainer (nut) using Hub Nut Wrench T95T-1197-B.

   Repack the wheel bearings with the specified lubricant (grease).

HUB NUT WRENCH
T95T-1197-B
(AUTOMATIC LOCKING HUBS)

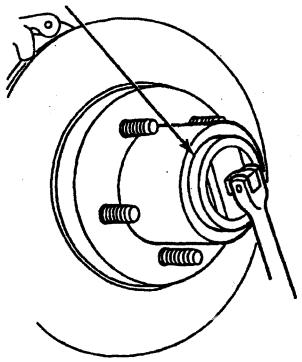

DE0189-A

For vehicles with manual locking hubs, remove snap ring, three-piece thrust washers (spacers), the outer lock nut, lockwasher, and inner lock nut using Spanner Locknut Wrench D85T-1197-A or equivalent.

SPANNER
LOCKNUT WRENCH
D85T-1197-A
(MANUAL LOCKING HUBS)

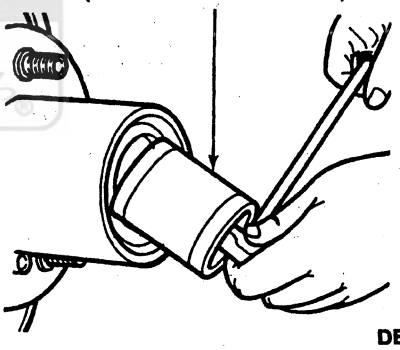

DE0188-A

Ford Motor Company

DISASSEMBLY AND ASSEMBLY (Continued)

6. Remove the front disc brake hub and rotor. The front outer wheel bearing will slide out as the hub is removed.

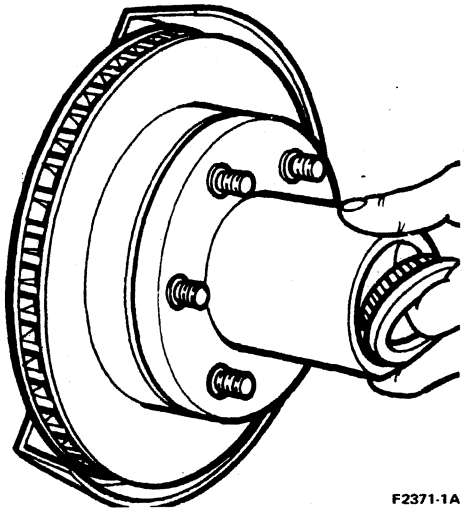

F2371-1A

7. Remove the retaining nuts of the front wheel spindle (3105). Carefully remove the front wheel spindle from the knuckle studs and halfshaft (3A329). If necessary, lightly tap the end of the spindle with a rawhide hammer to remove.
8. Clean old grease from the needle bearings and the bore seal of the front wheel spindle. To replace spindle bearing or inner seal, refer to Section 05-03A or Section 05-03B.
9. Clean any old grease or dirt from these parts and replace if signs of excessive wear are noted.

Assembly

1. Using High-Temperature 4x4 Front Axle and Wheel Bearing Grease E8TZ-19590-A or equivalent meeting Ford specification ESA-M1C198-A, thoroughly lubricate the needle bearing and coat the front wheel spindles or face that mates with the seals of the front wheel spindle.
2. Assemble the front wheel spindle over the halfshaft onto the knuckle studs. Tighten the retaining nuts to 68-81 N·m (50-60 lb-ft).
3. Remove the front inner wheel bearing, wheel hub grease seal (1190) from the front disc brake hub and rotor using Bearing Cup Puller T77F-1102-A and Impact Slide Hammer T50T-100-A. Inspect bearings and replace as necessary.
4. Inspect the bearing cups for pits or cracks. If necessary, remove with a drift. If new cups are installed, install new cones and rollers.
5. Lubricate the bearings with High Temperature 4x4 Front Axle and Wheel Bearing Grease E8TZ-19590-A or equivalent meeting Ford Specification ESA-M1C198-A. Clean all old grease from the front disc brake hub and rotor. Pack the cones and rollers. If a bearing packer is not available, work as much lubricant as possible between the rollers and the cages.
6. Position the front inner wheel bearing in the inner cup and install the new wheel hub grease seal using a hammer, Driver Handle T80T-4000-W and the proper seal installer.

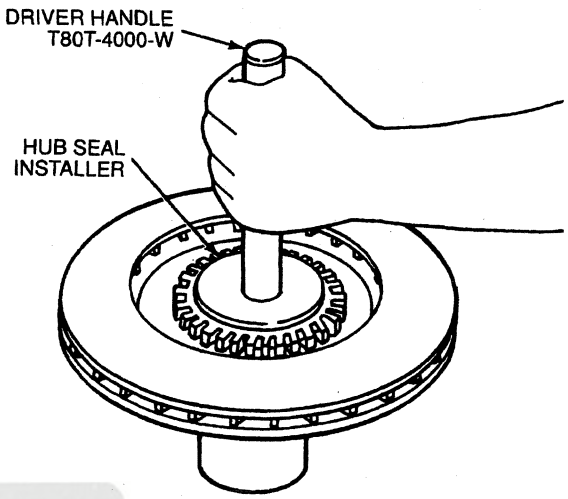

E9808-A

7. Carefully position the hub and disc assembly on the front wheel spindle.
8. Install the front outer wheel bearing, and wheel retainer nut or lock nuts and lockwashers.
9. Adjust the wheel bearings. Refer to Front Wheel Bearing in the Adjustments portion of this section.
10. For vehicles with automatic locking hubs, install cam assembly.
11. **CAUTION: Improper sequence of three-piece thrust washers will result in excessive wear of assembly.**

    Install three-piece thrust washers (first metal, second plastic, third splined) and C-ring or snap ring on the halfshaft groove.
12. Install calipers and pads. Refer to Section 06-03.
13. Install tire and wheel (1007). Refer to Section 04-04 in the Body, Chassis manual.
14. Install the locking hubs.
15. Remove the safety stands and lower the vehicle.

ADJUSTMENTS

Front Wheel Bearing

Automatic Locking Hubs

SPECIAL SERVICE TOOL(S) REQUIRED

Description	Tool Number
Hub Nut Wrench	T95T-1197-B

1. Raise the vehicle and install safety stands.

ADJUSTMENTS (Continued)

2. Remove the hublock assembly. Refer to Locking Hubs, Automatic in the Removal and Installation portion of this section.
3. Remove retaining lock ring or C-ring and three-piece thrust washers. Remove cam assembly and wheel nut retaining key (if not already removed).
4. Loosen wheel bearing retainer (nut) using Hub Nut Wrench T95T-1197-B. While rotating rotor and hub, retighten wheel bearing retainer (nut) to 68 N·m (50 lb-ft) to seat wheel bearings.

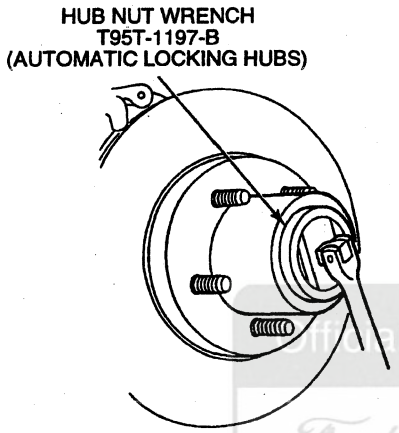

5. Back off nut 90 degrees (1/4 turn). Tighten wheel retainer nut to 1.8 N·m (16 lb-in). If necessary, tighten nut to next slot to allow installation of retainer key.
6. Install retaining key into the spindle keyway by inserting the short leg into the aligned slot in nut. Press all the way into position until curved portion of retaining key is seated into counterbore of wheel retainer (nut).

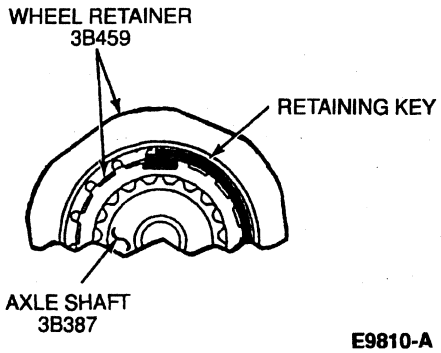

7. Install cam assembly.
8. **CAUTION: Improper sequence of three-piece thrust washers will result in excessive wear of assembly.**

   Install three washers in order: metal washer first, plastic washer second and splined washer last.
9. Install C-ring or lock ring. Align legs of cam assembly for installation of hub body.
10. Check that the final end play of the front disc brake hub and rotor on the front wheel spindle is 0.00-0.50 mm (0.000-0.002 inch).
11. **CAUTION: Excessive end play or torque greater than 2.3 N·m (20 lb-in) to rotate hub and rotor will result in excessive wear of wheel bearings.**

    Torque required to rotate the front disc brake hub and rotor is not to exceed 2.3 N·m (20 lb-in).
12. Install hublock. Tighten screws to 4-6 N·m (35-53 lb-in).
13. Remove safety stands. Lower vehicle.

Manual Locking Hubs

1. Raise the vehicle and install safety stands. Remove caliper and brake pads. Refer to Section 06-03 in the Body, Chassis Manual.
2. Remove the hublock assembly.
3. Remove C-ring and three-piece thrust washers (if not already removed).
4. Remove the outer lock nut with Spanner Locknut Wrench D85T-1197-A or equivalent. Remove the lockwasher and loosen inner lock nut.
5. Using spanner lock nut wrench while rotating the front disc brake hub and rotor (1102) back and forth, tighten the inner lock nut to 68 N·m (50 lb-ft) to seat the bearing.
6. Back off the lock nut 90 degrees.

Official Licensed Product
Ford Motor Company

ADJUSTMENTS (Continued)

7. NOTE: Hole pattern of lockwasher is offset with keyway to provide half-position settings by flipping washer over to obtain closest hole.

   Install the lockwasher so the key is positioned in the groove of the front wheel spindle (3105). Tighten the inner lock nut, aligning the pin into the nearest lockwasher hole.

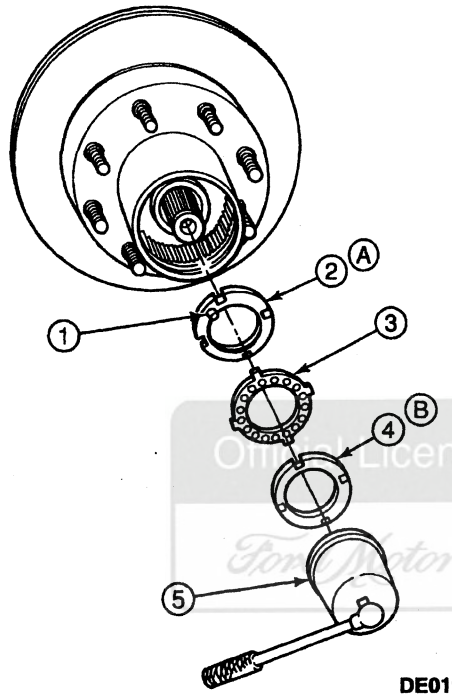

DE0190-A

Item	Part Number	Description
1	—	Pin (Part of 1195)
2	1195	Inner Lock Nut
3	1198	Lockwasher
4	1197	Outer Lock Nut
5	D85T-1197-A	Spanner Locknut Wrench (Models 50 and 60)
A	—	Tighten to 68 N·m (50 Lb-Ft). Back Off 90 Degrees.
B	—	Tighten to 217-278 N·m (160-205 Lb-Ft).

8. Install the outer lock nut and tighten to 217-278 N·m (160-205 lb-ft) using Spanner Locknut Wrench D85T-1197-A or equivalent.
9. Check the final end play of the front wheel spindle. It should be 0.00-0.05 mm (0.000-0.002 inch).
10. Torque required to rotate the front disc brake hub and rotor is not to exceed 2.3 N·m (20 lb-in).
11. **CAUTION: Improper sequence of three-piece thrust washers will result in excessive wear of assembly.**

    Install three washers in order: metal washer first, plastic washer second and splined metal washer third. Install C-ring.
12. Install the hublocks.
13. Install calipers and pads. Refer to Section 06-03.
14. Remove the safety stands. Lower the vehicle.

SPECIFICATIONS

LUBRICANT/ADHESIVE/CLEANER SPECIFICATIONS

Description	Part Number	Ford Specification
4x4 Gear Oil	F1TZ-19580-A	WSL-M2C191-A
High Temperature 4x4 Front Axle and Wheel Bearing Grease	E8TZ-19590-A	ESA-M1C198-A
Axle Lubricant	C6AZ-19580-E	ESW-M2C105-A

WHEEL TORQUE SPECIFICATIONS

Description	N·m	Lb-Ft
8-Lug Wheel, 9/16-18	170-230	126-170

NOTE: Torque specifications are for clean, dirt- and paint-free, dry bolt and nut threads. Never use oil or grease on studs or nuts.

WHEEL HUB SPECIFICATIONS

Description	Specifications
Front Disc Brake Hub and Rotor End Play	0.00-0.50 mm (0.000-0.002 Inch)
Torque to Rotate the Front Disc Brake Hub and Rotor	2.3 N·m (20 Lb-In) Maximum

TORQUE SPECIFICATIONS

Description	N·m	Lb-Ft	Lb-In
Torx® Head Capscrews	4-6	—	35-53
Retaining Nuts, Front Wheel Spindle-to-Knuckle	68-81	50-60	—
Wheel Retainer (Bearing Adjusting Nut) — Automatic Hublock	68[a]	50[a]	—
Inner Lock Nut, Front Wheel Bearing — Manual Hub Lock	68[b]	50[b]	—
Outer Lock Nut, Front Wheel Bearing — Manual Hub Lock	217-278	160-205	—

a After tightening to specified torqued, back lock nut off 90 degrees (1/4 turn) and torque 1.8 N·m (16 lb-in).
b After tightening to specified torque, back lock nut off 90 degrees (1/4 turn).

Officially Licensed Product Ford Motor Company

SPECIAL SERVICE TOOLS/EQUIPMENT

SPECIAL SERVICE TOOLS REQUIRED

Tool Number/ Description	Illustration
T50T-100-A Impact Slide Hammer — 2-1/2-Lb	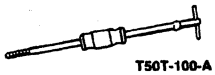 T50T-100-A
T77F-1102-A Bearing Cup Puller (Use with Slide Hammer)	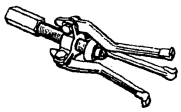 T77F-1102-A
T80T-4000-W Driver Handle	T80T-4000-W
T95T-1197-B Hub Nut Wrench	T95T-1197-B 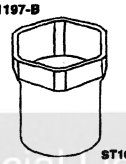 ST1006-A

SPECIAL SERVICE TOOLS DESIRED

Tool Number	Description
D85T-1197-A	Spanner Locknut Wrench

Official Licensed Product
Ford Motor Company

GROUP

TRANSMISSION 07

SECTION TITLE	PAGE
CLUTCH PEDAL POSITION (CPP) SWITCH	07-14-1
TRANSFER CASE, 4X4 SYSTEM, SERVICE	07-07A-1
TRANSFER CASE, HEAVY-DUTY, MANUAL SHIFT	07-07C-1
TRANSFER CASE, MANUAL SHIFT	07-07B-1
TRANSMISSION, AUTOMATIC, E4OD	07-01-1
TRANSMISSION, AUTOMATIC, COOLING	07-02-1
TRANSMISSION, AUTOMATIC, EXTERNAL CONTROLS	07-05-1
TRANSMISSION, MANUAL, MODEL S5-47 ZF	07-03-1

SECTION 07-01 Transmission, Automatic, E4OD

Official Licensed Product

SUBJECT	PAGE
VEHICLE APPLICATION	07-01-2
DESCRIPTION AND OPERATION	
Bushings, Bearings and Thrust Washers Locator	07-01-10
Identification Tag	07-01-3
Main Components and Functions	07-01-14
Seals, Rings and Gaskets Locator	07-01-12
Transmission Control Switch (TCS) and Lamp Operation	07-01-14
Transmission Description	07-01-2
Transmission Electronic Control System	07-01-22
Transmission Range Selection	07-01-13
Transmission Shift Patterns	07-01-14
Transmission, Disassembled View	07-01-5
DIAGNOSIS AND TESTING	
After On-Board Diagnostics	07-01-38
Before Pinpoint Tests	07-01-39
Diagnosis by Symptom	07-01-80
Diagnosis by Symptom Index	07-01-80
Diagnostic Flowchart	07-01-29
Diagnostic Strategy	07-01-28
Diagnostic Trouble Code Chart	07-01-39
Diagnostics	07-01-35
Know/Understand the Concern	07-01-30
Leakage Inspection	07-01-76
On-Board Diagnostics with NGS	07-01-35
Pinpoint Tests	07-01-53
Transmission Vehicle Harness Connectors	07-01-53
Preliminary Inspection	07-01-29
Special Testing Procedures	07-01-72
Air Pressure Tests	07-01-74
Test Procedures	07-01-74
Test Results	07-01-75
Engine Idle Speed Check	07-01-72
Line Pressure Test	07-01-72
Stall Speed Test	07-01-73
Torque Converter Drainback Test	07-01-75
Transmission Fluid Cooler	07-01-79
Transmission Fluid Cooler and Cooler Tubes Flushing and Cleaning	07-01-79
DIAGNOSIS AND TESTING (Cont'd.)	
Transmission Tester	07-01-45
Verification of Condition	07-01-30
IN-VEHICLE SERVICE	
Extension Housing Gasket	07-01-120
Extension Housing Seal and Bushing	07-01-118
Fluid Cooler Lines	07-01-126
Fluid Pan, Gasket and Filter	07-01-129
Heat Shield	07-01-128
Main Control Valve Body	07-01-110
Manual Control Lever Shaft Seal	07-01-121
Park System	07-01-131
Shift Linkage Check	07-01-110
Transmission Fluid Drain and Refill	07-01-108
REMOVAL	
Transmission	07-01-132
DISASSEMBLY	
Disassembly/Reassembly of Subassemblies	07-01-152
Center Support	07-01-179
Coast Clutch Assembly	07-01-166
Direct Clutch Assembly and Intermediate Brake Drum	07-01-180
Extension Housing	07-01-195
Forward Clutch Assembly	07-01-186
Forward Hub and Ring Gear	07-01-179
Forward Planet Assembly	07-01-192
Front and Rear Case Bushings	07-01-152
Input Shell	07-01-193
Intermediate Band Assembly and Intermediate Brake Band Servo Assembly	07-01-179
Intermediate/Overdrive Cylinder Assembly	07-01-175
Low One-Way Clutch Assembly	07-01-195
Main Control Valve Body	07-01-155
Output Shaft	07-01-192
Overdrive Ring Gear and Center Shaft Assembly	07-01-170
Pump Assembly	07-01-158
Reverse Clutch	07-01-195

SECTION 07-01 Transmission, Automatic, E4OD

SUBJECT	PAGE
DISASSEMBLY (Cont'd.)	
Reverse Clutch Piston	07-01-197
Reverse Planet Assembly	07-01-195
Torque Converter Checks	07-01-197
Transmission	07-01-137
ASSEMBLY	
Transmission	07-01-200
INSTALLATION	
Transmission	07-01-223
CLEANING AND INSPECTION	
Case	07-01-228
Electrical Connectors	07-01-228
Forward, Direct, Intermediate, Overdrive, Coast and Reverse Clutches	07-01-228
Main Control Valve Body	07-01-227

SUBJECT	PAGE
CLEANING AND INSPECTION (Cont'd.)	
One-Way Clutch	07-01-228
Output Shaft	07-01-228
Planet Assemblies	07-01-228
Thrust Bearings	07-01-228
Torque Converter	07-01-228
Torque Converter and Fluid Cooler	07-01-227
Transmission	07-01-227
Transmission Fluid Cooler and Cooler Tubes Flushing and Cleaning	07-01-227
Transmission Fluid Cooler Tube Leakage	07-01-229
SPECIFICATIONS	07-01-229
SPECIAL SERVICE TOOLS/EQUIPMENT	07-01-232

VEHICLE APPLICATION

F-250 Heavy Duty, F-350 and F-Super Duty

DESCRIPTION AND OPERATION

Transmission Description

The E4OD features include:

- four speeds
- fully automatic
- electronically controlled

The main operating components include:

- torque converter clutch
- six multiple-disc friction clutches
- one band
- one sprag one-way clutch
- two roller one-way clutches that provide for the desired function of three planetary gearsets

Official Licensed Product Ford Motor Company

DESCRIPTION AND OPERATION (Continued)

E4OD Automatic Transmission — Sectional View

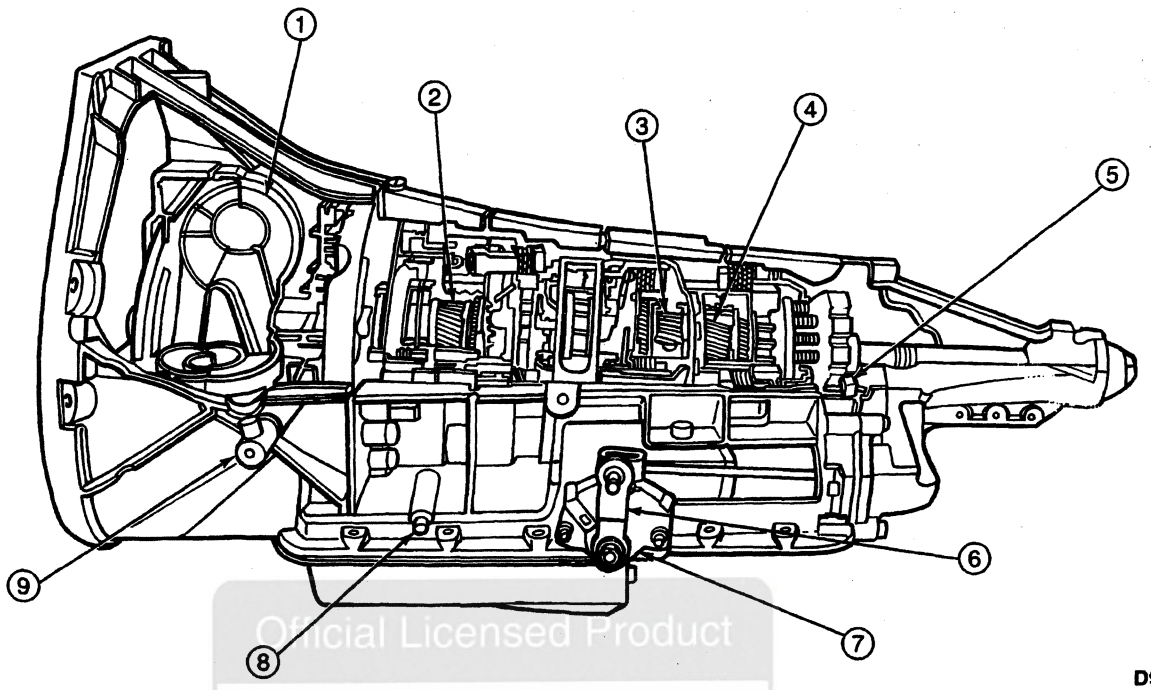

D9279-E

Official Licensed Product
Ford Motor Company

Item	Part Number	Description
1	7902	Torque Converter
2	7B446	Overdrive Planet Assy
3	7A398	Forward Planet
4	7D006	Reverse Planet Assy
5	7A441	Parking Pawl

(Continued)

Item	Part Number	Description
6	7A256	Manual Control Lever
7	7A247	Transmission Range (TR) Sensor
8	—	Line Pressure Tap (Part of 7005)
9	—	Shift Linkage Boss (Part of 7005)

Identification Tag

An identification tag is located on the left side of the transmission case (7005), rearward of the transmission range (TR) sensor.

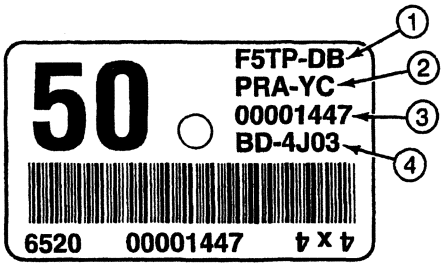

DD0735-A

Item	Description
1	Assembly Part Number Prefix and Suffix
2	Transmission Model
3	Serial
4	Build Date (Year, Month and Day). Refer to the following Build Date Codes chart.

Build Date Codes

Year	Code	Month	Code
1988	8	JAN.	A
1989	9	FEB.	B
1990	0	MAR.	C
1991	1	APR.	D
1992	2	MAY.	E
1993	3	JUN.	F
1994	4	JUL.	G

(Continued)

DESCRIPTION AND OPERATION (Continued)

Build Date Codes (Cont'd)

Year	Code	Month	Code
1995	5	AUG.	H
1996	6	SEP.	J
1997	7	OCT.	K
		NOV.	L
		DEC	M

Official Licensed Product
Ford Motor Company

DESCRIPTION AND OPERATION (Continued)

Transmission, Disassembled View

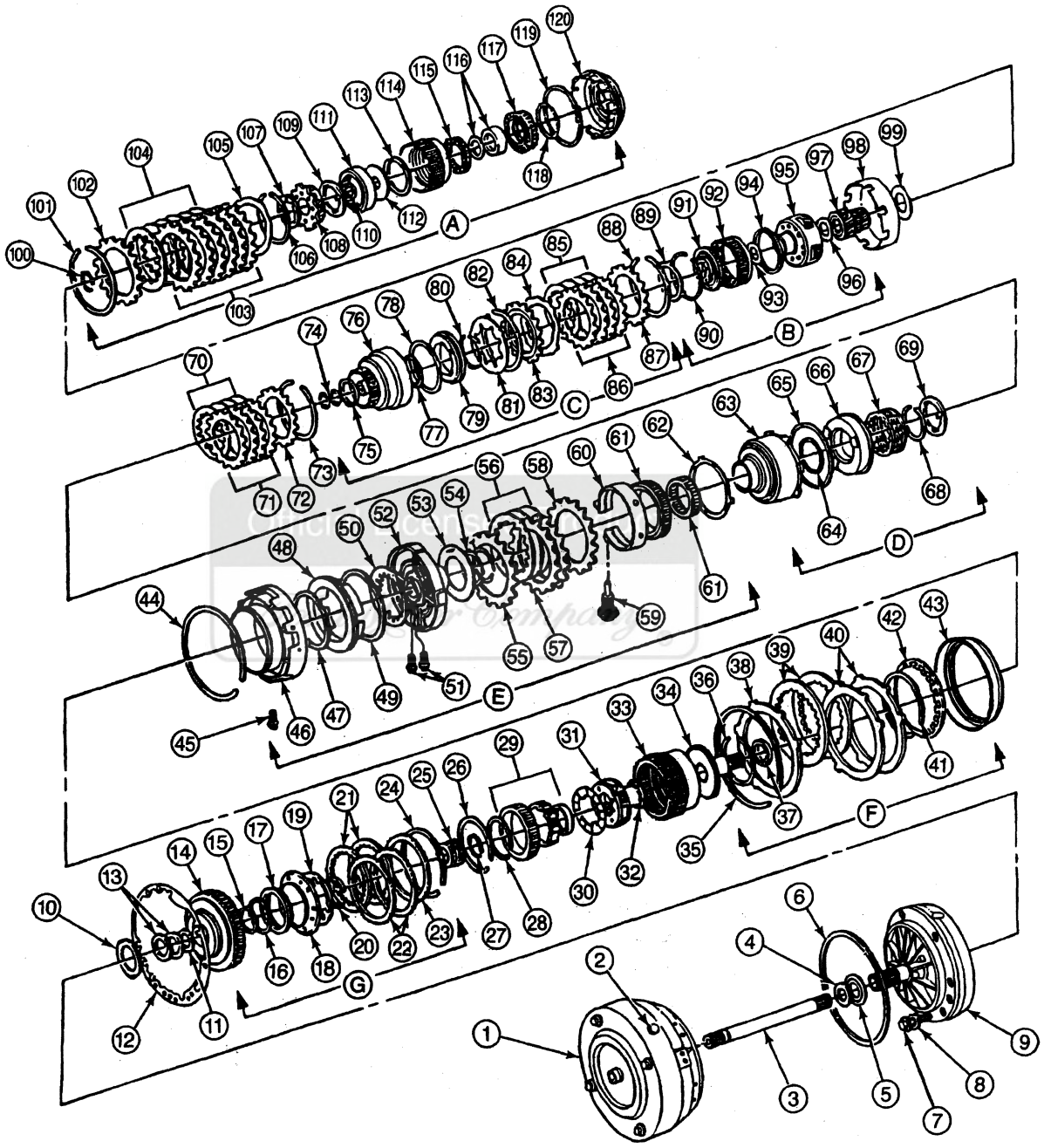

DD0736-A

DESCRIPTION AND OPERATION (Continued)

Transmission, Disassembled View (Continued)

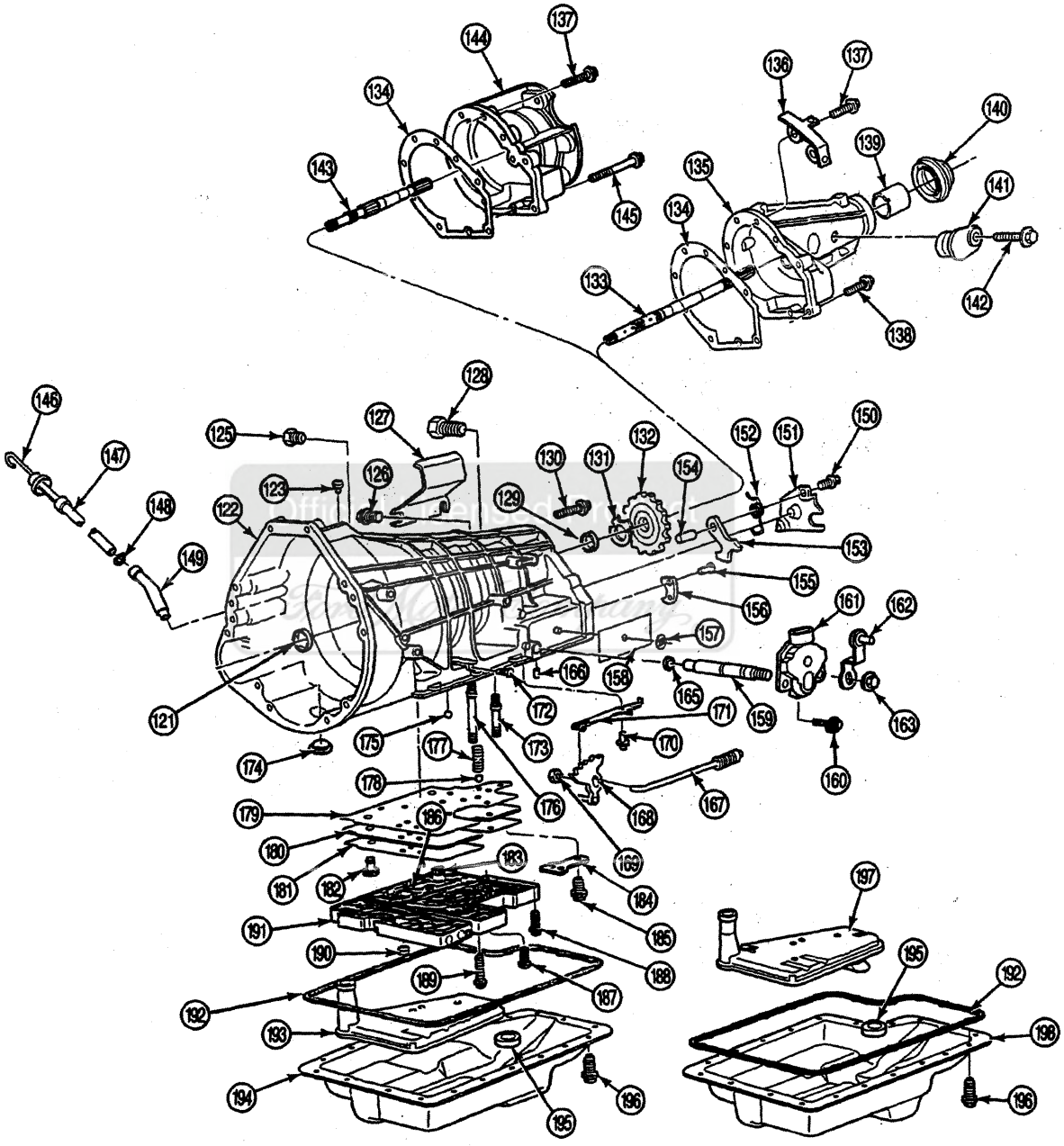

DESCRIPTION AND OPERATION (Continued)

Item	Part Number	Description
1	7902	Converter Assy
2	87650-S2	Plug — Converter Drain, 1/8-Inch-27
3	7017	Shaft — Input
4	7L323	Seal — Front Pump Stator Support
5	7A248	Seal — Front Pump
6	7A248	Seal — Front Pump (Square Cut)
7	N805260-S	Bolt and Washer Assy (Front Pump to Case)
8	7G379	Washer — Replacement (9 Req'd)
9	7A103	Pump Assy — Front
10	7D014	Washer — Pump Thrust No. 1
11	7E486	Bearing Assy — Overdrive Sun Gear No. 2
12	7A136	Gasket — Pump
13	7G402	Seal — Coast Clutch (2 Req'd)
14	7G387	Cylinder Assy — Coast
15	7A548	Seal — Coast Clutch — Inner
16	7A548	Seal — Coast Clutch — Outer
17	7A262	Piston — Coast Clutch
18	7N519	Ring — Coast Clutch Piston Apply
19	7B070	Spring — Coast Clutch Piston — Disc
20	7A527	Ring — Coast Clutch Disc Spring Retainer
21	7B164	Plate — Coast Clutch Internal Spline — Friction
22	7B442	Plate — Coast Clutch External Spline — Steel
23	7B066	Plate — Coast Clutch Pressure
24	7D483	Ring — Coast Clutch Pressure Plate Retaining (Selective Fit)
25	7D063	Gear Assy — Overdrive Sun
26	7G375	Ring — Retaining (Attaches Clutch Assy — Overdrive One-Way to Overdrive Ring Gear)
27	377300-S	Ring — Retaining (Attaches Gear Assy — Overdrive Sun to Cylinder Assy — Coast)
28	377135-S	Ring — Retaining (OWC to Outer Race)
29	7A089	Clutch Assy — Overdrive One-Way[a]
30	7L339	Washer — Overdrive — Overrun Clutch Thrust No. 3
31	7B446	Planet Assy — Overdrive
32	7F240	Bearing Assy — Overdrive Planet — Thrust No. 4
33	7A153	Gear — Overdrive Ring
34	7A658	Shaft — Overdrive Center
35	7D483	Ring — Overdrive CL Pressure Plate Retainer (Selective Fit)
36	7G375	Ring — Wavy Retaining (Retaining Center Overdrive Shaft Assy to Overdrive Ring Gear)

(Continued)

Item	Part Number	Description
37	7G178	Bearing Assy — Overdrive Center Shaft — Thrust No. 5
38	7B066	Plate — Overdrive Clutch Pressure
39	7B164	Plate — Overdrive Clutch Internal Spline — Friction
40	7B442	Plate — Overdrive Clutch External Spline — Steel
41	7A527	Ring — Overdrive Clutch Disc Spring — Retaining
42	7B070	Spring — Overdrive Clutch Piston Disc
43	7A262	Piston and (Bonded) Seal Assy — Overdrive Clutch
44	7D483	Ring — Intermediate Cylinder Retaining (Selective Fit)
45	7Z059	Bolt — M10-1.5 x 24 mm Overdrive Cylinder Fluid Feed
46	7G384	Cylinder — Overdrive and Intermediate Clutch
47	7F225	Seal — Intermediate Clutch Piston — Inner
48	7E005	Piston — Intermediate Clutch
49	7F224	Seal — Intermediate Clutch Piston — Outer
50	7B070	Spring — Intermediate Clutch Piston — Disc
51	7Z059	Bolt — M12-1.75 x 31 mm Center Support Fluid Feed (2 Req'd)
52	7A130	Support Assy — Center
53	7L326	Washer — Center Support Thrust No. 6
54	7D025	Seal — Direct Clutch (2 Req'd)
55	7B066	Plate — Intermediate Clutch Pressure — Apply
56	7B164	Plate — Intermediate Clutch Internal Spline — Friction
57	7B442	Plate — Intermediate Clutch External Spline — Steel
58	7B066	Plate — Intermediate Clutch Pressure — Rear
59	7D021	Servo Assy — Intermediate Brake Band
60	7D034	Band Assy — Intermediate
61	7A089	Clutch Assy — Intermediate One-Way[a]
62	7G401	Washer — Intermediate One-Way Clutch — Thrust No. 7
63	7D044	Drum Assy — Intermediate Brake
64	7A548	Seal — Direct Clutch Piston — Inner
65	7A548	Seal — Direct Clutch Piston — Outer
66	7A262	Piston Assy — Direct Clutch
67	7F235	Retainer and Spring Assy — Direct Clutch
68	7C122	Ring — Direct Clutch Support Spring Retaining

(Continued)

Unauthorized Ford Motor Company

DESCRIPTION AND OPERATION (Continued)

Item	Part Number	Description
69	7C096	Washer — Intermediate Brake Drum — Thrust No. 8A
70	7B164	Plate — Direct Clutch Internal Spline — Friction
71	7B442	Plate — Direct Clutch External Spline — Steel
72	7B066	Plate — Direct Clutch Pressure
73	377126-S	Ring — Direct Clutch Pressure Plate Retaining (Selective Fit)
73	377127-S	Ring — Retaining
73	377128-S	Ring — Retaining
73	377437-S	Ring — Retaining
74	7D019	Seal — Forward Clutch Cylinder (2 Req'd)
75	7F374	Bearing Assy — Forward Clutch Needle — Thrust No. 8B
76	7A360	Cylinder Assy — Forward Clutch
77	7A548	Seal — Forward Clutch Piston — Inner
78	7A548	Seal — Forward Clutch Piston — Outer
79	7A262	Piston Assy — Forward Clutch
80	7D256	Ring — Forward Clutch Piston Spring
81	7B070	Spring — Forward Clutch Piston Disc
82	377127-S	Ring — Forward Clutch Spring (FWD CL Piston Spring to FWD CL Cylinder Assy)
83	7B066	Plate — Forward Clutch Pressure
84	7E085	Spring — Forward Clutch Pressure
85	7B164	Plate — Forward Clutch Internal Spline — Friction
86	7B442	Plate — Forward Clutch External Spline — Steel
87	7B066	Plate — Forward Clutch Pressure — Rear
88	377127-S	Ring — Forward Clutch Pressure Plate Retaining (Selective Fit)
88	377437-S	Ring — Retaining
88	377444-S	Ring — Retaining
88	386841-S	Ring — Retaining
88	386842-S	Ring — Retaining
89	7D090	Washer — Forward Clutch Hub — Thrust No. 8C
90	377132-S	Ring — Forward Hub Retaining (FWD Ring Gear Hub to FWD Ring Gear)
91	7B067	Hub — Forward Ring Gear
92	7D392	Gear — Forward Ring
93	7D234	Bearing Assy — Forward Clutch Thrust (Between FWD Ring Gear and FWD Planet Assy) No. 9A
94	7A166	Bearing Assy — Forward Planet Carrier — Thrust No. 10A
95	7A398	Planet Assy — Forward

(Continued)

Item	Part Number	Description
96	7D234	Bearing Assy — Forward Clutch Thrust (Between FWD Planet Assy and FWD Sun Gear Assy) No. 9B
97	7D063	Gear Assy — Forward/Reverse Sun
98	7D064	Shell — Input
99	7D066	Washer — Input Shell Thrust No. 14
100	377300-S	Ring — Retaining (Attaches FWD/REV Sun Gear Assy to Input Shell)
101	7D483	Ring — Reverse Clutch Pressure Plate — Retaining
102	7B066	Plate — Reverse Clutch Pressure
103	7B442	Plate — Reverse Clutch External Spline — Steel
104	7B164	Plate — Reverse Clutch Internal Spline — Friction
105	7E085	Spring — Trans Reverse Clutch Cushion
106	377155-S	Ring — Reverse Planet Retaining
107	7A166	Washer — Planet Carrier Thrust (Between Reverse Planet Assy and Input Shell) No. 10B
108	7D006	Planet Assy — Reverse
109	7A166	Washer — Planet Carrier — Thrust (Between Reverse Planet Assy and Output Shaft Hub) No. 11
110	387031-S	Ring — Retaining (Retaining Output Shaft Hub to Output Shaft Assy)
111	7A153	Gear — Output Shaft Ring
112	7D164	Hub — Output Shaft*
113	377132-S	Ring — Retaining (Retaining Output Shaft Hub to Output Shaft Ring Gear)
114	7B067	Hub Assy — Reverse Clutch
115	7A089	Clutch Assy — Reverse One-Way
116	7G178	Low/Reverse One-Way Clutch Inner Race and Thrust Bearing Assy No. 12
117	7D406	Retainer and Spring Assy — Reverse Clutch
118	7D404	Seal — Reverse Clutch Piston — Inner
119	7D403	Seal — Reverse Clutch Piston — Outer
120	7D402	Piston — Reverse Clutch
121	7025	Bushing — Case — Front (3 Lube Grooves)
122	7005	Case Assy
123	7034	Vent Assy — Case
125	7D273	Connector Assy — Fluid Tube — Inlet (Front)
126	N605770-S36	Bolt (Attaches Heat Shield to Case)
127	7A434	Heat Shield
128	7D174	Valve Assy — Converter Drain Back Check (Rear)

(Continued)

Official Licensed Product

DESCRIPTION AND OPERATION (Continued)

Item	Part Number	Description
129	7025	Bushing — Case — Rear (1 Lube Groove)
130	7D167	Bolt, 5/16 x 1.9 (One-Way Clutch to Case) (5 Req'd)
131	7B368	Washer — Parking Gear Thrust — Rear No. 13
132	7A233	Gear — Output Shaft — Parking
133	7060	Output Shaft Assy
134	7086	Gasket — Extension Housing
135	7A039	Extension Housing
136	7H102	Bracket — Wiring[b]
137	N605803-S427	Bolt — Extension Assy to Case (Top) (7 Req'd)
138	N605802-S427	Bolt — Extension Housing to Case (Bottom) (2 Req'd)
139	7A034	Bushing — Extension Housing
140	7052	Seal — Extension Housing
141	7H183	Plug Assy — Extension Housing
142	57621-S2	Screw and Washer Assy — 1/4-20 x 0.62 (Plug Assy to Extension Housing)
143	7060	Output Shaft Assy (4x4)
144	7A039	Extension Assy (4x4 and Super Duty)
145	N606569-S427	Bolt — Ext Assy to Case (Super Duty and 4x4) Bottom
146	7A020	Indicator Assy — Fluid Level
147	7A228	Tube Assy — Fluid Filler
148	391308-S	O-Ring — Filler Tube
149	7A160	Tube Fluid Inlet — Short
150	N805232-S	Screw and Washer Assy M8-1.25 x 23.8 (Attaches 7D419 to 7005)
151	7D419	Plate — Parking Rod Guide
152	7D070	Spring — Parking Pawl Return
153	7A441	Pawl — Parking
154	7D071	Shaft — Park Pawl
155	N805261-S191	Bolt — M8-1.25 x 25.9 mm (Attaches Park Pawl Act Abutment to Case)
156	7G101	Abutment — Parking Pawl Actuating
157	372552-S2	Nut — 3/8 Spring (Attaches Service ID Tag to Case)
158	7B148	Tag — Transmission Service ID[b]
159	7C493	Shaft — Manual Control Lever[c]
160	N811382-S100	Bolt Assy — Transmission Range Sensor to Case (2 Req'd)
161	7A247	Sensor — Transmission Range[c]
162	7A256	Lever Assy — Manual Control[c]
163	N620482-S2	Nut — M10 x 1.5 Hex Manual Lever (Attaches Manual Lever to Case[c])
165	7B498	Seal — Manual Control Lever
166	7B210	Pin — Manual Lever Retaining
167	7A232	Rod Assy — Parking Pawl Actuating

(Continued)

Item	Part Number	Description
168	7A115	Lever — Manual Control Valve Detent — Inner
169	N800287-S36	Nut M14-1.5 Hex Inner Detent Lever (7A115 to 7A256)
170	N805503-S	Bolt — Manual Valve Detent Spring Assy to Case
171	7E332	Spring Assy — Manual Valve Detent
172	390685-S	Plug — Test Port — 1/8-27 Hex-Head[b]
173	N805330-S	Stud — Valve Body Assy to Case — Solenoid Valve Body to Case — Accumulator Body Assy to Case
174	7N171	Plug — Converter Access
175	7E195	Ball — Rubber Check (8 Req'd)
176	N805331-S	Stud — Main Control Assy to Case
177	7D017	Spring — EPC Blow-Off
178	353351-S	Ball — EPC Blow-Off
179	7C155	Gasket — Valve Body Separator Plate
180	7A008	Plate — Valve Body Separator
181	7D100	Gasket — Valve Body Separator Plate to Case
182	7G308	Screen Assy — Solenoid
183	7A100	Valve Body Assy
184	7F282	Plate — Valve Body Reinforcing[b]
185	N805503-S	Bolt — Valve Body Reinforcing Plate to Case (3 Req'd)
186	7G391	Solenoid Valve Body — Transmission Control
187	N805329-S	Bolt — Solenoid Valve Body to Case (9 Req'd)
188	N805326-S	Bolt — Valve Body Assy to Case and Accumulator Body Assy to Case (18 Req'd)
189	N805327-S	Bolt — Valve Body Assy to Case
190	N805328-S	Nut — Valve Body Assy to Case — Solenoid Valve Body to Case — Accumulator Body Assy to Case
191	7G422	Control Assy — Accumulator Body
192	7A191	Reusable Gasket — Transmission Pan
193	7A098	Screen and Seal Assy — Transmission Pan[a]
194	7A194	Pan Assy — Transmission (4x2)
195	7L027	Magnet — Transmission Pan[b]
196	N811266-S427	Bolt — Pan Assy to Case (20 Req'd)
197	7A098	Screen and Seal Assy — Transmission (4x4)[a]
198	7A194	Pan Assy — Transmission (4x4)
A	—	Reverse Clutch and Planetary
B	—	Forward Planetary
C	—	Forward Clutch

(Continued)

Unlicensed Product Ford Motor Company

DESCRIPTION AND OPERATION (Continued)

Item	Part Number	Description
D	—	Direct Clutch
E	—	Intermediate Clutch

(Continued)

Item	Part Number	Description
F	—	Overdrive Clutch
G	—	Coast Clutch

a Available only in a kit.
b Not available separately.
c Model dependent.

Bushings, Bearings and Thrust Washers Locator

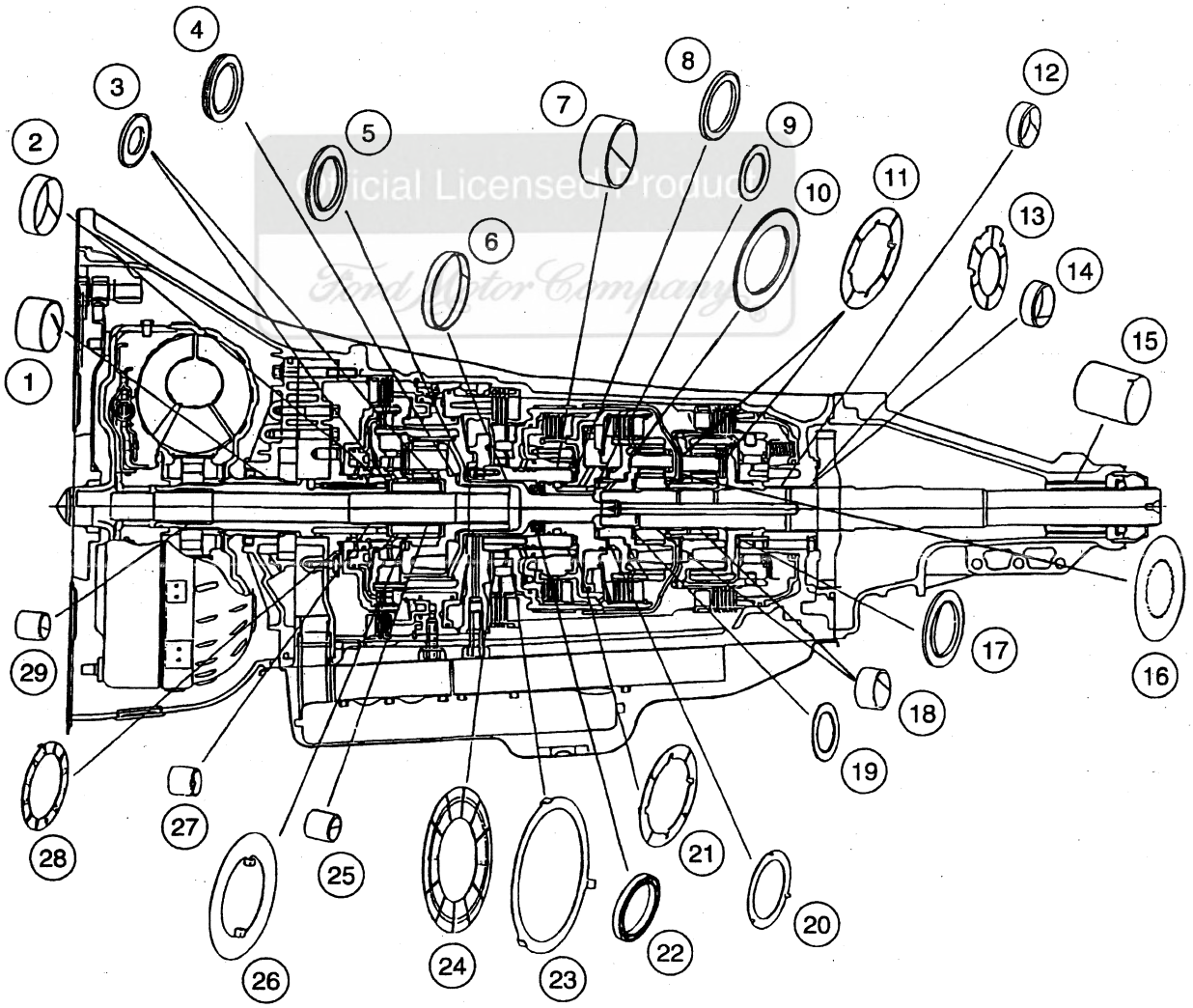

DD0661-A

DESCRIPTION AND OPERATION (Continued)

Item	Part Number	Description
1	7B258	Front Pump Bushing
2	—	Coast Clutch Bushing (Part of 7G387)
3	7E486	Overdrive Sun Gear (Front/Rear) Thrust Bearing (2A) (2B)
4	7F240	Overdrive Carrier to Center Shaft Thrust Bearing (4)
5	7G178	Center Shaft to Center Support Thrust Bearing (5)
6	—	Intermediate Brake Drum Front Bushing (Part of 7D044)
7	—	Intermediate Brake Drum Rear Bushing (Part of 7D044)
8	7F374	Forward Clutch Hub to Center Support Hub Thrust Bearing (8B)
9	7D234	Forward Carrier (Front) Thrust Bearing (9A)
10	7A166	Planet Carrier Needle Bearing (10A)
11	7A166	Planet Carrier Thrust Washer (10B) (11)
12	7025	Front Case Bushing
13	7B368	Parking Gear Thrust Washer (13)
14	7025	Rear Case Bushing
15	7A034	Extension Housing Bushing

(Continued)

Item	Part Number	Description
16	7D066	Input Shell Thrust Washer(14)
17	7G178	Output Shaft Hub Rear Thrust Bearing (12)
18	—	Forward/Reverse (Front/Rear) Sun Gear Bushing (Part of 7D063)
19	7D234	Forward Carrier (Rear) Thrust Bearing (9B)
20	7D090	Forward Clutch Hub Thrust Washer (8C)
21	7C096	Intermediate Brake Drum Thrust Washer (8A)
22	—	Ball Bearing — Center Shaft (Part of 7A130)
23	7G401	One-Way Clutch to Intermediate Brake Drum Thrust Washer (7)
24	7L326	Center Support Thrust Washer (6)
25	—	Overdrive Sun Gear Bushing (Part of 7D063)
26	7L339	Overdrive — Overrun Clutch Thrust Washer (3)
27	—	Front Pump Support Rear Bushing (Part of 7A103)
28	7D014	Front Pump Support Thrust Washer (1)
29	—	Front Pump Support Front Bushing (Part of 7A103)

Ford Licensed Product Motorcraft Company

DESCRIPTION AND OPERATION (Continued)

Seals, Rings and Gaskets Locator

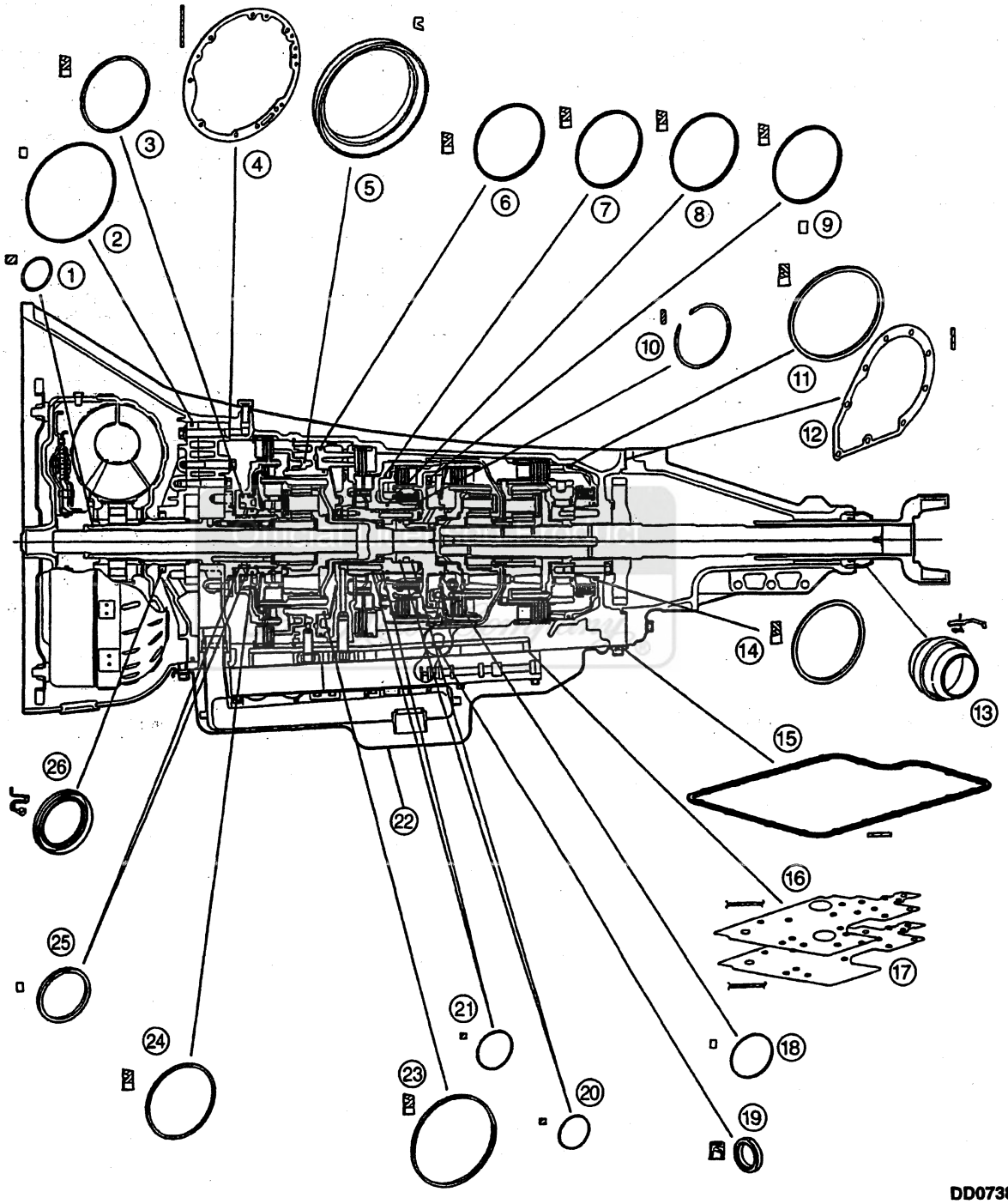

DESCRIPTION AND OPERATION (Continued)

Item	Part Number	Description
1	7L323	Front Pump Stator Support Seal
2	7A248	Front Pump Square Cut OD Seal
3	7A548	Coast Clutch Inner Seal
4	7A136	Pump Gasket
5	7A262	Overdrive Clutch Piston and Seal Assy
6	7F224	Intermediate Clutch Piston Outer Seal
7	7A548	Direct Clutch Outer Seal
8	7A548	Direct Clutch Inner Seal
9	7A548	Forward Clutch Piston Outer Seal
10	7C122	Direct Clutch Support Spring Retaining Ring
11	7D403	Reverse Clutch Piston Outer Lip Seal
12	7086	Extension Housing Gasket
13	7052	Extension Housing Seal

(Continued)

Item	Part Number	Description
14	7D404	Reverse Clutch Piston Inner Lip Seal
15	7A191	Reusable Transmission Pan Gasket
16	7C155	Case to Separator Plate Gasket
17	7D100	Separator Plate to Control Body Gasket
18	7A548	Forward Clutch Piston Inner Seal
19	7B498	Manual Control Lever Seal
20	7D019	Forward Clutch Cylinder Seal (2 Req'd)
21	7D025	Direct Clutch Seal (2 Req'd)
22	391308-S	Fluid Filler Tube O-Ring
23	7F225	Intermediate Clutch Piston Inner Seal
24	7A548	Coast Clutch Outer Seal
25	7G402	Coast Clutch Ring Seal, Teflon® (2 Req'd)
26	7A248	Front Pump Seal Assy

Official Licensed Product
Ford Motor Company

Transmission Range Selection

The E4OD shift lever has six positions: PARK, REVERSE, NEUTRAL, OVERDRIVE, MANUAL 2 and MANUAL 1.

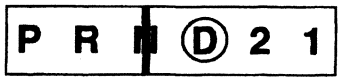

D17022-A

(P) PARK

WARNING: ALWAYS APPLY THE PARKING BRAKE AFTER, AND IN ADDITION TO, SHIFTING THE TRANSMISSION INTO PARK.

CAUTION: Select PARK position only when the vehicle is at a complete stop.

In PARK position:

- there is no powerflow through the transmission (7003).
- the output shaft (7060) is mechanically locked.
- vehicle movement is prevented.
- the engine can be started.
- the ignition key can be removed.

(R) REVERSE

In REVERSE position:

- the vehicle can be operated in a rearward direction at a reduced gear ratio.

(N) NEUTRAL

In NEUTRAL position:

- there is no powerflow through the transmission.
- the output shaft is not locked to the case (7005).

(D) OVERDRIVE

NOTE: Each time the ignition switch (11572) is switched from OFF to the ON position, the transmission will automatically provide overdrive operation regardless of transmission control switch (TCS) position when the vehicle was last run.

The OVERDRIVE position:

- is used for most driving conditions.
- provides maximum fuel economy for most driving conditions.
- provides all automatic shifts.
- application and release of the torque converter clutch occurs.

DESCRIPTION AND OPERATION (Continued)

(D) DRIVE — Transmission Control Switch (TCS) Activated

NOTE: Each time the ignition switch is switched from OFF to the ON position, the transmission will automatically provide overdrive operation regardless of TCS position when the vehicle was last run.

The DRIVE position:

- is used when traveling in hilly / mountainous terrain or when going into a strong headwind.
- provides automatic shifts through first three gears.
- application and release of the torque converter clutch occurs.

MANUAL 2

The MANUAL 2 position:

- holds second gear from start-up.
- MANUAL 2 selection at vehicle speeds above approximately 56 km / h (35 mph) results in temporary third gear followed by an automatic downshift to second gear below 56 km / h (35 mph), providing engine braking.

MANUAL 1

The MANUAL 1 position:

- is used for maximum engine braking.
- holds first gear from start-up.
- MANUAL 1 selection at vehicle speeds above approximately 56 km / h (35 mph) [48 km / h (30 mph) for diesel engines] results in an automatic downshift to second gear. An automatic downshift to first gear will occur below approximately 56 km / h (35 mph) [48 km / h (30 mph) for diesel engines].

Transmission Shift Patterns

Upshifts

Transmission upshifting is controlled by the powertrain control module (PCM)(12A650). The powertrain control module receives inputs from various engine or vehicle sensors and driver demands to control shift scheduling, shift feel and torque converter clutch operation.

Downshifts

Under certain conditions the transmission (7003) will downshift automatically to a lower gear range (without moving the range selector lever). There are three categories of automatic downshifts: coastdown, torque demand and forced or kickdown shifts.

Coastdown

The coastdown downshift occurs as the name indicates, when the vehicle is coasting down to a stop.

Torque Demand

The torque demand downshift occurs (automatically) during part-throttle acceleration when the demand for torque is greater than the engine can provide at that gear ratio.

Kickdown

For maximum acceleration, the driver can force a downshift by pressing the accelerator pedal to the floor. A forced downshift into a lower gear (third, second or first) is possible below calibrated speeds. For all shift speeds, specifications are subject to variations due to tire size, engine and transmission calibration requirements.

Transmission Control Switch (TCS) and Lamp Operation

The transmission control switch is a momentary contact switch. When the switch is pressed, a signal is sent to the powertrain control module (PCM)(12A650). The powertrain control module then energizes the transmission control indicator lamp and the coast clutch solenoid, applying the coast clutch to provide engine braking, and cancels fourth gear operation. The TCIL indicates overdrive cancel mode activated (lamp on), electronic pressure control circuit shorted or monitored sensor failure (lamp flashing).

Main Components and Functions

Torque Converter

The torque converter (7902) is a four-element converter. It contains the standard three elements that transmit and multiply torque:

- impeller
- turbine
- reactor

The torque converter clutch increases fuel economy.

The torque converter components operate as follows:

- Rotation of the converter housing and impeller set the fluid in motion.
- The turbine reacts to the fluid motion from the impeller, transferring rotation to the geartrain.
- The reactor redirects fluid going back into the impeller, allowing for torque multiplication.

The addition of a torque converter clutch to the torque converter provides a mechanical link between the converter housing and the engine, allowing for direct transfer of power from the engine to the geartrain.

Official Licensed Publication Ford Motor Company

DESCRIPTION AND OPERATION (Continued)

The torque converter clutch is applied and released by fluid pressure, which is controlled by the powertrain control module (PCM)(12A650) through a torque converter clutch solenoid (TCC solenoid) in the solenoid body assembly.

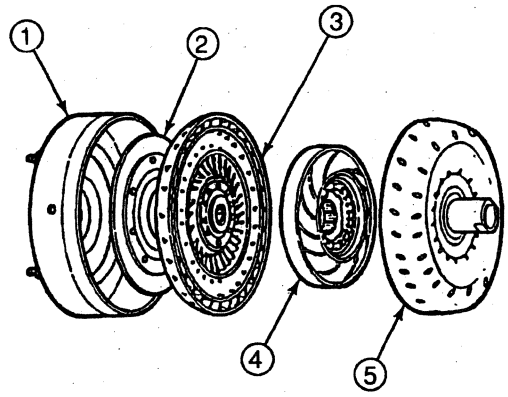

DD0739-A

Item	Part Number	Description
1	—	Cover (Part of 7902)
2	—	Pressure Plate (Part of 7902)
3	—	Turbine (Part of 7902)
4	—	Reactor (Part of 7902)
5	—	Impeller (Part of 7902)

Impeller and Cover

The primary functions of the impeller and cover assembly are to transmit engine torque to the turbine or the converter pressure plate, contain hydraulic fluid, and provide a mating surface for the converter clutch pressure plate. In addition, the impeller hub drives the fluid pump gear.

Turbine

The turbine is a sectioned, donut-shaped steel stamping that is splined to the input shaft (7017). It is driven by fluid from the impeller and transmits this power to the geartrain. Because of its basic shape, the turbine automatically directs fluid back to the impeller.

Reactor

The reactor redirects the fluid flow returned to the impeller from the turbine so the fluid moves in the same direction as engine / impeller rotation. This action aids in torque multiplication because it adds torque to that already supplied by the engine. The reactor contains a one-way clutch that holds it stationary when torque multiplication is necessary, but allows freewheeling at higher speeds when torque multiplication is not necessary.

Torque Converter Clutch

The pressure plate attaches to the back of the turbine and can be applied against the cover to allow for a mechanical transfer of engine torque to the geartrain. This occurs mainly in third and fourth gears when torque multiplication is no longer necessary. (Converter clutch application can also occur in first and second gear under certain conditions.)

The pressure plate works much like a regular mechanical clutch. Application and release of the clutch are controlled by opposing fluid forces on each side of the pressure plate.

Torque Converter Sectional View

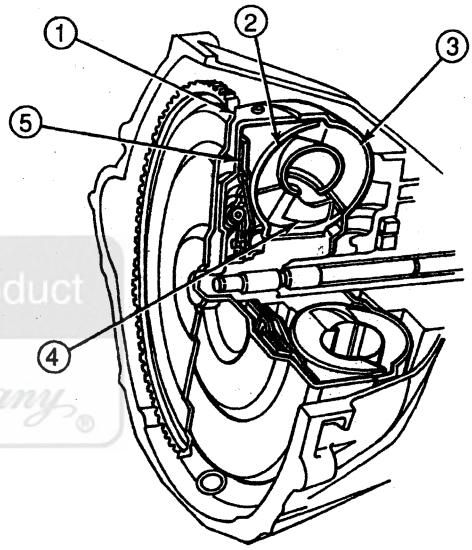

DD0740-A

Item	Part Number	Description
1	—	Torque Converter Cover (Part of 7902)
2	—	Turbine (Part of 7902)
3	—	Impeller (Part of 7902)
4	—	Reactor (Part of 7902)
5	—	Torque Converter Clutch (Part of 7902)

Geartrain

Input Shaft

The input shaft is supported by two bushings in the stator support. End positioning of the input shaft is controlled by the splines in the converter turbine and the overdrive planet assembly.

Output Shaft

The output shaft (7060) is supported by two bushings in the case (7005) and by the slip-yoke bushing in the extension housing. End positioning is controlled by the parking pawl gear and snap ring or shoulder and by the reverse ring gear hub and snap ring.

Official Licensed Product Ford Motor Company

DESCRIPTION AND OPERATION (Continued)

Overdrive System

The overdrive planetary system consists of the overdrive planet assembly, overdrive sun gear (7D063), overdrive ring gear, coast clutch cylinder, overdrive one-way clutch assembly and the center shaft, as shown in the following illustration. The overdrive planet assembly is splined to the input shaft. The overdrive sun gear is centered by a bushing on the input shaft and held in place laterally by needle bearings on the reactor support and the overdrive planet assembly. The overdrive sun gear is splined to the coast clutch cylinder, which in turn is splined to the overdrive one-way clutch inner race.

The outer race of the one-way clutch is splined to the overdrive ring gear, which is splined to the center shaft. The center shaft is centered by the forward planetary assembly and is laterally held by needle bearings on the center support and the overdrive planet assembly. The center shaft is splined into the forward clutch cylinder.

Two friction clutches are assembled in the overdrive planet assembly. The coast clutch is splined between the coast clutch cylinder and the overdrive ring gear. The coast clutch is activated to perform engine braking in MANUAL 1, MANUAL 2 and third gear with the transmission control switch engaged.

The overdrive clutch is splined between the case and the coast clutch cylinder. The overdrive clutch holds the coast clutch cylinder and, in turn, the overdrive sun gear, to permit the planet assembly to overdrive the ring gear.

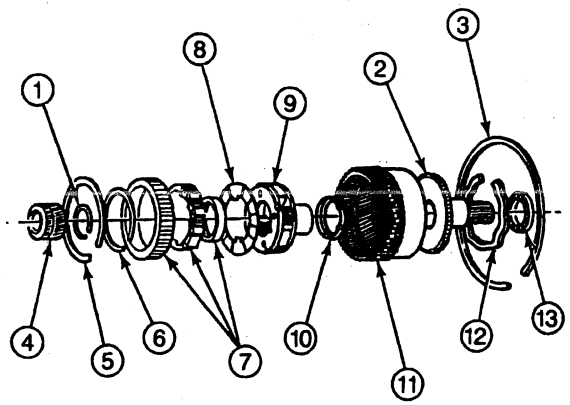

DD0741-A

Item	Part Number	Description
1	377300-S	Ring — Retaining (Attaches Gear Assy — O/D Sun to Cylinder Assy — Coast)
2	7A658	Shaft — Overdrive Center
3	7D483	Ring — Overdrive CL Pressure Plate Retainer (Selective Fit)
4	7D063	Gear Assy — Overdrive Sun
5	7G375	Ring — Retaining (Attaches Clutch Assy — O/D One-Way to O/D Ring Gear)
6	377135-S	Ring — Retaining (OWC to Outer Race)
7	7A089	Clutch Assy — Overdrive One-Way
8	7L339	Washer — Overdrive — Overrun Clutch Thrust No. 3
9	7B446	Planet Assy — Overdrive
10	7F240	Bearing Assy — Overdrive Planet — Thrust No. 4
11	7A153	Gear — Overdrive Ring
12	7G375	Ring — Wavy Retaining (Retaining Center O/D Shaft Assy to O/D Ring Gear)
13	7G178	Bearing Assy — Overdrive Center Shaft — Thrust No. 5

Center Support and Intermediate/Overdrive Clutch Cylinder

The center support provides a pilot for the forward clutch and direct clutch cylinders. It also provides fluid for clutch application and lube flow. The center support is held radially and laterally by the case. Fluid supply enters through feed bolts into the center support and supplies the forward clutch and the intermediate lube circuits. The direct clutch is fed by the center support.

DESCRIPTION AND OPERATION (Continued)

The intermediate/overdrive clutch cylinder is radially supported by the case. Laterally, the cylinder is held in the case by a snap ring. The overdrive circuit is fed through a feed bolt into the cylinder. The intermediate clutch circuit is fed through nearby orifices.

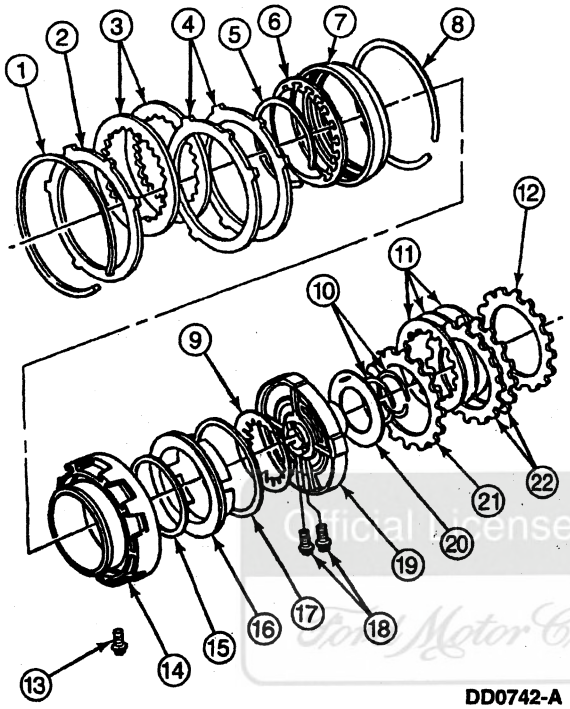

DD0742-A

Item	Part Number	Description
1	7D483	Ring — Overdrive CL Pressure Plate Retainer (Selective Fit)
2	7B066	Plate — Overdrive Clutch Pressure
3	7B164	Plate — Overdrive Clutch Internal Spline — Friction
4	7B442	Plate — Overdrive Clutch External Spline — Steel
5	7A527	Ring — Overdrive Clutch Disc Spring — Retaining
6	7B070	Spring — Overdrive Clutch Piston Disc
7	7A262	Piston and (Bonded) Seal Assy — Overdrive Clutch
8	7D483	Ring — Intermediate Cylinder Retaining
9	7B070	Spring — Intermediate Clutch Piston — Disc
10	7D025	Seal — Direct Clutch (2 Req'd)
11	7B164	Plate — Intermediate Clutch Internal Spline — Friction

(Continued)

Item	Part Number	Description
12	7B066	Plate — Intermediate Clutch Pressure — Rear
13	7Z059	Bolt — M10-1.5 x 24 mm Overdrive Cylinder Fluid Feed
14	7G384	Cylinder — Overdrive and Intermediate Clutch
15	7F225	Seal — Intermediate Clutch Piston — Inner
16	7E005	Piston — Intermediate Clutch
17	7F224	Seal — Intermediate Clutch Piston — Outer
18	7Z059	Bolt — M12-1.75 x 31 mm Center Support Fluid Feed (2 Req'd)
19	7A130	Support Assy — Center
20	7L326	Washer — Center Support Thrust No. 6
21	7B066	Plate — Intermediate Clutch Pressure — Apply
22	7B442	Plate — Intermediate Clutch External Spline — Steel

Forward Drive System

The forward drive system consists of the forward clutch cylinder, intermediate brake drum, intermediate one-way clutch, input shell, forward ring gear, forward ring gear hub, forward/reverse sun gear and the forward planetary carrier and forward planetary gears.

The forward clutch cylinder is splined on the center shaft. The forward ring gear is piloted on the forward ring gear hub. Thrust bearings on the forward planet assembly and forward clutch cylinder hold the forward ring gear hub in place.

The intermediate brake drum is radially supported by bushings on the center support and is laterally controlled by thrust washers on the forward clutch cylinder and center support. The intermediate brake drum has the inner race of the intermediate one-way clutch press-fitted on its pilot. The intermediate one-way clutch's outer race is splined to the intermediate friction clutch, which is splined to the case. The intermediate brake drum has lugs that are slotted into the input shell to form a mechanical connection. The input shell is splined into the forward/reverse sun gear. The forward/reverse sun gear is common to two planetary gearsets. The forward planet is splined to the output shaft and is laterally positioned by needle bearings on the sun gear and on the forward clutch cylinder, as shown in the following illustration.

Official Licensed Product Ford Motor Company

DESCRIPTION AND OPERATION (Continued)

Two friction clutch assemblies, the direct clutch and the forward clutch, are shown with the forward planetary assembly. The direct clutch assembly splines the forward clutch cylinder to the intermediate brake drum. The forward clutch assembly splines the forward clutch cylinder to the forward ring gear. The forward clutch is activated during all forward gears. While in third or fourth gear, both the direct and forward clutches are applied to hold the forward planetary assembly and enable it to act as a solid shaft.

In second gear, the intermediate clutch assembly holds the forward / reverse sun gears. It is applied, along with the intermediate one-way clutch, to hold the intermediate brake drum, input shell and forward / reverse sun gear. In higher gears, the one-way clutch overruns.

Forward Drive System Components

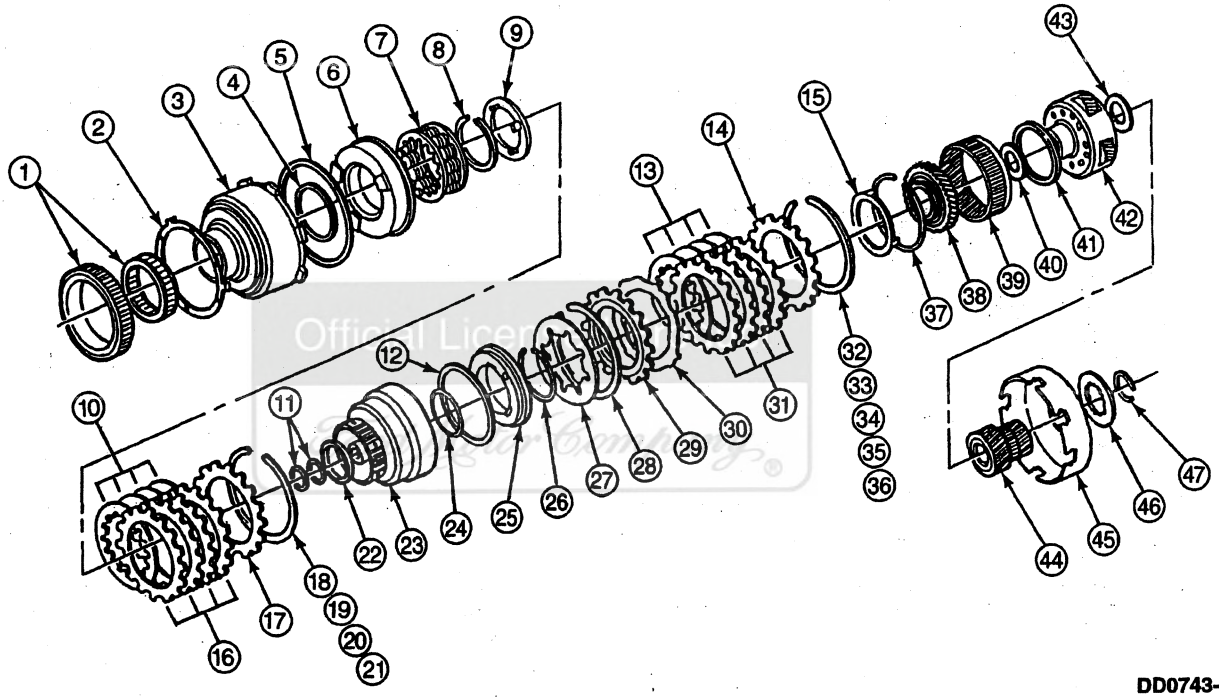

DD0743-A

Item	Part Number	Description
1	7A089	Clutch Assy — Intermediate One-Way
2	7G401	Washer — Intermediate One-Way Clutch — Thrust No. 7
3	7D044	Drum Assy — Intermediate Brake
4	7A548	Seal — Direct Clutch Piston — Inner
5	7A548	Seal — Direct Clutch Piston — Outer
6	7A262	Piston Assy — Direct Clutch
7	7F235	Retainer and Spring Assy — Direct Clutch
8	7C122	Ring — Direct Clutch Support Spring Retaining
9	7C096	Washer — Intermediate Brake Drum — Thrust No. 8A

(Continued)

Item	Part Number	Description
10	7B164	Plate — Direct Clutch Internal Spline — Friction
11	7D019	Seal — Forward Clutch Cylinder (2 Req'd)
12	7A548	Seal — Forward Clutch Piston — Outer
13	7B164	Plate — Forward Clutch Internal Spline — Friction
14	7B066	Plate — Forward Clutch Pressure — Rear
15	7D090	Washer — Forward Clutch Hub — Thrust No. 8C
16	7B442	Plate — Direct Clutch External Spline — Steel
17	7B066	Plate — Direct Clutch Pressure

(Continued)

DESCRIPTION AND OPERATION (Continued)

Item	Part Number	Description
18	377126-S	Ring — Direct Clutch Pressure Plate Retaining (Selective Fit)
19	377127-S	Ring — Retaining
20	377128-S	Ring — Retaining
21	377437-S	Ring — Retaining
22	7F374	Bearing Assy — Forward Clutch Needle — Thrust No. 8B
23	7A360	Cylinder Assy — Forward Clutch
24	7A548	Seal — Forward Clutch Piston — Inner
25	7A262	Piston Assy — Forward Clutch
26	7D256	Ring — Forward Clutch Piston Spring
27	7B070	Spring — Forward Clutch Piston Disc
28	377127-S	Ring — Forward Clutch Spring (FWD CL Piston Spring to FWD CL Cylinder Assy)
29	7B066	Plate — Forward Clutch Pressure
30	7E085	Spring — Forward Clutch Pressure
31	7B442	Plate — Forward Clutch External Spline — Steel
32	377127-S	Ring — Forward Clutch Pressure Plate Retaining (Selective Fit)

(Continued)

Item	Part Number	Description
33	377437-S	Ring — Retaining
34	377444-S	Ring — Retaining
35	386841-S	Ring — Retaining
36	386842-S	Ring — Retaining
37	377132-S	Ring — Forward Hub Retaining (Forward Ring Gear Hub to Forward Ring Gear)
38	7B067	Hub — Forward Ring Gear
39	7D392	Gear — Forward Ring
40	7D234	Bearing Assy — Forward Clutch Thrust (Between Forward Ring Gear and Forward Planet Assy) No. 9A
41	7A166	Bearing Assy — Forward Planet Carrier — Thrust No. 10A
42	7A398	Planet Assy — Forward
43	7D234	Bearing Assy — Forward Clutch Thrust (Between Forward Planet Assy and Forward Sun Gear Assy) No. 9B
44	7D063	Gear Assy — Forward/Reverse Sun
45	7D064	Shell — Input
46	7D066	Washer — Input Shell Thrust No. 14
47	377300-S	Ring — Retaining (Attaches Forward/Reverse Sun Gear Assy to Input Shell)

Official Licensed Product

Low-Reverse Drive System

The reverse planetary assembly consists of the reverse planetary carrier, reverse planet gears, the reverse ring gear, the reverse ring gear hub, the reverse clutch hub and the low-reverse one-way clutch assembly.

The reverse ring gear hub is splined to the output shaft and to the reverse ring gear. The reverse ring gear hub is laterally held by a needle bearing on the inner race of the low-reverse one-way clutch and a snap ring on the output shaft. The reverse planet (7D006) assembly is splined to the low-reverse clutch hub. The low-reverse clutch hub is connected by the reverse clutch to the case and is pinned to the outer race of the low-reverse one-way clutch. The inner race of the low-reverse one-way clutch is piloted on and bolted to the case.

DESCRIPTION AND OPERATION (Continued)

The reverse clutch assembly is activated in REVERSE gear and in MANUAL 1. The reverse clutch bypasses the reverse one-way clutch during coast and MANUAL 1. The reverse clutch holds the reverse planet assembly in REVERSE gear to enable the sun gear to drive the reverse ring gear in the opposite direction.

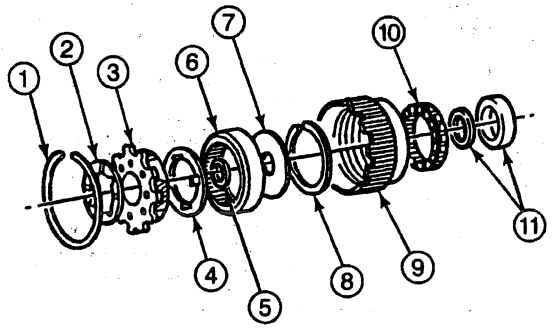

DD0744-A

Item	Part Number	Description
1	377155-S	Ring — Reverse Planet Retaining
2	7A166	Washer — Planet Carrier Thrust (Between Reverse Planet Assy and Input Shell) No. 10B
3	7D006	Planet Assy — Reverse
4	7A166	Washer — Planet Carrier — Thrust (Between Reverse Planet Assy and Output Shaft Hub) No. 11
5	387031-S	Ring — Retaining (Retaining Output Shaft Hub to Output Shaft Assy)
6	7A153	Gear — Output Shaft Ring
7	7D164	Hub — Output Shaft
8	377132-S	Ring — Retaining (Retaining Output Shaft Hub to Output Shaft Ring Gear)
9	7B067	Hub Assy — Reverse Clutch
10	7A089	Clutch Assy — Reverse One-Way
11	7G178	Low/Reverse One-Way Clutch Inner Race and Thrust Bearing Assy No. 12

Apply Components

The following information describes the operation of the three E4OD one-way clutches.

Overdrive One-Way Clutch

The overdrive one-way clutch, shown in the following illustration, transmits engine torque from the overdrive sun gear to the overdrive ring gear in first, second and third gear range. The overdrive one-way clutch transmits power when the sprags are engaged between the inner and outer races. The inner race is splined to the coast clutch cylinder, which in turn is splined to the overdrive sun gear. The outer race is splined to the overdrive ring gear.

The overdrive one-way clutch engages whenever the overdrive planetary system attempts to drive the overdrive sun gear clockwise when the overdrive ring gear has a counterclockwise torque from the vehicle. When torqued counterclockwise, the overdrive one-way clutch engages and acts as a wedge to lock the sun gear and the ring gear together. During coast, the overdrive one-way clutch enables the ring gear to overrun or spin at a faster rate than the sun gear.

The overdrive one-way clutch overruns when in overdrive (fourth gear). In overdrive, the coast clutch cylinder is held by the overdrive one-way clutch, which in turn holds the overdrive sun gear. This causes the overdrive planet assembly to walk about the sun gear and overdrive the overdrive ring gear. The inner race of the overdrive one-way clutch is thus held stationary while the outer race is allowed to overrun clockwise.

Overdrive One-Way Clutch (Roller Design)

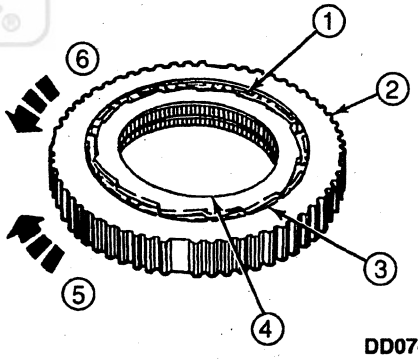

DD0745-A

Item	Part Number	Description
1	—	One-Way Clutch (Part of 7A089)
2	—	Outer Race (Part of 7A089)
3	377135-S	Small Retaining Ring
4	—	Inner Race (Part of 7A089)
5	—	Engaged
6	—	Overrunning

DESCRIPTION AND OPERATION (Continued)

Intermediate One-Way Clutch

The intermediate one-way clutch, shown in the following illustration, holds the forward / reverse sun gear stationary relative to the case in second gear. The outer race of the intermediate one-way clutch is splined to the intermediate clutch, which in turn is splined to the case. The inner race is pressed on the intermediate brake drum, which is connected to the sun shell. The sun shell is splined to the forward / reverse sun gear.

In second gear, the intermediate clutch holds the outer race of the intermediate one-way clutch. Torque from the vehicle acts counterclockwise on the output shaft, and in turn the forward planetary carrier and the reverse ring gear. Torque from the center shaft is counterclockwise.

This combination applies a counterclockwise torque on the sun gear and likewise the intermediate one-way clutch. The intermediate one-way clutch engages, causing the forward ring gear to turn the forward planetary carrier clockwise at reduced speed. During coast, the intermediate one-way clutch allows the sun gear to spin clockwise as the engine rpm coasts down.

The intermediate one-way clutch overruns in third, fourth and REVERSE gears. The direct clutch is engaged, causing the intermediate brake drum to rotate clockwise with the center shaft. With the intermediate drum rotating clockwise, the inner race also rotates clockwise, causing the intermediate one-way clutch to overrun.

In first gear, the outer race of the intermediate one-way clutch is not held, and the intermediate one-way clutch is overrunning.

Intermediate One-Way Clutch (Sprag Design)

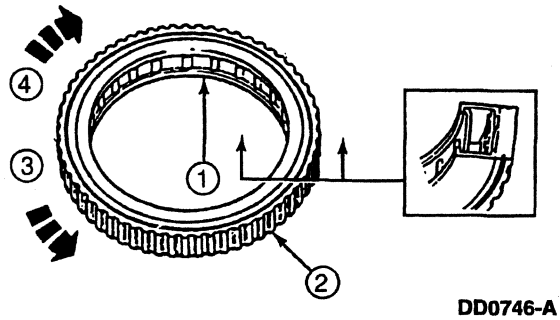

DD0746-A

Item	Part Number	Description
1	—	Sprags (Part of 7A089)
2	—	Outer Race (Part of 7A089)
3	—	Overrunning
4	—	Engaged

(Continued)

Low-Reverse One-Way Clutch

The low-reverse one-way clutch, shown in the following illustration, holds the reverse planetary carrier stationary to the case in first gear. The inner race of the low-reverse one-way clutch is bolted directly to the case. The outer race is splined to the reverse clutch hub, which is splined to the reverse planetary carrier.

In first gear, the center shaft drives the forward ring gear clockwise by way of the forward clutch. With the forward planetary carrier providing a counterclockwise resisting torque, the forward / reverse sun gear is driven counterclockwise.

As the sun gear is turned counterclockwise and the reverse ring gear is turned counterclockwise by the resistance of the vehicle, the reverse planetary carrier is also turned counterclockwise. Because the reverse planetary carrier is prevented from turning counterclockwise by the low-reverse one-way clutch, the torque is transferred from the sun gear to the reverse ring gear and the output shaft. During coast, the planetary carrier is allowed to overrun and spin clockwise.

The low-reverse one-way clutch overruns in second, third and fourth gears. In these cases the forward / reverse sun gear is stationary while the reverse ring gear turns clockwise with the output shaft. This turns the reverse planetary carrier clockwise, causing the low-reverse one-way clutch to run clockwise and overrun.

Low-Reverse One-Way Clutch

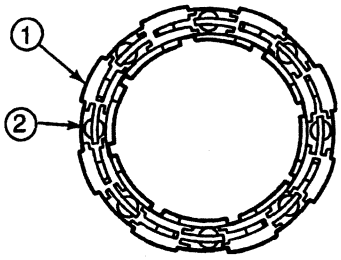

DD0747-A

Item	Part Number	Description
1	—	Unitized Plastic Cage (Part of 7A089)
2	—	Roller (Part of 7A089)

DESCRIPTION AND OPERATION (Continued)

Transmission Electronic Control System

Electronic System Description

The following pages provide a brief description of each of the sensors and actuators used with the E4OD transmission. The function of each of these components and the associated symptoms and diagnostic trouble codes (DTCs) are also given.

Official Licensed Product
Ford Motor Company

DESCRIPTION AND OPERATION (Continued)

E4OD Automatic Transmission Electronic Control System Component Locator

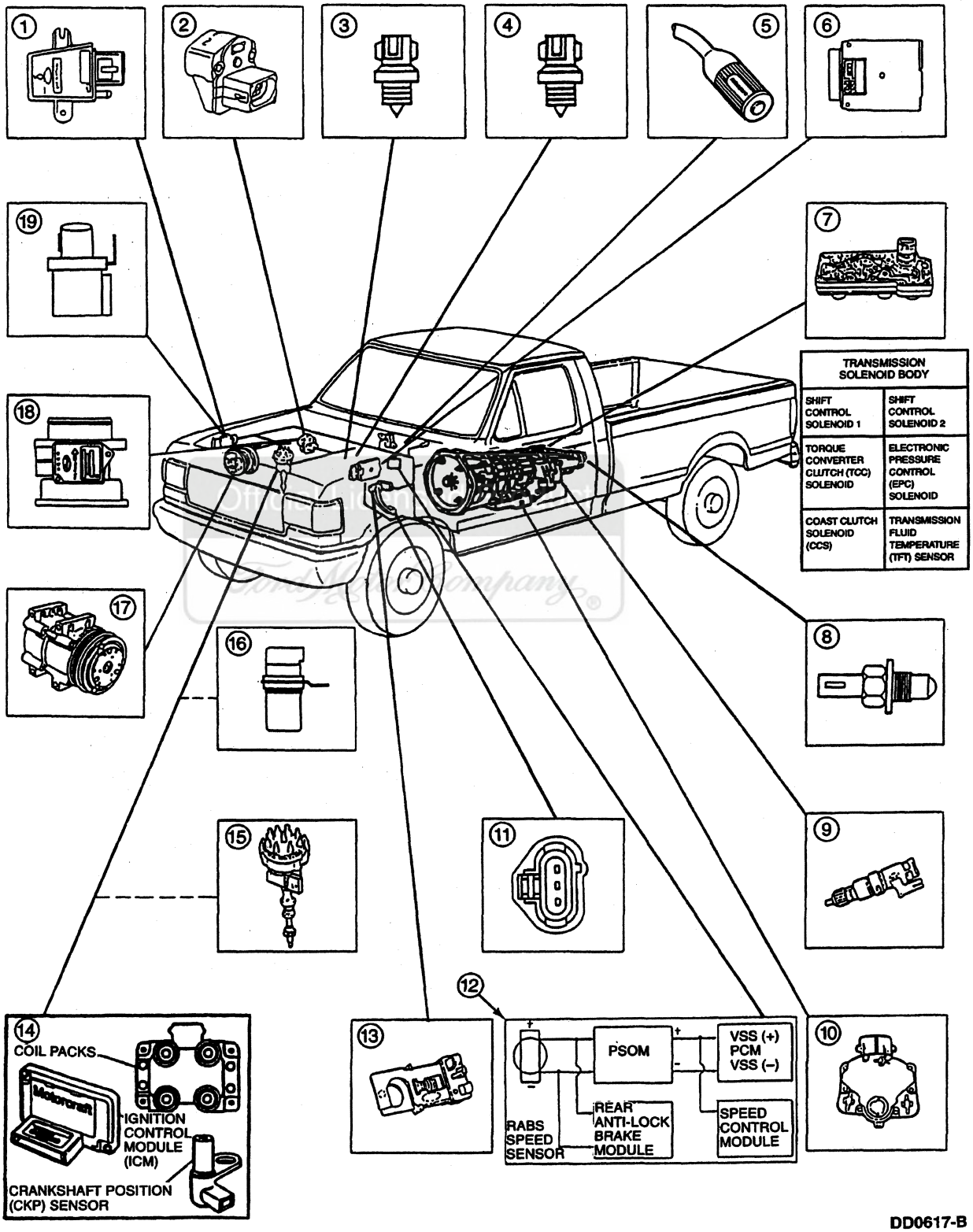

DESCRIPTION AND OPERATION (Continued)

Item	Part Number	Description
1	—	MAP / BARO Sensor
2	9B989	Throttle Position Sensor
3	—	Engine Oil Temperature (EOT) Sensor (7.3L DI Diesel)
4	—	Intake Air Temperature (IAT) Sensor (7.3L DI Diesel)
5	—	Transmission Control Switch (TCS) and Transmission Control Indicator Lamp (TCIL)
6	12A650	Powertrain Control Module
7	—	Transmission Solenoid Body
8	—	4x4 Low (4x4 L)
9	9E731	Vehicle Speed Sensor (VSS) (Model-Dependent)
10	7A247	Transmission Range (TR) Sensor

(Continued)

Item	Part Number	Description
11	—	Accelerator Pedal (AP) Sensor (7.3L DI Diesel)
12	—	Programmable Speedometer / Odometer Module (PSOM)
13	13480	Stoplight Switch
14	—	Electronic Ignition (EI) System
15	—	Distributor Ignition (DI) (Gasoline Engine)
16	—	Camshaft Position (CMP) Sensor (7.3L DI Diesel)
17	2884	Air Conditioning (A / C) Clutch
18	12B579	Mass Air Flow Sensor
19	—	Barometric Pressure (BARO) Sensor (7.3L DI Diesel)

Official Licensed Product
Ford Motor Company

Manifold Absolute Pressure (MAP) Sensor — Gasoline Engines

Description

On gasoline engines, the manifold absolute pressure sensor (MAP sensor)(9F479) senses atmospheric pressure to produce an electrical signal. The frequency of this signal varies with intake manifold pressure. The powertrain control module (PCM)(12A650) monitors this signal to determine altitude. The PCM then adjusts the E4OD shift schedule and EPC pressure for altitude. On diesel engines, the MAP sensor measures boost pressure. The PCM monitors this signal and adjusts EPC pressure.

Symptoms

Firm shift feel, late shifts at altitude

Diagnostic Trouble Codes

126-129, P0235-P0237

Throttle Position (TP) Sensor 9B989

Description

The throttle position sensor (TP sensor)(9B989) is a potentiometer that is mounted on the throttle body (9E926). The throttle position sensor detects the position of the throttle plate or lever and sends this information as a voltage signal to the powertrain control module. If the throttle position sensor or related circuits fail to operate in a normal manner, the powertrain control module will recognize that the throttle position sensor signal is out of specification. The powertrain control module will then operate the E4OD transmission at a higher line pressure to prevent transmission damage. This high line pressure causes harsh upshift and engagements. Used as an input to determine shift scheduling and electronic pressure control.

Symptoms

Harsh engagements, firm shift feel, abnormal shift schedule, abnormal or no torque converter clutch operation. May flash transmission control indicator lamp.

Diagnostic Trouble Codes

121, 122, 123, 124, 125, 167, P0121, P0122, P0123, P1120, P1121, P1124, P1125

DESCRIPTION AND OPERATION (Continued)

Transmission Control Switch (TCS) and Transmission Control Indicator Lamp (TCIL)

Description

The transmission control switch (TCS) is a momentary contact switch. When the switch is pressed, a signal is sent to the powertrain control module. The powertrain control module then energizes the transmission control indicator lamp and the coast clutch solenoid, applying the coast clutch to provide engine braking and cancels fourth gear operation. The TCIL indicates overdrive cancel mode activated (lamp on), electronic pressure control circuit shorted or monitored sensor failure (lamp flashing).

Sensor

Transmission control switch

Symptoms

No overdrive cancel when switch is cycled

Diagnostic Trouble Codes

632, P1780, tested during Key On Engine Off (KOEO) On-Board Diagnostic only

Actuator

Transmission control indicator lamp

Symptoms

Failed on — overdrive cancel mode always indicated, no flashing for electronic pressure control circuit shorted. Failed off — overdrive cancel mode never indicated, no flashing for electronic pressure control circuit shorted, also may be due to a bad fuse. Erratic operation (flashing) may be due to a wiring concern.

Diagnostic Trouble Code

631, P1779

Powertrain Control Module (PCM)

On vehicles equipped with gasoline engines, the operation of the E4OD automatic transmission is controlled by the powertrain control module. Many input sensors provide information to the powertrain control module, which then controls the actuators that affect transmission operation.

On vehicles equipped with diesel engines, the operation of the E4OD automatic transmission is also controlled by the powertrain control module. However, some of the input sensors are different.

Transmission Solenoid Body

Description

The powertrain control module controls the E4OD transmission operation through four on / off solenoids and one variable force solenoid. These solenoids and transmission fluid temperature sensor are housed in the transmission solenoid body assembly. All are part of the transmission solenoid body and are not replaced individually. Additionally, in 1995, the protection diodes that were on the solenoid body were moved to the PCM.

The four on / off solenoids operate in the following manner.

- When the solenoid is off, the fluid pressure feed is blocked by a check ball. The check ball is held in place by the solenoid piston.
- When the solenoid is turned on by the PCM, the piston is pulled up, releasing the check ball and allowing fluid pressure to be applied to the check valves, other components controlled by the solenoid, or both.

Transmission Fluid Temperature (TFT) Sensor

Description

The transmission fluid temperature sensor is located on the solenoid body assembly in the transmission sump. It is a temperature-sensitive device called a thermistor. The resistance value of the transmission fluid temperature sensor will vary with temperature change. The powertrain control module monitors voltage across the transmission fluid temperature sensor to determine the temperature of the transmission fluid. The powertrain control module uses this signal to determine whether a cold start shift schedule is necessary. The cold start shift schedule lowers shift speeds to allow for the reduced performance of cold engine operation. The powertrain control module also uses the transmission fluid temperature sensor input to adjust electronic pressure control pressure for temperature effects and to inhibit torque converter clutch operation during the warm-up period.

Symptoms

Torque converter clutch and stabilized shift schedule happens too soon after a cold start. Code 657 or P1783 indicates transmission fluid temperature exceeds 132°C (270°F) and results in increased EPC pressure and torque converter clutch engagement. May flash transmission control indicator lamp.

Diagnostic Trouble Codes

636, 637, 638, 657, P0712, P0713, P1711, P1783

Electronic Pressure Control (EPC) Solenoid

CAUTION: The electronic pressure control pressure output from the variable force solenoid is NOT adjustable. Any modification to the electronic pressure control solenoid will affect the transmission warranty.

Description

The electronic pressure control solenoid is a variable force solenoid. The variable-force type solenoid is an electrohydraulic actuator combining a solenoid and a regulating valve. It supplies electronic pressure control that regulates transmission line pressure and line modulator pressure. This is done by producing resisting forces to the main regulator and the line modulator circuits. These two pressures control clutch application pressures.

DESCRIPTION AND OPERATION (Continued)

Symptoms

Failed on — minimum electronic pressure control pressure (minimum transmission torque capacity). Limited engine torque (partial fuel shutoff, heavy misfire). Flashing transmission control indicator lamp. Failed off — maximum electronic pressure control pressure, harsh engagements and shifts. May flash transmission control indicator lamp.

Diagnostic Trouble Codes

624[1], 625[1], P1746[1], P1747[1]

Torque Converter Clutch (TCC) Solenoid

Description

The torque converter clutch solenoid (TCC solenoid) provides torque converter clutch control by shifting the converter clutch control valve to apply or release the torque converter clutch.

Symptoms

Failed on — engine stalls in drive at idle low speeds with brake applied or MANUAL 2. Failed off — converter clutch never engages. May flash transmission control indicator lamp.

Diagnostic Trouble Codes

629[1], P0741[2], P0743[1], P1742, P1743, P1744

Coast Clutch Solenoid (CCS)

Description

NOTE: On certain applications, the coast clutch is controlled by the PCM in the overdrive position (TCS OFF) in gears 1, 2, and 3.

The coast clutch solenoid provides coast clutch control by shifting the coast clutch shift valve. The solenoid is activated by pressing the transmission control switch or by selecting the 1 or 2 range with the transmission range selector lever. In MANUAL 1 and 2, the coast clutch is controlled by the solenoid and also hydraulically as a fail-safe to ensure engine braking. In reverse, the coast clutch is controlled hydraulically and the solenoid is not on.

Symptoms

Failed on — third gear engine braking with D range selected. Failed off — no third gear engine braking in overdrive cancel.

Diagnostic Trouble Code:

626[1], 628[2], 643[1], 652[1], P0741[2], P0743[1], P1754[1]

Shift Solenoids 1 and 2

Description

Shift solenoids 1 and 2 provide gear selection of first through fourth gears by controlling the pressure to the three shift valves.

Shift Solenoid 1

Symptoms

Improper gear selection, depending on failure mode and manual lever position. Refer to the Shift Solenoid Operation Chart in the Specifications portion of this section. May flash transmission control indicator lamp.

Diagnostic Trouble Codes

P617[2], 618[2], 619[2], 621[1], P0750[1], P0751, P0781[2], P0782[2], P0783[2]

Shift Solenoid 2

Symptoms

Improper gear selection, depending on failure mode and manual lever position. Refer to the Shift Solenoid Operation Chart in the Specifications portion of this section. May flash transmission control indicator lamp.

Diagnostic Trouble Codes

617[2], 618[2], 619[2], 622[1], P0755[1], P0781[2], P0782[2], P0783[2], P0756

Shift Solenoid Operation Chart

Refer to the Specifications portion of this section for the Shaft Solenoid Operation Chart. The chart shows normal solenoid operation for given operating modes.

4x4 Low (4x4L) Switch

Description

The low range switch is located on the transfer case cover (7165). It provides an indication of when the 4x4 transfer case gear system is in the LOW range. Modifies shift schedule for 4x4L transfer case gear ratio.

Symptoms

Failed on — Early shift schedule in 4x2 and 4x4H. Failed off — Shifts delayed in 4x4L. If the 4x4 low indicator light fuse is blown, the transmission (7003) will shift according to 4x4 low shift schedule regardless of transfer case position.

Diagnostic Trouble Codes

633, 691, P1729, P1781

Vehicle Speed Sensor (VSS) 9E731

Description

The vehicle speed sensor (VSS) (model-dependent) is a variable reluctance sensor that sends an AC/frequency signal to the powertrain control module. The vehicle speed sensor signal is used by the powertrain control module to calculate vehicle speed in mph and determine shift scheduling and electronic pressure control.

Symptoms

Harsh engagements, firm shift feel, abnormal shift schedule; unexpected downshifts can occur at closed throttle, abnormal torque converter clutch operation or torque converter clutch engages only at wide-open throttle. May flash transmission control indicator lamp.

1 Output circuit check, generated only by electrical condition.
2 May also be generated by other non-electronic-related transmission hardware conditions.

Official Licensed Product
Ford Motor Company

DESCRIPTION AND OPERATION (Continued)

Diagnostic Trouble Codes

452, P0500, P1500, P1501, P0503

Transmission Range (TR) Sensor 7A247

Description

The powertrain control module sends voltage to the Transmission Range (TR) sensor. The TR sensor incorporates a series of step-down resistors which act as a voltage divider. The powertrain control module monitors this voltage which corresponds to the positon of the transmission range selector lever (P, R, N, D, 2 or 1). The powertrain control module uses this information to determine the desired gear and electronic pressure control pressure. The TR sensor is located on the outside of the transmission at the manual lever.

Symptoms

Harsh engagements, firm shift feel.

Diagnostic Trouble Codes

634, 654, 667, 668, P0705, P0707, P0708, P1705

Accelerator Pedal (AP) Sensor — 7.3L DI Diesel Only

Description

The accelerator pedal (AP) sensor is mounted on the accelerator pedal on vehicles equipped with a 7.3L DI diesel engine. The AP sensor detects the position of the accelerator pedal and sends this information as a voltage signal to the PCM. If the AP sensor or related circuits fail to operate in a normal manner, the powertrain control module will recognize that the AP sensor signal is out of specification. The powertrain control module will then operate the E4OD transmission at a higher line pressure to prevent transmission damage. This high line pressure causes harsh upshift and engagements. Used as an input to determine shift scheduling and electronic pressure control.

Symptoms

Harsh engagements, firm shift feel, abnormal shift schedule, abnormal or no torque converter clutch operation. May flash transmission control indicator lamp.

Diagnostic Trouble Codes

122, 123, P0122, P0123

Programmable Speedometer/Odometer Module (PSOM)

Description

The programmable speedometer/odometer module receives input from the rear brake anti-lock sensor, which is mounted on the rear axle differential housing. The PSOM processes this input signal information and relays it to the powertrain control module and the speed control module. This signal tells the powertrain control module the vehicle speed in miles per hour (mph). Used as an input in determining shift scheduling and electronic pressure control.

Symptoms

Harsh engagements, firm shift feel, abnormal shift schedule, unexpected downshifts may occur at closed throttle, abnormal torque converter clutch operation or engages only at wide-open throttle (WOT). May flash transmission control indicator lamp.

Diagnostic Trouble Codes

452, P0500, P1500, P1501, P0503

Stoplight Switch 13480

Description

The stoplight switch (13480) tells the powertrain control module when the brakes are applied. The switch is closed when the brakes are applied and open when they are released. The PCM uses this signal to disengage the torque converter clutch when the brake is applied.

Symptoms

Failed on or not connected — torque converter clutch will not engage at less than one-third throttle. Failed off — torque converter clutch will not disengage when brake is applied.

Diagnostic Trouble Code

536, P1703

Distributor Ignition (DI) System

Description

On gasoline engines, the profile ignition pickup sensor sends a signal to the powertrain control module indicating the engine rpm and the crankshaft (6303) position.

Symptoms

Engine will stall or miss.

Diagnostic Trouble Codes

211, P0340, P0341, P0344

Camshaft Position (CMP) Sensor — 7.3L DI Diesel Only

Description

On the 7.3L DI diesel engines, the CMP sensor provides engine rpm information to the PCM. This rpm input is used to determine shift scheduling and EPC pressure.

Symptoms

No start

Diagnostic Trouble Codes

P0340, P0341, P0344

Official Licensed Product

DESCRIPTION AND OPERATION (Continued)

Air Conditioning (A/C) Clutch 2884

Description

The air conditioning clutch is an electromagnetic clutch that is energized when the clutch cycling A/C pressure cut-off switch (19D594) closes. The A/C pressure cut-off switch is located on the suction accumulator-drier. The closing of the A/C pressure cut-off switch completes the circuit to the clutch and draws it into engagement with the compressor driveshaft. The A/C pressure cut-off switch is used as an input to determine electronic pressure control when the air conditioning clutch is engaged to compensate for the additional load on the engine.

Symptoms

Failed on — electronic pressure control slightly low with A/C off. Failed off — electronic pressure control slightly high with A/C on.

Diagnostic Trouble Codes

539, P1460, P1463, P1464

Mass Air Flow (MAF) Sensor 12B579

Description

The mass air flow sensor (MAF sensor)(12B579) directly measures the mass of air flowing into the engine. The sensor output is a DC (analog) signal ranging from 0.5 volt to 5 volts, used by the processor to calculate injector pulse width. Used as an input to determine electronic pressure control.

Symptoms

High electronic pressure, firm shifts and engagements.

Diagnostic Trouble Codes

157, 158, 159, 184, 185, P0102, P0103, P1100, P1101

Barometric Pressure (BARO) Sensor — 7.3L DI Diesel Only

Description

The barometric pressure sensor (BARO sensor)(12A644) operates similarly to the manifold absolute pressure sensor. It measures barometric pressure instead of intake manifold pressure. The powertrain control module uses the signal from the barometric pressure sensor to determine the altitude at which the vehicle is operating. The powertrain control module then adjusts the E4OD shift schedule and EPC pressure for the altitude.

Symptoms

Firm shift feel, late shifts at altitude

Diagnostic Trouble Codes

P0107, P0108

DIAGNOSIS AND TESTING

Diagnostic Strategy

Troubleshooting an electronically controlled automatic transmission (7003) is simplified by using the proven method of diagnosis. One of the most important things to remember is that there is a definite procedure to follow. DO NOT TAKE SHORT CUTS OR ASSUME THAT CRITICAL CHECKS OR ADJUSTMENTS HAVE ALREADY BEEN MADE. Follow the procedures as written to avoid missing critical components or steps.

To diagnose a concern properly, the technician should have the following publications available:

- this manual
- transmission reference manual
- 1997 Powertrain Control/Emissions Diagnosis (PC/ED) Manual[3] for 7.3L DI Diesel Engine
- 1996 Powertrain Control/Emissions Diagnosis (PC/ED) Manual[3] for engines other than 7.3L DI Diesel
- OASIS messages
- Technical Service Bulletins (TSBs)
- Electrical and Vacuum Troubleshooting Manual (EVTM)

These publications provide the information required when diagnosing transmission concerns.

Using the Diagnostic Flow Chart as a guide, follow the steps as indicated.

Preliminary Inspection

- Know and understand the customer's concern.
- Check the fluid level and condition.
- Verify the concern by operating the vehicle.
- Check for non-factory add-on items.
- Check shift linkages for proper adjustment.
- Check TSBs and OASIS messages for the concern.

Diagnostics

- Perform on-board diagnostic procedures (KOEO, KOER).
- Record all diagnostic trouble codes (DTCs).
- Repair all non-transmission codes FIRST.
- Repair all transmission codes SECOND.
- Erase all continuous codes and attempt to repeat them.
- Repair all continuous codes.
- If ONLY PASS codes are received, proceed to Diagnosis by Symptom Index under Diagnosis by Symptom in the Diagnosis and Testing portion of this section for further information and diagnosis.

By following the diagnostic sequence, the technician will be able to diagnose and repair the concern the first time.

3 Can be purchased as a separate item.

DIAGNOSIS AND TESTING (Continued)

Diagnostic Flowchart

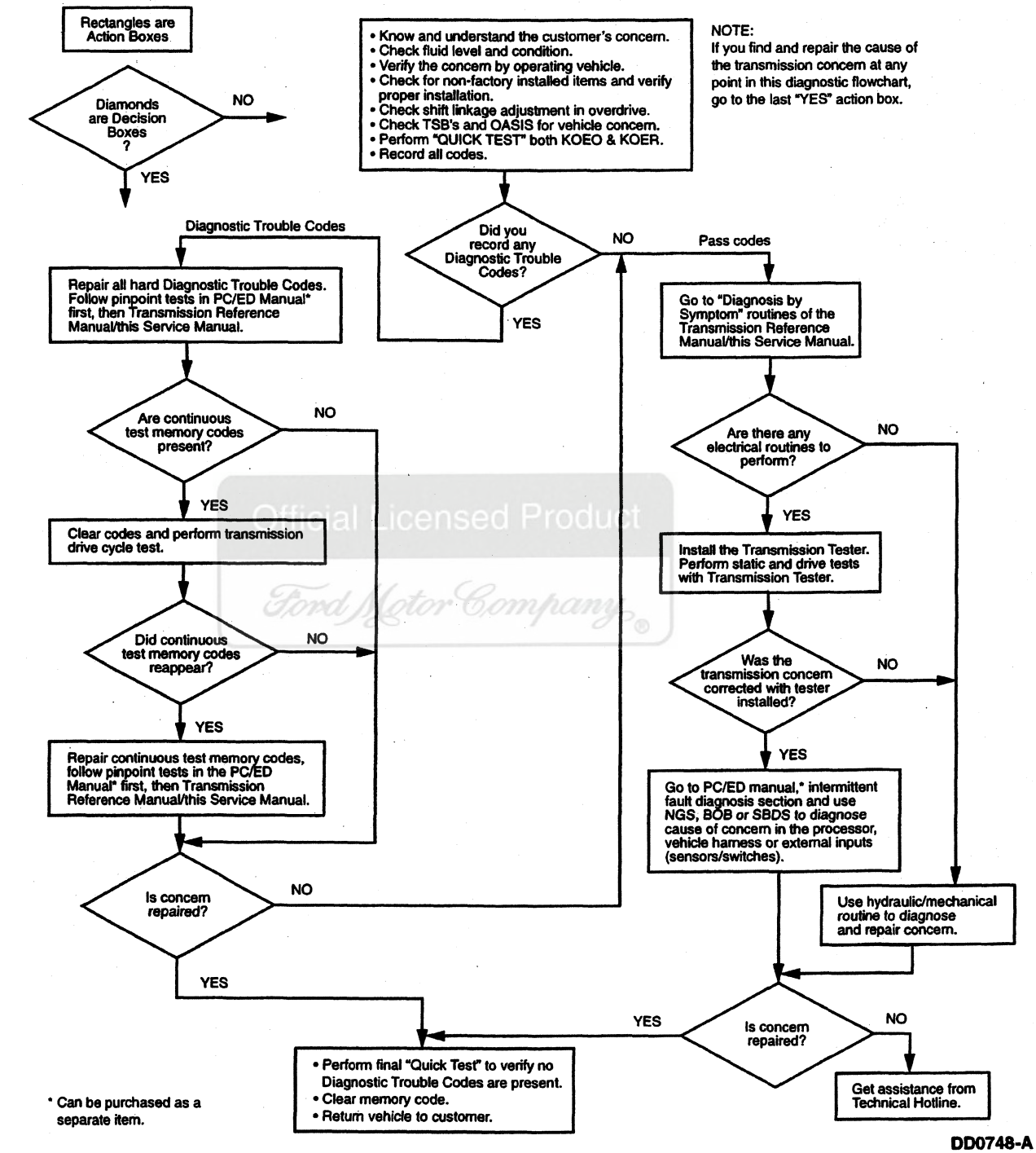

Official Licensed Product
Ford Motor Company

Preliminary Inspection

The following items must be checked before proceeding.

DIAGNOSIS AND TESTING (Continued)

Know / Understand the Concern

In order to diagnose a concern properly, you must first understand the customer complaint or condition. Customer contact may be required in order for the technician to begin to verify the concern. You must also understand the conditions when the concern occurs, for example:

- hot or cold vehicle temperature
- hot or cold ambient temperature
- vehicle driving conditions

After understanding when and how the concern occurs, proceed to verify the condition.

Verification of Condition

NOTE: Some transmission conditions can cause engine concerns. An EPC short circuit can cause engine misfiring. The torque converter clutch not disengaging will stall the engine.

This section provides information that must be used in both determining the actual cause of customer concerns and performing the appropriate procedures.

The following procedures must be used when verifying customer concerns for the transmission (7003).

Required Equipment

- Rotunda New Generation Star (NGS) Tester 007-00500 or equivalent
- 1997 Powertrain Control / Emissions Diagnosis (PC / ED) Manual[4] for 7.3L DI Diesel Engine
- 1996 Powertrain Control / Emissions Diagnosis (PC / ED) Manual[4] for engines other than 7.3L DI Diesel
- Transmission Range (TR) Sensor (MLPS) Alignment Tool T92P-70010-AH or equivalent
- Rotunda Digital Volt-Ohmmeter 014-00407 or equivalent
- Rotunda Transmission Tester 007-000130 or equivalent
- Rotunda Transmission Range (TR) Sensor Cable "B" (MLPS) Manual Lever Position Sensor Cable) 007-00127, used with Transmission Tester 007-000130 or equivalents.
- Rotunda E4OD (95 /) Cable and Overlay 007-00107
- Rotunda EEC-IV 60-Pin Breakout Box 014-00322 or equivalent
- Rotunda EEC-V 104-Pin Breakout Box 014-00950 or equivalent

Determine Customer Concern

NOTE: Some transmission conditions can cause engine concerns. An electronic pressure control short circuit can cause engine misfiring. The torque converter clutch not disengaging will stall the engine.

Determine customer concerns relative to vehicle use and dependent driving conditions, paying attention to the following items:

- hot or cold vehicle operating temperature
- hot or cold ambient temperatures
- type of terrain
- vehicle loaded / unloaded
- city / highway driving
- upshift
- downshift
- coasting
- engagement
- noise / vibration — check for dependencies, either rpm dependent, vehicle speed dependent, shift dependent, gear dependent, range dependent, or temperature dependent.

Check Fluid Level and Condition

Fluid Level Check

CAUTION: Vehicles equipped with 4x4 applications must have the 4x4 gearshift selector lever in any position other than NEUTRAL.

CAUTION: If the vehicle has been operating for an extended period at high speeds or in city traffic during hot weather, or pulling a trailer, turn the vehicle off for about 30 minutes to allow the fluid to cool before checking.

Under normal circumstances, you do not need to check the fluid level of the transmission, since the vehicle does not use up transmission fluid. However, if the transmission is not working properly, for instance, the transmission slips or shifts slowly, or if you notice some sign of fluid leakage, check the fluid level.

It is preferable to check the transmission fluid level at normal operating temperature after approximately 32 km (20 miles) of driving. However, if necessary, you can check the fluid level without having to drive 32 km (20 miles) to obtain a normal operating temperature, if outside temperature is above 10°C (50°F).

With the vehicle on a level surface, start the engine and move the transmission range selector lever through all of the gear ranges, allowing sufficient time for each position to engage. Securely engage the transmission range selector lever in the PARK position, fully set the parking brake control (2780) and leave the engine running.

Wipe off the fluid level indicator cap, pull the fluid level indicator (7A020) out and wipe the indicator end clean. Put the fluid level indicator back into the fluid filler tube and make sure it is fully seated. Pull the fluid level indicator out and read the fluid level.

4 Can be purchased as a separate item.

DIAGNOSIS AND TESTING (Continued)

CAUTION: The vehicle should not be driven if the fluid level is below the bottom hole on the flat blade style fluid level indicator or below the COLD marked area on the bullet style fluid level indicator and outside temperature is above 10°C (50°F).

When checking fluid at normal operating temperature, the fluid level should be within the cross-hatched or HOT marked area on the fluid level indicator. When the vehicle has not been driven, and outside temperature is above 10°C (50°F), the fluid level should be between the holes or within the COLD marked area on the fluid level indicator.

NOTE: STYLE OF TRANSMISSION FLUID LEVEL INDICATOR IS MODEL-DEPENDENT

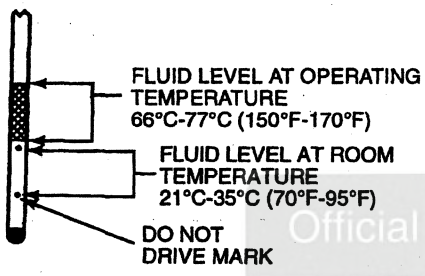

DD0618-B

NOTE: STYLE OF TRANSMISSION FLUID LEVEL INDICATOR IS MODEL-DEPENDENT

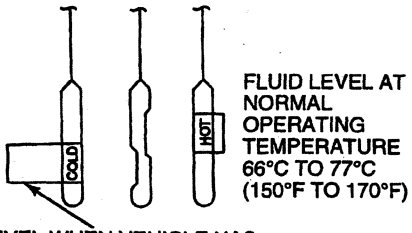

DD0749-A

High or Low Fluid Level

A fluid level that is too high can cause the fluid to become aerated due to the churning action of the rotating parts of the transmission. Aerated fluid will cause erratic control pressure that can result in harsh/soft shifts or engagements, damage to the clutch materials, improper torque converter (7902) operation, and the aerated fluid may be forced from the case vent (7034) assembly. If fluid level is high, excess fluid MUST be removed. Refer to Transmission Fluid Drain and Refill in the In-Vehicle Service portion of this section.

A fluid level that is too low will affect transmission operation, causing slipping, slow engagements, or damage to internal hardware. Low level may indicate fluid leaks that can cause transmission damage. If fluid level is low, refer to the following procedure.

Adding Fluid

Use only Motorcraft MERCON® Multi-Purpose Automatic Transmission Fluid XT-2-QDX or MERCON® equivalent in all Ford automatic transmissions. Before adding any fluid, make sure the correct type will be used.

Add fluid in 0.24L (0.5-pint) increments through the fluid filler tube to bring the level to the correct area on the fluid level indicator. If an overfill occurs, remove excess fluid.

Fluid Condition Check

1. Make the normal fluid level check. Refer to Fluid Level Check under Verification of Condition in the Diagnosis and Testing portion of this section.
2. Observe color and odor of the fluid. It should be red, not brown or black. Odor can indicate overheating condition, clutch disc or band failure.
3. Using an absorbent white facial tissue, wipe the fluid level indicator. Examine the stain for evidence of solid particles and for engine coolant signs (gum or varnish on fluid level indicator).
   - If particles are present in the fluid or there is evidence of engine coolant or water, remove the transmission fluid pan (7A194) for further inspection.
   - If fluid contamination or transmission failure is confirmed by further evidence of coolant or excessive particles in the transmission fluid pan, the transmission **must** be disassembled and completely cleaned and repaired or replaced. This includes cleaning and flushing the torque converter and transmission cooling system. Repair or replace radiator (8005).
   - During disassembly and assembly, make all overhaul checks and adjustments of clearances and end play.
   - After the transmission has been repaired, complete all diagnostic tests and adjustments listed in the Diagnosis by Symptom Charts under Diagnosis by Symptom in the Diagnosis and Testing portion of this section to ensure that the concern has been corrected.

Road Testing Vehicle

The following Shift Point Road Test and Torque Converter Clutch Operation Test provide diagnostic information on transmission shift controls and torque converter operation.

Shift Point Road Test

This test verifies that the shift control system is operating properly.

1. Bring engine and transmission up to normal operating temperature.

Official Licensed Product
Ford Motor Company

DIAGNOSIS AND TESTING (Continued)

2. Operate the vehicle with the transmission range selector lever in (D) range.
3. NOTE: Always observe posted speed limits.

   Apply minimum throttle and observe the speeds at which the upshift occurs and the torque converter engages. (Refer to Automatic Transmission Special Specification Bulletin FPS-12180-97 for actual speed.)

E4OD APPLICATIONS SHIFT SPEEDS — APPROXIMATE* MPH (F-250 HD, F-350 WITH 5.8L ENGINE)

Throttle Opening	Range	Shift	Vehicle Speed (1) Axle Ratio 3.55	Vehicle Speed (1) Axle Ratio 4.10
Light Throttle	(D), D	1-2	13-17	12-15
	(D), D	2-3	25-29	23-27
	(D)	3-4	42-48	40-46
	(D)	4-3	34-40	32-38
	(D), D	3-2	15-19	23-27
	(D), D	2-1	8-10	7-9
Wide-Open Throttle	(D), D	1-2	34-40	32-38
	(D), D	2-3	62-70	59-69
	(D)	3-4	85-95	79-89
	(D)	4-3	79-89	74-84
	(D), D	3-2	56-74	51-58
	(D), D	2-1	29-33	26-30

NOTE: D is the same as (D) with the transmission control switch actuated (light on).

*(1) Nominal shift speed at sea level is shown. Actual shift speed will depend on tire brand, size and axle ratio. Refer to Automatic Transmission Special Specification Bulletin FPS-12180-97 for actual speeds.

E4OD APPLICATIONS SHIFT SPEEDS — APPROXIMATE* MPH (F-250 HD, F-350 HD, COMMERCIAL CHASSIS/MOTORHOME WITH 7.5L ENGINE)

Throttle Opening	Range	Shift	Vehicle Speed (1) Axle Ratio 3.55	Vehicle Speed (1) Axle Ratio 4.10	Vehicle Speed (1) Axle Ratio 5.13
Light Throttle	(D), D	1-2	13-16	10-13	8-11
	(D), D	2-3	22-26	18-21	14-17
	(D)	3-4	42-48	34-39	27-31
	(D)	4-3	39-44	31-36	25-29
	(D), D	3-2	19-23	15-19	12-15
	(D), D	2-1	12-15	8-11	6-9
Wide-Open Throttle	(D), D	1-2	39-45	33-38	26-31
	(D), D	2-3	69-78	58-66	46-53
	(D)	3-4	99-111	85-95	67-76
	(D)	4-3	94-105	79-89	63-72
	(D), D	3-2	61-69	52-59	41-47
	(D), D	2-1	34-39	28-33	22-26

NOTE: D is the same as (D) with the transmission control switch actuated (light on).

*(1) Nominal shift speed at sea level is shown. Actual shift speed will depend on tire brand, size and axle ratio. Refer to Automatic Transmission Special Specification Bulletin FPS-12180-97 for actual speeds.

Ford Motor Company Confidential Proprietary

DIAGNOSIS AND TESTING (Continued)

E4OD APPLICATIONS SHIFT SPEEDS — APPROXIMATE* MPH (F-SUPER DUTY WITH 7.5L ENGINE)

Throttle Opening	Range	Shift	Vehicle Speed (1) Axle Ratio 4.63	Vehicle Speed (1) Axle Ratio 5.13
Light Throttle	(D), D	1-2	9-12	8-11
	(D), D	2-3	16-19	15-17
	(D)	3-4	31-34	28-30
	(D)	4-3	29-32	26-28
	(D), D	3-2	14-17	13-15
	(D), D	2-1	7-10	6-9
Wide-Open Throttle	(D), D	1-2	30-34	27-30
	(D), D	2-3	54-59	49-51
	(D)	3-4	78-84	71-73
	(D)	4-3	74-79	66-69
	(D), D	3-2	48-52	43-45
	(D), D	2-1	26-29	23-25

NOTE: D is the same as (D) with the transmission control switch actuated (light on).

*(1) Nominal shift speed at sea level is shown. Actual shift speed will depend on tire brand, size and axle ratio. Refer to Automatic Transmission Special Specification Bulletin FPS-12180-97 for actual speeds.

E4OD APPLICATIONS SHIFT SPEEDS — APPROXIMATE* MPH (F-250 HD, F-350, F-SUPER DUTY WITH 7.3L DI DIESEL ENGINE

Throttle Opening	Range	Shift	Vehicle Speed (1) Axle Ratio 3.55	4.10	4.63	5.13
Light Throttle	(D), D	1-2	12-15	10-13	9-12	8-11
	(D), D	2-3	21-25	18-22	17-20	15-18
	(D)	3-4	39-44	33-38	31-34	28-31
	(D)	4-3	36-42	31-36	29-32	26-29
	(D), D	3-2	19-23	16-20	15-18	13-16
	(D), D	2-1	9-12	8-11	7-10	7-9
Wide-Open Throttle	(D), D	1-2	25-30	22-26	20-23	18-21
	(D), D	2-3	50-57	43-50	40-44	36-40
	(D)	3-4	77-86	66-75	61-66	55-60
	(D)	4-3	71-80	61-69	57-62	51-56
	(D), D	3-2	44-51	38-44	35-39	32-35
	(D), D	2-1	19-23	16-20	15-18	13-16

Official Licensed Product Ford Motor Company

NOTE: D is the same as (D) with the transmission control switch actuated (light on).

*(1) Nominal shift speed at sea level is shown. Actual shift speed will depend on tire brand, size and axle ratio. Refer to Automatic Transmission Special Specification Bulletin FPS-12180-97 for actual speeds.

4. With the vehicle in OVERDRIVE (fourth gear), press the transmission control switch. The transmission should downshift to third gear. Remove foot from accelerator pedal; engine braking should occur.
5. Press accelerator pedal to floor (wide-open throttle). Transmission should shift from third to second gear or third to first, depending on vehicle speed. Torque converter clutch should disengage and then reapply.
6. With vehicle (D) range above 80 km/h (50 mph) and less than half throttle, move the transmission range selector lever from (D) range to MANUAL 2 range and remove foot from accelerator pedal. The transmission should immediately downshift into second gear. With the vehicle remaining in MANUAL 2 range, move transmission range selector lever into MANUAL 1 range. Transmission should downshift into first gear at speeds BELOW 48-56 km/h (30-35 mph).
7. If transmission fails to upshift/downshift or torque converter clutch does not apply and release, refer to Diagnosis by Symptom Index under Diagnosis by Symptom in the Diagnosis and Testing portion of this section for concern diagnosis.

DIAGNOSIS AND TESTING (Continued)

Torque Converter Diagnosis

Prior to torque converter replacement, all diagnostic procedures must be followed. This is to prevent the unnecessary replacement of good torque converters. Only after a complete diagnostic evaluation can the decision be made to replace the torque converter.

Begin with the normal diagnostic procedures as follows:

1. Preliminary inspection
2. Know and understand the customer's concern
3. Verify the concern
   - Perform the Torque Converter Clutch Operation Test in this section.
4. Perform Diagnostic Procedures
   - Run on-board diagnostics. Refer to Diagnostics in the Diagnosis and Testing portion of this section.
     - — Repair all non-transmission-related DTCs first.
     - — Repair all transmission DTCs.
     - — Rerun on-board diagnostics to verify repair.
   - Perform Line Pressure Test. Refer to Special Testing Procedures in the Diagnosis and Testing portion of this section.
   - Perform Stall Speed Test. Refer to Special Testing Procedures in the Diagnosis and Testing portion of this section.
   - Go to Diagnosis by Symptom Routines in the Diagnosis and Testing portion of this section.
     - — Use the index to locate the appropriate routine that best describes the symptom(s). The routine will list all possible components that can cause or contribute to the symptom. Check each component listed, diagnose and service as required, before servicing the torque converter.

Torque Converter Clutch Operation Test

This test verifies that the torque converter clutch control system and the torque converter are operating properly.

1. Perform Quick Test. Refer to the 1997 Powertrain Control / Emissions Diagnosis (PC / ED) Manual[5] for 7.3L DI Diesel Engine, or to the 1996 PC / ED for all other engines. Check for codes 628, 629, 652, P0741, P0743, P1742, P1743, P1744. Refer to the Diagnosis and Testing portion of this section for pinpoint tests.
2. Connect a tachometer to the engine.
3. Bring engine to normal operating temperature by driving the vehicle at highway speeds for approximately 15 minutes in D range.
4. After normal operating temperatures are reached, maintain a constant vehicle speed of about 80 km / h (50 mph), and tap the brake pedal (2455) with the left foot.
5. Engine rpm should increase when the brake pedal is tapped, and decrease about 5 seconds after the brake pedal is released. If this does not occur, refer to Torque Converter Clutch Operation Concerns in the Diagnosis by Symptom Index under Diagnosis by Symptom in the Diagnosis and Testing portion of this section.
6. If the vehicle stalls in D at idle with the vehicle at a stop, move the transmission range selector lever to the MANUAL 1 position. If the vehicle stalls, the cause may be the converter control valve in the pump. Repair or replace as required. If the vehicle does not stall in MANUAL 1, Refer to Electrical Diagnosis in the 1997 Powertrain Control / Emissions Diagnosis Manual[5] for 7.3L DI Diesel Engine, or to the 1996 PC / ED[5] for all other engines, for diagnosis of the powertrain control module (PCM)(12A650) and the vehicle harness.

Visual Inspection

This inspection will identify modifications or additions to the vehicle operating system that can affect diagnosis.

Inspect vehicle for non-Ford approved add-on devices such as:

- air conditioning.
- generators (alternators).
- engine turbos.
- cellular telephones.
- cruise controls.
- CB radios.
- linear boosters.
- backup alarm signals.
- computers.

These items, if not installed properly, will affect powertrain control module or transmission function. Pay particular attention to add-on wiring splices in the powertrain control module harness or transmission wiring harness, abnormal tire size or axle ratio changes.

Leaks — refer to Leakage Inspection in the Diagnosis and Testing portion of this section.

Proper linkage adjustments — refer to Section 07-05.

Check TSBs and OASIS

Refer to all Technical Service Bulletins and OASIS messages that pertain to the transmission concerns, and follow the procedure outlined.

Official Licensed Ford Motor Company

5 Can be purchased as a separate item.

DIAGNOSIS AND TESTING (Continued)

Perform On-Board Diagnostics

After a road test, with the vehicle warm and before disturbing any connectors, perform the Quick Tests using Rotunda New Generation Star (NGS) Tester 007-00500 or equivalent.

Refer to Diagnostics in the Diagnosis and Testing portion of this section.

Diagnostics

Diagnosing an electronically controlled automatic transmission (7003) is simplified by using the following procedures. One of the most important things to remember is that there is a definite procedure to follow. DO NOT TAKE SHORT CUTS OR ASSUME THAT CRITICAL CHECKS OR ADJUSTMENTS HAVE ALREADY BEEN MADE. Follow the procedures as written to avoid missing critical components or steps. By following the diagnostic sequence, the technician will be able to diagnose and repair the concern the first time.

On-Board Diagnostics with NGS

NOTE: New Generation Star (NGS) Tester or equivalent must be used on EEC-V equipped vehicles in order to retrieve four-digit DTCs properly.

The Quick Tests for 7.3L DI Diesel Engine are in the 1997 Powertrain Control/Emissions Diagnosis (PC/ED) Manual[6] for all other engines, refer to the 1996 PC/ED[6] Manual. These tests can be used to diagnose the powertrain control module (PCM)(12A650), sensors and actuators of the E4OD transmission.

The following is a guide for using the On-Board Diagnostic (OBD) Quick Tests and the New Generation Star (NGS) Tester, with some special considerations to remember.

- For detailed instructions and other diagnostic methods using the NGS, refer to the 1997 PC/ED Manual[6] for 7.3L DI Diesel Engine, to the 1996 PC/ED for all other engines, or to the NGS instruction guide.
- If using a generic scan tool, refer to the appropriate PC/ED Manual[6] for instructions on performing OBD procedures.

Quick Test 1.0 — Visual Inspection

Perform the Visual Check and Vehicle Preparation procedures. Refer to the 1997 Powertrain Control/Emissions Diagnosis Manual[6] for 7.3L DI Diesel Engine, or to the 1996 PC/ED[6], for all other engines.

Inspect the following:

- air cleaner and inlet ducting
- all engine vacuum hoses for damage — leaks, cracks, blockage, proper routing, etc.
- PCM system wiring harnesses for proper connections, bent or broken pins, corrosion, loose wires, proper routing, etc.
- PCM, sensors and actuator for physical damage
- engine coolant for proper level
- transmission fluid for proper level and condition
- any non-factory installed items wired into the transmission or PCM harnesses

Perform all necessary repairs before continuing with Quick Tests.

Quick Test 2.0 — Setup

Connect New Generation Star (NGS) Tester to data link connector.

The following are procedures to run OBDII procedures.

Vehicle and Tester Preparation

Prepare the vehicle as follows:

- Transmission range selector lever in PARK.
- Engine to operating temperature.
- Apply parking brake.
- Block wheels.
- Turn off all electrical loads, including A/C and defroster. (If A/C is on, DTC P1460 will set.)

Prepare the NGS as follows:

- Key off.
- Verify that the proper PROGRAM card is inserted in the NGS.
- Connect J1962/16-way DCL cable adapter to the NGS.
- Connect NGS DCL cable adapter securely into the vehicle DCL connector
- Connect the NGS power supply cable to the vehicle battery power supply through cigar lighter (15A044) or at the battery (10653) with alligator clip adapter.

Official Licensed Product Ford Motor Company

6 Can be purchased as a separate item.

DIAGNOSIS AND TESTING (Continued)

- Key on or start vehicle if necessary.
- The NGS is now ready to communicate with the PCM.

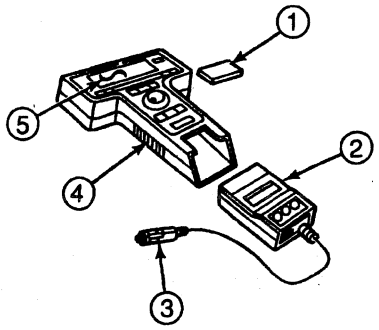

DD0750-A

Item	Description
1	Program Card (Insert into Back of Control Unit)
2	Vehicle Interface Module
3	Power Cable Connector
4	Control Unit
5	LCD Screen

Quick Test 3.0 — Key On, Engine Off (KOEO)

CAUTION: Do not replace parts based on a code. Perform pinpoint tests first.

Some special considerations for Key On, Engine Off Quick Test include the following:

- The KOEO test provides hard Diagnostic Trouble Codes (DTCs) present at the time of testing.
- Always repair the hard DTCs first.

Performing KOEO

- Perform visual inspection and vehicle preparation as required.
- Select VEHICLE AND ENGINE SELECTION menu.
- Select year, engine, model with the appropriate qualifier if needed, for example, transmission or 49-state/Cal.
- Select DIAGNOSTIC DATA LINK menu.
- Select DIAGNOSTIC TEST MODE menu.
- Select KOEO ON-DEMAND SELF TEST.
- Follow operating instructions from the NGS menu screen.
- Record all DTCs displayed.
- Repair non-transmission DTCs first since they can directly affect the operation of the transmission (7003). Road test and repeat Quick Tests to verify the repair.

Quick Test 4.0 — Continuous Memory Codes

Continuous DTCs are concerns that were detected during normal vehicle operation. These codes are retained for 40 warm-up cycles.

Some special considerations for continuous DTC testing include the following:

- The cause of some continuous DTCs may have been eliminated if KOEO/KOER DTCs were repaired. Always retest and repair any DTCs that still remain.
- If DTCs are present, refer to the Diagnostic Trouble Code Chart in the Diagnosis and Testing portion of this section for repair information. Erase DTC, perform the Transmission Drive Cycle Test and repeat all Quick Test procedures after completing repair on the DTCs.
- If the Continuous Test passes (P1111) and a concern is still present, refer to the Diagnosis by Symptom Index under Diagnosis by Symptom in the Diagnosis and Testing portion of this section. Also, refer to OASIS and TSBs for concern diagnosis.

Performing Continuous DTC Tests:

- Select VEHICLE AND ENGINE SELECTION menu.
- Select year, engine, model with the appropriate qualifier if needed, for example, transmission or 49-state/Cal.
- Select DIAGNOSTIC DATA LINK menu.
- Select DIAGNOSTIC TEST MODE menu.
- Select RETRIEVE CONTINUOUS CODES.
- Follow operating instructions from the NGS menu screen.
- Record all DTCs displayed.
- Clear DTCs.
- Perform Transmission Drive Cycle Test.
- Rerun Continuous DTC Test. If DTCs have returned, repair as required. Road test and rerun all DTC test procedures.

Quick Test 5.0 — Key On, Engine Running (KOER)

The Engine Running Quick Test provides hard DTCs only.

Some special considerations for KOER Quick Test include the following:

- Follow the menu screen instructions as they appear.
- If a DTC appears after the KOER test, an abnormal operation is present. Refer to the Diagnostic Trouble Code Chart in the Diagnosis and Testing portion of this section for repair information.

Performing KOER

- Perform visual inspection and vehicle preparation as required.
- Select VEHICLE AND ENGINE SELECTION menu.

Official Licensed Reproduction
Ford Motor Company

DIAGNOSIS AND TESTING (Continued)

- Select year, engine, model with the appropriate qualifier if needed, for example, transmission or 49-state / Cal.
- Select DIAGNOSTIC DATA LINK menu.
- Select DIAGNOSTIC TEST MODE menu.
- Select KOER ON-DEMAND SELF TEST.
- Follow operating instructions from the NGS menu screen (example: turn key on, etc.) and perform brake on / off (BOO) test and cycle the transmission control switch (TCS) on and off, if so equipped.
- Record all DTCs displayed.
- Repair all non-transmission DTCs first since they can directly affect the operation of the transmission. Road test and repeat Quick Tests to verify repair.

Special Test Modes

- Output Test Mode
- PCM Reset Mode (Clearing DTCs)

Output Test Mode

CAUTION: Safety must be observed when using output test mode. When all outputs are on and the electric fuel pump is energized, make sure the fuel system is intact and is not being repaired at that time. When low-speed or high-speed cooling fans are turned on, make sure fan blades are clear of any obstruction.

NOTE: As a safety precaution, the Output Test Mode will default to its normal state after 10 minutes, after the vehicle is started or after cycling the ignition switch (11572) off and on.

The Output Test Mode (OTM) aids in servicing output actuators associated with the PCM. It allows the technician to energize and de-energize most of the system output actuators on command. When entering OTM, the outputs can be turned off and on without controlling the cooling fans. The low- and high-speed cooling fans can be turned on separately without energizing the other outputs.

Accessing Output Test Mode

New Generation Star

Enter OTM with the ignition key on and the engine off.

- Perform the necessary vehicle preparation and visual inspection.
- Connect scan tool to DLC.
- Select VEHICLE & ENGINE SELECTION menu.
- Select NEW VEHICLE YEAR & MODEL.
- Enter year, engine, model with the appropriate qualifier, if needed, for example, transmission, 49-state / Cal.
- Select DIAGNOSTIC DATA LINK.
- Select PCM — POWERTRAIN CTRL MODULE.
- Select ACTIVE COMMAND MODES.
- Select OUTPUT TEST MODE.
- Turn key on.
- Follow operating instructions from the menu.
- Select the mode (i.e., ALL ON, ALL OFF, HIGH SPEED FAN or LOW SPEED FAN).
- Select START to turn outputs on (may link up to PIDs).
- Select STOP to turn outputs off.

PCM RESET Mode (Clearing DTCs) (EEC-V Only)

The PCM RESET Mode provides a means for the NGS to command the PCM to clear all DTCs. When resetting the PCM, a DTC No. P1000 will be set in the PCM until all OBDII systems or components have been monitored during the OBDII Drive Cycle. The following is what happens when a PCM reset is performed:

- clears the DTCs
- clears the freeze frame data
- clears the oxygen sensor test data
- resets the status of the OBDII system monitors
- sets DTC P1000

Performing PCM RESET:

- Perform visual inspection and vehicle preparation as required.
- Select VEHICLE AND ENGINE SELECTION menu.
- Select year, engine, model with the appropriate qualifier if needed, for example, transmission or 49-state / Cal.
- Select GENERIC OBDII FUNCTIONS menu.
- Select CLEARING ALL CODES.
- Follow operating instructions from the NGS menu screen.
- Perform OBDII Drive Cycle — Clear DTC P1000.

Clearing DTC P1000

Readiness for Inspection / Maintenance Testing

In some localities it may become a legal requirement to pass an inspection / maintenance (I / M) test of the OBDII System. If the vehicle powertrain system has been repaired or its battery has just been replaced, the OBDII system is reset to NOT READY for I / M testing condition. To prepare the vehicle for this test and to clear DTC P1000, the OBDII Drive Cycle must be performed.

OBDII Drive Cycle

The following steps MUST BE RUN IN THE ORDER SHOWN. If Steps 2, 3 or 4 are interrupted, repeat the step before proceeding. Any safe driving mode is acceptable between steps.

1. NOTE: Always drive vehicle in a safe manner according to traffic conditions and obey all traffic laws.

   Start engine and drive vehicle in typical city stop-and-go traffic for at least 10 minutes after it has reached normal operating temperature.
2. Idle vehicle for at least 45 seconds, then accelerate at part throttle to near 72 km / h (45 mph).

DIAGNOSIS AND TESTING (Continued)

3. Drive to accumulate at least 4 minutes in the range of 48-72 km/h (30 to 45 mph). If stop-and-go conditions occur, the designated accumulative time must be within the 32-72 km/h (20 to 45 mph) range. No wide-open throttle (WOT) conditions should be encountered.
4. Cruise and maintain a select speed in the range of 48-64 km/h (30 to 40 mph) on a level road with throttle held steady for at least 1 minute.
5. Decelerate and idle for at least 1 minute.
6. Accelerate to 89 km/h (55 mph) at half throttle (elapsed time is about 10 seconds).
7. Cruise and maintain select speed in the range of 64-105 km/h (40-65 mph) on a level road with throttle held steady for at least 1 minute and 20 seconds.
8. Bring vehicle down to idle.
9. While the ignition key is on (vehicle at idle), check for continuous memory DTCs.
10. If system PASS, OBDII Drive Cycle is complete. If DTC P1000 is received, check monitor completion status (On-Board Readiness Menu), and repeat the drive cycle.

Other NGS Features

For further information on other diagnostic testing features using the NGS or generic scan tool, refer to the 1997 Powertrain Control/Emissions Diagnosis Manual[7] for 7.3L DI Diesel Engine, or to the 1996 PC/ED[7], for all other engines. Other diagnostic methods include the following:

- Parameter Identification (PID) Access Mode, used to monitor sensor and actuators
- Freeze Frame Data Access Mode, used to view emissions-related data values from specific PIDs
- Oxygen Sensor Monitor Mode, used to monitor the O2 sensor

Transmission Drive Cycle Test

After performing the Quick Tests, use the following Transmission Drive Cycle Test for checking E4OD continuous codes.

1. NOTE: The Transmission Drive Cycle Test must be followed exactly. Abnormal operation has to occur four times consecutively for codes 617, 618, 619, P0781, P0782, and P0783 to be set, and five times consecutively for continuous codes 628, 629, P1728, P1744, P0741, P0743.

   NOTE: When performing the Transmission Drive Cycle Test, refer to Shift Solenoid Operation Chart in the Specifications portion of this section for proper solenoid operation.

   Record and then erase Quick Test codes.
2. Warm engine to normal operating temperature.
3. Make sure transmission fluid level is correct.
4. With transmission in OVERDRIVE, moderately accelerate from stop to 80 km/h (50 mph). This allows the transmission to shift into fourth gear. Hold speed and throttle open steady for a minimum of 15 seconds.
5. With transmission in OVERDRIVE, press transmission control switch (TCIL should illuminate) and moderately accelerate from stop to 64 km/h (40 mph). This allows transmission to shift into third gear. Hold speed and throttle opening steady for a minimum of 15 seconds (30 seconds above 4000 ft).
6. Press TCS (TCIL should turn off) and accelerate from 64 km/h (40 mph) to 80 km/h (50 mph). This allows transmission to shift into fourth gear. Hold speed and throttle position steady for a minimum of 15 seconds.
7. With transmission in fourth gear and maintaining steady speed and throttle opening, apply and release brake pedal (2455) lightly (to operate stoplamps). Then hold speed and throttle steady for an additional 5 seconds (minimum).
8. Brake to a stop and remain stopped for a minimum of 20 seconds.
9. Repeat Steps 4 through 8 at least five times.
10. Perform Quick Tests and record continuous codes.

After On-Board Diagnostics

NOTE: The vehicle wiring harness, powertrain control module (PCM)(12A650) and non-transmission sensors can affect transmission operations. Repair these concerns first.

After the On-Board Diagnostics procedures are completed, repair all DTCs.

Begin with non-transmission-related DTCs, then repair any transmission-related DTCs. Refer to the following Diagnostic Trouble Code Chart for information on condition and symptoms. This chart will be helpful in referring to the proper manual(s) and to aid in diagnosing internal transmission concerns and external non-transmission inputs. The pinpoint tests are used in diagnosing electrical concerns of the E4OD transmission. Make sure the vehicle wiring harness and the powertrain control module are diagnosed as well. The Powertrain Control/Emissions Diagnosis Manual[7] will aid in diagnosing non-transmission-related electronic components.

7 Can be purchased as a separate item.

DIAGNOSIS AND TESTING (Continued)

Before Pinpoint Tests

NOTE: Prior to performing pinpoint tests, check the powertrain control module wiring harness for proper connections, bent or broken pins, corrosion, loose wires, proper routing, proper seals and their condition. Check the powertrain control module (PCM)(12A650), sensors and actuators for damage. Refer to the 1997 Powertrain Control/Emissions Diagnosis Manual[8] for 7.3L DI Diesel Engine, or to the 1996 PC/ED[8] for all other engines.

If DTCs appear while performing the diagnostics, refer to the following Diagnostic Trouble Code Chart for the appropriate procedure. Prior to entering pinpoint tests, refer to any TSBs and OASIS messages for E4OD transmission concerns.

After electrical diagnosis has been performed and a concern still exists, refer to the Diagnosis by Symptom Index under Diagnosis by Symptom in the Diagnosis and Testing portion of this section.

Diagnostic Trouble Code Chart

DIAGNOSTIC TROUBLE CODE CHART

Diagnostic Trouble Code		Component	Description	Condition	Symptom	Action
Three Digit	Four Digit					
111	P1111	System	Pass	No concern detected.	Concern not detected by PCM.	Refer to Powertrain Control/Emissions Diagnosis (PC/ED) Manual.[ab]
211[c]	P0340 P0341 P0344	DI	DI system concern.	Engine rpm circuit failure.	CKP sensor failure/engine will stall or not run. May flash TCIL.[c]	Refer to PC/ED.[ab]
126	P0237	Manifold Absolute Pressure Sensor	MAP sensor out of On-Board Diagnostics range.	Manifold absolute pressure sensor signal higher or lower than expected or no response during Dynamic Response (Goose) Test.	—	Rerun On-Board Diagnostics.
128	P0236	Manifold Absolute Pressure Sensor	Manifold absolute pressure sensor vacuum circuit failure.	Manifold absolute pressure sensor signal higher or lower than expected or no response due to vacuum hose, circuit damaged, disconnected or restricted.	Firm shift feel, late shifts at altitude.	Refer to PC/ED.[ab]
121	P1124	Throttle Position Sensor	TP sensor out of On-Board Diagnostics range.	TP sensor (gasoline engines) not at idle position during KOEO.	—	Rerun at appropriate throttle position sensor position per the engine application.
127	P0235	Manifold Absolute Pressure Sensor	MAP sensor inactive.	MAP sensor or circuit open, shorted to ground or 5V.	Firm shift feel, late shift at altitude.	Refer to PC/ED.[ab]

(Continued)

Official Licensed Product Ford Motor Company

8 Can be purchased as a separate item.

DIAGNOSIS AND TESTING (Continued)

DIAGNOSTIC TROUBLE CODE CHART (Cont'd)

Diagnostic Trouble Code		Component	Description	Condition	Symptom	Action
Three Digit	Four Digit					
633	P1781	4x4 Low Switch	4x4 low switch closed.	4x4 low switch closed / or 4x4 low indicator lamp circuit open.	Failed on — Early shift schedules in 4x2 and 4x4 HI range. Failed off — Shifts delayed in 4x4 low. **NOTE:** If the 4x4 low indicator light fuse is blown, the transmission will shift according to the 4x4 low shift schedule regardless of the transfer case position.	Refer to PC / ED.[ab]
691	P1729	4x4L	4x4 low switch failure.	4x4 low switch failure during normal vehicle operation.	Early shifts, harsh shifts, increase in electronic pressure control pressure.	Refer to PC / ED.[ab]
636	P1711	TFT Sensor	TFT sensor out of On-Board Diagnostics range.	Transmission not at operating temperature during On-Board Diagnostics.	—	Warm vehicle to normal operating temperature and rerun On-Board Diagnostics.
452	P0500 P0503 P1500 P1501	VSS	Insufficient or intermittent vehicle speed input.	PCM detected a loss of vehicle speed signal during operation.	Harsh engagements, firm shift feel, abnormal shift schedule, unexpected downshifts may occur at closed throttle, abnormal TCC operation or engages only at wide-open throttle. May flash TCIL.	Refer to PC / ED.[ab]
617[d]	P0781[d]	SS1, SS2 or Internal Transmission Components	1-2 shift error.	Engine rpm drop not detected when 1-2 shift was commanded by PCM.	Improper gear selection depending on failure mode and transmission range selector lever position. Refer to Shift Solenoid Operation Chart. Shift errors may also be due to other internal transmission concerns such as stuck valves or damaged friction material. May flash TCIL.	Refer to Pinpoint Test A.
123	P0123	TP or AP Sensor	TP or AP sensor circuit above maximum voltage (short to vehicle power).	Voltage above or below specification for On-Board Diagnostics or during normal vehicle operation.	Harsh engagements, firm shift feel, abnormal shift schedule, abnormal TCC or does not engage.	Refer to PC / ED.[ab]

(Continued)

DIAGNOSIS AND TESTING (Continued)

DIAGNOSTIC TROUBLE CODE CHART (Cont'd)

Diagnostic Trouble Code		Component	Description	Condition	Symptom	Action
Three Digit	Four Digit					
637	P0713	TFT Sensor	-40°C (-40°F) indicated, TFT sensor circuit open.	Voltage drop across TFT sensor exceeds scale set for temperature -40°C (-40°F).	TCC and stabilized shift schedule may be enabled sooner after cold start. May flash TCIL.	Refer to Pinpoint Test B.
618[d]	P0782[d]	SS1, SS2 or Internal Transmission Components	2-3 shift error.	Engine rpm drop not detected when 2-3 shift was commanded by PCM.	Improper gear selection depending on failure mode and transmission range selector lever position. Refer to Shift Solenoid Operation Chart. Shift errors may also be due to other internal transmission concerns such as stuck valves or damaged friction material. May flash TCIL.	Refer to Pinpoint Test A.
628[d]	P1728	Transmission	Transmission slippage detection.	Excessive amount of clutch slippage was detected.	Transmission slippage, erratic or no TCC operation. May flash TCIL.	Refer to Diagnosis by Symptom.
122	P0122	TP or AP Sensor	TP or AP sensor circuit below minimum voltage, (open / shorted to ground).	Voltage above or below specification for On-Board Diagnostics or during normal vehicle operation.	Harsh engagements, firm shift feel, abnormal shift schedule, abnormal TCC operation or does not engage.	Refer to PC / ED.[ab]
124	—	Throttle Position Sensor	TP sensor voltage higher than expected.	Voltage above specification.	Harsh engagements, firm shift feel, abnormal shift schedule, abnormal TCC operation or does not engage.	Refer to PC / ED.[ab]
125	P1120	Throttle Position Sensor	TP sensor voltage lower than expected.	Voltage below specification.	Harsh engagements, firm shift feel, abnormal shift schedule, abnormal TCC operation or does not engage.	Refer to PC / ED.[ab]
632	P1780	TCS	TCS not changing state.	TCS not cycled during On-Board Diagnostics / circuit open or shorted.	No overdrive cancel when switch is cycled.	Rerun diagnostics and cycle switch. Refer to PC / ED.[ab]
638	P0712	TFT Sensor	157°C (315°F) indicated, TFT sensor circuit grounded.	Voltage drop across TFT sensor exceeds scale set for temperature of 157°C (315°F).	TCC and stabilized shift schedule may be enabled sooner after cold start. May flash TCIL.	Refer to Pinpoint Test B.

(Continued)

DIAGNOSIS AND TESTING (Continued)

DIAGNOSTIC TROUBLE CODE CHART (Cont'd)

Diagnostic Trouble Code		Component	Description	Condition	Symptom	Action
Three Digit	Four Digit					
539	P1460 P1463 P1464	A/C	A/C switch error.	DTC may result from A/C ON during On-Board Diagnostics.	Failed on — electronic pressure control pressure slightly low with A/C off. Failed off — electronic pressure control pressure slightly low with A/C on.	Refer to PC/ED.[ab]
654	P1705	TR Sensor	TR sensor not in park.	On-Board Diagnostics not run in park.	—	Rerun On-Board Diagnostics in park. Refer to Pinpoint Test D.
634	P0705	TR Sensor	TR sensor out of range.	Indicated voltage drop across TR sensor exceeds limits established for each position.	Harsh engagements, firm shift feel. May flash TCIL.	Refer to Pinpoint Test D.
657	P1783	TFT Sensor	Transmission overtemp condition.	Transmission fluid temperature exceeded 132°C (270°F).	Slight increase in electronic pressure control pressure. May flash TCIL.	Refer to Pinpoint Test B.
667	P0707	TR Sensor	TR sensor circuit below minimum voltage.	TR sensor circuit or PCM shorted or grounded.	Increase in electronic pressure control pressure.	Refer to Pinpoint Test D.
668	P0708	TR Sensor	TR sensor circuit above maximum voltage.	TR sensor, circuit or PCM indicates open.	Increase in electronic pressure control pressure.	Refer to Pinpoint Test D.
157, 158, 159, 184, 185	P0102, P0103, P1100, P1101	MAF Sensor	MAF sensor DTC.	MAF sensor system has a malfunction which may cause a transmission concern.	High electronic pressure control pressure. Firm shifts and engagements. May flash TCIL.	Refer to PC/ED.[ab]
—	P0107	BARO	BARO circuit failure.	BARO signal lower than expected.	Firm shift feel, late shifts at altitude.	Refer to PC/ED.[ab]
—	P0108	BARO	BARO circuit failure.	BARO signal higher or lower than expected.	Firm shifts, late shifts at altitude.	Refer to PC/ED.[ab]
—	P1280	ICP Sensor	ICP sensor circuit failure. Out of range low.	Open/Grounded circuit, biased sensor or PCM.	May result in firm shifts.	Refer to PC/ED[ab] Manual.
—	P1281	ICP Sensor	ICP sensor circuit failure. Out of range high.	Short circuit to 5 volt ref., biased sensor or PCM.	May result in firm shifts.	Refer to PC/ED[a,b] Manual.

(Continued)

DIAGNOSIS AND TESTING (Continued)

DIAGNOSTIC TROUBLE CODE CHART (Cont'd)

Diagnostic Trouble Code		Component	Description	Condition	Symptom	Action
Three Digit	Four Digit					
619[d]	P0783[d]	SS1, SS2 or Internal Transmission Components	3-4 shift error.	Engine rpm drop not detected when 3-4 shift was commanded by PCM.	Improper gear selection depending on failure mode and transmission range selector lever position. Refer to Shift Solenoid Operation Chart. Shift errors may also be due to other internal transmission concerns such as stuck valves or damaged friction material. May flash TCIL.	Refer to Pinpoint Test A.
129	—	Manifold absolute pressure sensor	Insufficient MAP sensor change during dynamic response test (gasoline engines only).	Manifold absolute pressure sensor signal higher or lower than expected or no response during Dynamic Response (Goose) Test.	—	Rerun On-Board Diagnostics and perform Dynamic Response Test.
167	—	Throttle Position Sensor	Insufficient TP sensor change during dynamic response test.	Throttle not depressed during KOER.	—	Rerun On-Board Diagnostics and depress (goose) throttle when indicated.
536	P1703	Stoplight switch	Brake not actuated during On-Board Diagnostics.	Brake not cycled during KOER.	Failed on or not connected — TCC will not engage at less than one-third throttle.	
			Stoplight switch circuit failed.	Stoplight switch circuit failure.	Failed off — TCC will not disengage when brake is applied.	Refer to PC/ED.[ab]
621[e]	P0750[e]	SS1	Shift solenoid circuit failure.	SS1 circuit failed to provide voltage drop across solenoid. Circuit open or shorted or PCM driver failure during KOEO.	Improper gear selection depending on failure mode and transmission range selector lever position. Refer to Shift Solenoid Operation Chart.	Refer to Pinpoint Test A.
622[e]	P0755[e]	SS2	SS2 solenoid circuit failure.	SS2 circuit fails to provide voltage drop across solenoid. Circuit open or shorted or PCM driver failure during KOEO.	Improper gear selection depending on failure mode and transmission range selector lever position. Refer to the Shift Solenoid Operation Chart.	Refer to Pinpoint Test A.

(Continued)

DIAGNOSIS AND TESTING (Continued)

DIAGNOSTIC TROUBLE CODE CHART (Cont'd)

Diagnostic Trouble Code		Component	Description	Condition	Symptom	Action
Three Digit	Four Digit					
626[e]	1754[e]	CCS	CCS circuit failure.	CCS failed to provide voltage drop across solenoid. Circuit open or shorted or PCM driver failure during KOEO.	Failed off — no third gear engine braking in overdrive cancel. Failed on — third gear engine braking in overdrive range. Coast clutch may be damaged / eventual failure.	Refer to Pinpoint Test G.
629[e]	P0743[e]	TCC Solenoid	TCC solenoid circuit failure.	TCC solenoid circuit fails to provide voltage drop across solenoid. Circuit open or shorted or PCM driver failure during KOEO.	Short circuit — engine stalls in DRIVE or MANUAL 2 at idle with brake applied. Open circuit — TCC never engaged.	Refer to Pinpoint Test C.
631	P1779	TCIL	TCIL circuit failure.	TCIL circuit open or shorted.	Failed on — OVERDRIVE cancel mode always indicated, no flashing for electronic pressure control failure. Failed off — OVERDRIVE cancel mode never indicated, no flashing for electronic pressure control failure. May be due to wiring or PCM concern. Erratic operation (flashing) may be due to wiring concern.	Refer to PC / ED.[ab]
624[e]	P1747[e]	EPC	EPC circuit failure, shorted circuit or PCM.	Current through EPC circuit is checked and compared after a time delay. An error will be noted if tolerance is exceeded during KOEO and continuous On-Board Diagnostics.	Short circuit — causes minimum electronic pressure control pressure (minimum capacity). Limits engine torque (partial fuel shut-off, heavy misfire). Flashing TCIL. Open circuit — causes maximum electronic pressure control, harsh engagements and shifts. May flash TCIL.	Refer to Pinpoint Test E.
N/A	P0751	SS1	SS1 functional failure.	Mechanical or hydraulic failure of the shift solenoid.	Improper gear selection depending on failure mode and manual lever position.	Refer to Solenoid On / Off Chart. Refer to Pinpoint Test A.
N/A	P0756	SS2	SS2 functional failure.	Mechanical or hydraulic failure of the shift solenoid.	Improper gear selection depending on failure mode and manual lever position.	Refer to Solenoid On / Off Chart. Refer to Pinpoint Test A.

(Continued)

Official Licensed Product
Ford Motor Company

DIAGNOSIS AND TESTING (Continued)

DIAGNOSTIC TROUBLE CODE CHART (Cont'd)

Diagnostic Trouble Code		Component	Description	Condition	Symptom	Action
Three Digit	Four Digit					
N/A	P1742	TCC	TCC solenoid failed ON (California only).	TCC solenoid has failed ON by electric, mechanical or hydraulic concern.	Harsh shifts.	Refer to Pinpoint Test C.
N/A	P1743	TCC	TCC solenoid failed ON.	The PCM picked up an excessive amount of slippage during normal vehicle operation.	Harsh shifts.	Refer to Pinpoint Test C.
N/A	P1744	Transmission (California only)	Transmission slippage detected.	The PCM picked up an excessive amount of slippage during normal vehicle operation.	Transmission slippage / erratic or no TCC operation.	Refer to Diagnosis by Symptom.
625[e]	P1746[e]	EPC	PCM failure — electronic pressure control driver.	Current through EPC circuit is checked and compared after a time delay. An error will be noted if tolerance is exceeded during KOEO and continuous On-Board Diagnostics.	Short circuit — causes minimum electronic pressure control pressure (minimum capacity). Limits engine torque (partial fuel shut-off, heavy misfire). Flashing TCIL. Open circuit — causes maximum electronic pressure control, harsh engagements and shifts. May flash TCIL.	Refer to Pinpoint Test E.

a Can be purchased as a separate item.
b Where applicable, refer to the 1997 PC / ED Manual for 7.3L DI Diesel Engine and to the 1996 PC / ED Manual for all other engines.
c Distributor ignition (DI) system.
d Can also be generated by other non-electronic related transmission hardware condition.
e Output circuit check, generated only by electrical conditions.

Official Licensed Product
Ford Motor Company

Transmission Tester

Use Rotunda Transmission Tester 007-000130 or equivalent to diagnose electronically controlled transmissions (7003). The following instructions outline the setup and use of this tester in the pinpoint tests for the E4OD.

DIAGNOSIS AND TESTING (Continued)

Overlays and Adapters

E4OD Overlay for Use with E4OD Transmission

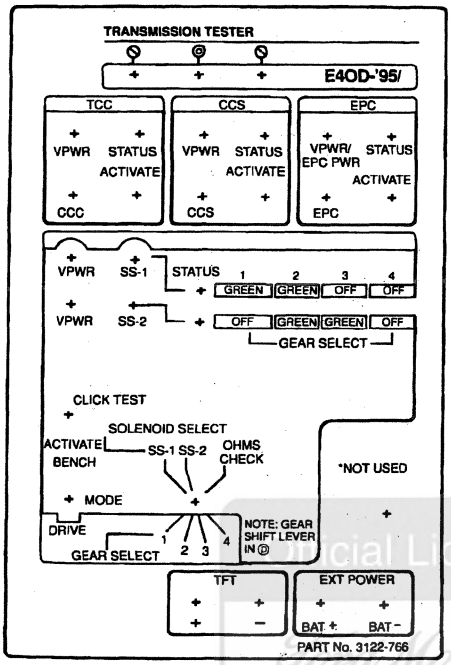

DD0529-A

Overlay and Cable Correctly Installed LEDs: Only LEDs with the (O) symbol will light when the overlay and cable match correctly.

Tester Jacks

1. **VPWR pin jacks (red):** vehicle power (VPWR) test points for solenoid circuits.
2. **Solenoid (TCC, EPC) signal line pin jacks (black):** signal line test points for solenoid circuits.
3. **BAT + (red) and BAT - (black) pin jacks:** battery reference points when measuring circuits for shorts.
4. **TFT pin jacks:** test points for transmission fluid temperature sensor.

LEDs and Controls

1. **Status LEDs:** LED off when not activated by tester (solenoid not activated, open circuit or signal line short to ground). LED will turn GREEN when activated by tester and current draw is correct. LED will turn RED when activated by tester and current draw is excessive (short to battery positive voltage [B+]). All LEDs light ORANGE during On-Board Diagnostic.
2. **Solenoid activate buttons** energize respective solenoids during click testing and activate selected circuits during DRIVE mode testing.
3. **Bench/drive switch** selects operating mode, either BENCH or DRIVE.
   - **Solenoid select/gear select switch** has three functions.
     - — BENCH MODE acts as shift solenoid selector for click testing.
     - — DRIVE MODE acts as forward gear selector in place of powertrain control module (PCM) controlled shifting. Hydraulic safety mechanisms and overrides are built into the transmission.
     - — OHMS CHECK allows you to measure resistance (ohms).

Instructions

NOTE: The Rotunda Transmission Tester 007-000130 or equivalent must be used to perform the pinpoint tests.

The Rotunda Transmission Tester and E4OD (95/) Cable and Overlay 007-00107 or equivalents allow a technician to operate the electrical portion of the transmission independently of the vehicle electronics, which allows the technician to determine transmission concerns. The transmission tester use is divided into six steps:

- preliminary inspections
- installation procedures
- static testing — engine off
- dynamic testing — engine on
- transmission range (TR) sensor testing
- disconnecting the tester

Preliminary Inspections

Before any diagnostic testing is done on vehicle, some preliminary checks must be performed, as listed below. Be sure to write down findings, especially any DTCs found, for future reference.

- Check the transmission fluid level and condition.
- Check for add-on items (phones, computers, CB radio, etc.).
- Visually inspect the wiring harness and connectors.
- Check for vehicle modifications.
- Check the shift linkage for proper adjustment.
- Verify the customer concern:
  - — upshift, downshift, coasting, engagement, noise/vibration
- The vehicle must be at normal operating temperature.
- Perform vehicle On-Board Diagnostics.
- Record all DTCs.
- Repair all non-transmission codes.

Commercial Licensed Product

DIAGNOSIS AND TESTING (Continued)

Installation Procedures

Installing the transmission tester at the transmission connector allows separation of the vehicle electronics from transmission electronics. Disconnecting normal vehicle electronics will set additional codes and cause firm shifts. (Disconnecting the transmission connector defaults transmission to maximum line pressure.)

NOTE: During tester use, additional DTCs may be set. Therefore, it is important that all codes are erased after repair has been made. To verify elimination of all codes, rerun On-Board Diagnostics.

NOTE: The following manuals should be available to assist in diagnosis of electronically controlled transmissions:

— 1997 Powertrain Control / Emissions Diagnosis Manual[9] for 7.3L DI Diesel Engine

— 1996 Powertrain Control / Emissions Diagnosis Manual[9] for engines other than 7.3L DI Diesel

— transmission tester manual (provided with tester)

1. **CAUTION: Do not attempt to pry off connectors with a screwdriver. This will damage the connector and could result in transmission concerns. If vehicle is equipped with transmission heat shield (7A434), remove it. Always reinstall the transmission heat shield when the procedure is completed.**

   CAUTION: Route all cables away from heat sources.

   Disconnect the vehicle wiring harness at transmission connector.
2. Turn the tester solenoid select switch to the OHMS CHECK position.
3. Install the appropriate overlay onto tester. Connect appropriate interface cable to transmission tester and then to the appropriate transmission connectors.
4. **CAUTION: Route gauge line away from heat sources.**

   Install a line pressure gauge into line pressure tap on transmission.
5. Plug transmission tester power supply into cigar lighter (15A044) receptacle. At this time, all LEDs should illuminate for a short period and then turn off. This is the tester internal circuit check.
6. Position bench / drive switch to BENCH mode.

Static Testing — Engine Off

Static testing procedures allow for shop testing of the transmission in the vehicle or on the bench. Completion of these tests proves out transmission electronics.

Resistance / Continuity Tests

CAUTION: For resistance checks, make sure the tester solenoid select switch is set to the OHMS CHECK position or damage to the ohmmeter may result.

- Perform the appropriate pinpoint test based on the DTCs displayed.
- Using a digital volt-ohmmeter and the transmission tester, perform the pinpoint tests as indicated based on the DTCs displayed.
- Repair as indicated by the pinpoint tests. Always retest and road test vehicle after service.

Resistance / Continuity Tests — EPC Solenoid

- Set the ohmmeter to 100-200 ohm range.
- Connect the negative lead of ohmmeter to the electronic pressure control (EPC) jack.
- Connect the positive lead of ohmmeter to the vehicle power (VPWR) jack.
- Record the resistance.
- Refer to the E4OD Solenoid Resistance Specifications chart below for values.

If out of specification, refer to Pinpoint Test E in the Diagnosis and Testing portion of this section.

Resistance / Continuity Tests — Shift Solenoid 1, Shift Solenoid 2, Torque Converter Clutch Solenoid, Coast Clutch Solenoid

- Set the ohmmeter to 100-200 ohm range.
- Connect the positive lead of ohmmeter to the appropriate vehicle power (VPWR) jack for the solenoid being tested.
- Connect the negative lead of the ohmmeter to the appropriate solenoid (shift solenoid 1 [SS1], shift solenoid 2 [SS2], torque converter clutch solenoid [TCC], coast clutch solenoid [CCC]) jack and record resistance.

Refer to the following charts for values.

If out of specification, refer to Pinpoint Test A (shift solenoid 1, shift solenoid 2), Pinpoint Test C (torque converter clutch solenoid) or Pinpoint Test G (coast clutch solenoid) in the Diagnosis and Testing portion of this section.

E4OD SOLENOID RESISTANCE SPECIFICATIONS

Solenoid	Resistance (Ohms)
Shift Solenoid 1	20-30
Shift Solenoid 2	20-30
Torque Converter Clutch Solenoid	20-30
Coast Clutch Solenoid	20-30
Electronic Pressure Control Solenoid	4.0-6.5

9 Can be purchased as a separate item.

DIAGNOSIS AND TESTING (Continued)

Resistance/Continuity Tests — Transmission Fluid Temperature (TFT) Sensor

- Set the ohmmeter to 1000-ohm (k) scale.
- Connect the ohmmeter positive lead to TFT+ jack.
- Connect the ohmmeter negative lead to TFT- jack.
- Record the resistance. Resistance will vary with temperature.
- Refer to the following chart for values.

If out of specification, refer to Pinpoint Test B in the Diagnosis and Testing portion of this section.

TFT SENSOR RESISTANCE SPECIFICATIONS

Temperature		Resistance (Ohms)
°C	°F	
(-)40-(-)20	(-)40-(-)4	967 k-248 k
(-)19-(-)1	(-)3-31	248 k-100 k
0-20	32-68	100 k-37 k
21-40	69-104	37 k-16 k
41-70	105-158	16 k-5 k
71-90	159-194	5 k-2.7 k
91-110	195-230	2.7 k-1.5 k
111-130	231-266	1.5 k-0.8 k
131-150	267-302	0.8 k-0.54 k

Solenoid Voltage Test

1. Set the tester bench/drive switch to BENCH mode.
2. Set the voltmeter to 20-volt DC range.
3. Connect the voltmeter positive lead to the appropriate solenoid vehicle power (VPWR). Connect voltmeter negative lead to the appropriate solenoid.
4. NOTE: LED will turn GREEN when solenoid activates and turn off when deactivated. LED will turn RED if an activated solenoid is shorted to B+. LED will remain off if an activated solenoid is shorted to ground or if there is no continuity.

   Using a digital volt-ohmmeter (DVOM), check for voltage across each solenoid by activating the solenoid switches. Press the appropriate switch. The LED should illuminate, the voltage should change and an audible click may be heard. If LED does not illuminate, a short to ground condition exists.
5. Observe and record values.

Dynamic Testing — Engine On

Dynamic testing allows the transmission to be proven out electronically and hydraulically.

Preliminary Setup

1. Set the bench/drive switch to DRIVE mode.
2. Rotate the gear select switch to GEAR SELECT "1" position.
3. Place the vehicle in PARK.
4. Start the engine.

EPC Solenoid Functional Test

1. Observe line pressure. Record value. Line pressure should go to maximum. If not, refer to the Diagnosis by Symptom Index under Diagnosis by Symptom in the Diagnosis and Testing portion of this section for diagnostic tips. Also, refer to Pinpoint Test E in the Diagnosis and Testing portion of this section for electronic pressure control solenoid diagnosis.
2. **CAUTION: Do not attempt to hold the electronic pressure control switch depressed (minimum line pressure) and stall the transmission (holding the vehicle with the brake while pressing the throttle with the transmission in gear). Transmission damage will result.**

   Press electronic pressure control switch. Line pressure should drop to a minimum value. Record value. If line pressure does not drop to a minimum value, refer to the Diagnosis by Symptom Index or Pinpoint Test E for the electronic pressure control solenoid.

Transmission Engagements

1. Verify that the MODE switch is in DRIVE mode.
2. Turn the GEAR SELECT dial to 1.
3. Start the engine.
4. Shift the vehicle from PARK to REVERSE.
   - Did the vehicle shift into REVERSE?
   - Was the engagement firm?
5. Depress the EPC switch. Line pressure should drop to idle pressure. While holding the EPC switch down, shift vehicle from PARK to REVERSE.
   - Did the vehicle shift into REVERSE?
   - Was the engagement smooth?
   - Shift the vehicle from REVERSE to PARK.
   - Release the EPC switch. Line pressure should rise to MAX pressure.
6. Shift the vehicle from PARK to DRIVE.
   - Did the vehicle shift into DRIVE?
   - Was the engagement firm?
7. Shift the vehicle from DRIVE to PARK.
8. Press the EPC switch. Pressure should drop to idle pressure.
9. While holding the EPC switch down, shift the vehicle from PARK to DRIVE.
   - Did the vehicle shift from PARK to DRIVE?
   - Was the engagement smooth?
10. Release the EPC switch.

Officially Licensed Product
Ford Motor Company

DIAGNOSIS AND TESTING (Continued)

Upshifts/Downshifts

1. NOTE: Upshifts and downshifts will be firm during this procedure. Pressure gauges can be removed. These tests should be performed on the road. If performed on the hoist, shift perception may not be possible.

   LEDs will turn GREEN when solenoids are activated and turn off when deactivated. Refer to the appropriate overlay for the proper status shift sequence of the shift solenoids during upshifts and downshifts.

   Move the transmission range selector lever into OVERDRIVE and accelerate to 24 km/h (15 mph). Select second gear by rotating the gear selector to SECOND.

   - Did the vehicle upshift to second gear?
   - Did the appropriate shift solenoids activate/deactivate?

2. Accelerate to 40 km/h (25 mph) and select third gear.

   - Did the vehicle upshift to third gear?
   - Did the appropriate shift solenoids activate/deactivate?

3. Accelerate to 56-72 km/h (35-45 mph) and select fourth gear.

   - Did the vehicle upshift to fourth gear?
   - Did the appropriate shift solenoids activate/deactivate?

4. Reverse the order to downshift.

   - Does the vehicle downshift from fourth to third, third to second, and second to first?
   - Did the appropriate shift solenoids activate/deactivate?

5. Does the transmission pass these tests? If not, refer to Diagnosis by Symptom in the Diagnosis and Testing portion of this section.

Torque Converter Clutch (TCC) Engagement

1. **CAUTION: Do not press torque converter clutch solenoid switch with transmission in gear and the vehicle at a stop. Damage to torque converter clutch can result.**

   NOTE: Perform this test on the road. If performed on a hoist, feeling the torque converter clutch engage may not be possible.

   Accelerate and shift the vehicle up into third gear. Hold speed steady and press the torque converter clutch solenoid switch.

   - Does the torque converter clutch engage?
   - Does the engine rpm drop?
   - Did the torque converter clutch solenoid activate?

2. Holding speed steady, release the switch.

   - Does the torque converter clutch disengage?
   - Does the rpm rise?
   - Does the TCC solenoid deactivate?

3. Does the transmission pass these tests? If not, refer to Diagnosis by Symptom in the Diagnosis and Testing portion of this section.

Coast Clutch Engagement

1. NOTE: Perform this test on the road. If performed on the hoist, the technician may not feel the coast clutch engage.

   Accelerate and shift vehicle up into third gear. Press the coast clutch solenoid switch and immediately back off the throttle.

   - Did the coast clutch engage? Did engine braking occur?
   - Did the coast clutch solenoid activate?

2. Release the CCS switch.

   - Does the CCS solenoid deactivate?
   - Does the coast clutch disengage?

3. Does the transmission pass these tests? If not, refer to Diagnosis by Symptom in the Diagnosis and Testing portion of this section.

Transmission Range (TR) Sensor Testing

Introduction

The Rotunda Transmission Tester 007-000130 or equivalent allows a technician to operate the electrical portion of the transmission range sensor. Use of the tester is divided into five steps:

- preliminary testing and diagnosis
- installation procedures
- resistance/continuity tests
- voltage test — park/neutral, backup lamp and optional circuits
- disconnecting the tester

Preliminary Testing and Diagnosis

Before any diagnostic testing is done on a vehicle, some preliminary checks must be performed, as listed below. Be sure to write down your findings, especially any DTCs found, for future reference.

- Check the transmission fluid level and condition.
- Check for add-on items (phones, computers, CB radio etc).
- Visually inspect the wiring harness and connectors.
- Check for vehicle modifications.
- Verify that the shift linkage is properly adjusted in OVERDRIVE.
- Verify that the transmission range (TR) sensor is properly adjusted in NEUTRAL.
- Verify the customer concern: upshift, downshift, coasting, engagement, noise/vibration.

Official Licensed Product Ford Motor Company

DIAGNOSIS AND TESTING (Continued)

- Vehicle must be at a normal operating temperature.
- Perform vehicle On-Board Diagnostics.
- Record all DTCs.
- Repair all non-transmission DTCs.

Installation Procedures

Installing the Rotunda Transmission Tester 007-000130, E4OD (95/) Cable and Overlay 007-00107 and Transmission Range (TR) Sensor Cable B (MLPS Manual Lever Position Sensor Cable) 007-00127 or equivalents at the transmission range (TR) sensor allows separation of the vehicle electronics from the TR sensor electronics.

During tester use, additional DTCs may be set. Therefore, it is important that all codes are erased after repair has been made. To verify elimination of all DTCs, rerun On-Board Diagnostic.

The 1997 Powertrain Control/Emissions Diagnosis Manual[10] for 7.3L DI Diesel Engine, the 1996 PC/ED[10] for all other engines, and transmission tester manual (provided with tester) should be available to assist in diagnosis of electronically controlled transmissions.

Official Licensed Product
Ford Motor Company

10 Can be purchased as a separate item.

DIAGNOSIS AND TESTING (Continued)

TR Sensor Overlay

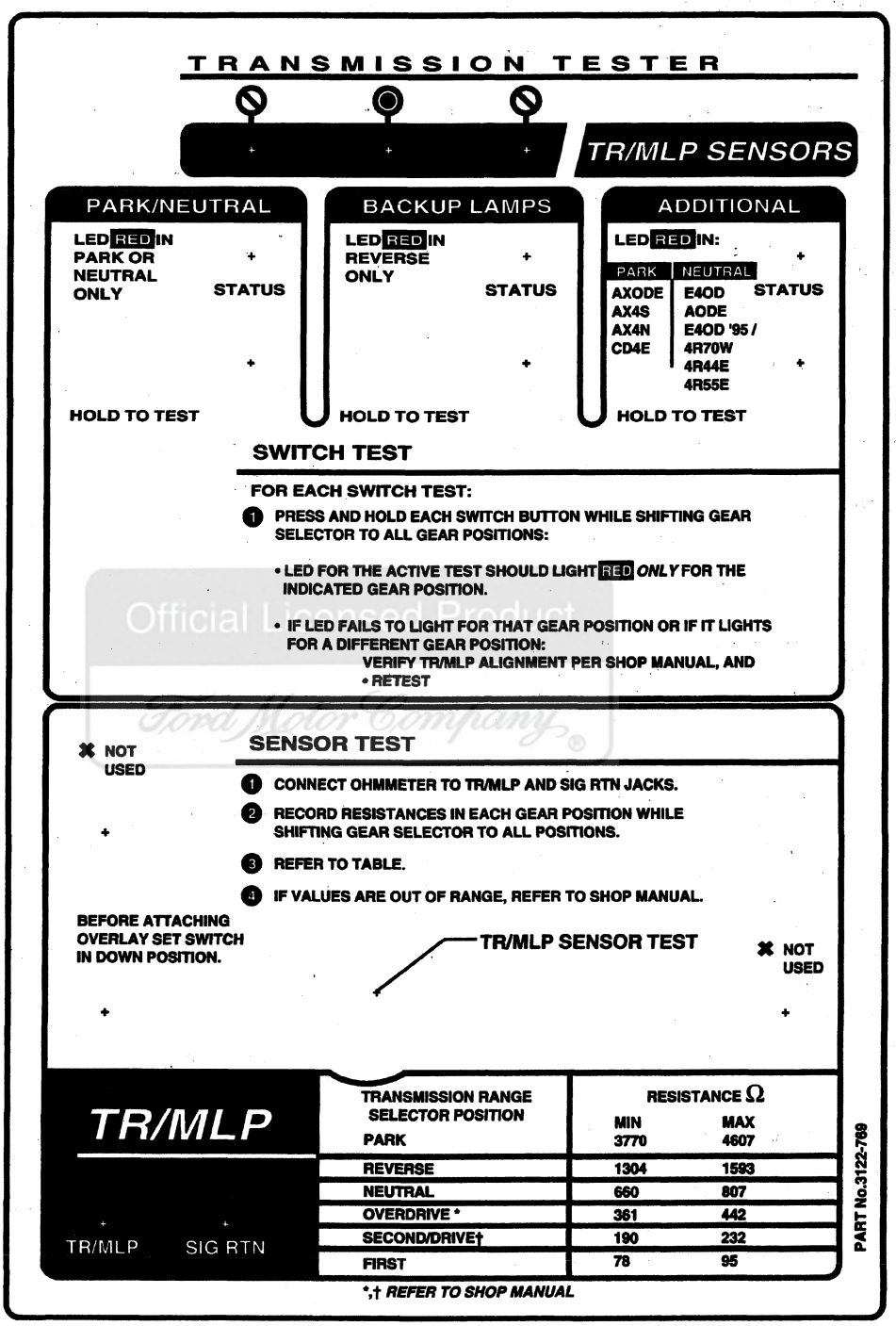

DIAGNOSIS AND TESTING (Continued)

1. **CAUTION: Do not attempt to pry off connectors with a screwdriver. This will damage the connector and could result in a transmission concern. Route all cables away from heat sources.**

   Disconnect the vehicle harness at transmission range (TR) sensor connector.
2. Set the bench/drive switch to DRIVE mode. Install transmission range (TR) sensor overlay onto tester.
3. Connect interface cable B to the transmission tester and then to the TR sensor connector.
4. Turn the test select dial to the TR/MLP SENSOR TEST position.
5. Plug the transmission tester power supply plug into cigar lighter.

At this time, all LEDs should illuminate for a short period and then turn off. This is the tester internal circuit check.

Resistance/Continuity Tests

Static testing procedures allow for shop testing of the transmission in the vehicle or on the bench. Completion of these tests proves out the transmission range (TR) sensor electronically.

1. **CAUTION: For resistance checks, make sure the tester selector switch is set to the TR SENSOR TEST position or damage to the ohmmeter can result.**

   Using a digital volt-ohmmeter, Rotunda Transmission Tester 007-000130, E4OD (95/) Cable and Overlay 007-00107 and Transmission Range (TR) Sensor Cable "B" (MLPS Manual Lever Position Sensor Cable) 007-00127 or equivalents, perform Pinpoint Test D based on the DTCs that were displayed.
2. Test the system for normal operation after the repair is completed.
3. Set ohmmeter to 1000 ohm range.
4. Connect the positive lead of the ohmmeter to the TR/MLP jack.
5. Connect the negative lead of the ohmmeter to the SIGRTN jack.
6. Move transmission range selector lever into each gear position.
7. Record resistance at each position.
8. Refer to the following chart for values.

If out of range, refer to Pinpoint Test D in the Diagnosis and Testing portion of this section.

TR SENSOR RESISTANCE SPECIFICATIONS

Transmission Gear Selector Lever Position	Resistance (Ohms)	
	Minimum	Maximum
PARK	3770	4607
REVERSE	1304	1593
NEUTRAL	660	807
OVERDRIVE	361	442
MANUAL SECOND	190	232
MANUAL 1	78	95

Voltage Test — Park/Neutral, Backup Lamp and Optional Circuits

1. Set tester selector switch to the TR SENSOR TEST position.
2. Press and HOLD each button while moving the transmission range selector lever through EACH gear position.
3. Monitor each LED.
4. NOTE: LED will turn RED when the circuit closes and turn OFF when the circuit is open.

   The status LED should indicate RED only in the indicated position. Refer to overlay.
5. If the LED does NOT indicate RED in the desired position, or indicates RED in another position, first verify transmission range (TR) sensor alignment and then retest. If the sensor fails, replace.

Disconnecting the Tester

1. **CAUTION: Do not attempt to pry off connectors with a screwdriver. This will damage the connector and could result in a transmission concern.**

   Disconnect the transmission tester from the transmission range (TR) sensor connector.
2. Reinstall the vehicle wiring harness. Verify the connection by pulling up on the harness.
3. Disconnect the transmission tester power lead from vehicle.
4. Erase all DTCs, using the procedures in the Powertrain Control/Emissions Diagnosis Manual.[11]
5. Rerun the on-board diagnostic tests to receive a pass code.
6. Verify that the customer concern has been eliminated.

11 Can be purchased as a separate item.

Official Licensed Product Ford Motor Company

DIAGNOSIS AND TESTING (Continued)

Pinpoint Tests

Transmission Vehicle Harness Connectors

Transmission Solenoid Body

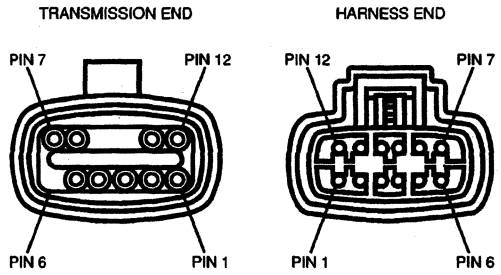

12-WAY CONNECTOR

D11838-D

12-Way Connector Pin	Description	Connector Pin			
		EEC-V Gas	EEC-V Diesel (Cal.)	EEC-V Diesel (49-State)	EEC-IV 5.8L (0/8,500 GVW) 7.5L (0/14,000 GVW)
1	Vehicle Power (VPWR)	71, 97	71, 97	71, 97	37, 57
2	Shift Solenoid 2	1	11	1	19
3	Shift Solenoid 1	27	6	27	52
4	Torque Converter Clutch	54	54	28	53
5	Coast Clutch Solenoid	53	20	53	55
6	—	—	—	—	—
7	Transmission Fluid Temperature Sensor	37	37	37	42
8	Signal Return (SIG RTN)	91	91	91	46
9	—	—	—	—	—
10	—	—	—	—	—
11	Electronic Pressure Control	81	81	81	38
12	Electronic Pressure Control Power	71, 97	71, 97	71, 97	37, 57

Official Licensed Product
Ford Motor Company

DIAGNOSIS AND TESTING (Continued)

Transmission Range Sensor

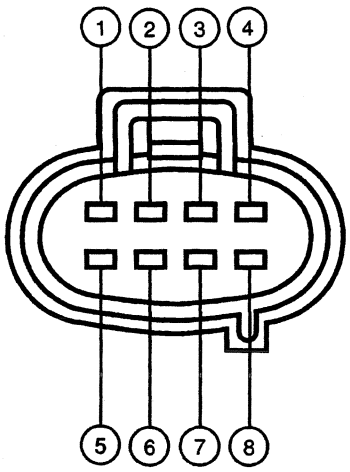

TRANSMISSION RANGE SENSOR E4OD TRANSMISSION

C11505-B

Pin Number	Circuit	Circuit Function
1	—	Not Used
2	359 (GY/R)	Sensor Signal Return
3	199 (LB/Y)	Transmission Range Sensor to PCM
4	—	Not Used
5	33 (W/PK)	Starter Circuit
6	140 (BK/PK)	Backup Lamp
7	298 (P/O)	Fused Accessory Feed
8	32 (R/LB)	Starter Circuit

Ford Licensed Product
Ford Motor Company

Shift Solenoids

Use the following shift solenoid operation information when performing Pinpoint Test A.

SOLENOID OPERATION CHART

Transmission Range Selector Lever Position	PCM Commanded Gear	SS1	SS2	TCC	CCS
P/R/N	1	ON	OFF	OFF	OFF
D	1	ON	OFF	a	a
D	2	ON	ON	a	a
D	3	OFF	ON	a	a
D	4	OFF	OFF	a	OFF
D Cancel	First Through Third Gear Only, SS1, SS2, TCC, Same As Overdrive, CCS Always On.				
MANUAL 2	2	a	a	a	ON
MANUAL 1	2	OFF	OFF	OFF	ON
MANUAL 1	1	ON	OFF	OFF	ON

a Powertrain control module-controlled.

Shift Solenoid Failure Mode Charts

Shift Solenoid Failure Always OFF

Failed OFF due to PCM (12A650) / vehicle wiring concerns; solenoid electrically or hydraulically stuck off.

Shift Solenoid Failure Always ON

Failed ON due to PCM / vehicle wiring concerns; solenoid electrically or hydraulically stuck on.

SS1 ALWAYS OFF

PCM Gear Commanded	Gear Lever Position		
	D	2	1
	Actual Gear Obtained		
1	4	2	1
2	3	2	2
3	3	2	2
4	4	2	2

DIAGNOSIS AND TESTING (Continued)

SS2 ALWAYS OFF

PCM Gear Commanded	Gear Lever Position		
	D	2	1
	Actual Gear Obtained		
1	1	2	1
2	1	2	1
3	4	2	2
4	4	2	2

SS2 ALWAYS ON

PCM Gear Commanded	Gear Lever Position		
	D	2	1
	Actual Gear Obtained		
1	2	2	1
2	2	2	1
3	3	2	2
4	3	2	2

SS1 ALWAYS ON

PCM Gear Commanded	Gear Lever Position		
	D	2	1
	Actual Gear Obtained		
1	1	2	1
2	2	2	1
3	2	2	1
4	1	2	1

PINPOINT TEST A: SHIFT SOLENOIDS

Test Step		Result	Action to Take
A1	E4OD ELECTRONIC DIAGNOSTICS		
	• Make sure the transmission harness connector is fully seated, terminals are fully engaged in connector and in good condition before proceeding. • Connect Rotunda New Generation Star (NGS) Tester 007-00500 or equivalent. • Perform KOEO test until continuous DTCs have been displayed. • Enter Output Test Mode (OTM). Refer to Special Test Modes in this section. • Select ALL ON Mode. Press START to turn outputs ON. Press STOP to turn outputs OFF. • **Does vehicle enter OTM?**	Yes ▶ No ▶	REMAIN in OTM. GO to **A2**. PRESS START. If vehicle does not enter OTM, REFER to 1996 PC/ED Manual Output Test Mode Not Functioning, Pinpoint Test MB.
A2	CHECK ELECTRICAL SIGNAL OPERATION		
	CAUTION: Remove heat shield from transmission before removing connector. Remove solenoid body connector by pushing on center tab and pulling on harness connector. Do not attempt to pry tab with a screwdriver. Reinstall heat shield when procedure is completed. • Disconnect transmission connector. • Using a mirror, inspect both ends of connector for damaged or pushed-out pins, corrosion, loose wires, and missing or damaged seals. NOTE: Refer to Transmission Vehicle Harness Connectors preceding this pinpoint test. • Connect a volt-ohmmeter positive lead to vehicle power (VPWR) circuit and negative test lead to appropriate solenoid signal circuit of transmission vehicle harness connector. • Place volt-ohmmeter on 20-volt scale. • While observing volt-ohmmeter, press start and stop to cycle solenoid output On and Off. • **Is the solenoid output voltage changed to approximately battery voltage?**	Yes ▶ No ▶	GO to **A5**. GO to **A3**.

Licensed Product Ford Motor Company

DIAGNOSIS AND TESTING (Continued)

PINPOINT TEST A: SHIFT SOLENOIDS (Continued)

Test Step		Result ▶	Action to Take
A3	CHECK CONTINUITY OF SOLENOID SIGNAL AND VEHICLE POWER HARNESS CIRCUITS		
	• Turn ignition switch off. • Make sure transmission harness connector is disconnected. • Disconnect powertrain control module. Inspect for damaged or pushed-out pins, corrosion, or loose wires. • Install Rotunda EEC-IV 60-Pin Breakout Box 014-00322, or EEC-V 104-Pin Breakout Box 014-00950 or equivalent. Leave PCM disconnected. NOTE: Refer to Transmission Vehicle Harness Connectors preceding this pinpoint test. • Measure resistance between appropriate PCM signal test pin at Breakout Box and signal pin at transmission harness connector. • Measure resistance between appropriate VPWR test pins at Breakout Box and VPWR pin at transmission harness connector. • **Is each resistance less than 5.0 ohms?**	Yes ▶ No ▶	GO to **A4**. SERVICE open circuit(s). REMOVE Breakout Box. RECONNECT all components. REPEAT Quick Tests.
A4	CHECK SOLENOID HARNESS FOR SHORTS TO POWER AND GROUND		
	• Make sure Breakout Box is installed and PCM is disconnected. • Make sure transmission harness connector is disconnected. NOTE: Refer to Transmission Vehicle Harness Connectors preceding this pinpoint test. • Measure resistance between appropriate PCM signal test pin and VPWR test pins at Breakout Box. • Measure resistance between appropriate PCM signal test pin and ground test pins at Breakout Box and chassis ground. • **Is each resistance greater than 10,000 ohms?**	Yes ▶ No ▶	GO to **A5**. SERVICE short circuit. REMOVE Breakout Box. RECONNECT all components. REPEAT Quick Tests.
A5	SOLENOID FUNCTIONAL TEST		
	• Make sure that the vehicle harness is disconnected at the transmission connector. • Install Rotunda Transmission Tester 007-000130 and E4OD (95/) Cable and Overlay 007-00107 or equivalents. • NOTE: LED will turn GREEN when solenoid activates and turn OFF when deactivated. LED will turn RED if activated solenoid is shorted to B+. LED will remain OFF if an activated solenoid is shorted to ground or no continuity. Perform the Solenoid Voltage Test under Static Testing — Engine Off. • **Do solenoids activate (LED GREEN)?**	Yes ▶ No ▶	GO to **A6**. GO to **A7**.
A6	TRANSMISSION DRIVE TEST		
	• Reconnect PCM. • Perform Dynamic Testing — Engine On procedures. • **Does vehicle upshift when commanded by the tester?**	Yes ▶ No ▶	REPLACE PCM. ERASE all codes and PERFORM Transmission Drive Cycle Test in this section. REPEAT Quick Tests. If DTC's are still present, REFER to Diagnosis by Symptom Routines. GO to **A7**.

Official Licensed Product

DIAGNOSIS AND TESTING (Continued)

PINPOINT TEST A: SHIFT SOLENOIDS (Continued)

Test Step		Result	Action to Take
A7	CHECK RESISTANCE OF SOLENOID		
	• Set bench / drive switch to BENCH mode. • Rotate gear selector switch to OHMS CHECK position. • Connect a volt-ohmmeter negative lead to the SS-1 jack and positive lead to VPWR jack on tester. This is to test shift solenoid 1. • Record resistance. • Connect a volt-ohmmeter negative lead to the SS-2 jack and positive lead to the VPWR jack on tester. This is to test shift solenoid 2. 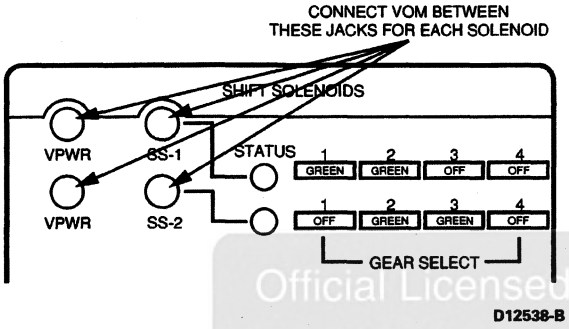 • **Is the resistance for each solenoid between 20 and 30 ohms?**	Yes ▶ No ▶	GO to **A8**. REPLACE solenoid body assembly. RECORD and ERASE codes. REPEAT Quick Tests.
A8	CHECK SOLENOID FOR SHORT TO GROUND		
	• Check for continuity between BAT- (engine ground) and appropriate jack with a digital volt-ohmmeter or other low current tester (less than 200 milliamps). • Connection should show infinite resistance (no continuity). 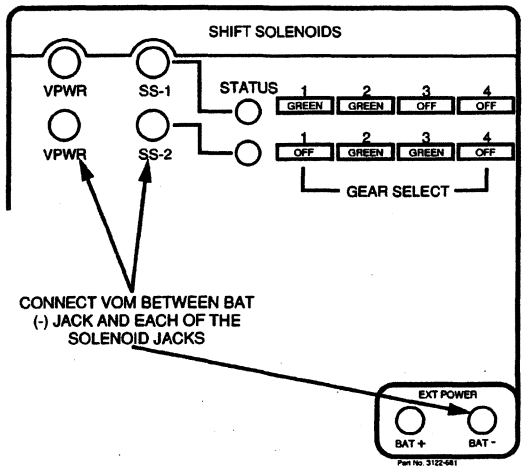 • **Does connection show continuity?**	Yes ▶ No ▶	REPLACE solenoid body assembly. RECORD and ERASE codes. REPEAT Quick Tests. GO to Diagnosis by Symptom.

Official Licensed Product Ford Motor Company

DIAGNOSIS AND TESTING (Continued)

PINPOINT TEST B: TRANSMISSION FLUID TEMPERATURE (TFT) SENSOR

Test Step		Result ▶	Action to Take
B1	E4OD ELECTRONIC DIAGNOSIS		
	• Make sure transmission harness connector is fully seated, terminals are fully engaged in connector and in good condition before proceeding. • **Have items been checked?**	Yes ▶ No ▶	GO to **B2**. PERFORM checks. ERASE codes. REPEAT Quick Tests.
B2	CHECK ELECTRICAL SIGNAL OPERATION		
	• Turn ignition switch off. **CAUTION: Remove heat shield from transmission before removing connector. Remove solenoid body connector by pushing on center tab and pulling on harness connector. Do not attempt to pry tab with a screwdriver. Reinstall heat shield when procedure is completed.** • Disconnect transmission connector. • Using a mirror, inspect both ends of connector for damaged or pushed-out pins, corrosion, loose wires, and missing or damaged seals. NOTE: Refer to Transmission Vehicle Harness Connectors preceding Pinpoint Test A. • Connect a volt-ohmmeter positive test lead to transmission fluid temperature sensor signal circuit and negative test lead to Signal Return (SIG RTN) circuit of transmission harness connector. • Place volt-ohmmeter on 20-volt scale. • Turn key on, engine off. • **Is voltage between 4.75 and 5.25 volts?**	Yes ▶ No ▶	GO to **B5**. GO to **B3**.
B3	CHECK CONTINUITY OF TRANSMISSION FLUID TEMPERATURE SENSOR AND SIGNAL RETURN CIRCUITS		
	• Turn ignition switch off. • Make sure that the vehicle harness is disconnected at the transmission connector. • Disconnect powertrain control module. Inspect for damaged or pushed-out pins, corrosion or loose wires. • Install Rotunda EEC-IV 60-Pin Breakout Box 014-00322 or EEC-V 104-Pin Breakout Box 014-00950 or equivalent. Leave PCM disconnected. NOTE: Refer to Transmission Vehicle Harness Connectors preceding Pinpoint Test A. • Measure resistance between appropriate PCM signal test pin at Breakout Box and signal pin at transmission harness connector. • Measure resistance between appropriate PCM signal return (SIG RTN) test pin at Breakout Box and signal return (SIG RTN) pin at transmission harness connector. • **Is each resistance less than 5.0 ohms?**	Yes ▶ No ▶	GO to **B4**. SERVICE open circuit(s). REMOVE Breakout Box. RECONNECT all components. ERASE codes. REPEAT Quick Tests.
B4	CHECK TRANSMISSION FLUID TEMPERATURE SENSOR CIRCUIT FOR SHORT TO VEHICLE POWER AND GROUND		
	• Make sure Breakout Box is installed and PCM is disconnected. • Make sure transmission harness connector is disconnected. NOTE: Refer to Transmission Vehicle Harness Connectors preceding Pinpoint Test A. • Measure resistance between appropriate TFT signal test pin and ground test pins at the Breakout Box and chassis ground. • Measure resistance between appropriate TFT signal test pin and VPWR test pins at Breakout Box. • **Is each resistance greater than 10,000 ohms?**	Yes ▶ No ▶	GO to **B5**. SERVICE short circuit. REMOVE Breakout Box. RECONNECT all components. ERASE codes. REPEAT Quick Tests.

Official Licensed Product Ford Motor Company

DIAGNOSIS AND TESTING (Continued)

PINPOINT TEST B: TRANSMISSION FLUID TEMPERATURE (TFT) SENSOR (Continued)

Test Step		Result ▶	Action to Take
B5	CHECK RESISTANCE OF TRANSMISSION FLUID TEMPERATURE SENSOR		
	• Make sure the vehicle harness is disconnected at the transmission connector. Install Rotunda Transmission Tester 007-000130 and E4OD (95/) Cable and Overlay 007-00107 or equivalents to transmission connector. • Set bench/drive switch to BENCH mode. Rotate gear selector switch to OHMS/DIODE CHECK position. • Connect a volt-ohmmeter negative lead to TFT- jack and positive lead to TFT+ jack on tester. • Perform Tests 1 and 2. NOTE: While performing Tests 1 and 2 observe resistances. — Code P0713/637 is set if resistance value exceeds 869K ohms (open circuit). — Code P0712/638 is set if resistance value falls below 597 ohms (short circuit). 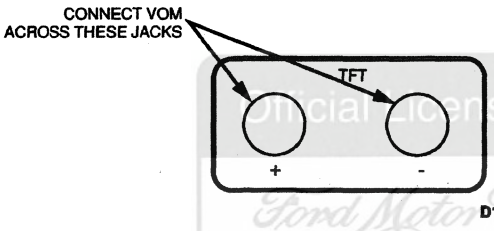 **TEST 1** • Record resistance. • Resistance should be approximately in the following ranges: **TRANSMISSION FLUID TEMPERATURES**	Yes ▶ No ▶	GO to **B6**. REPLACE solenoid assembly. RECORD and ERASE codes. REPEAT Quick Tests.

°C	°F	Resistance (Ohms)
(-)40-(-)20	(-)40-(-)4	967 k-248 k
(-)19-(-)1	(-)3-31	248 k-100 k
0-20	32-68	100 k-37 k
21-40	69-104	37 k-16 k
41-70	105-158	16 k-5 k
71-90	159-194	5 k-2.7 k
91-110	195-230	2.7 k-1.5 k
111-130	231-266	1.5 k-0.8 k
131-150	267-302	0.8 k-0.54 k

TEST 2
- Check for intermittent short or open.
  - — If resistance was between 0.8 k and 100 k ohms, perform following test:
    - (a) If transmission is cold, start and run engine until transmission reaches its normal operating temperature. If transmission is warm, allow to cool.
    - (b) Check transmission fluid temperature sensor resistance again.
- Compare resistance with initial resistance. Resistance should decrease if transmission was warmed and should increase if transmission was allowed to cool. If correct change in resistance occurs, repeat Quick Tests.
- **Is resistance within the specified range?**

Official Licensed Product Ford Motor Company

DIAGNOSIS AND TESTING (Continued)

PINPOINT TEST B: TRANSMISSION FLUID TEMPERATURE (TFT) SENSOR (Continued)

Test Step		Result ▶	Action to Take
B6	CHECK TRANSMISSION FLUID TEMPERATURE SENSOR FOR SHORT TO GROUND		
	• Check for continuity between engine ground (BAT-) and appropriate jack (TFT- or TFT+) using a volt-ohmmeter or other low current tester (less than 200 milliamps). — Connection should show infinite resistance (no continuity). 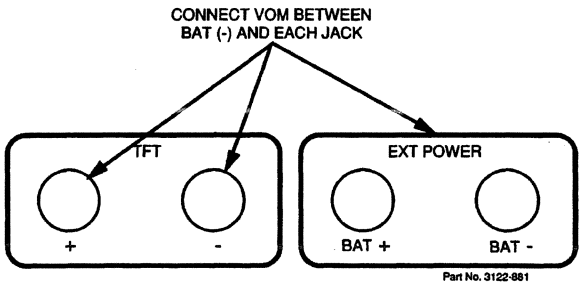 D12543-B • **Does the connection show continuity?**	Yes ▶ No ▶	REPLACE solenoid assembly. REPEAT Quick Tests. REPLACE PCM. REPEAT Quick Tests. If codes are present and overtemp condition existed, CHECK fluid condition. CHECK overheat condition under Diagnosis by Symptom. SERVICE as required. REPEAT Quick Tests.

PINPOINT TEST C: TORQUE CONVERTER CLUTCH (TCC) SOLENOID

Test Step		Result ▶	Action to Take
C1	E4OD ELECTRONIC DIAGNOSTICS		
	• Make sure transmission harness connector is fully seated, terminals are fully engaged in connector and in good condition before proceeding. • Connect Rotunda New Generation Star (NGS) Tester 007-00500 or equivalent. • Perform KOEO test until continuous DTCs have been displayed. • Enter Output Test Mode (OTM). Refer to Special Test Modes in this section. • Select ALL ON Mode. Press START to turn outputs ON. Press STOP to turn outputs OFF. • **Does vehicle enter OTM?**	Yes ▶ No ▶	REMAIN in OTM. GO to **C2**. PRESS START. If vehicle does not enter OTM, REFER to 1996 PC/ED Manual Output Test Mode Not Functioning, Pinpoint Test MB.
C2	CHECK ELECTRICAL SIGNAL OPERATION		
	CAUTION: Remove heat shield from transmission before removing connector. Remove solenoid body connector by pushing on center tab and pulling on harness connector. Do not attempt to pry tab with a screwdriver. Reinstall heat shield when procedure is completed. • Disconnect transmission connector. • Using a mirror, inspect both ends of connector for damaged or pushed-out pins, corrosion, loose wires, and missing or damaged seals. NOTE: Refer to Transmission Vehicle Harness Connectors preceding Pinpoint Test A. • Connect a volt-ohmmeter positive test lead to VPWR circuit and negative test lead to solenoid signal circuit of transmission vehicle harness connector. • Place volt-ohmmeter on 20-volt scale. • While observing volt-ohmmeter, press start and stop to cycle solenoid output On and Off. • **Is the solenoid output voltage changed to approximately battery voltage?**	Yes ▶ No ▶	GO to **C5**. GO to **C3**.

Ford Motor Company Official Licensed Product

DIAGNOSIS AND TESTING (Continued)

PINPOINT TEST C: TORQUE CONVERTER CLUTCH (TCC) SOLENOID (Continued)

Test Step		Result ▶	Action to Take
C3	CHECK CONTINUITY OF SOLENOID SIGNAL AND VEHICLE POWER HARNESS CIRCUITS		
	• Turn ignition switch off. • Make sure transmission harness connector is disconnected. • Disconnect powertrain control module. Inspect for damaged or pushed-out pins, corrosion, or loose wires. • Install Rotunda EEC-IV 60-Pin Breakout Box 014-00322, or EEC-V 104-Pin Breakout Box 014-00950 or equivalent. Leave PCM disconnected. NOTE: Refer to Transmission Vehicle Harness Connectors preceding Pinpoint Test A. • Measure resistance between appropriate PCM signal test pin at Breakout Box and signal pin at transmission harness connector. • Measure resistance between appropriate VPWR test pins at Breakout Box and VPWR pin at transmission harness connector. • **Is each resistance less than 5.0 ohms?**	Yes ▶ No ▶	GO to **C4**. SERVICE open circuit(s). REMOVE Breakout Box. RECONNECT all components. REPEAT Quick Tests.
C4	CHECK SOLENOID HARNESS FOR SHORTS TO POWER AND GROUND		
	• Make sure Breakout Box is installed and PCM is disconnected. • Make sure transmission harness connector is disconnected. NOTE: Refer to Transmission Vehicle Harness Connectors preceding Pinpoint Test A. • Measure resistance between appropriate PCM signal test pin and VPWR test pins at the Breakout Box. • Measure resistance between PCM signal test pin and ground test pins at Breakout Box and chassis ground. • **Is each resistance greater than 10,000 ohms?**	Yes ▶ No ▶	GO to **C5**. SERVICE short circuit. REMOVE Breakout Box. RECONNECT all components. REPEAT Quick Tests.
C5	SOLENOID FUNCTIONAL TEST		
	• Make sure transmission harness connector is disconnected. • Install Rotunda Transmission Tester 007-000130 or equivalent. NOTE: LED will turn GREEN when solenoid activates and turn OFF when deactivated. LED will turn RED if activated solenoid is shorted to B+. LED will remain OFF if an activated solenoid is shorted to ground or no continuity. • Perform the Solenoid Voltage Test under Static Testing — Engine Off. • **Does solenoid activate (LED GREEN)?**	Yes ▶ No ▶	GO to **C6**. GO to **C7**.
C6	TRANSMISSION DRIVE TEST		
	• Reconnect PCM. • Perform Dynamic Testing — Engine On procedures. • **Does torque converter clutch activate when commanded by tester and does the engine rpm drop?**	Yes ▶ No ▶	REPLACE PCM. PERFORM Transmission Drive Cycle Test in this section. REPEAT Quick Tests. If symptoms are still present, REFER to Torque Converter Clutch Operation Concerns, under Diagnosis by Symptom, in the Diagnosis and Testing portion of this section. GO to **C7**.

Official Ford Publication Product

DIAGNOSIS AND TESTING (Continued)

PINPOINT TEST C: TORQUE CONVERTER CLUTCH (TCC) SOLENOID (Continued)

Test Step		Result	Action to Take
C7	CHECK RESISTANCE OF SOLENOID		
	• Set bench / drive switch to BENCH mode. • Rotate gear select switch to OHMS CHECK position. • Connect a volt-ohmmeter negative lead to torque converter clutch solenoid (TCC) jack and positive lead to vehicle power (VPWR) jack on tester. • Record resistance. • Resistance should be between 20-30 ohms. 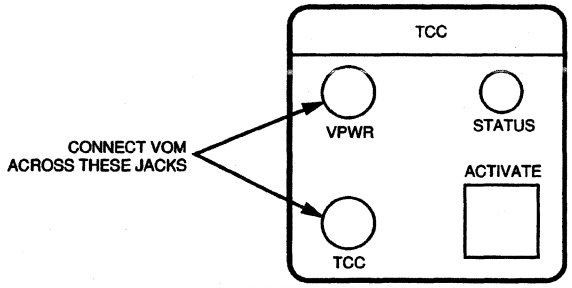 D12546-B • **Is resistance between 20-30 ohms?**	Yes ▶ No ▶	GO to **C8**. REPLACE solenoid body assembly.
C8	CHECK SOLENOID FOR SHORT TO GROUND		
	• Check for continuity between engine ground (BAT-) and appropriate jack with a volt-ohmmeter or other low current tester (less than 200 milliamps). • Connection should show infinite resistance (no continuity). 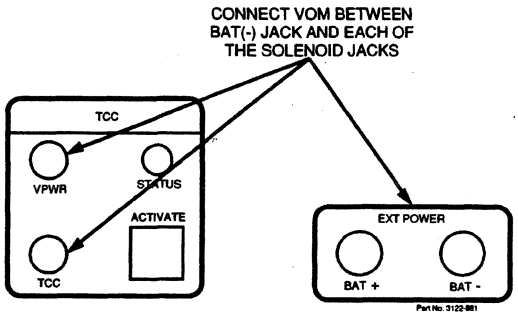 D12547-B • **Does connection show continuity?**	Yes ▶ No ▶	REPLACE solenoid body assembly. REFER to Diagnosis by Symptom Index for torque converter clutch operation concerns.

Official Licensed Product

DIAGNOSIS AND TESTING (Continued)

TR Tester Instructions, Rotunda TR/MLP Tester

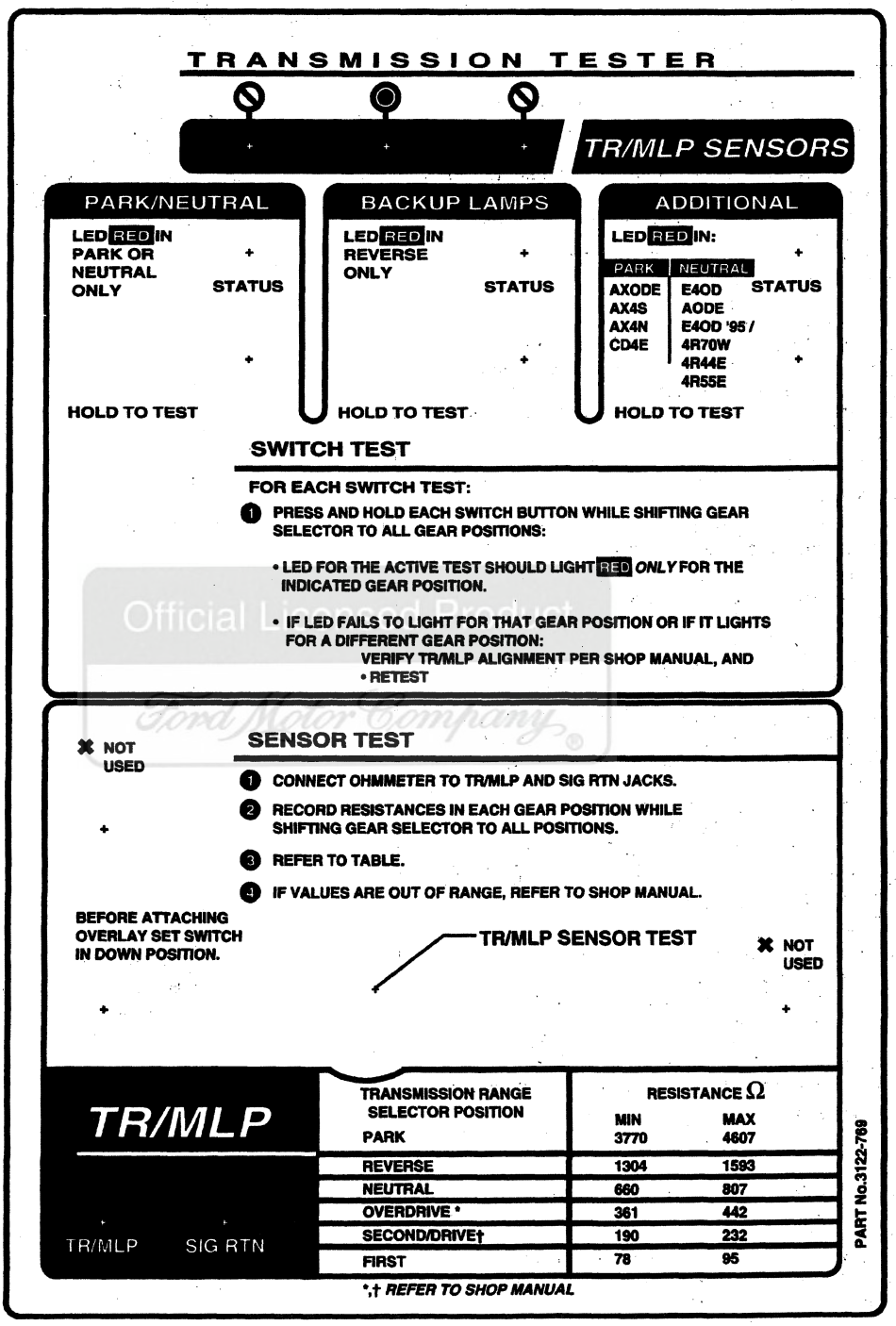

DIAGNOSIS AND TESTING (Continued)

PINPOINT TEST D: TRANSMISSION RANGE (TR) SENSOR

Test Step		Result ▶	Action to Take
D1	ELECTRONIC DIAGNOSTICS		
	NOTE: Additional codes may also be set by running Quick Tests with the transmission not in PARK or with the A/C on. Make sure Quick Tests are performed properly. • Make sure Transmission Range (TR) sensor harness connector is fully seated, terminals are fully engaged in connector and in good condition before proceeding. • Verify shift linkage adjustment in DRIVE. • Turn ignition switch off. • Apply parking brake. • Place transmission in NEUTRAL. • Verify that Transmission Range (TR) Sensor Alignment Tool T92P-70010-AH (MLPS Alignment Tool) fits in the appropriate slots. • **Is the Transmission Range (TR) sensor properly adjusted?**	Yes ▶ No ▶	REMOVE tool. GO to **D2**. ADJUST sensor as described under Assembly in this section. After adjustments, PLACE transmission range selector lever in PARK. CLEAR DTCs and REPEAT Quick Tests.
D2	CHECK ELECTRICAL SIGNAL OPERATION		
	• Turn ignition switch off. **CAUTION: Do not pry on connector. Squeeze tabs and pull up on vehicle harness connector.** • Disconnect transmission connector. • Using a mirror, inspect both ends of the connector for damaged or pushed-out pins, corrosion, loose wires and missing or damaged seals. NOTE: Refer to Transmission Vehicle Harness Connectors preceding Pinpoint Test A. • Connect a volt-ohmmeter positive test lead to TR sensor signal circuit and negative test lead to Signal Return (SIG RTN) circuit of transmission harness connector. • Place volt-ohmmeter on 20-volt scale. • Turn key on, engine off (KOEO). • **Is voltage between 4.75 and 5.25 volts?**	Yes ▶ No ▶	GO to **D5**. GO to **D3**.
D3	CHECK CONTINUITY OF TRANSMISSION RANGE (TR) SENSOR HARNESS CIRCUITS		
	• Turn ignition switch off. • Make sure TR sensor is disconnected. • Disconnect powertrain control module. — Inspect for damaged or pushed-out pins, corrosion, or loose wires. • Install Rotunda EEC-IV 60-Pin Breakout Box 014-00322, or EEC-V 104-Pin Breakout Box 014-00950 or equivalent. Leave PCM disconnected. NOTE: Refer to Transmission Vehicle Harness Connectors preceding Pinpoint Test A. EEC-IV • Measure resistance between test Pin 46 at Breakout Box and signal return circuit at TR sensor harness connector. • Measure resistance between test Pin 30 at Breakout Box and TR sensor signal circuit at TR sensor harness connector. EEC-V • Measure resistance between test Pin 91 at Breakout Box and SIG RTN circuit at TR sensor vehicle harness connector. • Measure resistance between test Pin 64 at Breakout Box and TR sensor signal circuit at TR sensor harness connector. • **Is each resistance less than 5.0 ohms?**	Yes ▶ No ▶	GO to **D4**. SERVICE open circuit(s). REMOVE Breakout Box. RECONNECT all components. ERASE codes. REPEAT Quick Tests.

DIAGNOSIS AND TESTING (Continued)

PINPOINT TEST D: TRANSMISSION RANGE (TR) SENSOR (Continued)

Test Step		Result ▶	Action to Take
D4	CHECK TRANSMISSION RANGE (TR) SENSOR CIRCUIT FOR SHORTS TO POWER AND GROUND		
	• Make sure Rotunda Breakout Box is installed and PCM is disconnected. • Make sure TR sensor harness connector is disconnected. NOTE: Refer to Transmission Vehicle Harness Connectors preceding Pinpoint Test A. EEC-IV • Measure resistance between test Pin 30 and test Pins 37/57, 40/60, and 46 at Breakout Box. • Measure resistance between test Pin 30 at Breakout Box and chassis ground. EEC-V • Measure resistance between test Pin 64 and test Pins 71, 97, 51, 76, 77, 103 and 91. • Measure resistance between test Pin 64 at Breakout Box and chassis ground. • **Is each resistance greater than 10,000 ohms?**	Yes ▶ No ▶	GO to **D5**. SERVICE short circuit. REMOVE Breakout Box. RECONNECT all components. ERASE codes. REPEAT Quick Tests.
D5	CHECK TRANSMISSION RANGE SENSOR RESISTANCE		
	• Make sure TR sensor harness connector is disconnected. • Connect Rotunda Transmission Range (TR) Sensor Cable "B" ("MLPS" Manual Lever Position Sensor Cable) 007-00127 or equivalent to sensor and tester. • Install appropriate overlay onto tester. • Using procedure provided with tester, verify sensor resistive functions in all positions.	Yes ▶ No ▶	If sent here directly from Step D2, GO to Step **D6**. If sent here from Step D4, REPLACE PCM, then GO to **D6**. REPLACE TR sensor. ADJUST sensor as described under Assembly in this section. ERASE codes and REPEAT Quick Tests.

Transmission Range Selector Lever Position	Resistance (Ohms) Min.	Resistance (Ohms) Max.	Range Volts
P	3770	4607	3.97-4.85
R	1304	1593	3.24-3.96
N	660	807	2.55-3.11
D	361	442	1.88-2.30
2	190	232	1.23-1.51
1	78	95	0.61-0.75

• **Is resistance within the specified range?**

DIAGNOSIS AND TESTING (Continued)

PINPOINT TEST D: TRANSMISSION RANGE (TR) SENSOR (Continued)

Test Step		Result ▶	Action to Take
D6	CHECK PARK/NEUTRAL CIRCUITS OF SENSOR		
• Using the procedures outlined in the tester manual, check the Park/Neutral circuits of the sensor in all gear positions. • Monitor the Status Lamp on the tester for proper indications. **COMPONENT TESTING PROCEDURE** (see table below) • **Do the Park/Neutral circuits operate properly, and only in the proper gear position?**		Yes ▶ No ▶	GO to **D7**. If diagnosing a Park/Neutral circuit or starting concern, REFER to Section 03-06A or to Section 03-06B. REPLACE TR sensor. ADJUST sensor as described under Assembly in this section. ERASE DTCs and RERUN Quick Tests.
D7	CHECK REVERSE/BACKUP LAMP CIRCUITS OF SENSOR		
• Using the procedures outlined in the tester manual, check the Reverse/Backup circuits of the sensor in all gear positions. • Monitor the Status Lamp on the tester for proper indications. **COMPONENT TESTING PROCEDURE** (see table below) • **Do the Reverse/Backup Circuits operate properly, and only in the proper gear position?**		Yes ▶ No ▶	If diagnosing a Reverse/Backup circuit concern, REFER to Section 17-01. REPLACE TR sensor. ADJUST sensor as described under Assembly in this section. ERASE DTCs and RERUN Quick Tests.

To Test	Ohmmeter to Terminals	Move Range Selector Lever to These Positions	A Good Sensor Will Indicate
Starter Relay Circuit	33 (W/PK) and 32 (R/LB)	Park	Less than 5 ohms
		Reverse	Greater than 100 k ohms
		Neutral	Less than 5 ohms
		(D)	Greater than 100 k ohms
		Second (2)	Greater than 100 k ohms
		First (1)	Greater than 100 k ohms

To Test	Ohmmeter to Terminals	Move Range Selector Lever to These Positions	A Good Sensor Will Indicate
Backup Lamp Circuit	298 (BK) and 140 (BK/PK)	Park	Greater than 100 k ohms
		Reverse	Less than 5.0 ohms
		Neutral	Greater than 100 k ohms
		(D)	Greater than 100 k ohms
		Second (2)	Greater than 100 k ohms
		First (1)	Greater than 100 k ohms

Licensed Product

DIAGNOSIS AND TESTING (Continued)

PINPOINT TEST E: ELECTRONIC PRESSURE CONTROL (EPC) SOLENOID

Test Step		Result ▶	Action to Take
E1	E4OD ELECTRONIC DIAGNOSTICS		
	• Make sure the transmission harness connector is fully seated, terminals are fully engaged in connector and in good condition before proceeding. • Connect Rotunda New Generation Star (NGS) Tester 007-00500 or equivalent. • Perform KOEO test until continuous DTCs have been displayed. • Enter Output Test Mode (OTM). Refer to Special Test Modes in this section. • Select ALL ON Mode. Press START to turn outputs ON. Press STOP to turn outputs OFF. • **Does vehicle enter OTM?**	Yes ▶ No ▶	REMAIN in OTM. GO to **E2**. PRESS START. If vehicle does not enter OTM, REFER to 1996 PC/ED Manual Output Test Mode Not Functioning, Pinpoint Test MB.
E2	CHECK ELECTRICAL SIGNAL OPERATION		
	CAUTION: Remove heat shield from transmission before removing connector. Remove solenoid body connector by pushing on center tab and pulling on harness connector. Do not attempt to pry tab with a screwdriver. Reinstall heat shield when procedure is completed. • Disconnect transmission connector. • Using a mirror, inspect both ends of connector for damaged or pushed-out pins, corrosion, loose wires, and missing or damaged seals. NOTE: Refer to Transmission Vehicle Harness Connectors preceding Pinpoint Test A. • Connect a volt-ohmmeter positive lead to EPC PWR circuit and negative test lead to EPC signal circuit of transmission vehicle harness connector. • Place volt-ohmmeter on 20-volt scale. • While observing volt-ohmmeter, press start and stop to cycle solenoid output On and Off. • **Is the solenoid output voltage changed to approximately battery voltage?**	Yes ▶ No ▶	GO to **E5**. GO to **E3**.
E3	CHECK CONTINUITY OF SOLENOID SIGNAL AND VEHICLE POWER (VPWR) HARNESS CIRCUITS		
	• Turn ignition switch off. • Disconnect powertrain control module. Inspect for damaged or pushed-out pins, corrosion, or loose wires. • Install Rotunda EEC-IV 60-Pin Breakout Box 014-00322, or EEC-V 104-Pin Breakout Box 014-00950 or equivalent. Leave PCM disconnected. NOTE: Refer to Transmission Vehicle Harness Connectors preceding Pinpoint Test A. • Measure resistance between appropriate power test pins at Breakout Box and electronic pressure control power circuit at transmission harness connector. • Measure resistance between appropriate PCM signal test pin at Breakout Box and electronic pressure control signal pin at transmission connector. • **Is each resistance less than 5.0 ohms?**	Yes ▶ No ▶	GO to **E4**. SERVICE open circuit. REMOVE Breakout Box. RECONNECT all components. ERASE codes and REPEAT Quick Tests.

Ford Motor Company

DIAGNOSIS AND TESTING (Continued)

PINPOINT TEST E: ELECTRONIC PRESSURE CONTROL (EPC) SOLENOID (Continued)

Test Step		Result	Action to Take
E4	CHECK HARNESS FOR SHORT TO POWER OR GROUND		
	• Make sure Breakout Box is installed and PCM is disconnected. • Make sure transmission connector is disconnected. NOTE: Refer to Transmission Vehicle Harness Connectors preceding Pinpoint Test A. • Measure resistance between appropriate electronic pressure control signal circuit test pin and power test pins at the Breakout Box. • Measure resistance between appropriate electronic pressure control signal circuit test pin and ground test pins at the Breakout Box. • **Is each resistance greater than 10,000 ohms?**	Yes ▶ No ▶	GO to **E5**. SERVICE short circuit. REMOVE Breakout Box. RECONNECT all components. REPEAT Quick Tests.
E5	TRANSMISSION FUNCTIONAL TEST		
	• Make sure the transmission harness connector is disconnected. • Install line pressure gauge at line tap on case. • Install Rotunda Transmission Tester 007-000130 and E4OD (95/) Cable and Overlay 007-00107 or equivalents. • Set Bench/Drive switch to DRIVE mode. • Rotate gear selector switch to 1st gear position. • Perform EPC Solenoid Functional Test under Dynamic Testing — Engine On. • Does electronic pressure control (LED GREEN) activate when electronic pressure control switch is pressed? • Observe line pressure on gauge while pressing electronic pressure control switch. NOTE: Vehicle must be running. • **Does the line pressure drop?**	Yes ▶ No ▶	REPLACE powertrain control module. REPEAT Quick Tests. GO to **E6**.
E6	CHECK RESISTANCE OF SOLENOID		
	CAUTION: Make sure that tester power is OFF or damage to volt-ohmmeter may result. • Connect volt-ohmmeter negative lead to vehicle power (VPWR) jack and positive lead to electronic pressure control (EPC) jack on tester. — This is to test electronic pressure control solenoid. • Record resistance. 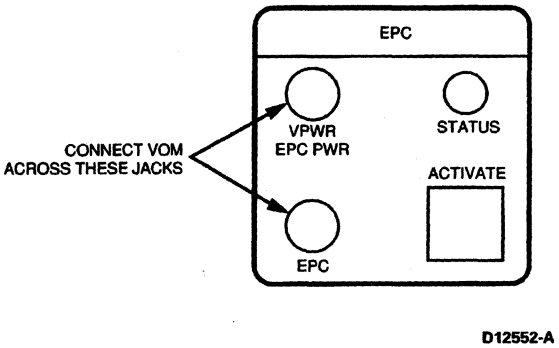 D12552-A • **Is the resistance between 3.0-5.0 ohms?**	Yes ▶ No ▶	GO to **E7**. REPLACE solenoid body assembly. RECORD and ERASE codes. REPEAT Quick Tests.

Official Licensed Product
Ford Motor Company

DIAGNOSIS AND TESTING (Continued)

PINPOINT TEST E: ELECTRONIC PRESSURE CONTROL (EPC) SOLENOID (Continued)

Test Step		Result ▶	Action to Take
E7	CHECK SOLENOID FOR SHORT TO GROUND		
	• Check for continuity between engine ground (BAT-) and appropriate jack with a volt-ohmmeter or other low current tester (less than 200 milliamps).	Yes ▶	REPLACE solenoid body assembly. RECORD and ERASE codes. REPEAT Quick Tests.
		No ▶	GO to Diagnosis by Symptom Index for diagnosis of electronic pressure control concerns.

Solenoid	Tester Jack
Electronic Pressure Control	Electronic Pressure Control (EPC) Vehicle Power (VPWR)

• Connection should show infinite resistance (no continuity).

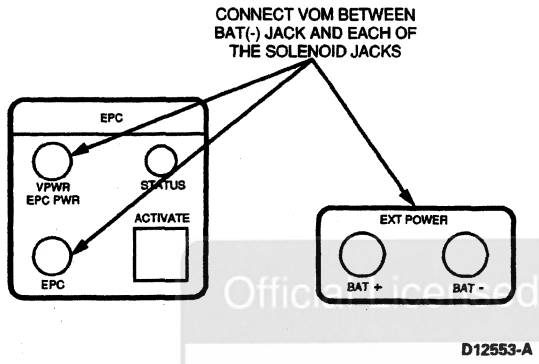

• **Does connection show continuity?**

Official Licensed Product Chrysler Corporation

PINPOINT TEST G: COAST CLUTCH SOLENOID (CCS)

Test Step		Result ▶	Action to Take
G1	E4OD ELECTRONICS DIAGNOSTICS		
	• Make sure transmission harness connector is fully seated, terminals are fully engaged in connector and in good condition before proceeding. • Connect Rotunda New Generation Star (NGS) Tester 007-00500 or equivalent. • Perform KOEO test until continuous DTCs have been displayed. • Enter Output Test Mode (OTM). Refer to Special Test Modes in this section. • Select ALL ON Mode. Press START to turn outputs ON. Press STOP to turn outputs OFF. • **Does vehicle enter OTM?**	Yes ▶	REMAIN in OTM. GO to **G2**.
		No ▶	PRESS START. If vehicle does not enter OTM, REFER to 1996 PC/ED Manual Ouptut Test Mode Not Functioning, Pinpoint Test MB.

DIAGNOSIS AND TESTING (Continued)

PINPOINT TEST G: COAST CLUTCH SOLENOID (CCS) (Continued)

Test Step		Result ▶	Action to Take
G2	CHECK ELECTRICAL SIGNAL OPERATION		
	CAUTION: Remove heat shield from transmission before removing connector. Remove solenoid body connector by pushing on center tab and pulling on harness connector. Do not attempt to pry tab with a screwdriver. Reinstall heat shield when procedure is completed. ● Disconnect transmission connector. ● Using a mirror, inspect both ends of connector for damaged or pushed-out pins, corrosion, loose wires, and missing or damaged seals. NOTE: Refer to Transmission Vehicle Harness Connectors preceding Pinpoint Test A. ● Connect volt-ohmmeter positive test lead to vehicle power (VPWR) circuit and negative test lead to solenoid signal circuit of transmission vehicle harness connector. ● Place volt-ohmmeter on 20-volt scale. ● While observing volt-ohmmeter, press start and stop to cycle solenoid output on and off. ● **Is the solenoid output voltage changed to approximately battery voltage?**	Yes ▶ No ▶	GO to **G5**. GO to **G3**.
G3	CHECK CONTINUITY OF SOLENOID SIGNAL AND VEHICLE POWER HARNESS CIRCUITS		
	● Turn ignition switch off. ● Make sure transmission harness connector is disconnected. ● Disconnect powertrain control module. Inspect for damaged or pushed-out pins, corrosion or loose wires. ● Install Rotunda EEC-IV 60-Pin Breakout Box 014-00322, or EEC-V 104-Pin Breakout Box 014-00950 or equivalent. Leave PCM disconnected. NOTE: Refer to Transmission Vehicle Harness Connectors preceding Pinpoint Test A. ● Measure resistance between appropriate PCM signal test pin at Breakout Box and signal pin at transmission harness connector. ● Measure resistance between appropriate VPWR test pins at Breakout Box and VPWR pin at transmission harness connector. ● **Is each resistance less than 5.0 ohms?**	Yes ▶ No ▶	GO to **G4**. SERVICE open circuit(s). REMOVE Breakout Box. RECONNECT all components. REPEAT Quick Tests.
G4	CHECK SOLENOID HARNESS FOR SHORTS TO POWER AND GROUND		
	● Make sure Breakout Box is installed and PCM is disconnected. NOTE: Refer to Transmission Vehicle Harness Connectors preceding Pinpoint Test A. ● Measure resistance between appropriate PCM signal test pin and VPWR test pins at the Breakout Box. ● Measure resistance between appropriate PCM signal test pin and ground test pins at Breakout Box and chassis ground. ● **Is each resistance greater than 10,000 ohms?**	Yes ▶ No ▶	GO to **G5**. SERVICE short circuit. REMOVE Breakout Box. RECONNECT all components. REPEAT Quick Tests.

Official Licensed Product Motorcraft Company

DIAGNOSIS AND TESTING (Continued)

PINPOINT TEST G: COAST CLUTCH SOLENOID (CCS) (Continued)

Test Step		Result ▶	Action to Take
G5	SOLENOID FUNCTIONAL TEST		
	• Reconnect PCM. • Make sure that the vehicle harness is disconnected at the transmission connector. • Install Rotunda Transmission Tester 007-000130 and E4OD (95/) Cable and Overlay 017-00107 or equivalents. • NOTE: LED will turn GREEN when solenoid activates and turn OFF when deactivated. LED will turn RED if activated solenoid is shorted to B+. LED will remain OFF if an activated solenoid is shorted to ground or no continuity. • Perform the Solenoid Voltage Test under Static Testing — Engine Off. • **Does solenoid activate (LED green)?**	Yes ▶ No ▶	GO to **G6**. GO to **G7**.
G6	TRANSMISSION DRIVE TEST		
	• Perform Dynamic Testing — Engine On procedures as outlined in this section. • **Does coast clutch solenoid activate (LED GREEN) and engine braking occur?**	Yes ▶ No ▶	REPLACE PCM. ERASE all codes and PERFORM Transmission Drive Cycle Test in this section. REPEAT Quick Tests. GO to **G7**.
G7	CHECK RESISTANCE OF SOLENOID		
	• Set bench/drive switch to BENCH mode. • Rotate gear select switch to OHMS. CHECK position. • Connect a volt-ohmmeter negative lead to coast clutch solenoid jack and positive lead to vehicle power (VPWR) jack on tester. • Record resistance. • Resistance should be between 20-30 ohms. 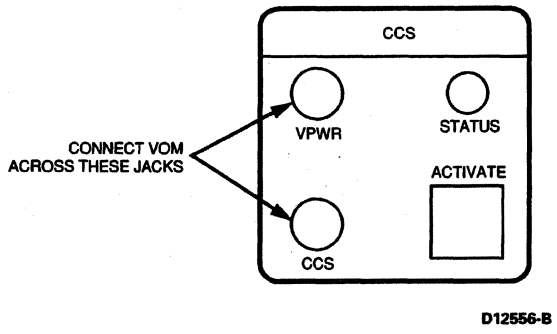 D12556-B • **Is resistance between 20-30 ohms?**	Yes ▶ No ▶	GO to **G8**. REPLACE solenoid body assembly.

Official Licensed Product Ford Motor Company

DIAGNOSIS AND TESTING (Continued)

PINPOINT TEST G: COAST CLUTCH SOLENOID (CCS) (Continued)

Test Step		Result ▶	Action to Take
G8	CHECK SOLENOID FOR SHORT TO GROUND		
	• Check for continuity between engine ground (BAT-) and appropriate jack with or other low current tester (less than 200 milliamps).	Yes ▶	REPLACE solenoid body assembly.
		No ▶	GO to Diagnosis by Symptom section for coast clutch concerns.

Solenoid	Tester Jack
Coast Clutch Solenoid	Coast Clutch Solenoid (CCS)

• Connection should show infinite resistance (no continuity).

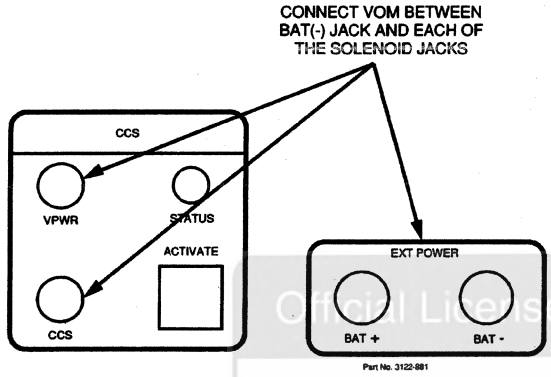

D12557-B

• **Does connection show continuity?**

Official Licensed Product Ford Motor Company

Special Testing Procedures

Engine Idle Speed Check

CAUTION: Engine idle speed concerns must be repaired prior to performing line pressure and stall speed test procedures.

Refer to the 1997 Powertrain Control / Emissions Diagnosis Manual[12] for 7.3L DI Diesel Engine and to 1996 PC / ED[12] for all other engines.

Line Pressure Test

CAUTION: Perform the line pressure test prior to performing the stall speed test. If line pressure is low at stall, do not perform the stall speed test or further transmission damage will occur. DO NOT MAINTAIN WIDE-OPEN THROTTLE in any gear range FOR MORE THAN 5 SECONDS.

CAUTION: Transmission tester must be removed from the transmission and the vehicle harness reinstalled to verify test pressures.

This test verifies the line pressure is within specifications.

1. Connect Pressure Gauge T57L-77820-A to the line pressure tap.

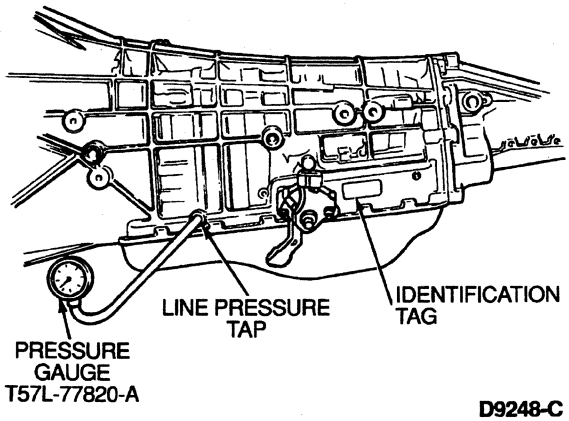

D9248-C

2. Start the engine and check the line pressures. Refer to the following Pressure Chart No. 401 to determine if the line pressure is within specification.
3. If the line pressure is not within specifications, perform On-Board Diagnostics and Pinpoint Test E, air pressure check, clean and inspect and replace the main control system or pump as required.

12 Can be purchased as a separate item.

DIAGNOSIS AND TESTING (Continued)

PRESSURE CHART NO 401

Gear	Line Pressure — Idle		Line Pressure — Stall	
	kPa	psi	kPa	psi
P,N	379 448	50 65	—	—
R	483 690	70 100	1689 2000	245 290
D,2	345 448	50 65	1138 1276	165 185
1	483-690	70 100	1207 1448	175 210

LINE PRESSURE DIAGNOSIS CHART

Low at Idle in All Ranges	High at Idle in All Ranges
Check for low fluid level, restricted inlet filter loose main body solenoid body or accumulator body to case bolts, excessive leakage in pump case, control bodies, sticking main regulator valve damaged filter assembly and seal, damaged gaskets or valve body separating plate	Check the main regulator valve, solenoid body and wiring harness Run the Quick Tests referred to in the Diagnostics portion of this section

Low Only in					
P	R	N	D	2	1
Check valve bodies 7A100	Check separator reinforcing plate, coast clutch, low/reverse clutch or direct clutch, valve bodies 7A100, 7G422	Check valve bodies 7A100	Check forward clutch valve bodies 7A100	Check forward clutch, coast clutch or intermediate brake band servo assy, valve bodies 7A100 7G422	Check forward clutch low/reverse clutch or coast clutch valve bodies 7A100

Official Licensed Product
Ford Motor Company

Stall Speed Test

WARNING APPLY THE SERVICE AND PARKING BRAKES FIRMLY WHILE PERFORMING EACH STALL TEST

CAUTION Perform the line pressure test prior to performing the stall test If line pressure is low at stall, do not perform the stall test or further transmission damage will occur

NOTE The stall test should only be performed with the engine and transmission (7003) at normal operating temperatures

The stall test checks the operation of the following items

- torque converter one-way clutch
- forward clutch
- low one-way clutch
- reverse clutch
- overdrive one-way clutch
- direct clutch
- engine performance

1 Connect a tachometer to the engine

2 After testing each of the following ranges, D, 2, 1 and R, move the transmission range selector lever to N (NEUTRAL) and run the engine for about 15 seconds to allow the torque converter (7902) to cool before testing the next range

3 **CAUTION If the engine rpm recorded by the tachometer exceeds the maximum specified rpm, release the accelerator pedal immediately Clutch or band slippage is indicated**

CAUTION. Do not maintain wide-open throttle (WOT) in any gear range for more than 5 seconds

Press the accelerator pedal to floor (WOT) in each range Record the rpm reached in each range Stall speeds should be in the appropriate range

STALL SPEED CHART

Series	Engine	Min	Max
F 250, F 350, F-Super Duty	5 8L	2256	2712
F 250 F 350, F-Super Duty	7 3L DI Diesel	1951	2288
F 250, F 350, F Super Duty	7 5L	1972	2350

DIAGNOSIS AND TESTING (Continued)

If the stall speeds were too high, refer to the following Stall Speed Diagnosis Chart. If the stall speeds were too low, check engine tune-up. If the engine is OK, remove the torque converter and check the torque converter reactor one-way clutch for slippage.

STALL SPEED DIAGNOSIS CHART

Range	Possible Source
D	• Forward Clutch • Overdrive One-Way Clutch • Low One-Way Clutch
R	• Direct Clutch • Overdrive One-Way Clutch and Coast Clutch • Reverse Clutch
2	• Forward Clutch • Overdrive One-Way Clutch and Coast Clutch
1	• Forward Clutch • Reverse Clutch and Low One-Way Clutch • Coast Clutch and Overdrive One-Way Clutch

Air Pressure Tests

A no-drive condition can exist, even with correct transmission fluid pressure, because of inoperative clutches or bands. Refer to the Band / Clutch Application Chart No. 601 following the Test Procedures below, to determine the appropriate elements. A clutch concern can be located through a series of checks by substituting air pressure for fluid pressure to determine the location of the concern.

Example: When the transmission range selector lever is in a forward gear range (D, 2, 1), a no-drive condition may be caused by an inoperative forward clutch.

Test Procedures

1. Drain the transmission fluid. Remove the transmission fluid pan (7A194).
2. Remove the filter assembly and seal, the solenoid body and the control assemblies.
3. The inoperative clutches can be located by applying air pressure into the appropriate clutch port. See the following Air Pressure Test Port Locations diagram for clutch port locations.
4. Apply air pressure to the appropriate clutch port (see diagram). A dull thud may be heard or movement felt when a clutch piston is applied. If the clutch seals or check ball are leaking, a hissing may be heard.

Official Licensed Product
Ford Motor Company

Air Pressure Test Port Locations

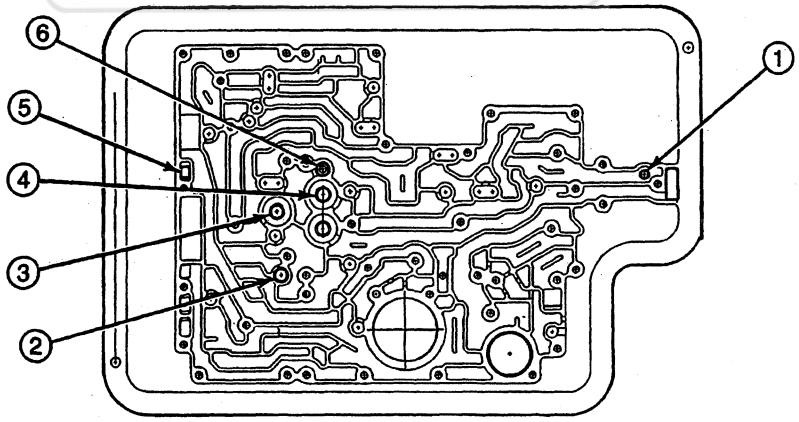

DD0751-A

Item	Description
1	Reverse Clutch Feed
2	Intermediate Clutch Feed
3	Overdrive Clutch Feed

(Continued)

Item	Description
4	Forward Clutch Feed
5	Coast Clutch Feed
6	Direct Clutch Feed

DIAGNOSIS AND TESTING (Continued)

BAND/CLUTCH APPLICATION CHART NO. 601

Gear	Friction Elements							One-Way Clutches					
								Overdrive		Intermediate		Low	
	Intermediate Band	Coast	Overdrive	Intermediate	Direct	Forward	Reverse	Drive	Coast	Drive	Coast	Drive	Coast
(D) first	—	[ab]	—	—	—	apply	—	HOLD	[ab]	—	—	HOLD	O/R
(D) second	—	[ab]	—	apply	—	apply	—	HOLD	[ab]	HOLD	O/R	O/R	O/R
(D) third	—	[ab]	—	apply	apply	apply	—	HOLD	[ab]	O/R	O/R	O/R	O/R
(D) fourth	—	—	apply	apply	apply	apply	—	O/R	O/R	O/R	O/R	O/R	O/R
1	—	apply	—	—	—	apply	apply	HOLD	CC	—	—	HOLD	—
2	apply	apply	—	apply	—	apply	—	HOLD	CC	HOLD	BA	O/R	O/R
reverse	—	apply	—	—	apply	—	apply	HOLD	CC	O/R	O/R	—	—

a In (D) range with the transmission control switch pressed, the coast clutch is applied and the O/D one-way clutch is bypassed.
b On certain applications in O/D range, the coast clutch solenoid and clutch are controlled by the PCM.

O/D — Overdrive
O/R — Overrunning
CC — Coast Friction Clutch Applied
BA — Band Applied

Official Licensed Product
Ford Motor Company

Test Results

If the servos do not operate, disassemble, clean and inspect them to locate the source of the concern.

If air pressure applied to the clutch passages fails to operate a clutch, or operates clutches simultaneously, inspect the fluid passages in the case (7005).

If air pressure applied to the accumulator fails to operate an accumulator, remove and inspect the case passages and piston.

Torque Converter Drainback Test

1. Drive the vehicle for 30-60 minutes to attain normal operating temperature.
2. Check the transmission fluid level. Add fluid only if required.
3. Drive the vehicle through 8 to 10 cycles of 1/2 throttle, 1-2 upshifts to elevate the transmission temperature. Then proceed as follows:
   - Park the vehicle on level ground.
   - Allow the vehicle to sit for 30-60 minutes.
   - Check and note the fluid level on the fluid level indicator (7A020) with the engine off, in PARK.
4. Allow the vehicle to sit for a minimum of 24 hours. Check and note the fluid level.
5. Subtract the reading taken in Step 3 from the reading taken in Step 4. Example: 38.1 mm - 6.35 mm = 31.75 mm (1.5 in. - 0.25 in. = 1.25 in.). If the fluid has risen 25.4 mm (1 inch) or more above the level in the first check, excessive converter drainback has occurred.
6. If excessive converter drainback has occurred, replace the drainback check valve at the rear case fitting and repeat the test.

NOTE: STYLE OF TRANSMISSION FLUID LEVEL INDICATOR IS MODEL-DEPENDENT

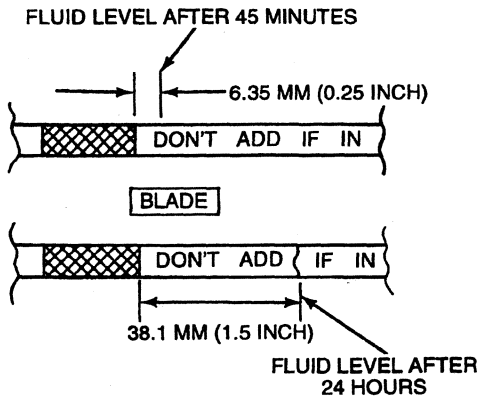

38.1 MM-6.35 MM= 31.75 MM
(1.5 INCH-0.25 INCH = 1.25 INCH)

DD0619-B

DIAGNOSIS AND TESTING (Continued)

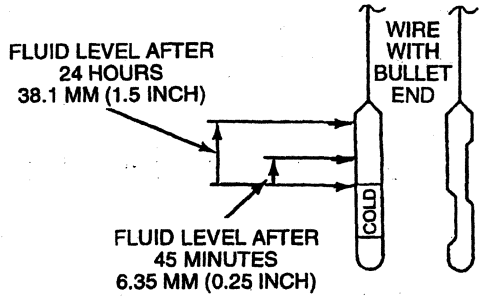

NOTE: STYLE OF TRANSMISSION FLUID LEVEL INDICATOR IS MODEL-DEPENDENT DD0620-B

Leakage Inspection

External Sealing

The E4OD transmission has the following parts to prevent external fluid leakage:

- gaskets
- lip-type seals
- O-ring seals
- seal rings
- seal grommets
- thread sealant

External Sealing — E4OD

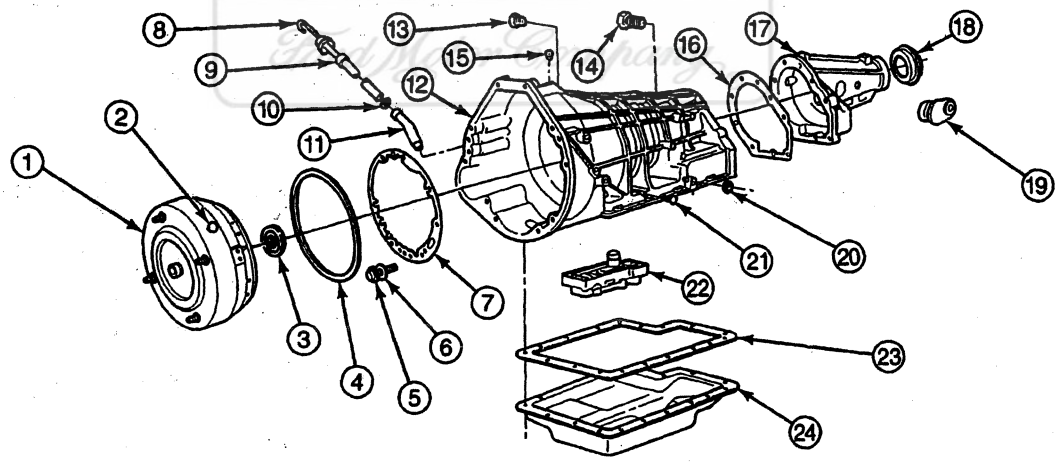

DD0752-A

Item	Part Number	Description
1	7902	Converter Assy
2	87650-S2	Converter Drain Plug
3	7A248	Front Pump Seal
4	7A248	Front Pump Square-Cut O.D. Seal
5	N805260-S	Bolt and Washer Assy
6	7G379	Washer
7	7A136	Pump Gasket
8	7A020	Fluid Level Indicator
9	7A228	Fluid Filler Tube Assy
10	391308-S	Filler Tube O-Ring

(Continued)

Item	Part Number	Description
11	7A160	Short Fluid Inlet Tube Assy
12	7005	Case
13	7D273	Fluid Tube Inlet Connector
14	7D174	Converter Drainback Check Valve Assy — Rear
15	7034	Case Vent Assy
16	7086	Extension Housing Gasket
17	7A039	Extension Housing
18	7052	Extension Housing Seal
19	7H183	Extension Housing Plug Assy
20	7B498	Manual Control Lever Seal

(Continued)

DIAGNOSIS AND TESTING (Continued)

Item	Part Number	Description
21	390685-S	Plug — Test Port — 1/8-27 Hex Head
22	7G391	Solenoid Valve Body Assy

(Continued)

Item	Part Number	Description
23	7A191	Reusable Transmission Pan Gasket
24	7A194	Transmission Fluid Pan

Leakage at the transmission pan-to-case gasket often can be stopped by tightening the retaining bolts to specification. Refer to the Specifications portion of this section. Clean, inspect and reuse gasket unless damaged.

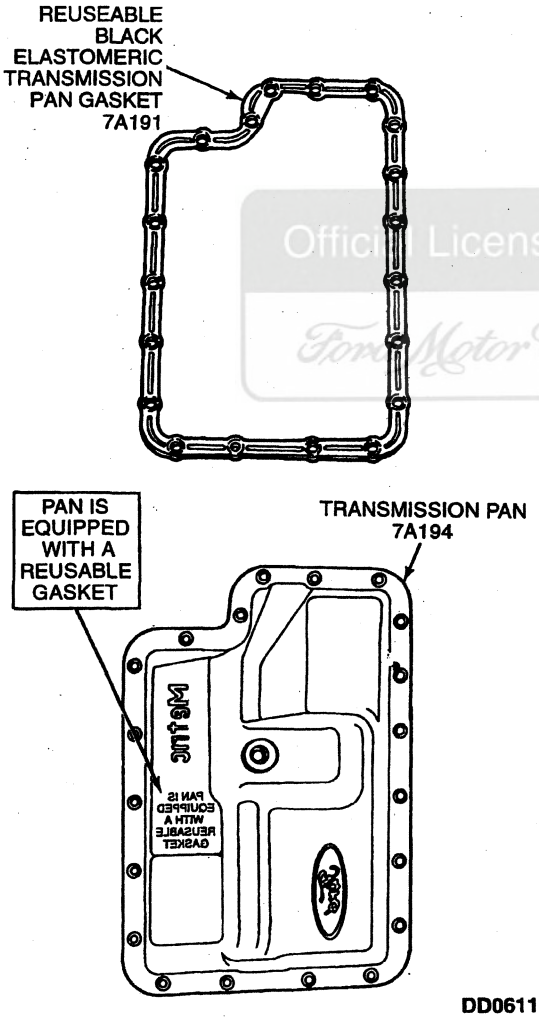

If leakage is found by the solenoid body connector, refer to Main Control Valve Body in the In-Vehicle Service portion of this section. Replace the O-ring on the connector snout of the solenoid body assembly.

Check the transmission fluid filler tube connection at the transmission case (7005). If leakage is found, install a new short fluid inlet tube.

Check the transmission fluid lines and fittings between the transmission (7003) and the fluid inlet short tube in the radiator tank for looseness, wear or damage. If leakage cannot be stopped by tightening a fluid line tube nut, replace the damaged parts. When fluid is found to be leaking between the case and the cooler line fitting, tighten the fitting to maximum specification. Refer to Section 07-02.

CAUTION: Do not try to stop the fluid leak by increasing the torque beyond specification. This can cause damage to the case threads.

If the leak continues, replace the cooler line fitting and tighten to specification. The same procedure should be followed for fluid leaks between the radiator cooler and cooler line fittings.

Check the engine coolant in the radiator (8005). If transmission fluid is present in the coolant, the transmission fluid cooler in the radiator is probably leaking.

The transmission fluid cooler can be further checked for leaks by disconnecting the lines from the cooler fittings and applying no more than 345 kPa (50 psi) air pressure to the fittings. Remove the radiator cap (8100) to relieve the pressure buildup at the exterior of the fluid cooler tank. If the transmission fluid cooler is leaking, will not hold pressure, or both, replace the transmission fluid cooler.

If leakage is found at the manual control lever shaft, replace the seal.

When a converter drain plug leaks, remove the drain plug. Install and tighten a new drain plug to specification. Refer to the Specifications portion of this section.

Check for fluid leaking from the end of the extension housing (7A039). Leakage can result from a damaged seal, missing garter spring, worn extension bushing or damaged speedometer plug. Replace the seal assembly, bushing, or both, as necessary.

Inspect the line pressure plugs for leakage. Make sure they are tightened to specification. Refer to the Specifications portion of this section. If tightening does not stop the leak, replace the plug.

Official Licensed Product
Ford Motor Company

DIAGNOSIS AND TESTING (Continued)

Fluid Leakage in Torque Converter Area

In diagnosing and correcting fluid leaks in the torque converter (7902) area, use the following procedures to locate the exact cause of the leakage. Leakage at the front of the transmission, evidenced by fluid around the converter housing, can have several sources. By careful observation it is possible, in many instances, to pinpoint the source of the leak before removing the transmission from the vehicle. The paths that the fluid can take to reach the bottom of the converter housing are as shown in the following illustration. The following five steps correspond with the numbers in the following illustration.

Torque Converter Area Leak Points

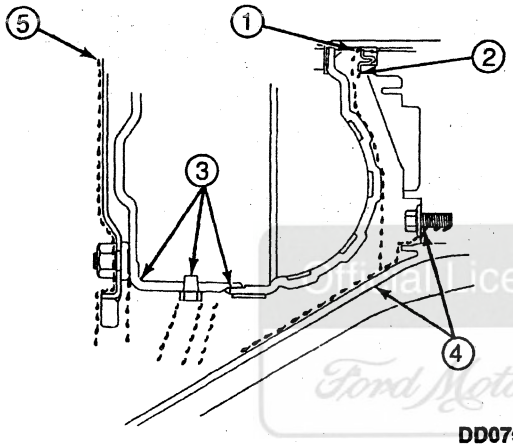

DD0753-A

1. Fluid leaking by the torque converter impeller hub seal lip will tend to move along the converter impeller hub and onto the back of the impeller housing. Except in the case of a total seal failure, fluid leakage by the lip of the seal will be deposited on the inside of the converter housing only, near the outside diameter of the converter housing.
2. Fluid leakage by the outside diameter of the converter hub seal and the case will follow the same path the leaks by the inside diameter of the seal follow.
3. Fluid leakage from the torque converter to the flywheel stud weld, drain plug or seal weld will appear at the outer diameter of the torque converter on the back face of the flywheel (6375), and in the converter housing only near the flywheel. If a converter leak is suspected, remove torque converter and pressure check. Refer to Torque Converter Checks under Disassembly / Reassembly of Subassemblies in the Disassembly portion of this section.
4. Fluid leakage from the pump will flow down the back of the converter housing. Leakage can be from any or all of the following: loose or missing pump bolts, torn or damaged pump-to-case gasket, front pump square cut seal, worn pump bushing.
5. Engine oil leaks are sometimes improperly diagnosed as transmission pump seal leaks. The following areas of possible leakage should also be checked to determine if engine oil leakage is causing the condition.
   - Leakage at the valve cover may allow engine oil to flow over the converter housing or seep down between the converter housing and block, causing oil to be present in or at the bottom of the converter housing.
   - Oil plug leaks will allow oil to flow down the rear face of the block to the converter housing.
   - Leakage at the crankshaft seal will work back to the flywheel, and then into the converter housing.

Leak Check Test

The following procedures should be used to determine the cause of the leakage before repair is performed.

1. Remove the fluid level indicator (7A020) and note the color of the fluid. Original factory fill fluid is dyed red to aid in determining if leakage is from the engine or transmission. Unless a considerable amount of makeup fluid has been added or the fluid has been changed, the red color should assist in pinpointing the leak.
2. Remove the converter housing cover. Clean off any fluid from the top and bottom of the converter housing, front of the transmission case, and rear face of the engine and pan. Clean the converter area by washing with a suitable non-flammable solvent, and blow dry with compressed air.
3. Wash out the converter housing and the front of the flywheel. The converter housing can be washed out using clean solvent and a squirt-type oil can. Blow-dry all washed areas with compressed air.
4. Start and run the engine until the transmission reaches normal operating temperature. Observe the back of the block and top of the converter housing for evidence of fluid leakage. Raise the vehicle on a hoist and position suitable safety stands under the vehicle. Run the engine at fast idle, then at engine idle, occasionally shifting to the drive and reverse ranges to increase pressure within the transmission. Observe the front of the flywheel, back of the block (as much as possible), and inside the converter housing and front of the transmission case. Run the engine until fluid leakage is evident and the probable source of leakage can be determined.
5. When a converter drain plug leaks, remove the drain plug. Install and tighten a new drain plug to specification. Refer to the Specifications portion of this section.

Ford Motor Company Official Licensed Product

DIAGNOSIS AND TESTING (Continued)

Leak Check Test with Black Light

Oil soluble aniline or fluorescent dyes premixed at the rate of 2.5 ml (1/2 teaspoon) of dye powder to 0.24 L (0.5 pint) of automatic transmission fluid have proven helpful in locating the source of fluid leakage. Such dyes can be used to determine whether an engine fluid or transmission fluid leak is present, or if the fluid in the transmission fluid cooler hose leaks into the engine coolant system. An ultraviolet light must be used to detect the fluorescent dye solution.

Transmission Fluid Cooler

Transmission Fluid Cooler Flow Test

NOTE: The transmission linkage/cable adjustment, fluid level and line pressure must be within specification before performing this test. Refer to Fluid Level Check under Verification of Condition in the Diagnosis and Testing portion of this section. Refer to Line Pressure Test under Special Testing Procedures in the Diagnosis and Testing portion of this section. Refer to Section 07-05 for shift linkage/cable adjustment procedures.

1. Remove the fluid level indicator (7A020) from the fluid filler tube.
2. Place a funnel in the fluid filler tube.
3. Disconnect the fluid cooler inlet (rear) tube from the transmission case fitting. Refer to Section 07-02.
4. Connect one end of a hose to the fluid cooler inlet tube and route the other end of the hose up to a point where it can be inserted into the funnel in the fluid filler tube.
5. **CAUTION: Make sure the hose is secure.**

   Insert the end of the hose into the funnel.
6. Start and run the engine at idle with the transmission (7003) in the neutral range.
7. Watch the fluid flowing from the hose. When the fluid flow is all liquid, remove the hose from the funnel, placing it into a large clean bucket for 30 seconds, and then place the hose back into the funnel.
8. Stop the engine.
9. Remove the hose and reconnect the fluid cooler inlet tube to the transmission case fitting. Tighten fluid cooler tube fitting to 16-24 N·m (12-18 lb-ft).
10. Measure the amount of transmission fluid in the bucket. An adequate flow is approximately 1.0 L (1.057 quarts) delivered in 30 seconds. If adequate flow is observed, the test is complete. Top off the transmission fluid level to the normal operating level and reinstall the fluid level indicator.
11. If the flow is not adequate, disconnect the fluid cooler outlet (front) tube from the transmission case fitting.
12. Connect a hose to the outlet (front) fitting on the transmission case.
13. Repeat Steps 5 through 8. If the flow is now adequate as described in Step 10, refer to Section 07-02 for diagnosis of the transmission fluid cooler (7A095). If the flow is not adequate, internal transmission repair is required. Possible cause is the pump, converter assembly or both.

Transmission Fluid Cooler and Cooler Tubes Flushing and Cleaning

CAUTION: Test the Rotunda Torque Converter/Oil Cooler Cleaner 014-00028 or equivalent to make sure that a vigorous fluid flow is present before proceeding. Replace the system filter if the flow is weak or contaminated.

1. Disconnect the fluid cooler tubes from the transmission case fittings.
2. Connect the Rotunda Torque Converter/Oil Cooler Cleaner 014-00028 and Rotunda Oil Cooler Flusher Kit 014-00752 or equivalent as follows:
   a. Connect the pressure line to the fluid cooler inlet (rear) tube.
   b. Connect the return line to the fluid cooler outlet (front) tube.
   c. Place the outlet end of return line in the solvent tank reservoir.
3. Switch the solvent pump on. Allow the solvent to circulate a minimum of five minutes. During this time, cycle the solvent pump on and off to help dislodge contaminants.
4. Switch the solvent pump off.
5. Disconnect the pressure line from the fluid cooler inlet (rear) tube.
6. Using 50 psi (maximum) regulated compressed air, blow through the fluid cooler inlet tube until all solvent is removed.
7. Disconnect the return line from the fluid cooler outlet (front) tube.
8. Connect the fluid cooler tubes to the transmission case fittings. Tighten cooler tube fittings to 16-24 N·m (12-18 lb-ft).
9. Fill the transmission to the specified level with Motorcraft MERCON® Multi-Purpose Automatic Transmission Fluid XT-2-QDX or MERCON® equivalent. Refer to the Fluid Capacity chart in the Specifications portion of this section.

Transmission Fluid Cooler Tube Replacement

When fluid leakage is found at the transmission fluid cooler, the transmission fluid cooler must be replaced. Refer to Section 07-02.

When transmission fluid cooler steel lines must be replaced, each replacement line must be fabricated from the same size inside diameter and length steel line as the original line.

Using the old line as a guide, bend the new line as required. Add the necessary fittings, and install the line.

After the fittings have been tightened, check and add fluid as necessary. Check for fluid leaks.

DIAGNOSIS AND TESTING (Continued)

Diagnosis by Symptom

The Diagnosis by Symptom Charts give the technician diagnostic information and direction and list possible components, using a SYMPTOM as a starting point.

The Diagnosis by Symptom Charts are divided into two categories: electrical routines, indicated by 200 series numbers, and hydraulic / mechanical routines, indicated by 300 series numbers. The electrical routines list the possible electrical components that could have caused or contributed to the symptom described. The hydraulic / mechanical routines list the possible hydraulic or mechanical components that could cause or contribute to the symptom described.

Diagnosis by Symptom Chart Directions

1. Using the Diagnosis by Symptom Index, select the symptom / concern that best describes the condition.
2. Turn to the routine indicated in the diagnosis by symptom index.
3. Always begin diagnosis of a symptom by performing the following:
   - preliminary inspections
   - verification of condition
   - fluid level check
   - other test procedures as directed
4. NOTE: Not all concerns and conditions with electrical components will set a diagnostic trouble code (DTC). Be aware that the components listed may still be the cause. Verify proper function of those components prior to proceeding to the hydraulic / mechanical routine listed.

   Begin with the electrical routine if indicated. Follow the reference or action required statements. Always perform the On-Board Diagnostic Tests as required. NEVER SKIP STEPS. Repair as required. If the concern is still present after electrical diagnosis, proceed to the hydraulic / mechanical routine listed.
5. The hydraulic / mechanical routines list possible hydraulic or mechanical components that could cause the concern. These components are listed in the removal sequence and by most likely cause. You must inspect all components listed to make a proper repair.

Official Licensed Product
Ford Motor Company

Diagnosis by Symptom Index

DIAGNOSIS BY SYMPTOM INDEX

E4OD	Routines	
	Electrical[a]	Mechanical / Hydraulic
Engagement Concerns		
• No FORWARD only	201	301
• No REVERSE only	202	302
• Harsh REVERSE only	203	303
• Harsh FORWARD only	204	304
• Delayed / soft REVERSE only	205	305
• Delayed / soft FORWARD only	206	306
• No FORWARD and no REVERSE only	207	307
• Harsh FORWARD and REVERSE	208	308
• Delayed / soft FORWARD and REVERSE	209	309
Shift Concerns		
• Some or all shifts missing	210	310
• Timing concerns	—	—
— Early / late (some / all)	211	311
— Erratic / hunting (some / all)	212	312
• Feel concerns	—	—
— Soft / slipping (some / all)	213	313
— Harsh (some / all)	214	314
• No 1st gear in drive, engages in higher gear	215	315
• No MANUAL 1st gear	216	316
• No MANUAL 2nd gear	217	317
Torque Converter Clutch Operation Concerns		
• No apply	240	340
• Always applied / stalls vehicle	241	341
• Cycling / shudder / chatter	242	342

(Continued)

DIAGNOSIS AND TESTING (Continued)

DIAGNOSIS BY SYMPTOM INDEX (Cont'd)

E4OD	Routines	
	Electrical[a]	Mechanical/ Hydraulic
Other Concerns		
• Shift lever efforts high	251	351
• External leaks	252	352
• Poor vehicle performance	253	353
• Noise/vibration — forward or REVERSE	254	354
• Engine will not crank	255	355
• No PARK range	256	356
• Overheating	257	357
• No engine braking in MANUAL 2 position only	258	358
• No engine braking in MANUAL 1 position only	259	359
• No engine braking with OVERDRIVE cancelled	260	360
• Fluid venting or foaming	261	361
Reference		
Pressure chart	—	401
Check ball chart	—	501
Band/clutch application chart	—	601
solenoid operation chart	—	701

(a) Perform electrical routines first.

ENGAGEMENT CONCERN: NO FORWARD ONLY

Possible Component	Reference/Action
201 — ELECTRICAL ROUTINE	
• No electrical concerns	
301 — HYDRAULIC/MECHANICAL ROUTINE	
Fluid	
• Improper level	• Adjust fluid to proper level.
• Condition	• Inspect according to instructions under Fluid Condition Check.
Shift Linkage (Internal/External) or Cable	
• Damaged, misadjusted, disconnected	• Inspect and service as required. Verify linkage adjustment. After linkage repair/adjustment, verify that the TR sensor is properly adjusted.
Improper Pressures	
• Low line pressure	• Check pressure at line tap. Perform Line Pressure and Stall Speed Tests. Refer to Pressure Chart No. 401 for specification. If pressures are low, check the following possible components: Pump inlet filter and seal assembly, main controls, pump assembly, forward clutch assembly.
Filter Assembly and Seal	
• Plugged, damaged	• Inspect filter assembly and seal for damage. Replace as required.
• Filter seal damaged, cut	
Main Controls	
• Manual valve stuck, damaged	• Inspect for damage and repair/replace as required.
• Control body housing leakage	
• Bolts not tightened to specification	• Retighten bolts to specification.
• Gaskets damaged	• Inspect gasket for damage and replace as required.
Forward Clutch Assembly	
• Assembly	• Air check clutch assembly as outlined in this section.
• Piston, seal; check ball damaged, missing, not seating	• Inspect seals for damage, check ball seating, location. Replace piston assembly as required.
• Feed bolt loose, missing	• Install new feed bolts and tighten to specification.
• Center support damaged, holes blocked/missing	• Inspect for damage. Repair/replace as required.
• Forward clutch sealing rings damaged	• Inspect for damage. Replace as required.
• Forward clutch ring gear damaged	• Inspect for damage. Replace as required.
• Friction elements damaged, worn; spline teeth damaged, missing	• Check for abnormal wear, damage. Replace as required.

(Continued)

Official Licensed Product Ford Motor Company

DIAGNOSIS AND TESTING (Continued)

ENGAGEMENT CONCERN: NO FORWARD ONLY (Cont'd)

Possible Component	Reference/Action
Forward/Reverse Sun Gear Damaged	• Inspect for damage. Replace as required.
Front Planet Assembly Damaged	• Inspect for damage. Replace as required.
Output Shaft • Splines damaged	• Inspect for damage. Replace as required.
Low One-Way Clutch Assembly (Planetary) • Worn, damaged or misassembled	• Inspect for damage. Replace as required.

ENGAGEMENT CONCERN: NO REVERSE ONLY

Possible Component	Reference/Action
202 — ELECTRICAL ROUTINE	
• No electrical concerns	
302 — HYDRAULIC/MECHANICAL ROUTINE	
Fluid • Improper level • Condition	 • Adjust fluid to proper level. • Inspect per instructions under Fluid Condition Check.
Shift Linkage (Internal/External) or Cable • Damaged or misadjusted	• Inspect and repair as required. Verify linkage adjustment. After linkage repair/adjustment, verify that the TR sensor is properly adjusted.
Improper Pressures • Low line pressure	• Check pressure at line pressure tap. Perform Line Pressure and Stall Speed Tests. Refer to Pressure Chart No. 401 for specifications. If pressures are low, check the following possible components: Pump inlet filter and seal assembly, main control, pump assembly, reverse clutch assembly, coast clutch assembly, direct clutch assembly.
Filter Assembly and Seal • Plugged, damaged or seal missing	• Inspect filter assembly and seal for damage. Replace as required.
Main Controls • Bolts not tightened to specification • Gaskets damaged • Valve springs, main control valve body, direct clutch accumulator valve damaged, stuck, missing, or misassembled • Reinforcing plate improperly installed; bolts not tightened to specification	 • Retighten bolts to specification. • Inspect for damage and replace. • Inspect for damage. Repair/replace as required. • Inspect for proper installation. Retighten bolts to specification.
Direct Clutch Assembly **NOTE:** Only if third gear also is inoperative. • Assembly • Seals or piston damaged • Clutch plates burnt, missing • Check ball damaged, missing • Center support damaged or holes blocked • Center support hub damaged	 • Air check clutch assembly as described in this section. • Inspect for damage. Replace as required. • Inspect for damage. Replace as required. • Inspect for damage. Replace as required. • Inspect for damage. Repair/replace as required. • Inspect for damage. Replace as required.
Reverse Clutch Assembly • Assembly • Seals or piston damaged • Piston bore damaged • Friction elements damaged, worn; missing plates • Feed hole damaged, plugged, missing	 • Air check clutch assembly as described in this section. • Inspect for damage. Replace as required. • Inspect for damage. Replace as required. • Inspect for damage. Replace as required. • Inspect for damage. Repair/replace as required.

Official Licensed Product
Ford Motor Company

DIAGNOSIS AND TESTING (Continued)

ENGAGEMENT CONCERN: HARSH REVERSE ONLY

Possible Component	Reference/Action
203 — ELECTRICAL ROUTINE	
Powertrain Control System • Electrical inputs/outputs, vehicle wiring harnesses, PCM, throttle position sensor, VSS, electronic pressure control	• Run On-Board Diagnostics. Refer to 1997 Powertrain Control/Emissions Diagnosis Manual[a] for 7.3L DI Diesel Engine or to 1996 PC/ED[a] for all other engines for diagnosis. Perform Engagement Test, Electronic Pressure Control Test. Perform Pinpoint Test E using Transmission Tester and Cable and Overlay as outlined in this section. Repair/replace as required. Clear codes, road test, rerun On-Board Diagnostics.
303 — HYDRAULIC/MECHANICAL ROUTINE	
Improper Pressures • High line pressure	• Check pressure at line pressure tap. Perform Line Pressure and Stall Speed Tests. Refer to Pressure Chart No. 401 for specification. If high, check the main controls.
Main Controls • Bolts not tightened to specification • Gasket damaged • EPC solenoid stuck or damaged	• Retighten bolts to specification. • Inspect for damage and replace. • Perform Electronic Pressure Control Tests described in routine No. 203. Replace as required.
Pump Assembly • Bolts not tightened to specification • Gaskets damaged • Main regulator/booster valve stuck, damaged, misassembled	• Retighten bolts to specification. • Inspect for damage and replace. • Inspect for damage. Repair/replace as required.

a Can be purchased as a separate item.

ENGAGEMENT CONCERN: HARSH FORWARD ONLY

Possible Components	Reference/Action
204 — ELECTRICAL ROUTINE	
Powertrain Control System • Electrical inputs/outputs, vehicle wiring harnesses, PCM, throttle position sensor, VSS, electronic pressure control	• Run On-Board Diagnostics. Refer to 1997 Powertrain Control/Emissions Diagnosis Manual[a] for 7.3L DI Diesel Engine or to the 1996 PC/ED[a] for all other engines for diagnosis. Perform Engagement Test, Electronic Pressure Control Test. Perform Pinpoint Test E using Transmission Tester and Cable and Overlay as outlined in this section. Repair/replace as required. Clear codes, road test, rerun On-Board Diagnostics.
304 HYDRAULIC/MECHANICAL ROUTINE	
Improper Pressures • High line pressure	• Check pressure at line pressure tap. Perform Line Pressure and Stall Speed Tests. Refer to Pressure Chart No. 401 for specification. If pressures are high, check main controls.
Main Controls • Bolts not tightened to specification • Gaskets damaged • Electronic pressure control solenoid stuck or damaged • Engagement control valve, springs — damaged, stuck, misassembled, contaminated	• Retighten bolts to specification. • Inspect for damage and replace. • Perform Electronic Pressure Control Tests described in routine No. 204. Replace as required. • Inspect for damage. Repair/replace as required.
Pump Assembly • Bolts not tightened to specification • Gaskets damaged • Main regulator/booster valve stuck, damaged, misassembled	• Retighten bolts to specification. • Inspect for damage and replace. • Inspect for damage. Repair/replace as required.
Forward Clutch Assembly • Assembly • Plates burnt, missing; check ball missing, damaged; hub damaged	• Air check clutch assembly as described in this section. • Inspect for damage. Replace as required.

a Can be purchased as a separate item.

DIAGNOSIS AND TESTING (Continued)

ENGAGEMENT CONCERN: DELAYED/SOFT REVERSE ONLY

Possible Component	Reference/Action
205 — ELECTRICAL ROUTINE	
• No electrical concerns	
305 — HYDRAULIC/MECHANICAL ROUTINE	
Shift Linkage or Cable	
• Damaged, misadjusted	• Inspect and repair as required. Verify linkage adjustment. After linkage repair/adjustment, verify that the TR sensor is properly adjusted.
Main Controls	
• Bolts not tightened to specification	• Retighten bolts to specification.
• Gaskets damaged	• Inspect for damage and replace.
• Direct clutch accumulator regulator valve, low reverse modulator valve, springs — stuck, damaged, missing, misassembled	• Inspect for damage. Repair/replace as required.
• Check ball missing, damaged	• Inspect for damage. Replace as required.
• Reinforcing plate improperly installed, bolts not tightened to specification	• Inspect for proper installation. Retighten bolts to specification.
Coast Clutch Assembly	• Air check clutch assembly as described in this section.
• Assembly	• Inspect for damage. Replace as required.
• Piston seals damaged, missing	• Inspect for damage. Replace as required.
• Stator support seals damaged	• Inspect for damage. Repair/replace as required.
Reverse Clutch Assembly	• Air check clutch assembly as described in this section.
• Assembly	• Inspect for damage. Replace as required.
• Seals, piston damaged	• Inspect for damage. Replace as required.
• Friction elements — damaged, worn	• Inspect for damage. Repair/replace as required.
• Assembly leakage	

Official Licensed Product
Ford Motor Company

ENGAGEMENT CONCERN: DELAYED/SOFT FORWARD ONLY

Possible Component	Reference/Action
206 — ELECTRICAL ROUTINE	
• No electrical concerns	
306 — HYDRAULIC/MECHANICAL ROUTINE	
Fluid	
• Improper level	• Adjust fluid to proper level.
• Condition	• Inspect according to instructions under Fluid Condition Check.
Shift Linkage or Cable	
• Damaged, misadjusted	• Inspect and repair as required. Verify linkage adjustment. After linkage repair/adjustment, verify that the TR sensor is properly adjusted.
Improper Pressures	
• Low line pressure	• Check pressure at line tap. Perform Line Pressure and Stall Speed Tests. Refer to Pressure Chart No. 401 for specification. If pressures are low, check the following possible components: pump inlet filter and seal assembly, main controls, pump assembly.
Filter Assembly and Seal	
• Plugged, damaged	• Inspect filter assembly and seal for damage. Replace as required.
• Filter seal damaged	
Main Controls	
• Bolt not tightened to specification	• Retighten bolts to specification.
• Gaskets damaged	• Inspect for damage and replace.
Center Support Assembly	
• Feedbolts missing, improperly tightened	• Install new feedbolts and tighten to specification.
• Hub damaged, holes blocked or missing	• Inspect for damage. Repair/replace as required.

(Continued)

DIAGNOSIS AND TESTING (Continued)

ENGAGEMENT CONCERN: DELAYED/SOFT FORWARD ONLY (Cont'd)

Possible Component	Reference/Action
Forward Clutch Assembly	
• Assembly	• Air check clutch assembly as described in this section.
• Seals or piston damaged	• Inspect seals for damage. Replace as required.
• Check balls damaged, missing	• Inspect for mislocation, poor seating, damage. Replace cylinder as required.
• Clutch hub damaged	• Inspect for damage. Replace as required.
• Friction elements damaged, missing	• Inspect for damage. Replace as required.
• Forward clutch cylinder seals damaged	• Inspect for damage. Replace as required.

ENGAGEMENT CONCERN: NO FORWARD AND NO REVERSE ONLY

Possible Component	Reference/Action
207 — ELECTRICAL ROUTINE	
• No electrical concerns	
307 — HYDRAULIC/MECHANICAL ROUTINE	
Fluid	
• Improper level	• Adjust fluid to proper level. Inspect according to instructions under Fluid Condition Check.
• Condition	
• Converter drainback valve	• Inspect converter drainback valve. Perform Torque Converter Drainback Test. Replace as required.
Shift Linkage (Internal/External) or Cable	
• Damaged, misadjusted or disconnected	• Inspect for damage. Service as required. Verify linkage adjustment. After linkage repair/adjustment, verify that the TR sensor is properly adjusted.
Improper Pressures	
• Low line pressures	• Check pressure at line tap. Perform Line Pressure Test. Refer to Pressure Chart No. 401 for specification. If pressures are low, check the following possible components: pump inlet filter and seal assembly, main controls, pump assembly, forward clutch assembly.
Filter Assembly and Seal	
• Plugged, damaged	• Inspect filter assembly and seal for damage. Replace as required.
• Filter seal damaged or cut	
Main Controls	
• Manual valve — stuck, damaged	• Inspect for damage. Repair/replace as required.
• Control body housing leakage	
• Bolts not tightened to specification	• Retighten bolts to specification.
• Gaskets damaged	• Inspect for damage and replace.
Pump Assembly	
• Bolts not tightened to specification	• Retighten bolts to specification.
• Gaskets damaged	• Inspect for damage and replace.
• Main regulator/booster valve damaged, missing, misassembled	• Inspect for damage. Repair/replace as required.
• Excessive pump gear end clearance	• Perform pump gear end clearance check as described in this section.
Center Support Assembly	
• Damaged, holes blocked.	• Inspect for damage. Repair/replace as required.
• Feedbolts missing or improperly tightened	• Install new bolts and tighten to specification.

(Continued)

Official Licensed Ford Motor Company

DIAGNOSIS AND TESTING (Continued)

ENGAGEMENT CONCERN: NO FORWARD AND NO REVERSE ONLY (Cont'd)

Possible Component	Reference/Action
Forward/Reverse Sun Gear	
• Damaged	• Inspect for damage. Replace as required.
Forward Planet Assembly	
• Damaged	• Inspect for damage. Replace as required.
Input Shaft/Center Shaft/Output Shaft	
• Splines damaged	• Inspect for damage. Replace as required.
Overdrive Carrier	
• Damaged	• Inspect for damage. Replace as required.
Drive in (D) with (D) Cancelled	
NOTE: For diagnostic purposes only. Not for extended driving.	
Overdrive OWC	
• Misassembled, damaged	• Inspect for damage. Repair/replace as required.
• Sprags or races damaged	• Inspect for damage. Replace as required.

ENGAGEMENT CONCERN: HARSH FORWARD AND REVERSE

Possible Component	Reference/Action
208 — ELECTRICAL ROUTINE	
Powertrain Control System	
• Electrical inputs/outputs, vehicle wiring harnesses, PCM, electronic pressure control, TP sensor	• Run On-Board Diagnostics. Refer to 1997 PC/ED[a] for 7.3L DI Diesel Engine or to 1996 PC/ED[a] for all other engines for diagnosis. Perform Engagement Test, Electronic Pressure Control Test. Perform Pinpoint Test E using Transmission Tester and Cable and Overlay as outlined in this section. Repair/replace as required. Clear codes, road test and rerun On-Board Diagnostics.
308 — HYDRAULIC/MECHANICAL ROUTINE	
Improper Pressures	
• High line pressure	• Check pressure at line pressure tap. Perform Line Pressure Test. Refer to Pressure Chart No. 401 for specification. If high, check main controls.
Main Controls	
• Bolts not tightened to specification	• Retighten bolt to specification.
• Gasket damaged	• Inspect for damage and replace.
• EPC solenoid stuck or damaged	• Perform Electronic Pressure Control Tests described in routine No. 208. Replace as required.
• Engagement control valve stuck, damaged, contaminated, misassembled	• Inspect for damage, contamination. Repair/replace as required.
Pump Assembly	
• Bolts not tightened to specification	• Retighten bolts to specification.
• Gaskets damaged	• Inspect for damage and replace.
• Main regulator/booster valve stuck, damaged, misassembled	• Inspect for damage. Repair/replace as required.

a Can be purchased as a separate item.

ENGAGEMENT CONCERN: DELAYED/SOFT FORWARD AND REVERSE

Possible Component	Reference/Action
209 — ELECTRICAL ROUTINE	
• No electrical concerns	
309 — HYDRAULIC/MECHANICAL ROUTINE	
Shift Linkage or Cable	
• Damaged, misadjusted	• Inspect and repair as required. Verify linkage adjustment. After linkage repair/adjustment, verify that the TR sensor is properly adjusted.

(Continued)

Official Licensed Ford Motor Company

DIAGNOSIS AND TESTING (Continued)

ENGAGEMENT CONCERN: DELAYED/SOFT FORWARD AND REVERSE (Cont'd)

Possible Component	Reference/Action
Fluid • Improper level	• Adjust to proper level.
Improper Pressures • Low line pressure	• Check pressure at line tap. Refer to Pressure Chart No. 401 for specification. If low check the following components: pump inlet filter/seal assembly, main control, pump assembly.
Filter Assembly and Seal • Plugged, damaged • Seal damaged, cut	• Inspect filter assembly and seal for damage. Replace as required.
Main Controls • Bolts not tightened to specification • Gaskets damaged • Springs — stuck, damaged, missing, misassembled	• Retighten bolts to specification. • Inspect for damage and replace. • Inspect for damage. Repair/replace as required.
Torque Converter Drainback (Initial Engagement Only)	• Refer to Torque Converter Drainback Test procedures in this section for diagnosis.

SHIFT CONCERNS: SOME OR ALL SHIFTS MISSING

Possible Component	Reference/Action
210 — ELECTRICAL ROUTINE	
Powertrain Control System • Electrical inputs/outputs, vehicle wiring harness, PCM, throttle position sensor, TR sensor, VSS, SS1, SS2	• Perform Shift Point Road Test. • Run On-Board Diagnostics. Refer to 1997 PC/ED[a] for 7.3L DI Diesel Engine or to 1996 PC/ED[a] for all other engines for diagnosis. Perform Pinpoint Tests A and D using the Transmission Tester, Cable and Overlay and the Transmission Range (TR) Sensor Cable B (MLPS Manual Lever Position Sensor Cable) as outlined in this section. Repair/replace as required. Clear code, road test, rerun On-Board Diagnostics.
310 — HYDRAULIC/MECHANICAL ROUTINE	
Fluid • Improper level • Condition	• Adjust fluid to proper level. Inspect according to instructions under Fluid Condition Check.
Shift Linkage (Internal/External) or Cable • Damaged, misadjusted, disconnected	• Inspect and service as required. Verify linkage adjustment. After linkage repair/adjustment, verify that the TR sensor is properly adjusted.
Filter Assembly and Seal • Plugged, damaged • Filter seal damaged	• Inspect filter assembly and seal for damage. Replace as required.
Main Controls • Valves stuck, damaged, misassembled	• Inspect for damage. Repair/replace as required.
For diagnosis related to a specific shift, see Reference/Action	• To diagnose specific No Shift, refer to the appropriate shift routine. — No Shift 1-2, Routine 220/320 — No Shift 2-3, Routine 221/321 — No Shift 3-4, Routine 222/322 — No Shift 4-3, Routine 223/323 — No Shift 3-2, Routine 224/324 — No Shift 2-1, Routine 225/325

a Can be purchased as a separate item.

Ford Motor Company Licensed

DIAGNOSIS AND TESTING (Continued)

SHIFT CONCERNS: SHIFT TIMING — EARLY/LATE (SOME/ALL)

Possible Component	Reference/Action
211 — ELECTRICAL ROUTINE	
Powertrain Control System • Electrical inputs/outputs, vehicle wiring harnesses, PCM, throttle position sensor, TFT sensor, VSS, SS1, SS2	• Perform Shift Point Road Test. • Run On-Board Diagnostics. Refer to 1997 PC/ED[a] for 7.3L DI Diesel Engine or to 1996 PC/ED[a] for all other engines for diagnosis. Perform Pinpoint Tests A and B using Transmission Tester and Cable and Overlay as outlined in this section. Repair/replace as required. Clear codes, road test and rerun On-Board Diagnostics.
Other Electrical Concerns • No power to PCM, keep-alive memory erased from PCM • Programmable Speedometer/Odometer Module improperly programmed or damaged	• Restore memory by performing Transmission Drive Cycle Test. • Refer to this service manual for programmable speedometer/odometer module diagnostic and programming procedures.
311 — HYDRAULIC/MECHANICAL ROUTINE	
Other • Tire size change • Speedometer gear change (model dependant) • Axle ratio change	• Refer to the specification decal on door panel and verify that vehicle has original equipment. Changes in tire size or axle ratio may affect shift timing.
Power/Engine Performance — Poor Engine Performance	• Refer to Routine No. 253/353.
Main Controls • Valves, accumulators, stuck or damaged • Gaskets damaged • Bolts not tightened to specification	• Inspect for damage, contamination. Repair/replace as required. • Inspect for damage and replace. • Retighten bolts to specification.
For diagnosis related to a specific shift or if all above are OK, see Reference/Action	• To diagnose specific shift/timing concern refer to Soft/Slipping routines: — Soft/Slipping Shift 1-2, Routine 226/326 — Soft/Slipping Shift 2-3, Routine 227/327 — Soft/Slipping Shift 3-4, Routine 228/328 — Downshifts, 229/329

a Can be purchased as a separate item.

SHIFT CONCERNS: TIMING — ERRATIC/HUNTING (SOME/ALL)

Possible Component	Reference/Action
212 — ELECTRICAL ROUTINE	
Powertrain Control System • Vehicle wiring harnesses, PCM, electrical inputs/outputs, throttle position sensor, TFT sensor, SS1, SS2, TR sensor, TCC solenoid	• Perform Shift Point Road Test and Torque Converter Clutch Operation Tests. • Run On-Board Diagnostics. Refer to 1997 PC/ED Manual[a] for 7.3L DI Diesel Engine or to 1996 PC/ED[a] for all other engines for diagnosis. Perform Pinpoint Tests A, B, C, D using Transmission Tester, Cable and Overlay and the Transmission Range (TR) Sensor Cable B (MLPS Manual Lever Position Sensor Cable) as outlined in this section. Repair/replace as required. Clear codes, road test and rerun On-Board Diagnostics.
With Speed Control ON • Torque converter cycling • Shift cycling (3-4 / 4-3 shifts)	• Re-evaluate with speed control off or depress TCS (overdrive cancelled). If condition still exists, proceed with diagnosis.
312 — HYDRAULIC/MECHANICAL ROUTINE	
Fluid • Improper level	• Adjust fluid to proper level.
Filter Assembly and Seal • Plugged, damaged • Filter seal damaged	• Inspect filter assembly and seal for damage. Replace as required.

(Continued)

Official Licensed Product Ford Motor Company

DIAGNOSIS AND TESTING (Continued)

SHIFT CONCERNS: TIMING — ERRATIC/HUNTING (SOME/ALL) (Cont'd)

Possible Component	Reference/Action
Main Control	
• Valves, accumulators, damaged, stuck	• Inspect for damage. Repair/replace as required.
• Bolts not tightened to specification	• Retighten bolts to specification.
• Gaskets damaged	• Inspect for damage and replace.
• Wrong parts used in rebuild	• Verify that proper parts were used.
Torque Converter Clutch	• Refer to Torque Converter Cycling (No. 342).
For further diagnosis of timing issues, refer to Reference/Action	• Refer to the following shift routine(s) for further diagnosis:

Shifts	No	Soft/Slip	Harsh
1-2	220/320	226/326	232/332
2-3	221/321	227/327	233/333
3-4	222/322	228/328	234/334
4-3	223/323	229/329	235/335
3-2	224/324	229/329	236/336
2-1	225/325	223/329	237/337

DD0571-A

a Can be purchased as a separate item.

Official Licensed Product Ford Motor Company

SHIFT CONCERNS: FEEL — SOFT/SLIPPING (SOME/ALL)

Possible Component	Reference/Action
213 — ELECTRICAL ROUTINE	
Powertrain Control System	
• Electrical inputs/outputs, vehicle wiring harnesses, PCM, throttle position sensor, electronic pressure control, TFT sensor	• Perform Shift Point Road Test. • Run On-Board Diagnostics. Refer to 1997 PC/ED Manual[a] for 7.3L DI Diesel Engine or to 1996 PC/ED[a] for all other engines for diagnosis. Perform Pinpoint Tests E and B using Transmission Tester and Cable and Overlay as outlined in this section. Repair/replace as required. Clear codes, road test, rerun On-Board Diagnostics.
313 — HYDRAULIC/MECHANICAL ROUTINE	
Fluid	
• Improper level	• Adjust fluid to proper level.
• Condition	• Inspect according to instructions in this section under Fluid Condition Check.
Improper Pressures	
• Low line pressure	• Check pressures at line pressure tap. Perform Line Pressure Tests. Refer to Pressure Chart No. 401 for specifications. If pressures are low or all shifts are soft/slipping, go to main controls.
Main Controls	
• Bolts not tightened to specification	• Retighten bolts to specification.
• Gaskets damaged	• Inspect for damage and replace.
• Line modulator valve springs damaged, stuck, misassembled	• Inspect for damage, contamination. Repair/replace as required.
• EPC solenoid failure to operate in a normal manner	• Refer to Electrical Routine No. 213.
• Accumulator assembly damaged or wrong assembly	• Inspect for damage. Replace as required. Verify correct assembly is used.
Pump Assembly	
• Bolts not tightened to specification	• Retighten bolts to specification.
• Gaskets damaged	• Inspect for damage and replace.
• Main regulator/booster valve damaged, misassembled	• Inspect for damage. Repair/replace as required.
• Electronic pressure control air bleed check valve damaged or missing	• Inspect for damage. Replace as required.

(Continued)

DIAGNOSIS AND TESTING (Continued)

SHIFT CONCERNS: FEEL — SOFT/SLIPPING (SOME/ALL) (Cont'd)

Possible Component	Reference/Action
For diagnostics related to specific shifts, see Reference/Action	• Refer to the following Shift Routine(s) for further diagnosis: — Soft/Slipping Shift 1-2, Routine 226/326 — Soft/Slipping Shift 2-3, Routine 227/327 — Soft/Slipping Shift 3-4, Routine 228/328 — Downshifts, 229/329

a Can be purchased as a separate item.

SHIFT CONCERNS: FEEL — HARSH (SOME/ALL)

Possible Component	Reference/Action
214 — ELECTRICAL ROUTINE	
Powertrain Control System • Electrical inputs/outputs, vehicle wiring harnesses, PCM, electronic pressure control, TFT sensor, throttle position sensor, TR sensor	• Run On-Board Diagnostics. Refer to 1997 PC/ED[a] for 7.3L DI Diesel Engine or to 1996 PC/ED[a] for all other engines for diagnosis. Perform Pinpoint Tests B, D and E using Transmission Tester, Cable and Overlay and the Transmission Range (TR) Sensor Cable B (MLPS Manual Lever Position Sensor Cable) as outlined in this section. Repair/replace as required. Clear codes, road test and rerun On-Board Diagnostics.
Engine Performance Issues	• Refer to 1997 PC/ED[a] for 7.3L DI Diesel Engine or to 1996 PC/ED[a] for all other engines for diagnosis.
314 — HYDRAULIC/MECHANICAL ROUTINE	
Fluid • Improper level • Condition	 • Adjust fluid to proper level. • Inspect according to instructions in this section under Fluid Condition Check.
Improper Pressures • High line pressure	 • Check pressures at line pressure tap. Perform Line Pressure and Stall Speed Tests. Refer to Pressure Chart No. 401 for specifications. If pressures are high or all shifts are harsh, go to main controls.
Main Controls • Bolts not tightened to specification • Gaskets damaged • Line modulator valve/spring misassembled, stuck, damaged • EPC solenoid failure to operate in a normal manner • Accumulator assembly damaged or wrong assembly	 • Retighten bolts to specification. • Inspect for damage and replace. • Inspect for damage, contamination. • Replace as required. • Refer to Electrical Routine No. 214. • Inspect for damage. Replace as required. Verify correct assembly is used.
Pump Assembly • Bolts not tightened to specification • Gaskets damaged • Main regulator/booster valve damaged, misassembled	 • Retighten bolts to specification. • Inspect for damage and replace. • Inspect for damage. Repair/replace as required.
For diagnostics related to a specific shift, see Reference/Action	• Refer to the following Shift Routine(s) for further diagnosis: — Harsh Shift 1-2, Routine 232/332 — Harsh Shift 2-3, Routine 233/333 — Harsh Shift 3-4, Routine 234/334 — Harsh Shift 4-3, Routine 235/335 — Harsh Shift 3-2, Routine 236/336 — Harsh Shift 2-1, Routine 237/337

a Can be purchased as a separate item.

Official Licensed Product
Ford Motor Company

DIAGNOSIS AND TESTING (Continued)

SHIFT CONCERNS: NO 1ST GEAR IN DRIVE, ENGAGES IN HIGHER GEAR

Possible Component	Reference/Action
215 — ELECTRICAL ROUTINE	
Powertrain Control System • Electrical inputs/outputs, vehicle wiring harnesses, PCM, SS1, SS2, TR sensor	• Run On-Board Diagnostics. Refer to 1997 PC/ED[a] for 7.3L DI Diesel Engine and to 1996 PC/ED[a] for all other engines for diagnosis. Perform Pinpoint Tests A and D using the Transmission Tester, Cable and Overlay and the Transmission Range (TR) Sensor Cable B (MLPS Manual Lever Position Sensor Cable) as outlined in this section. Repair/replace as required. Clear codes, road test and rerun On-Board Diagnostics.
315 — HYDRAULIC/MECHANICAL ROUTINE	
Shift Linkage (Internal/External) or Cables, Transmission Range (TR) Sensor • Damaged, not connected, misadjusted	• Inspect and repair as required. Verify linkage adjustment. After linkage repair/adjustment verify that the TR sensor is properly adjusted.
Main Controls • Bolts not tightened to specification • Gaskets damaged, misaligned • SS1, SS2 stuck or damaged • Solenoid regulator valve, 2-3 shift valve, 3-4 shift valve, D2 valve — stuck, missing, misassembled, damaged • Air bleeds for S1-S2 circuits missing • Wrong components used in rebuild	• Retighten bolts to specification. • Inspect for damage and replace. • Refer to Electrical Routine No. 215. • Inspect for damage. Repair/replace as required. • Inspect for damage. Replace case. • Verify that proper components were used. Replace as required.
Mechanical • Band servo, clutches damaged For diagnosis related to a specific gear, use Transmission Tester to determine gear	• Refer to proper disassembly procedures in this section. • Refer to the following routine(s) for further diagnosis: — No Shift 1-2, Routine 220/320 — No Shift 2-3, Routine 221/321 — No Shift 3-4, Routine 222/322
Reverse Ring Gear • Damaged gear lugs to reverse carrier	• Inspect for damage. Replace as required.
Low One-Way Clutch • Damaged, misassembled	• Inspect for damage, proper assembly. Repair/replace as required.

a Can be purchased as a separate item.

SHIFT CONCERNS: NO MANUAL 1ST GEAR

Possible Component	Reference/Action
216 — ELECTRICAL ROUTINE	
Powertrain Control System • Electrical inputs/outputs, vehicle wiring harnesses, PCM, SS1, SS2, TR sensor	• Run On-Board Diagnostics. Refer to 1997 PC/ED[a] for 7.3L DI Diesel Engine or to 1996 PC/ED[a] for all other engines for diagnosis. Perform Pinpoint Tests A and D using Transmission Tester, Cable and Overlay and the Transmission Range (TR) Sensor Cable B (MLPS Manual Lever Position Sensor Cable) as outlined in this section. Repair/replace as required. Clear codes, road test and rerun On-Board Diagnostics.
316 — HYDRAULIC/MECHANICAL ROUTINE	
Shift Linkage (Internal/External) or Cable • Damaged, misadjusted, not connected	• Inspect for damage. Repair as required. Verify linkage adjustment. After linkage repair/adjustment, verify that the TR sensor is properly adjusted.
Main Controls • Bolts not tightened to specification • Gaskets damaged • Manual control lever, manual valve, low reverse modulator valve, 1-2 shift valve, 2-3 shift valve, BS1 check ball, 4-3-2 timing valve — stuck, damaged	• Retighten bolts to specification. • Inspect for damage and replace. • Inspect for damage. Repair/replace as required.

(Continued)

Official Licensed Product Ford Motor Company

DIAGNOSIS AND TESTING (Continued)

SHIFT CONCERNS: NO MANUAL 1ST GEAR (Cont'd)

Possible Component	Reference/Action
• SS1 failure to operate in a normal manner	• Refer to Electrical Routine No. 216.
• Air bleed for SS1 circuit damaged or missing	• Inspect for damage. Replace case.
• Wrong parts used in rebuild	• Verify that proper parts were used.
Low One-Way Clutch Assembly	
• Damaged, misassembled	• Inspect for damage. Repair/replace as required.

a Can be purchased as a separate item.

SHIFT CONCERNS: NO MANUAL 2ND GEAR

Possible Component	Reference/Action
217 — ELECTRICAL ROUTINE	
Powertrain Control System	
• Electrical inputs/outputs, vehicle wiring harnesses, PCM, SS1, SS2, TR sensor	• Run On-Board Diagnostics. Refer to 1997 PC/ED[a] for 7.3L DI Diesel Engine or to 1996 PC/ED[a] for all other engines for diagnosis. Perform Pinpoint Tests A and D using Transmission Tester, Cable and Overlay and the Transmission Range (TR) Sensor Cable B (MLPS Manual Lever Position Sensor Cable) as outlined in this section. Repair/replace as required. Clear codes, road test and rerun On-Board Diagnostics.
317 — HYDRAULIC/MECHANICAL ROUTINE	
Shift Linkage (Internal/External) or Cable	
• Damaged, misadjusted	• Inspect for damage. Repair as required. Verify linkage/cable adjustment. After linkage/cable repair/adjustment, verify that the TR sensor is properly adjusted.
Main Controls	
• Bolts not tightened to specification	• Retighten bolts to specification.
• Gaskets damaged	• Inspect for damage and replace.
• 2-3 shift valve, 3-4 shift valve, manual 1-2 transition valve, spring — stuck, damaged, missing, misassembled	• Inspect for damage. Repair/replace as required.
• BS6, BS1 — missing, leaks or seats damaged	• Inspect for damage. Replace as required.
• Improper parts used in rebuild	• Verify that proper parts were used.
Intermediate Clutch Assembly	
• Assembly	• Air check clutch assembly as described in this section.
• Seals or piston damaged	• Inspect for damage. Replace as required.
• Friction elements worn, missing, damaged, misassembled	• Inspect for damage. Repair/replace as required.
• Ball check stuck/missing	• Inspect for damage. Repair/replace as required.
• Feedbolt torque incorrect, leaks, missing	• Inspect and retighten bolts as required.
• Cylinder assembly outer diameter/case bore damaged, leaking	• Inspect for damage. Repair/replace as required.
Intermediate One-Way Clutch Assembly	
• Case/sprags damaged, improperly assembled on inner race	• Inspect for damage. Repair/replace as required.

a Can be purchased as a separate item.

SHIFT CONCERNS: NO 1-2 SHIFT (AUTOMATIC)

Possible Component	Reference/Action
220 — ELECTRICAL ROUTINE	
Powertrain Control System	
• Electrical inputs/outputs, vehicle wiring harnesses, PCM, throttle position sensor, VSS, SS1, SS2	• Run On-Board Diagnostics. Refer to 1997 PC/ED[a] for 7.3L DI Diesel Engine or to 1996 PC/ED[a] for all other engines for diagnosis. Perform Pinpoint Test A using Transmission Tester and Cable and Overlay as outlined in this section. Repair/replace as required. Clear codes, road test and rerun On-Board Diagnostics.
320 — HYDRAULIC/MECHANICAL ROUTINE	
Shift Linkage (Internal/External) or Cable	
• Damage, misadjusted • TR sensor damaged, misadjusted	• Inspect for damage. Service as required. Verify linkage adjustment. After linkage repair/adjustment, verify that the TR sensor is properly adjusted.

(Continued)

DIAGNOSIS AND TESTING (Continued)

SHIFT CONCERNS: NO 1-2 SHIFT (AUTOMATIC) (Cont'd)

Possible Component	Reference/Action
Main Controls	
• Bolts not tightened to specification	• Retighten bolts to specification.
• Gaskets damaged, misaligned	• Inspect for damage and replace.
• SS2 failure to operate in a normal manner	• Refer to Electrical Routine No. 220.
• D2 valve, 1-2 shift valve, 1-2 manual transition valve, intermediate clutch accumulator regulator valves, springs — stuck, damaged, missing or misassembled	• Inspect for damage. Repair/replace as required.
• Air bleed for SS2 circuit damaged or missing	• Inspect for damage. Replace case.
• Wrong parts used in rebuild	• Verify that proper parts were used.
Intermediate Clutch Assembly	
• Assembly	• Air check clutch assembly as outlined in this section.
• Seals or piston damaged	• Inspect for damage. Replace as required.
• Friction elements worn, missing, damaged, misassembled	• Inspect for damage. Repair/replace as required.
• Ball check stuck/missing	• Inspect for damage. Repair/replace as required.
• Feedbolt torque incorrect, leaks, missing	• Inspect and retighten bolts as required.
• Cylinder assembly outer diameter/case bore damaged, leaking	• Inspect for damage. Replace as required.
Intermediate One-Way Clutch Assembly	
• Cage/sprags damaged, improperly assembled on inner race	• Inspect for damage. Repair/replace as required.
• Improper components used in rebuild	• Verify that proper components are used.

a Can be purchased as a separate item.

SHIFT CONCERNS: NO 2-3 SHIFT (AUTOMATIC)

Possible Component	Reference/Action
221 — ELECTRICAL ROUTINE	
Powertrain Control System	
• Electrical inputs/outputs, vehicle wiring harness, PCM, throttle position sensor, VSS, SS1, SS2	• Run On-Board Diagnostics. Refer to 1997 PC/ED[a] for 7.3L DI Diesel Engine or to 1996 PC/ED[a] for all other engines for diagnosis. Perform Pinpoint Test A using Transmission Tester and Cable and Overlay as outlined in this section. Repair/replace as required. Clear codes, road test and rerun On-Board Diagnostics.
321 — HYDRAULIC/MECHANICAL ROUTINE	
Main Controls	
• Bolts not tightened to specification	• Retighten bolts to specification.
• Gaskets damaged	• Inspect for damage and replace.
• SS1 failure to operate in a normal manner	• Refer to Electrical Routine No. 221.
• Direct clutch accumulator regulator valve, 2-3 shift valve, springs — stuck, missing, damaged, misassembled	• Inspect for damage. Repair/replace as required.
• Air bleed for SS2 circuit damaged or missing	• Inspect for damage. Replace case.
• Improper components used in rebuild	• Verify that proper components are used.
Center Support Assembly	
• Feedbolts missing, not tightened to specification	• Inspect, install new feedbolts and tighten to specification.
• Seal rings damaged	• Inspect for damage. Replace as required.
• Assembly damaged	• Inspect for damage. Replace as required.
• Outside diameter or case bore damaged or leaking	• Inspect for damage. Replace as required.
Direct Clutch Assembly	
• Assembly	• Air check clutch assembly as outlined in this section.
• Stator support hub seals damaged	• Inspect for damage. Replace as required.
• Seals, piston, cylinder damaged	• Inspect for damage. Replace as required.
• Friction elements missing or damaged	• Inspect for damage. Replace as required.
• Ball check missing, damaged	• Inspect for damage. Replace as required.

a Can be purchased as a separate item.

Official Technical Publication Ford Motor Company

DIAGNOSIS AND TESTING (Continued)

SHIFT CONCERNS: NO 3-4 SHIFT (AUTOMATIC)

Possible Component	Reference/Action
222 — ELECTRICAL ROUTINE	
Powertrain Control System • Electrical inputs/outputs, vehicle wiring harnesses, PCM, throttle position sensor, VSS, SS1, SS2	• Run On-Board Diagnostics. Refer to 1997 PC/ED[a] for 7.3L DI Diesel Engine or to 1996 PC/ED[a] for all other engines for diagnosis. Perform Pinpoint Test A using Transmission Tester and Cable and Overlay as outlined in this section. Repair/replace as required. Clear codes, road test and rerun On-Board Diagnostics.
322 — HYDRAULIC/MECHANICAL ROUTINE	
Main Controls	
• Bolts not tightened to specification	• Retighten bolts to specification.
• Gaskets damaged or misaligned	• Inspect for damage and replace.
• SS1, SS2 failure to operate in a normal manner	• Refer to Electrical Routine No. 222.
• Overdrive accumulator regulator valve and spring, 3-4 shift valve and spring — damaged, stuck, misassembled, missing	• Inspect for damage. Repair/replace as required.
• Improper components used in rebuild	• Verify that proper components were used in the rebuild.
Overdrive Clutch Assembly	
• Assembly	• Air check clutch assembly as outlined in this section.
• Clutch plates burnt, missing	• Inspect for damage. Replace as required.
• Cylinder damaged	• Inspect for damage. Replace as required.
• Feedbolts loose, missing, leaking, seals damaged	• Install new feedbolts and tighten to specifications.
• Cylinder check ball missing	• Inspect for damage. Replace as required.
Overdrive One-Way Clutch Assembly	
• Damaged	• Inspect for damage. Replace as required.
Overdrive Planet Assembly	
• Damaged	• Inspect for damage. Replace as required.

a Can be purchased as a separate item.

Official Licensed Product
Ford Motor Company

SHIFT CONCERNS: NO 4-3 SHIFT (AUTOMATIC)

Possible Component	Reference/Action
223 — ELECTRICAL ROUTINE	
Powertrain Control System • Electrical inputs/outputs, vehicle wiring harnesses, PCM, throttle position sensor, VSS, SS2	• Run On-Board Diagnostics. Refer to 1997 PC/ED[a] for 7.3L DI Diesel Engine or to 1996 PC/ED[a] for all other engines for diagnosis. Perform Pinpoint Test A using Transmission Tester and Cable and Overlay as outlined in this section. Repair/replace as required. Clear codes, road test and rerun On-Board Diagnostics.
323 — HYDRAULIC/MECHANICAL ROUTINE	
Main Controls	
• Bolts not tightened to specification	• Retighten bolts to specification.
• Gaskets damaged, misaligned	• Inspect for damage and replace.
• SS2 failure to operate in a normal manner	• Refer to Electrical Routine No. 223.
• BS2, 3-4 shift valve damaged, missing, misassembled, stuck	• Inspect for damage. Repair/replace as required.

a Can be purchased as a separate item.

SHIFT CONCERNS: NO 3-2 SHIFT (AUTOMATIC)

Possible Component	Reference/Action
224 — ELECTRICAL ROUTINE	
Powertrain Control System • Electrical inputs/outputs, vehicle wiring harnesses, PCM, throttle position sensor, VSS, SS1	• Run On-Board Diagnostics. Refer to 1997 PC/ED[a] for 7.3L DI Diesel Engine or to 1996 PC/ED[a] for lal other engines for diagnosis. Perform Pinpoint Tests A and D using Transmission Tester and Cable and Overlay as outlined in this section. Repair/replace as required. Clear codes, road test and rerun On-Board Diagnostics.

(Continued)

DIAGNOSIS AND TESTING (Continued)

SHIFT CONCERNS: NO 3-2 SHIFT (AUTOMATIC) (Cont'd)

Possible Component	Reference/Action
324 — HYDRAULIC/MECHANICAL ROUTINE	
Main Controls	
• Bolts not tightened to specification	• Retighten bolts to specification.
• Gaskets damaged, misaligned	• Inspect for damage and replace.
• SS1 failure to operate in a normal manner	• Refer to Electrical Routine No. 224.
• 3-2 shift valve, stuck, damaged	• Inspect for damage. Repair/replace as required.

a Can be purchased as a separate item.

SHIFT CONCERNS: NO 2-1 SHIFT (AUTOMATIC)

Possible Component	Reference/Action
225 — ELECTRICAL ROUTINE	
Powertrain Control System	
• Electrical inputs/outputs, vehicle wiring harnesses, PCM, throttle position sensor, VSS, SS2	• Run On-Board Diagnostics. Refer to 1997 PC/ED[a] for 7.3L DI Diesel Engine or to 1996 PC/ED[a] for all other engines for diagnosis. Perform Pinpoint Test A using the Transmission Tester and Cable and Overlay as outlined in this section. Repair/replace as required. Clear codes, road test and rerun On-Board Diagnostics.
325 — HYDRAULIC/MECHANICAL ROUTINE	
Main Controls	
• Bolts not tightened to specification	• Retighten bolts to specification.
• Gaskets, separator plate damaged, misaligned	• Inspect for damage and replace.
• SS2 failure to operate in a normal manner	• Refer to Electrical Routine No. 225.
• D2 shift valve damaged, stuck	• Inspect for damage. Repair/replace as required.

a Can be purchased as a separate item.

Official Licensed Reprint
Ford Motor Company

SHIFT CONCERNS: SOFT/SLIPPING 1-2 ONLY (AUTOMATIC)

Possible Component	Reference/Action
226 — ELECTRICAL ROUTINE	
Powertrain Control System	
• Electrical inputs/outputs, vehicle wiring harnesses, PCM	• Run On-Board Diagnostics. Refer to 1997 PC/ED[a] for 7.3L DI Diesel Engines or to 1996 PC/ED[a] for all other engines for diagnosis. Repair/replace as required.
326 — HYDRAULIC/MECHANICAL ROUTINE	
Main Controls	
• Bolts not tightened to specification	• Retighten bolts to specification.
• Gaskets damaged, misaligned	• Inspect for damage and replace.
• Intermediate clutch accumulator regulator valve or plunger, springs — stuck, damaged, missing or misassembled	• Inspect for damage. Repair/replace as required.
• Wrong parts used in rebuild	• Verify that correct parts were used.
Intermediate Clutch Assembly	
• Assembly	• Air check clutch assembly as outlined in this section.
• Seals or piston damaged	• Inspect for damage. Replace as required.
• Friction elements worn, missing, misassembled or damaged	• Inspect for damage. Repair/replace as required.
• Feedbolt torque incorrect, missing	• Inspect and install new feedbolts and tighten to specification.
• Ball check missing, not seating	• Inspect for damage. Repair/replace as required.
• Cylinder assembly outer diameter/case bore damaged	• Inspect for damage. Replace as required.

a Can be purchased as a separate item.

DIAGNOSIS AND TESTING (Continued)

SHIFT CONCERNS: SOFT/SLIPPING 2-3 ONLY (AUTOMATIC)

Possible Component	Reference/Action
227 — ELECTRICAL ROUTINE	
Powertrain Control System	
• Electrical inputs/outputs, vehicle wiring harnesses, PCM	• Run On-Board Diagnostics. Refer to 1997 PC/ED[a] for 7.3L DI Diesel Engine or to 1996 PC/ED[a] for all other engines for diagnosis. Repair/replace as required.
327 — HYDRAULIC/MECHANICAL ROUTINE	
Main Controls	
• Bolts not tightened to specification	• Retighten bolts to specification.
• Gaskets damaged	• Inspect for damage and replace.
• Direct clutch accumulator regulator valve, plungers, springs — stuck, missing, damaged, misassembled	• Inspect for damage. Repair/replace as required.
• Improper parts used in rebuild	• Verify that correct parts were used.
Center Support Assembly	
• Feedbolts missing, not tightened to specification	• Inspect, install new feedbolts and tighten to specification.
• Seal rings damaged	• Inspect for damage. Replace as required.
• Assembly damaged	• Inspect for damage. Replace as required.
• Outside diameter or case bore damaged or leaking	• Inspect for damage. Replace as required.
Direct Clutch Assembly	
• Assembly	• Air check clutch assembly as described in this section.
• Center support hub seals damaged	• Inspect for damage. Replace as required.
• Seals, piston, cylinder damaged	• Inspect for damage. Replace as required.
• Friction elements burnt, missing	• Inspect for damage. Service as required.
• Improper quantity of plates installed	• Inspect for proper quantity. Replace as required.
• Ball check missing, not seating	• Inspect for damage. Repair/replace as required.
• Intermediate brake drum inner diameter damaged	• Inspect for damage. Replace as required.

a Can be purchased as a separate item.

Official Licensed Ford Motor Company

SHIFT CONCERNS: SOFT/SLIPPING 3-4 ONLY (AUTOMATIC)

Possible Component	Reference/Action
228 — ELECTRICAL ROUTINE	
Powertrain Control System	
• Electrical inputs/outputs, vehicle wiring harnesses, PCM	• Run On-Board Diagnostics. Refer to 1997 PC/ED[a] for 7.3L DI Diesel Engine or to 1996 PC/ED[a] for all other engines for diagnosis. Repair/replace as required.
328 — HYDRAULIC/MECHANICAL ROUTINE	
Main Controls	
• Bolts not tightened to specification	• Retighten bolts to specification.
• Gaskets damaged or misaligned	• Inspect for damage and replace.
• Overdrive accumulator regulator valve and spring, overdrive accumulator plunger and springs, damaged, misassembled, stuck, missing	• Inspect for damage. Repair/replace as required.
• Improper parts used in rebuild	• Verify that correct parts were used.
Overdrive Clutch Assembly	
• Assembly	• Air check clutch assembly as outlined in this section.
• Friction elements burnt, missing	• Inspect for damage. Replace as required.
• Cylinder damaged, seals damaged	• Inspect for damage. Replace as required.
• Feedbolts loose, missing, leaking, not tightened to specification	• Install new feedbolts and tighten to specification.
• Cylinder check ball not seating, missing	• Inspect for damage. Repair/replace as required.

a Can be purchased as a separate item.

DIAGNOSIS AND TESTING (Continued)

SHIFT CONCERNS: SOFT/SLIPPING DOWNSHIFTS (AUTOMATIC)

Possible Component	Reference/Action
229 — ELECTRICAL ROUTINE	
Powertrain Control System • Electrical inputs/outputs, vehicle wiring harnesses, PCM	• Run On-Board Diagnostics. Refer to 1997 PC/ED[a] for 7.3L DI Diesel Engine or to 1996 PC/ED[a] for all other engines for diagnosis. Repair/replace as required.
329 — HYDRAULIC/MECHANICAL ROUTINE	
Main Controls	
• Bolts not tightened to specification	• Retighten bolts to specification.
• Gaskets damaged, misaligned	• Inspect for damage and replace.
• CB7 check ball missing, wrong	• Inspect for damage. Replace as required.
• Valve body separator plate damaged	• Inspect for damage. Replace as required.
• Improper parts used in rebuild	• Verify that correct parts were used.

a Can be purchased as a separate item.

SHIFT CONCERNS: HARSH 1-2 SHIFT ONLY (AUTOMATIC)

Possible Component	Reference/Action
232 — ELECTRICAL ROUTINE	
Powertrain Control System • Electrical inputs/outputs, vehicle wiring harnesses, PCM	• Run On-Board Diagnostics. Refer to 1997 PC/ED[a] for 7.3L DI Diesel Engine or to 1996 PC/ED[a] for all other engines for diagnosis. Repair/replace as required.
332 — HYDRAULIC/MECHANICAL ROUTINE	
Main Controls	
• Bolts not tightened to specification	• Retighten bolts to specification.
• Gaskets damaged, misaligned	• Inspect for damage and replace.
• Intermediate clutch accumulator regulator valve or plunger springs — stuck, damaged, missing or misassembled	• Inspect for damage. Repair/replace as required.
• Wrong parts used in rebuild	• Verify that proper parts were used.
Intermediate Clutch Assembly	
• Assembly	• Air check clutch assembly as outlined in this section.
• Seals or piston damaged	• Inspect for damage. Repair as required.
• Friction elements missing or misassembled, damaged or improper quantity of plates installed	• Inspect for damage. Repair/replace as required.

a Can be purchased as a separate item.

SHIFT CONCERNS: HARSH 2-3 SHIFT ONLY (AUTOMATIC)

Possible Component	Reference/Action
233 — ELECTRICAL ROUTINE	
Powertrain Control System • Electrical inputs/outputs, vehicle wiring harnesses, PCM	• Run On-Board Diagnostics. Refer to 1997 PC/ED[a] for 7.3L DI Diesel Engine or to 1996 PC/ED[a] for all other engines for diagnosis. Repair/replace as required.
333 — HYDRAULIC/MECHANICAL ROUTINE	
Main Controls	
• Bolts not tightened to specification	• Retighten bolts to specification.
• Gaskets damaged	• Inspect for damage and replace.
• Direct clutch accumulator regulator valve, plungers, springs stuck, missing, damaged, misassembled	• Inspect for damage. Repair/replace as required.
• Wrong parts used in rebuild	• Verify that proper parts were used.
Center Support Assembly	
• Seal rings damaged	• Inspect for damage. Replace as required.
• Outside diameter or case bore damaged or leaking	• Inspect for damage. Replace as required.

(Continued)

Official Licensed Product Ford Motor Company

DIAGNOSIS AND TESTING (Continued)

SHIFT CONCERNS: HARSH 2-3 SHIFT ONLY (AUTOMATIC) (Cont'd)

Possible Component	Reference/Action
Direct Clutch Assembly	
• Assembly	• Air check clutch assembly as outlined in this section.
• Seals, piston or cylinder damaged	• Inspect for damage. Replace as required.
• Friction elements damaged, missing or improper quantity of plates were installed	• Inspect for damage. Repair/replace as required.

a Can be purchased as a separate item.

SHIFT CONCERNS: HARSH 3-4 SHIFT ONLY (AUTOMATIC)

Possible Component	Reference/Action
234 — ELECTRICAL ROUTINE	
Powertrain Control System	
• Electrical inputs/outputs, vehicle wiring harnesses, PCM	• Run On-Board Diagnostics. Refer to 1997 PC/ED[a] for 7.3L DI Diesel Engine or to 1996 PC/ED[a] for all other engines for diagnosis. Repair/replace as required.
334 — HYDRAULIC/MECHANICAL ROUTINE	
Main Controls	
• Bolts not tightened to specification	• Retighten bolts to specification.
• Gaskets damaged or misaligned	• Inspect for damage and replace.
• Overdrive accumulator regulator valve and spring, overdrive accumulator plunger and springs, stuck, damaged, misassembled, missing	• Inspect for damage. Repair/replace as required.
• Improper parts used in rebuild	• Verify that proper parts were used.
Overdrive Clutch Assembly	
• Assembly	• Air check clutch assembly as outlined in this section.
• Friction elements burnt, missing	• Inspect for damage. Replace as required.
• Cylinder damaged, seals damaged, retaining ring not seated	• Inspect for damage. Repair/replace as required.

a Can be purchased as a separate item.

SHIFT CONCERNS: HARSH 4-3 SHIFT ONLY (AUTOMATIC)

Possible Component	Reference/Action
235 — ELECTRICAL ROUTINE	
Powertrain Control System	
• Electrical inputs/outputs, vehicle wiring harnesses, PCM	• Run On-Board Diagnostics. Refer to 1997 PC/ED[a] for 7.3L DI Diesel Engine or to 1996 PC/ED[a] for all other engines for diagnosis. Repair/replace as required.
335 — HYDRAULIC/MECHANICAL ROUTINE	
Main Controls	
• Bolts not tightened to specification	• Retighten bolts to specification.
• Gaskets damaged, misaligned	• Inspect for damage and replace.
• CB7 check ball missing	• Inspect for damage. Replace as required.
• Separator plate damaged	• Inspect for damage. Replace as required.

a Can be purchased as a separate item.

SHIFT CONCERNS: HARSH 3-2 SHIFT ONLY (AUTOMATIC)

Possible Component	Reference/Action
236 — ELECTRICAL ROUTINE	
Powertrain Control System	
• Electrical inputs/outputs, vehicle wiring harnesses, PCM	• Run On-Board Diagnostics. Refer to 1997 PC/ED[a] for 7.3L DI Diesel Engine or to 1996 PC/ED[a] for all other engines for diagnosis. Repair/replace as required.

(Continued)

DIAGNOSIS AND TESTING (Continued)

SHIFT CONCERNS: HARSH 3-2 SHIFT ONLY (AUTOMATIC) (Cont'd)

Possible Component	Reference/Action
336 — HYDRAULIC/MECHANICAL ROUTINE	
Main Controls	
• Bolts not tightened to specification	• Retighten bolts to specification.
• Gaskets damaged, misaligned	• Inspect for damage and replace.
• CB6 check ball missing	• Inspect for damage. Replace as required.
• Separator plate damaged	• Inspect for damage. Replace as required.

a Can be purchased as a separate item.

SHIFT CONCERNS: HARSH 2-1 SHIFT ONLY (AUTOMATIC)

Possible Component	Reference/Action
237 — ELECTRICAL ROUTINE	
Powertrain Control System	
• Electrical inputs/outputs, vehicle wiring harnesses, PCM	• Run On-Board Diagnostics. Refer to 1997 PC/ED[a] for 7.3L DI Diesel Engine or to 1996 PC/ED[a] for all other engines for diagnosis. Repair/replace as required.
337 — HYDRAULIC/MECHANICAL ROUTINE	
Main Controls	
• Bolts not tightened to specification	• Retighten bolts to specification.
• Gaskets damaged, misaligned	• Inspect for damage and replace.
• CB14 check ball missing	• Inspect for damage. Replace as required.
• Separator plate damaged	• Inspect for damage. Replace as required.

a Can be purchased as a separate item.

TORQUE CONVERTER CLUTCH OPERATION CONCERN: NO APPLY

Possible Component	Reference/Action
240 — ELECTRICAL ROUTINE	
Powertrain Control System	• Perform Torque Converter Clutch Operation Test.
• Electrical inputs/outputs, vehicle wiring harnesses, PCM, TCC solenoid, stoplight switch, throttle position sensor, TFT sensor	• Run On-Board Diagnostics. Refer to 1997 PC/ED[a] for 7.3L DI Diesel Engine or to 1996 PC/ED[a] for all other engines for diagnosis. Perform Torque Converter Engagement Test. Perform Pinpoint Tests B and C using Transmission Tester and Cable and Overlay as outlined in this section. Repair/replace as required. Clear codes, road test and rerun On-Board Diagnostics.
340 — HYDRAULIC/MECHANICAL ROUTINE	
Main Controls	
• Bolts not tightened to specification	• Retighten bolts to specification.
• TCC solenoid or TFT sensor failure to operate in a normal manner	• Refer to Electrical Routine No. 240.
• Gaskets damaged	• Inspect gasket for damage and replace.
Pump Assembly	
• Bolts not tightened to specification	• Retighten bolts to specification.
• Cross leaks, cup plugs missing	• Inspect for porosity/leaks, cup plugs missing, replace pump as required.
• Gaskets damaged	• Inspect and replace gaskets.
• Converter clutch control valve and regulator valve stuck, misassembled, damaged	• Inspect for damage. Replace pump.
Stator Support	
• Teflon® seals damaged, leaking	• Inspect for damage. Replace as required.
Torque Converter Assembly	
• Leakage, friction material damaged, internal seals damaged	• Inspect according to procedures described in this section. Replace as required.

a Can be purchased as a separate item.

Official Licensed Motor Company

DIAGNOSIS AND TESTING (Continued)

TORQUE CONVERTER CLUTCH OPERATION CONCERN: ALWAYS APPLIED/STALLS VEHICLE (SEE NOTE IN NO. 241 BEFORE PROCEEDING)

Possible Component	Reference/Action
241 — ELECTRICAL ROUTINE	
NOTE: Stalls in DRIVE and MANUAL 2 only (MANUAL 1 and REVERSE are OK)	• Go to Hydraulic/Mechanical No. 341. • Perform Torque Converter Clutch Operation Test.
Powertrain Control System • Electrical inputs/outputs, vehicle wiring harnesses, PCM, TCC solenoid	• Run On-Board Diagnostics. Refer to 1997 PC/ED[a] for 7.3L DI Diesel Engine or to 1996 PC/ED[a] for all other engines for diagnosis. Perform Torque Converter Engagement Test. Perform Pinpoint Test C using Transmission Tester and Cable and Overlay as outlined in this section. Repair/replace as required. Clear codes, road test and rerun On-Board Diagnostics.
341 — HYDRAULIC/MECHANICAL ROUTINE	
Improper Pressures • Low line pressures	• Check line pressure at line tap. Perform Line Pressure and Stall Speed Tests. Refer to Pressure Chart No. 401 for specification.
Main Controls • Bolts not tightened to specification • Torque converter clutch solenoid failure to operate in a normal manner • Gaskets damaged	• Retighten bolts to specification. • Refer to Electrical Routine No. 241. • Inspect for damage and replace.
Pump Assembly • Bolts not tightened to specification • Converter clutch control valve misassembled, stuck, damaged • Porosity/cross leaks • Gaskets damaged • Excessive pump gear end clearance	• Retighten bolts to specification. • Inspect for damage. Repair/replace as required. • Inspect for porosity/leaks, valve damaged, replace pump as required. • Inspect for damage and replace. • Perform pump gear end clearance check as outlined in this section.
Torque Converter Assembly • End play (none) • Piston plate damaged/stuck to cover	• Perform End Play Check as outlined in this section. • Inspect for damage. Repair/replace as required. • Inspect transmission cooling system for proper lube flow. Follow the procedures in this section.

a Can be purchased as a separate item.

TORQUE CONVERTER CLUTCH OPERATION CONCERN: CYCLING/SHUDDER/CHATTER

Possible Component	Reference/Action
242 — ELECTRICAL ROUTINE	
Powertrain Control System • Electrical inputs/outputs, vehicle harnesses, PCM, TCC solenoid, TR sensor, stoplight switch, throttle position sensor	• Refer to 1997 PC/ED[a] for 7.3L DI Diesel Engine or to 1996 PC/ED[a] for all other engines for diagnosis. Perform Torque Converter Engagement Test. Perform Pinpoint Tests C and D using Transmission Tester, Cable and Overlay and Transmission Range (TR) Sensor Cable B (MLPS Manual Lever Position Sensor Cable) as outlined in this section. Clear codes, road test and rerun On-Board Diagnostics.
Speed Control Equipped Vehicles	**NOTE:** Refer to Routine No. 212 before you proceed to No. 342.
342 — HYDRAULIC/MECHANICAL ROUTINE	
Fluid Condition	• Inspect fluid condition. If burnt or contaminated, drain fluid from the transmission assembly and converter assembly. Check control attaching bolts for proper torque. Retighten as required. Record and erase On-Board Diagnostics codes. Bring vehicle to normal operating temperature. Perform Transmission Drive Cycle as described in this section. Perform On-Board Diagnostics. If condition still exists, continue diagnosis.
Main Controls • Bolts not tightened to specification • Torque converter clutch solenoid failure to operate in a normal manner	• Retighten bolts to specification. • Refer to Electrical Routine No. 242.

(Continued)

DIAGNOSIS AND TESTING (Continued)

TORQUE CONVERTER CLUTCH OPERATION CONCERN: CYCLING/SHUDDER/CHATTER (Cont'd)

Possible Component	Reference/Action
• Gaskets damaged	• Inspect for damage and replace.
Pump Assembly	
• Bolts not tightened to specification	• Retighten bolts to specification.
• Cross leaks	• Inspect for porosity/leaks, valve damage; replace pump as required.
• Gaskets damaged	• Inspect for damage and replace.
• Converter clutch regulator valve damaged	• Inspect for damage. Replace as required.
Stator Support	
• Teflon® seal on nose of stator damaged, cut, leaking	• Inspect for damage. Replace as required.
Torque Converter Assembly	
• End play (excessive), internal leakage	• Inspect according to procedures outlined in this section. Repair as required.

a Can be purchased as a separate item.

OTHER CONCERNS: SHIFT LEVER EFFORTS HIGH

Possible Component	Reference/Action
251 — ELECTRICAL ROUTINE	
• No electrical concerns	
351 — HYDRAULIC/MECHANICAL ROUTINE	
Shift Linkage (Internal/External) or Cable	
• Damaged, misadjusted	• Inspect and service as required. Verify linkage adjustment. After linkage repair/adjustment, verify that the TR sensor is properly adjusted.
Manual Control Lever	
• Retaining pin damaged, nut loose (inner or outer), detent spring — bent/damaged, park mechanism damaged	• Inspect for damage. Repair/replace as required. Inspect locking nuts for proper torque, retighten to proper specification as required.
Main Controls	
• Manual valve sticking	• Inspect for damage. Repair/replace as required.
• Bolts not tightened to specification	• Retighten bolts to specification.

Official Licensed Product

OTHER CONCERNS: EXTERNAL LEAKS

Possible Component	Reference/Action
252 — ELECTRICAL ROUTINE	
• No electrical concerns	
352 — HYDRAULIC/MECHANICAL ROUTINE	
Engine Rear Seal	• Locate source and repair/replace as required.
Seals/Gaskets	
• Torque converter assembly, pump, transmission fluid pan, transmission connector, extension housing — gasket seal, manual lever, fluid level indicator, fluid filler tube, pump bolts	• Locate source and repair/replace as required.
Other	
• Cooler fitting, pressure taps, converter drain plug, band anchor pins, cooler tubes, case porosity, case cracked	• Locate source and repair/replace as required.
• Vent blocked or damaged	• Check case vent assembly for damage or blockage. Service as required.
• Overfilled transmission	• Check level and adjust as required.
• Overheating	• Refer to routines No. 257/357.
• Pump assembly	• Locate source and service as required.

DIAGNOSIS AND TESTING (Continued)

OTHER CONCERNS: POOR VEHICLE PERFORMANCE

Possible Component	Reference/Action
253 — ELECTRICAL ROUTINE	
Powertrain Control System • Electrical inputs/outputs, vehicle wiring harnesses, PCM, other engine related items, TCC solenoid, throttle position sensor, TR sensor, TFT sensor	• Perform Torque Converter Clutch Operation Test. • Run On-Board Diagnostics. Refer to 1997 PC/ED[a] for 7.3L DI Diesel Engine or to 1996 PC/ED[a] for all other engines for diagnosis. Perform Pinpoint Tests B, C and D using Transmission Tester, Cable and Overlay and Transmission Range (TR) Sensor Cable B (MLPS Manual Lever Position Sensor Cable) as outlined in this section. Repair/replace as required. Clear codes, road test and rerun On-Board Diagnostics.
353 — HYDRAULIC/MECHANICAL ROUTINE	
Shift Linkage (Internal/External) or Cable • Damaged, misadjusted	• Inspect for damage. Repair as required. Verify linkage adjustment. After linkage repair/adjustment, verify that the TR sensor is properly adjusted.
Shift Scheduling • Improper	• Perform Shift Point Road Test procedure as described in this section. • Go to the appropriate diagnostic routines for shift concerns No. 210-211.
Engagements • Improper gear selection	• Go to the appropriate diagnostic routines for shift concerns No. 215/315.
Converter Clutch Always Applied	• Go to routine No. 341.
Converter One-Way Clutch • Damaged	• Go to Torque Converter Checks in this section.

a Can be purchased as a separate item.

Official Licensed Product

OTHER CONCERNS: NOISE/VIBRATION — FORWARD OR REVERSE

Possible Component	Reference/Action
254 — ELECTRICAL ROUTINE	
• No electrical concerns	
354 — HYDRAULIC/MECHANICAL ROUTINE	
For Noises/Vibrations that change with engine speed: • Torque converter components • Fluid level (low) pump cavitation • Pump assembly • Engine drive accessories • Transmission oil cooler lines grounding out • Flywheel • Fluid filler tube grounding out	• Locate source of disturbance. Repair/replace as required.

(Continued)

DIAGNOSIS AND TESTING (Continued)

OTHER CONCERNS: NOISE/VIBRATION — FORWARD OR REVERSE (Cont'd)

Possible Component	Reference/Action
For Noise/Vibrations that change with vehicle speed: • Engine mounts — Loose, damaged • Driveline concerns • U-joints • Rear axle assembly • Suspension • Modifications/misalignment • First gear — one-way clutch, gear set — friction elements — torque converter assembly • Second gear — intermediate OWC — friction elements — torque converter assembly • Third gear — one-way clutch — torque converter assembly — friction elements • Fourth gear — one-way clutch — gear set — friction elements — torque converter assembly • REVERSE — gear set — friction elements — torque converter assembly • Shaft spline fit • Slip yoke, park gear	• Locate source of disturbance. Repair/replace as required. • For specific shifts or torque converter concern, refer to appropriate routines: — No Shift 1-2, Routine 320 — No Shift 2-3, Routine 321 — No Shift 3-4, Routine 322 — No Shift 4-3, Routine 323 — No Shift 3-2, Routine 324 — No Shift 2-1, Routine 325 — No Converter Cycling, Routine 242/342
Other Noises/Vibrations: • Main controls • Valve resonance • Shift cable • Vibration, grounding — transmission fluid cooler lines or fluid filler tube	• Locate source of disturbance. Repair/replace as required.

Official Licensed Product
Ford Motor Company

OTHER CONCERNS: ENGINE WILL NOT CRANK

Possible Component	Reference/Action
255 — ELECTRICAL ROUTINE	
Powertrain Control System • Electrical inputs/outputs, vehicle wiring harnesses, PCM, TR sensor	• Run On-Board Diagnostics. Refer to 1997 PC/ED[a] for 7.3L DI Diesel Engine or to 1996 PC/ED[a] for all other engines for diagnosis. Perform Pinpoint Test D using Transmission Tester, Cable and Overlay and Transmission Range (TR) Sensor Cable B (MLPS Manual Lever Position Sensor Cable) as outlined in this section. Repair/replace as required. Clear codes, and rerun On-Board Diagnostics.
355 — HYDRAULIC/MECHANICAL ROUTINE	
Shift Linkage (Internal/External) or Cable/TR Sensor • Damaged, misadjusted	• Inspect and service as required. Verify linkage adjustment. After linkage repair/adjustment, verify that the TR sensor is properly adjusted
Pump Assembly • Seized	• Refer to Pump Assembly in the Disassembly portion of this section. Inspect for damage. Repair/replace as required.
Flywheel • Damaged	• Inspect for damage. Replace as required.

a Can be purchased as a separate item.

DIAGNOSIS AND TESTING (Continued)

OTHER CONCERNS: NO PARK RANGE

Possible Component	Reference/Action
256 — ELECTRICAL ROUTINE	
• No electrical concerns	
356 — HYDRAULIC/MECHANICAL ROUTINE	
Shift Linkage (Internal/External) or Cable • Damaged, misadjusted	• Inspect for damage. Repair as required. Verify linkage adjustment. After linkage repair/adjustment, verify that the TR sensor is properly adjusted.
Park Mechanism • Park gear, parking pawl, parking pawl return spring, park guide plate, parking pawl shaft, parking pawl actuating rod, inner and outer manual control lever, inner manual valve detent lever, damaged, misassembled	• Inspect for damage. Repair/replace as required.
4x4 Applications • Transfer case and linkage damaged	• Refer to service manual for transfer case and linkage diagnosis.
Super Duty Only • Parking brake drum damaged	• Inspect for damage. Replace as required.

OTHER CONCERNS: TRANSMISSION OVERHEATING

Possible Component	Reference/Action
257 — ELECTRICAL ROUTINE	
Powertrain Control System • Electrical inputs/outputs, vehicle wiring harnesses, PCM, TCC solenoid	• Run On-Board Diagnostics. Refer to 1997 PC/ED[a] for 7.3L DI Diesel Engine or to 1996 PC/ED[a] for all other engines for diagnosis. Perform Pinpoint Test C using Transmission Tester and Cable and Overlay as outlined in this section. Repair/replace as required. Clear codes, road test and rerun On-Board Diagnostics.
357 — HYDRAULIC/MECHANICAL ROUTINE	
Excessive Vehicle or Towing Loads, Severe Vehicle Usage	• Refer to the vehicle specification manual for load and GVW/GCW information. Refer to owner guide. • NOTE: If auxiliary cooler is desired, use only Ford original factory equipment installed to factory specifications.
Fluid • Improper level • Condition	• Adjust fluid to proper level. Inspect according to instructions under Fluid Condition Check.
Transmission Cooling System • Damaged, blocked, restricted, or improperly installed	• Perform Transmission Fluid Cooler Flow Test. • Inspect for damage, restrictions. Repair/replace as required.
Vehicle Concerns Causing Engine Overheating	• Refer to Engine Condition and Cause charts.
Torque Converter Clutch • Not engaging	• See Routine No. 240/340.

a Can be purchased as a separate item.

OTHER CONCERNS: NO ENGINE BRAKING IN MANUAL 2 POSITION ONLY

Possible Component	Reference/Action
258 — ELECTRICAL ROUTINE	
• No electrical concerns	
358 — HYDRAULIC/MECHANICAL ROUTINE	
Main Controls • Bolts not tightened to specification • BS1, BS6, CB1 check balls missing, seat damaged • Valve body separator plate damaged • 4-3-2 timing valve, D2 valve, 2-3 shift valve, coast clutch shift valve, 1-2 manual transition valve, 3-4 shift valve damaged, stuck, misassembled	• Retighten bolts to specification. • Inspect for damage. Replace as required. • Inspect for damage. Replace as required. • Inspect for damage. Repair/replace as required.

(Continued)

Official Licensed Product Ford Motor Company

DIAGNOSIS AND TESTING (Continued)

OTHER CONCERNS: NO ENGINE BRAKING IN MANUAL 2 POSITION ONLY (Cont'd)

Possible Component	Reference/Action
Coast Clutch Assembly	
• Assembly	• Air check clutch assembly as outlined in this section.
• Seals or piston damaged	• Inspect for damage. Replace as required.
• Stator support damaged or holes blocked, seal rings damaged	• Inspect for damage. Repair/replace as required.
• Cylinder hub damaged or holes blocked	• Inspect for damage. Repair/replace as required.
• Friction elements damaged, burnt	• Inspect for damage. Replace as required.
Intermediate Servo/Band Assembly	
• Servo piston or bore damaged	• Inspect for damage. Replace as required.
• Band or drum burnt, damaged	• Inspect for damage. Replace as required.

OTHER CONCERNS: NO ENGINE BRAKING IN MANUAL 1 POSITION ONLY

Possible Component	Reference/Action
259 — ELECTRICAL ROUTINE	
• No electrical concerns	
359 — HYDRAULIC/MECHANICAL ROUTINE	
Main Controls	
• Bolts not tightened to specification	• Retighten bolts to specification.
• Gaskets damaged	• Inspect for damage and replace.
• 3-4 shift valve, low reverse clutch modulator valve, D2 valve, 4-3-2 timing valve, 2-3 shift valve, coast clutch shift valve damaged, misassembled, stuck	• Inspect for damage. Repair/replace as required.
• BS1, CB1 ball damaged, missing	• Inspect for damage. Replace as required.
• Valve body separator plate damaged	• Inspect for damage. Replace as required.
• Reinforcing plate bolts loose	• Retighten bolts to specification.
Coast Clutch Assembly	
• Assembly	• Air check clutch assembly as described in this section.
• Seal or piston damaged	• Inspect for damage. Replace as required.
• Stator support damaged or holes blocked, seal rings damaged	• Inspect for damage. Replace as required.
• Cylinder hub damaged or holes blocked	• Inspect for damage. Repair/replace as required.
• Friction elements damaged, burnt	• Inspect for damage. Replace as required.
Low One-Way Clutch Assembly	
• Assembly	• Air check clutch assembly as described in this section.
• Seals or piston damaged	• Inspect for damage. Replace as required.
• Friction elements damaged, worn	• Inspect for damage. Replace as required.
• Sealing area in case damaged	• Inspect for damage. Replace case.

OTHER CONCERNS: NO ENGINE BRAKING WITH OVERDRIVE CANCELLED (MANUAL 1ST AND MANUAL 2ND HAVE ENGINE BRAKING)

Possible Component	Reference/Action
260 — ELECTRICAL ROUTINE	
Powertrain Control System	
• Electrical inputs/outputs, vehicle wiring harnesses, PCM, CCS	• Run On-Board Diagnostics. Refer to 1997 PC/ED[a] for 7.3L DI Diesel Engine or to 1996 PC/ED[a] for all other engines for diagnosis. Perform Pinpoint Test G using Transmission Tester and Cable and Overlay as outlined in this section. Repair/replace as required. Clear codes, road test and rerun On-Board Diagnostics.
360 — HYDRAULIC/MECHANICAL ROUTINE	
Main Controls	
• Bolts not tightened to specification	• Retighten bolts to specification.
• Gaskets damaged	• Inspect for damage and replace.
• CCS damaged, stuck	• Refer to electrical routine No. 260.
• BS3 check balls missing or valve body separator plate seat damaged	• Inspect for damage. Replace as required.
• 3-4 shift valve stuck, damaged or misassembled	• Inspect for damage. Repair/replace as required.

a Can be purchased as a separate item.

Official Licensed Product Ford Motor Company

DIAGNOSIS AND TESTING (Continued)

OTHER CONCERNS: FLUID VENTING/FOAMING

Possible Component	Reference/Action
261 — ELECTRICAL ROUTINE	
• No electrical concerns	
361 — HYDRAULIC/MECHANICAL ROUTINE	
• Case vent assembly blocked or damaged	• Check case vent assembly for damage or blockage. Repair/replace as required.
• Overfilled transmission	• Check level and adjust as required.
• Fluid contaminated (coolant, water)	• Check for contamination, locate source of contamination. Repair as required.
• Overheating	• Refer to Routine No. 257/357.
• Filter assembly and seal damaged or misassembled	• Inspect filter assembly and seal for damage. Replace as required.
• Pump to case gasket damaged, misaligned	• Inspect for damage and replace.

REFERENCE: PRESSURE CHART NO. 401

Line Pressure	Idle		Stall	
Gear	kPa	psi	kPa	psi
P/N	379-448	50-65	—	—
R	483-690	70-100	1689-2000	245-290
D, 2	345-448	50-65	1138-1276	165-185
1	483-690	70-100	1207-1448	175-210

CAUTION: Transmission Tester MUST BE REMOVED from the transmission and the vehicle harness reinstalled to verify these pressures.

Official Licensed Product Ford Motor Company

Reference: Check Ball Chart No. 501

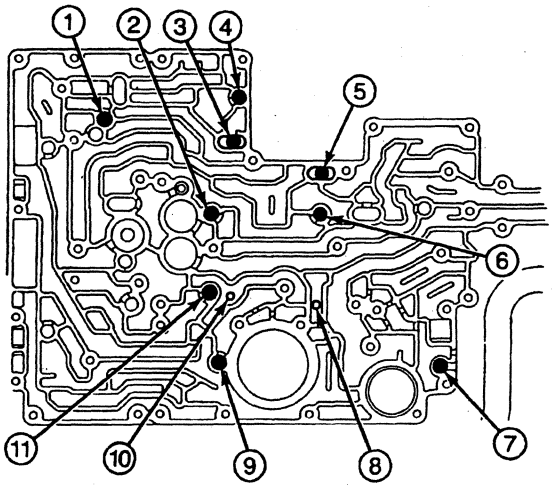

DD0754-A

Item	Part Number	Description
1	E7DP-7E195-AA	Check Ball 7, Viton 8.0 mm (5/16-Inch)
2	E7DP-7E195-AA	Check Ball 1, Viton 8.0 mm (5/16-Inch)

(Continued)

Item	Part Number	Description
3	E7DP-7E195-AA	BS-3, Viton 8.0 mm (5/16-Inch)
4	E7DP-7E195-AA	Check Ball 8, Viton 8.0 mm (5/16-Inch)
5	E7DP-7E195-AA	BS-1, Viton 8.0 mm (5/16-Inch)
6	E7DP-7E195-AA	Check Ball 6, Viton 8.0 mm (5/16-Inch)
7	353078-S	EPC 6.35 mm (0.25-Inch) Steel Ball with Spring
8	—	Air Bleed S2
9	E7DP-7E195-AA	Check Ball 9, Viton 8.0 mm (5/16-Inch)
10	—	Air Bleed S1
11	E7DP-7E195-AA	Check Ball 14, Viton 8.0 mm (5/16-Inch)

DIAGNOSIS AND TESTING (Continued)

REFERENCE: BAND/CLUTCH APPLICATION CHART NO. 601

Gear	Friction Elements							One-Way Clutches					
								Overdrive		Intermediate		Low	
	Intermediate Band	Coast	Overdrive	Intermediate	Direct	Forward	Reverse	Drive	Coast	Drive	Coast	Drive	Coast
D first	—	[ab]	—	—	—	apply	—	HOLD	[ab]	—	—	HOLD	O/R
D second	—	[ab]	—	apply	—	apply	—	HOLD	[ab]	HOLD	O/R	O/R	O/R
D third	—	[ab]	—	apply	apply	apply	—	HOLD	[ab]	O/R	O/R	O/R	O/R
D fourth	—	—	apply	apply	apply	apply	—	O/R	O/R	O/R	O/R	O/R	O/R
1	—	apply	—	—	—	apply	apply	HOLD	CC	—	—	HOLD	—
2	apply	apply	—	apply	—	apply	—	HOLD	CC	HOLD	BA	O/R	O/R
reverse	—	apply	—	—	apply	—	apply	HOLD	CC	O/R	O/R	—	—

a In D range with the transmission control switch pressed, the coast clutch is applied and the O/D one-way clutch is bypassed.
b On certain applications in D range, the coast clutch solenoid and clutch is controlled by the PCM.

O/D — Overdrive
O/R — Overrunning
CC — Coast Friction Clutch Applied
BA — Band Applied

Official Licensed Product

REFERENCE: SOLENOID OPERATION CHART NO. 701

Transmission Range Selector Lever Position	PCM Commanded Gear	SS1	SS2	TCCS	CCS
P/R/N	1	ON	OFF	OFF	OFF
D	1	ON	OFF	[a]	[a]
D	2	ON	ON	[a]	[a]
D	3	OFF	ON	[a]	[a]
D	4	OFF	OFF	[a]	OFF
D Cancel	First Through Third Gear Only, SS1, SS2, and TCC Same As Overdrive, CCS Always On.				
MANUAL 2	2	[a]	[a]	[a]	ON
MANUAL 1	2	OFF	OFF	OFF	ON
MANUAL 1	1	ON	OFF	OFF	ON

a Powertrain control module controlled.

IN-VEHICLE SERVICE

Transmission Fluid Drain and Refill

CAUTION: Use only Motorcraft MERCON® Multi-Purpose Automatic Transmission Fluid XT-2-QDX or MERCON® equivalent. The use of any other fluids can result in the transmission failing to operate in a normal manner or failure.

Check and adjust transmission fluid to specified levels when performing other maintenance.

CAUTION: When changing the transmission fluid and filter and seal assembly, the torque converter, transmission cooler and cooler lines must be thoroughly flushed to remove any contamination.

Change the transmission fluid and filter and seal assembly if a major repair, such as a clutch, band, bearing, etc., is required in the transmission.

The transmission fluid and filter and seal assembly should be changed every 33795 km (21,000 miles) under any of the following conditions:

- **sustained high-speed driving during hot weather (at or above 32°C [90°F])**
- **towing a trailer for distances over 1609 km (1,000 miles)**
- **accumulating 8047 km (5,000 miles) or more per month**
- **continuous running operation, such as a delivery vehicle**

1. Loosen, then remove the transmission fluid pan retaining bolts to drain fluid.
2. **CAUTION: Cork gaskets and elastomeric gaskets are not interchangeable. If you remove a cork gasket, replace it with a cork gasket. If you remove an elastomeric gasket, clean, inspect and reuse unless gasket is damaged. Be careful not to cut or bend elastomeric gasket.**

   Remove, but do not discard, reusable elastomeric transmission pan gasket.

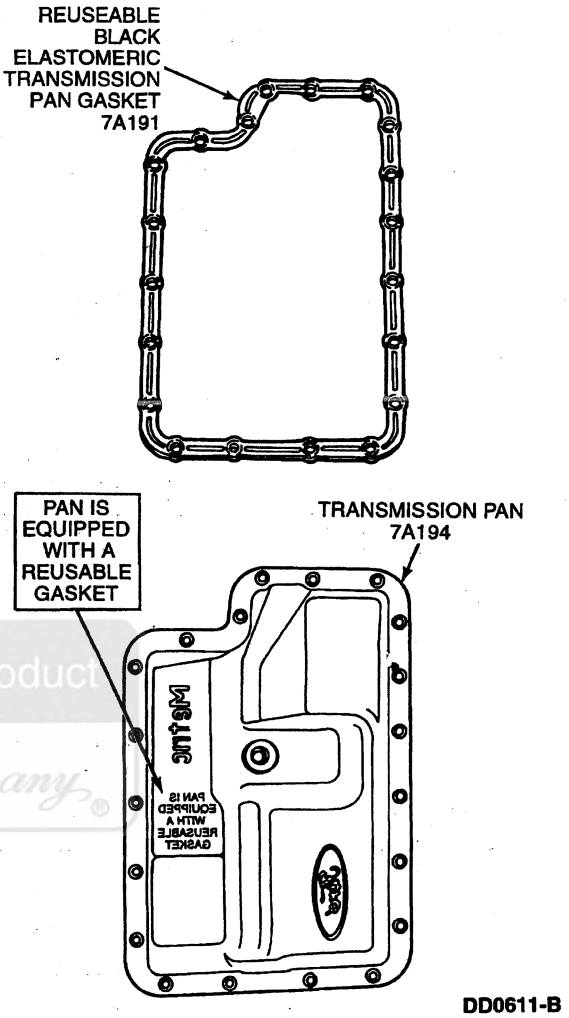

3. Perform required internal repair and cleaning.
4. Drain the torque converter (7902) by removing drain plug.
5. Thoroughly flush torque converter, cooler lines and transmission in-tank radiator cooler and auxiliary cooler (if so equipped).
6. After torque converter has been drained, install new torque converter drain plug and tighten to 24-27 N·m (18-20 lb-ft).

Official Licensed Product Ford Motor Company

IN-VEHICLE SERVICE (Continued)

7. **CAUTION: Mixing 4x4 and 4x2 transmission fluid filters and transmission pan assembly components can cause transmission damage.**

   Select the appropriate style filter assembly and transmission pan for either 4x2 or 4x4 models.

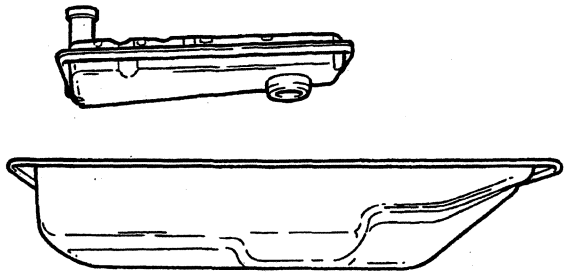

4x2 STYLE TRANSMISSION FLUID FILTER AND PAN

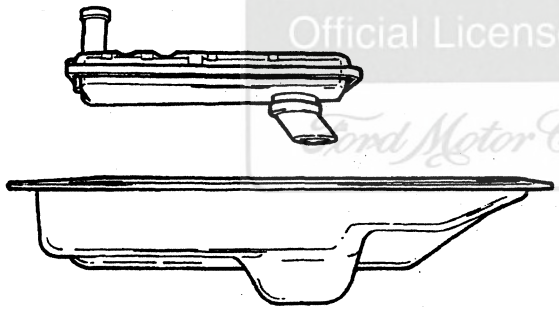

4x4 STYLE TRANSMISSION FLUID FILTER AND PAN

D16541-A

8. NOTE: Prior to installation, lightly lubricate the seal with clean Motorcraft MERCON® Multi-Purpose Automatic Transmission Fluid XT-2-QDX or MERCON® equivalent.

   Replace fluid filter and seal assembly.

9. **CAUTION: Cork gaskets and elastomeric gaskets are not interchangeable. If you remove a cork gasket, replace it with a cork gasket. If you remove an elastomeric gasket, clean, inspect and reuse unless gasket is damaged. Be careful not to cut or bend elastomeric gasket.**

   Clean, inspect and reuse elastomeric gasket unless damaged.

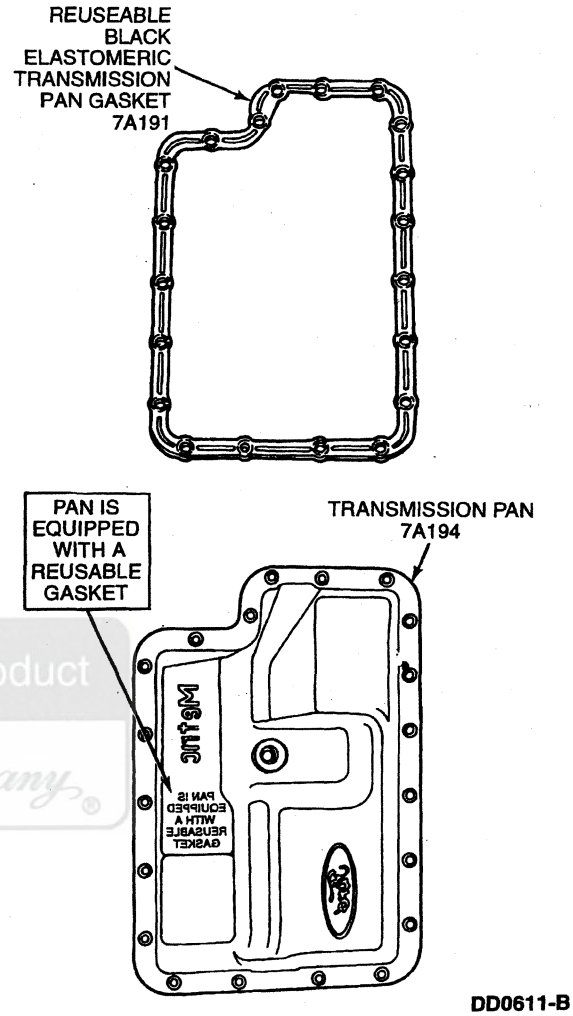

DD0611-B

10. Install cleaned pan, gasket and retaining bolts. Tighten retaining bolts to 14-16 N·m (10-12 lb-ft).

11. **CAUTION: Use only Motorcraft MERCON® Multi-Purpose Automatic Transmission Fluid XT-2-QDX or MERCON® equivalent. The use of any other fluids can result in the transmission failing to operate in a normal manner or failure.**

    Add 6.2 liters (6.5 quarts) of MERCON® service fluid to the transmission (7003) through the fluid filler tube.

12. Start engine. Move the transmission range selector lever through all gear ranges, checking for engagements.

13. Check and adjust the transmission fluid level in 0.24-liter (0.5-pint) increments to the proper level (cross-hatched or hot marked area of the fluid level indicator (7A020) at normal operating temperatures).

Official Licensed Product Ford Motor Company

IN-VEHICLE SERVICE (Continued)

Shift Linkage Check

Refer to Section 07-05.

Main Control Valve Body

NOTE: If the transmission (7003) has been disassembled to replace worn or damaged parts and the valves in the main control valve body (7A100) stick repeatedly from foreign material, the torque converter (7902) must be removed and cleaned by using a mechanically agitated cleaner, such as Rotunda Torque Converter / Oil Cooler Cleaner 014-00028 or equivalent.

Removal

1. Remove transmission fluid level indicator (7A020).
2. Raise and support vehicle.
3. Loosen the two transmission heat shield bolts using an 8 mm socket. Remove the transmission heat shield (7A434).
4. **CAUTION: Do not attempt to pry tab with pry bar or screwdriver. Remove the transmission heat shield from the transmission before attempting to remove the connector.**

   NOTE: Check electrical connectors for terminal condition, corrosion and contamination. Repair or replace as required.

   Disconnect solenoid body assembly harness connector by pushing on the center tab and pulling upward on the harness connector.

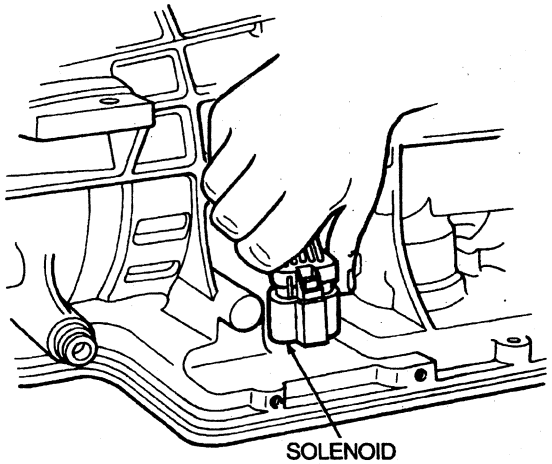

DD0755-A

5. Position a drain pan under transmission.
6. Remove all transmission pan bolts, except the front ones, using a 10 mm socket. Only loosen the front bolts at this time.

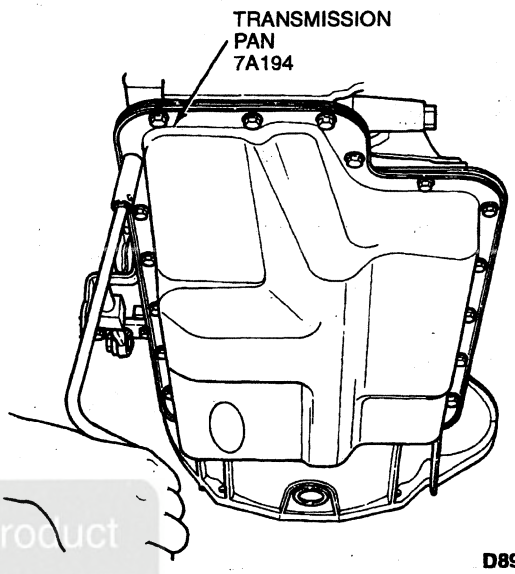

D8954-E

7. Lower the rear of the transmission pan down and allow the fluid to drain.
8. Remove front pan bolts and remove transmission pan.

Licensed Product
Ford Motor Company

IN-VEHICLE SERVICE (Continued)

9. **CAUTION: Cork gaskets and elastomeric gaskets are not interchangeable. If you remove a cork gasket, replace it with a cork gasket. If you remove an elastomeric gasket, clean, inspect and reuse unless gasket is damaged. Be careful not to cut or bend elastomeric gasket.**

   Remove, but do not discard, reusable elastomeric transmission pan gasket.

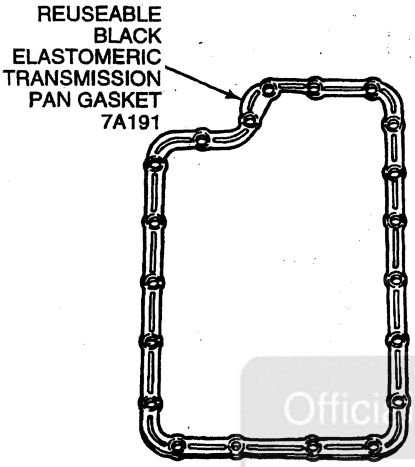

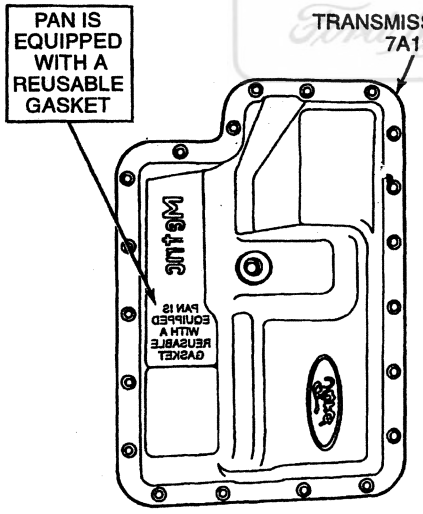

DD0611-B

10. **CAUTION: Use care not to scratch or damage aluminum pump bore.**

    Remove filter assembly and seal by carefully pulling and rotating the filter as necessary. If seal remains in bore, carefully remove using a small screwdriver. Discard filter assembly and seal.

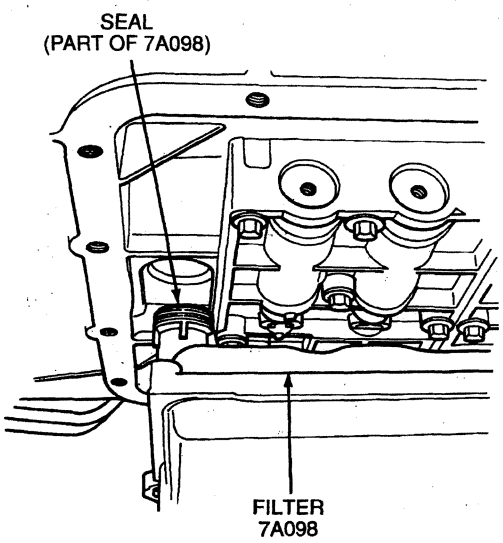

DD0756-A

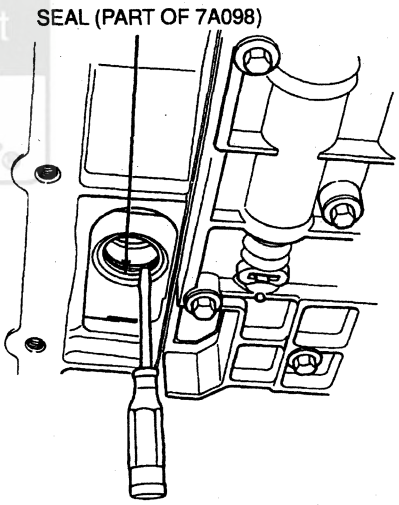

D9216-C

Official Licensed Product Ford Motor Company

IN-VEHICLE SERVICE (Continued)

11. Remove 11 accumulator body bolts using an 8 mm socket and two nuts using a 10 mm socket. Remove accumulator body assembly.

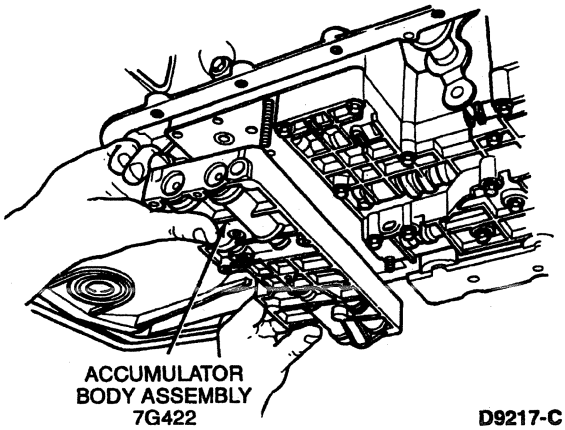

D9217-C

12. If valve body separator plate (7A008) is to be left on the transmission, remove and install one of the reinforcing plate bolts into any of the case threaded bolt holes on the opposite end of the separator plate. This will prevent the valve body separator plate from sagging and displacing check balls.
13. NOTE: Do not remove the two bolts as shown in the following illustration. This will keep the upper and lower main control valve bodies attached as an assembly.

    Remove 14 main control valve body bolts using an 8 mm socket and two nuts using a 10 mm socket. Remove main control valve body.

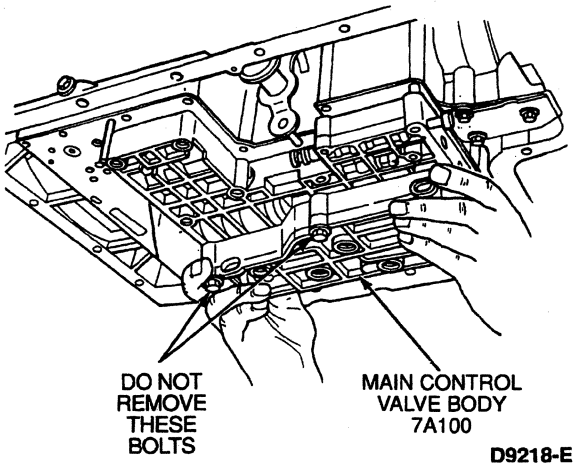

D9218-E

14. Remove nine solenoid body assembly bolts using a T30 Torx® bit and one nut using a 10 mm socket. Push down on solenoid body assembly receptacle to remove solenoid body assembly.

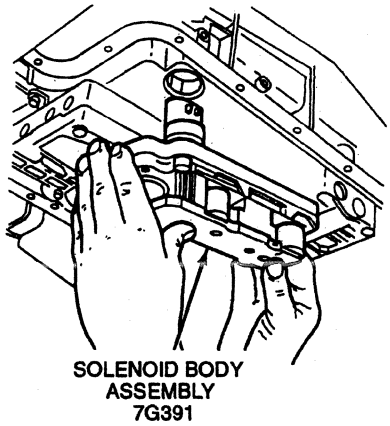

D9219-D

15. Remove solenoid screen assembly by rotating and pulling it out.

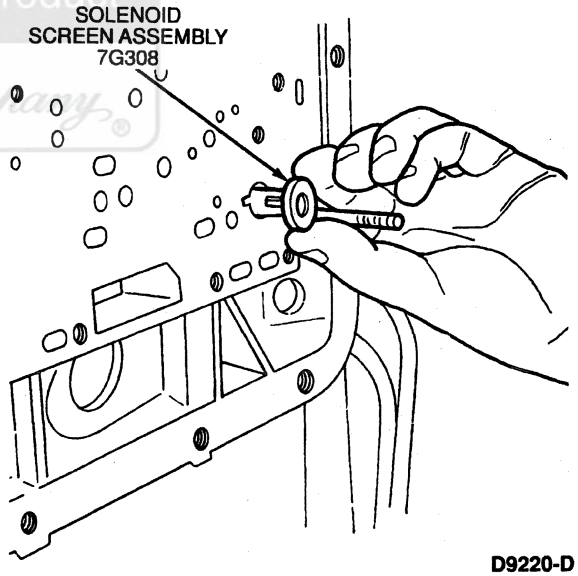

D9220-D

Ford Motor Company Proprietary Product

IN-VEHICLE SERVICE (Continued)

16. Remove separator plate reinforcing plate bolts using an 8 mm socket. Remove plate.

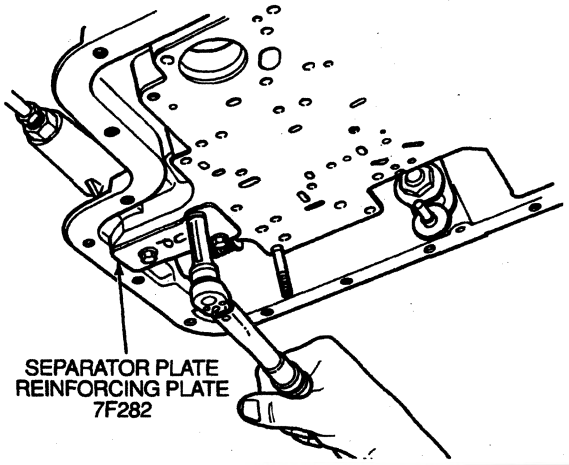

D9221-C

17. Lower valve body separator plate and gaskets carefully so that rubber check balls, steel EPC check ball and spring are retained.

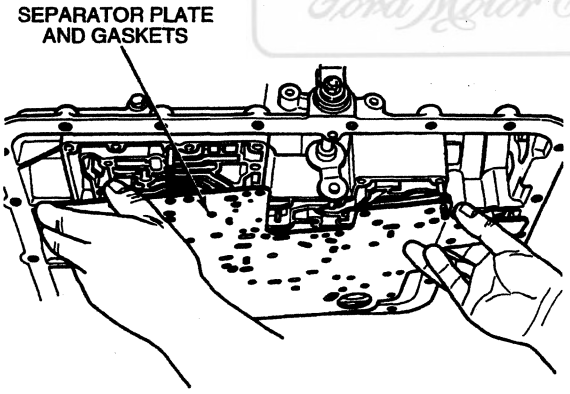

DD0757-A

Installation

1. Apply a light film of petroleum jelly to valve body separator plate to hold new valve body separator plate gasket.

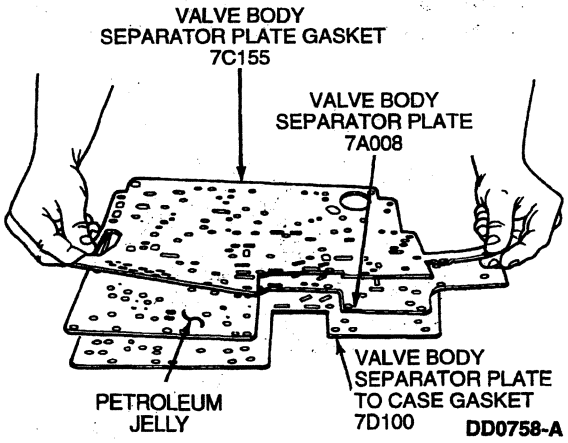

DD0758-A

2. Apply light film of petroleum jelly to valve body separator plate to hold new valve body separator plate to case gasket on valve body separator plate.
3. Place a small amount of petroleum jelly on each of the eight rubber check balls and the steel EPC check ball. Position balls on the valve body separator plate as shown.

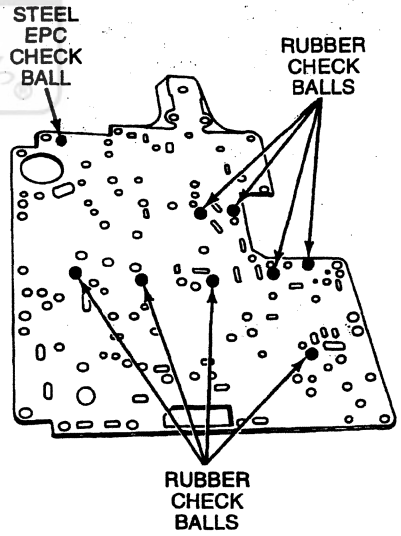

DD0621-B

Ford Motor Company

IN-VEHICLE SERVICE (Continued)

4. Place a daub of petroleum jelly on the EPC check ball spring and install it into the location shown.

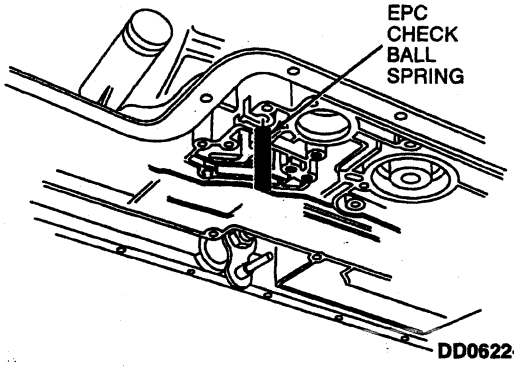

DD0622-A

5. Position valve body separator plate and gaskets to case (7005) carefully, to retain check balls.

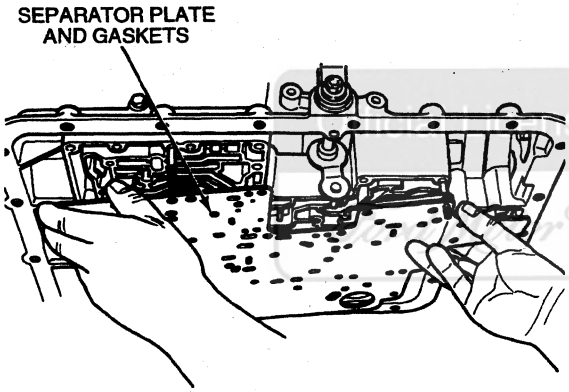

DD0757-A

6. Install separator plate reinforcing plate using three separator plate reinforcing plate bolts. Tighten to 9-11 N·m (80-100 lb-in).

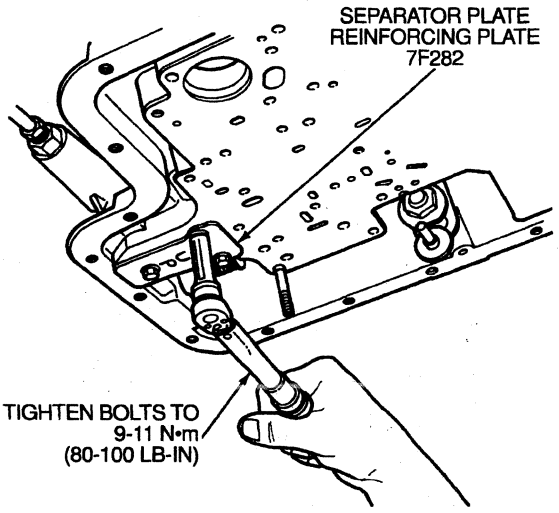

D9227-C

a. Check location of rubber check balls and steel EPC check ball.

b. If separator plate reinforcing plate bolt has been used to retain valve body separator plate to case, do not reinstall in separator plate reinforcing plate until Step 9.

c. The word UP stamped on separator plate reinforcing plate must be visible.

7. Install solenoid screen assembly and rotate to lock in place.

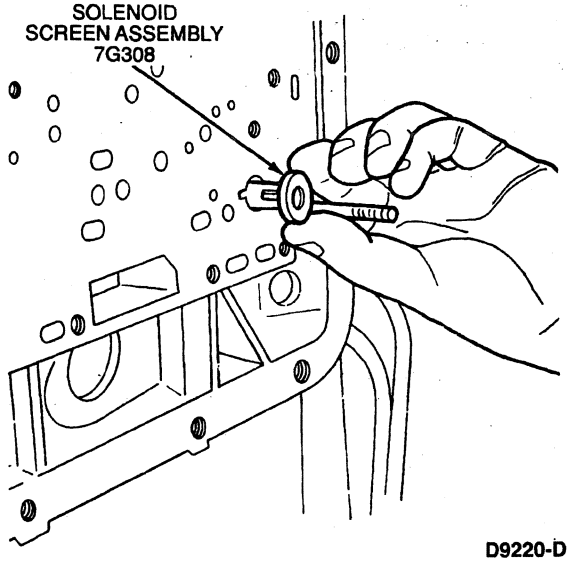

D9220-D

IN-VEHICLE SERVICE (Continued)

8. Install main control valve body over studs. Align manual shift valve with inner manual valve detent lever (7A115).

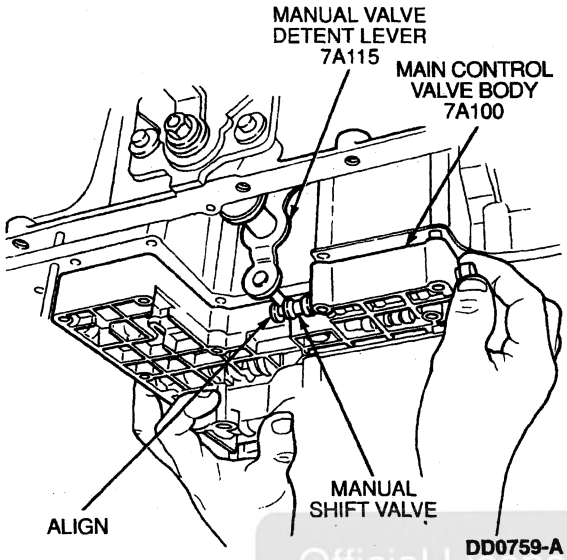

DD0759-A

9. NOTE: If separator plate reinforcing plate bolt has been used to retain valve body separator plate to case, reinstall after main control valve body is attached.

   Attach main control valve body with two nuts using a 10 mm socket and 14 bolts using an 8 mm socket. Tighten to 9-11 N·m (80-100 lb-in).

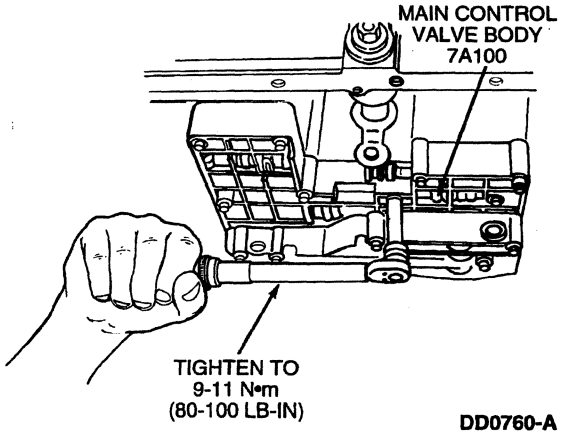

DD0760-A

10. Install accumulator body assembly over studs and attach with two nuts using a 10 mm socket and 11 bolts using an 8 mm socket. Tighten to 9-11 N·m (80-100 lb-in).

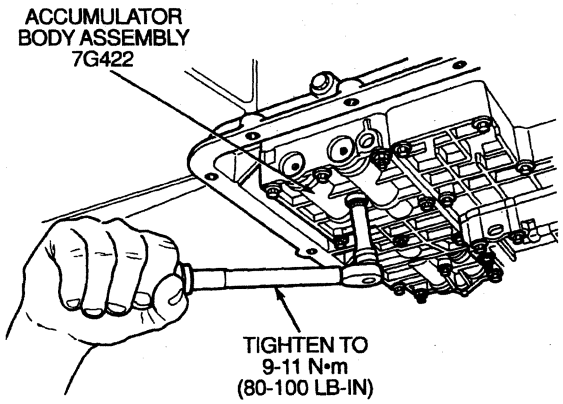

D9230-B

11. NOTE: Prior to solenoid body assembly installation, coat the case connector bore with Silicone Brake Caliper Grease and Dielectric Compound D7AZ-19331-A (Motorcraft WA-10) or equivalent meeting Ford specification ESA-M1C171-A. Inspect solenoid body assembly electrical connector for proper seating and condition.

    Install solenoid body assembly over stud and attach with nine Torx® bolts using a T30 bit and one nut using a 10 mm socket. Tighten to 9-11 N·m (80-100 lb-in).

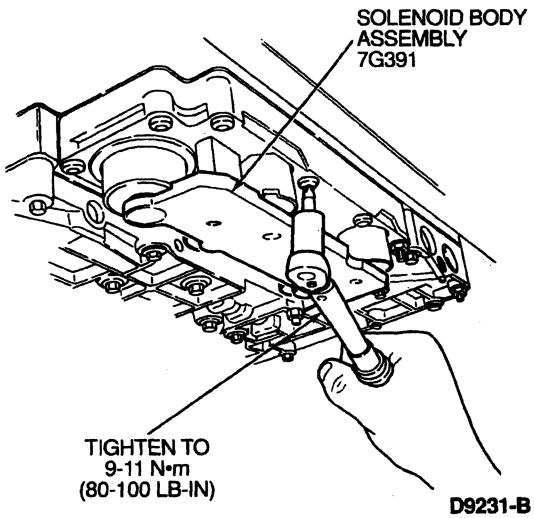

D9231-B

Official Licensed Product
Ford Motor Company

IN-VEHICLE SERVICE (Continued)

12. **CAUTION: Do not mix 4x4 and 4x2 transmission fluid filters and transmission pan assembly components. Transmission damage can result.**

    Select the appropriate style filter assembly and transmission pan for either 4x2 or 4x4 models.

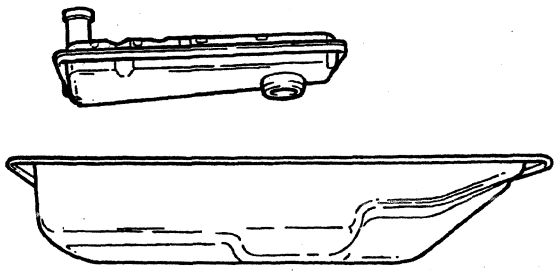

4x2 STYLE TRANSMISSION FLUID FILTER AND PAN

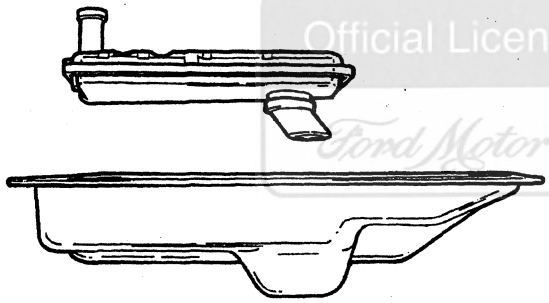

4x4 STYLE TRANSMISSION FLUID FILTER AND PAN

D16541-A

13. Install a new filter assembly and seal by lubricating the seal with transmission fluid and pressing the filter into place. Do not reuse old filter or seal.

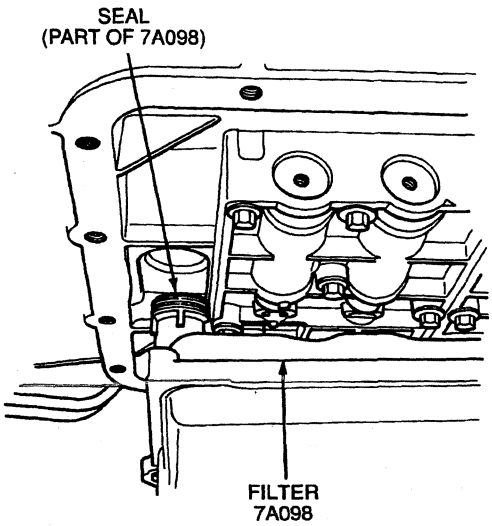

DD0756-A

14. Check for correct placement of transmission pan magnet over dimple in transmission pan.

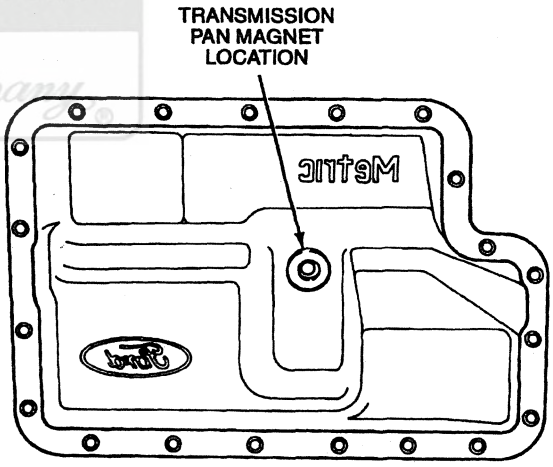

DD0623-A

Official Licensed Product
Ford Motor Company

IN-VEHICLE SERVICE (Continued)

15. **CAUTION: Cork gaskets and elastomeric gaskets are not interchangeable. If you remove a cork gasket, replace it with a cork gasket. If you remove an elastomeric gasket, clean, inspect and reuse unless gasket is damaged. Be careful not to cut or bend elastomeric gasket.**

    Clean, inspect and reuse elastomeric gasket unless damaged.

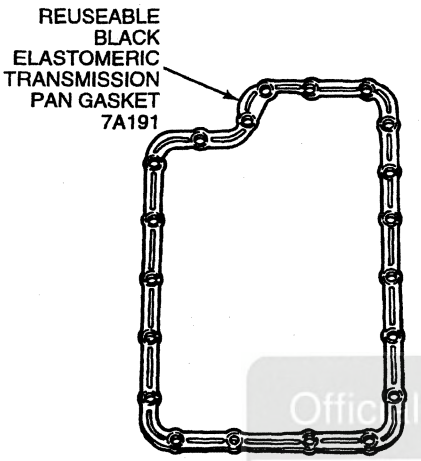

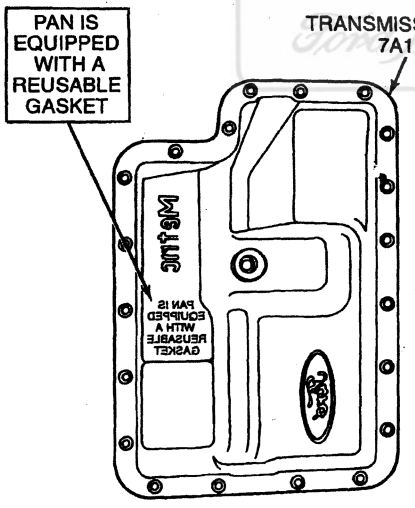

DD0611-B

16. Install cleaned pan, gasket and pan bolts using a 10 mm socket. Tighten to 14-16 N•m (10-12 lb-ft).

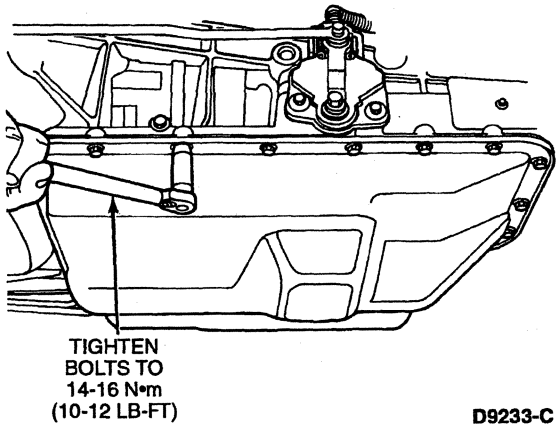

D9233-C

17. Completely seat solenoid body connector into solenoid body assembly receptacle by pushing on top of connector. Audible click indicates full connection.

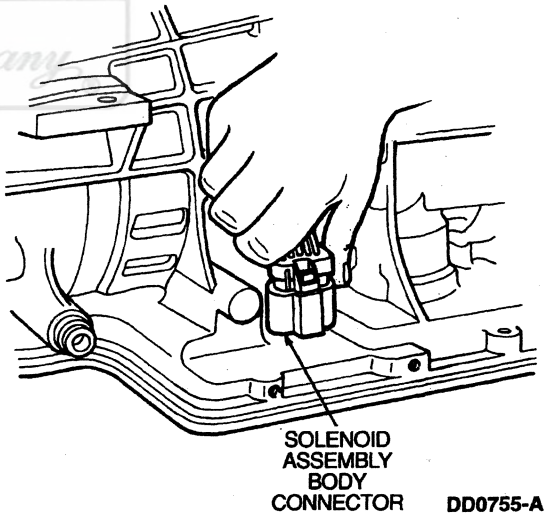

DD0755-A

Official Licensed Product Ford Motor Company

IN-VEHICLE SERVICE (Continued)

18. Install transmission heat shield with offset bending inward. Tighten bolts to 9-12 N•m (77-104 lb-in).

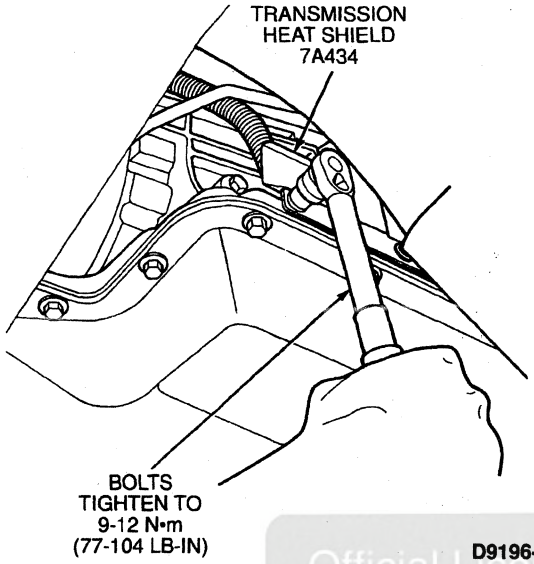

D9196-D

19. Lower vehicle.
20. Fill the transmission to the proper level with Motorcraft MERCON® Multi-Purpose Automatic Transmission Fluid XT-2-QDX or MERCON® equivalent. Refer to Fluid Capacity chart in the Specifications portion of this section.

Official Licensed Product

Extension Housing Seal and Bushing

SPECIAL SERVICE TOOL(S) REQUIRED

Description	Tool Number
Seal Remover	T74P-77248-A
Impact Slide Hammer	T50T-100-A
Extension Housing Bushing Remover	T77L-7697-D
Extension Housing Bushing Replacer	T77L-7697-C
Extension Housing Seal Replacer	T61L-7657-B

Removal

1. Raise vehicle on a hoist and position suitable safety stands under vehicle.
2. Remove rear driveshaft (4602). Refer to Section 05-01.
3. Remove extension housing seal using Seal Remover T74P-77248-A and Impact Slide Hammer T50T-100-A.

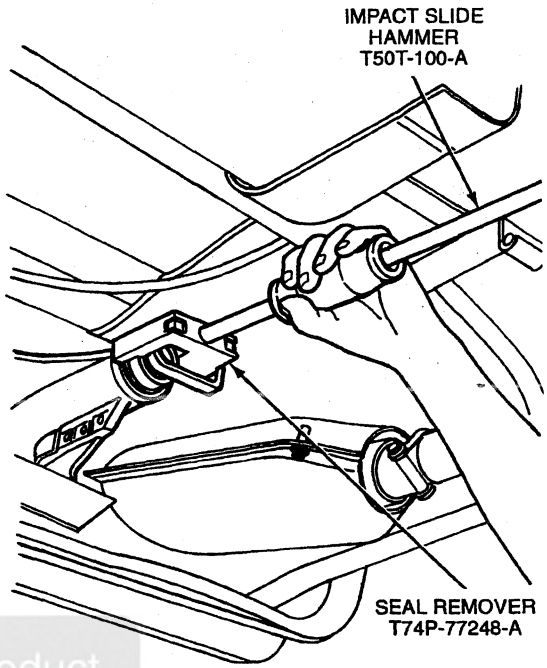

D10074-C

4. **CAUTION: Do not damage any machined surfaces.**

   Remove the extension housing bushing (7A034) using Extension Housing Bushing Remover T77L-7697-D.

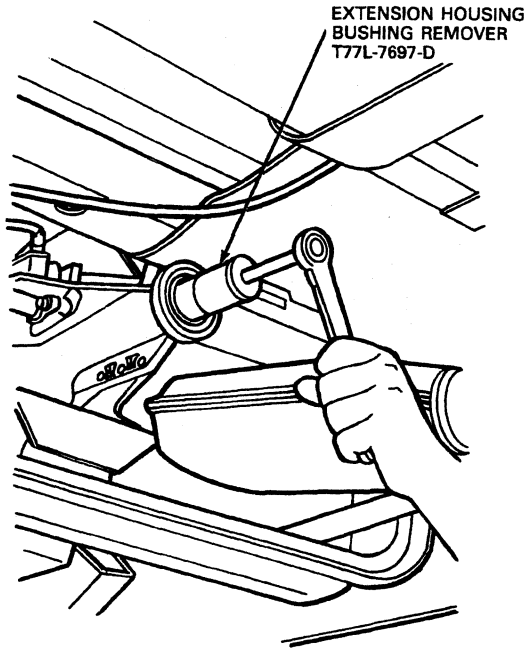

D10075-A

IN-VEHICLE SERVICE (Continued)

Installation

1. Inspect the counterbore of the extension housing (7A039) for burrs. If necessary, remove burrs with an oil stone.
2. Align extension housing bushing in extension housing so that the slots are in the 2 o'clock and 7 o'clock positions.

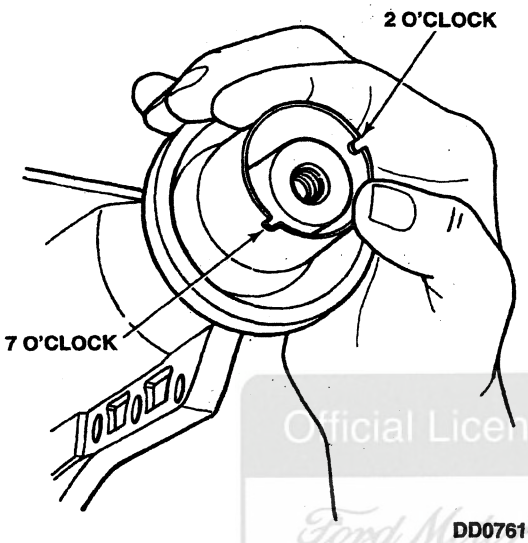

DD0761-A

3. Install extension housing bushing using Extension Housing Bushing Replacer T77L-7697-C.

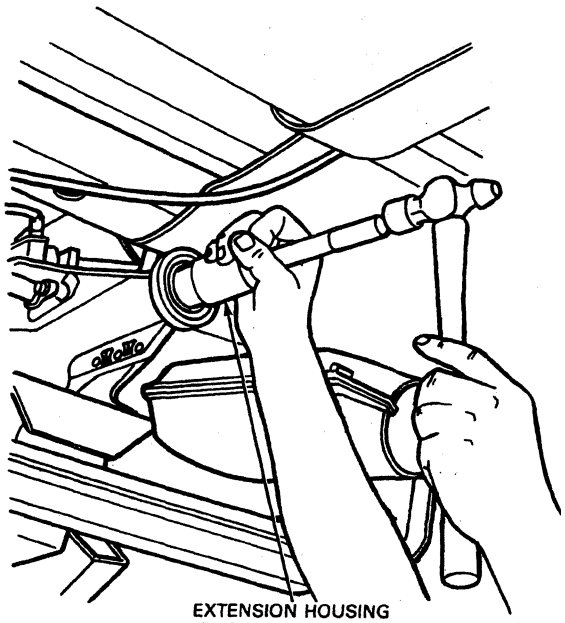

D10677-A

4. Position new extension housing seal with drain hole positioned downward.

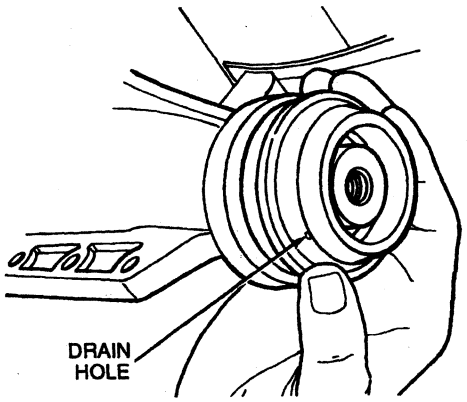

D10678-B

5. Seat extension housing seal using Extension Housing Seal Replacer T61L-7657-B.

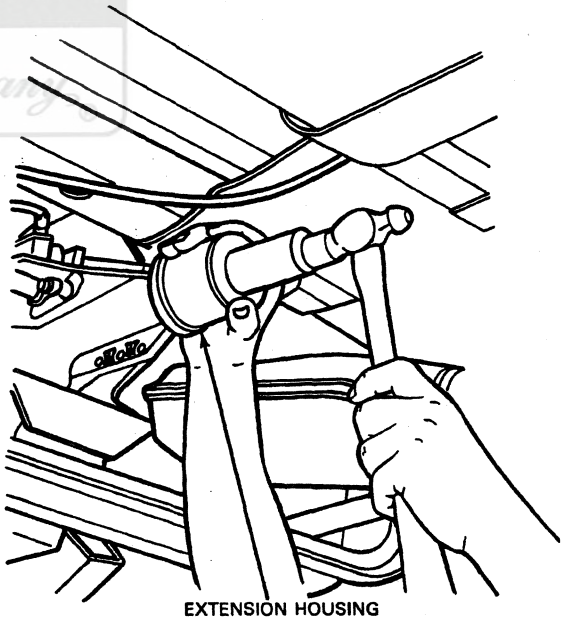

D10679-A

6. Inspect driveshaft slip yoke. Replace if damaged or worn.
7. **CAUTION: Be careful not to nick or damage extension housing seal during driveshaft installation.**

   Prior to installation, lightly coat slip-yoke with Premium Long-Life Grease XG-1-C or -K or equivalent meeting Ford specification ESA-M1C75-B.

Official Licensed Product
Ford Motor Company

IN-VEHICLE SERVICE (Continued)

8. Install driveshaft. Refer to Section 05-01.
9. Remove safety stands and lower vehicle.

Extension Housing Gasket

Removal

1. Raise vehicle on hoist and position suitable safety stands under vehicle.
2. Remove front (4x4 only) and rear driveshaft (4602). Refer to Section 05-01.
3. Remove transmission-mounted parking brake assembly (if so equipped). Refer to Section 06-05 in the Body, Chassis Manual.
4. Remove transfer case assembly (4x4 vehicle). Refer to Section 07-07B or Section 07-07C.
5. Remove transmission insulator and retainer nuts and bolts. Refer to Transmission in the Removal portion of this section for crossmember illustrations.
6. Carefully remove wire harness locators from extension housing wire bracket.
7. Secure universal transmission jack with Rotunda E4OD Transmission Jack Adapter 014-00763 or equivalent to transmission. Raise transmission jack.
8. Remove nine extension housing bolts using a 13 mm wrench. Remove wiring bracket.

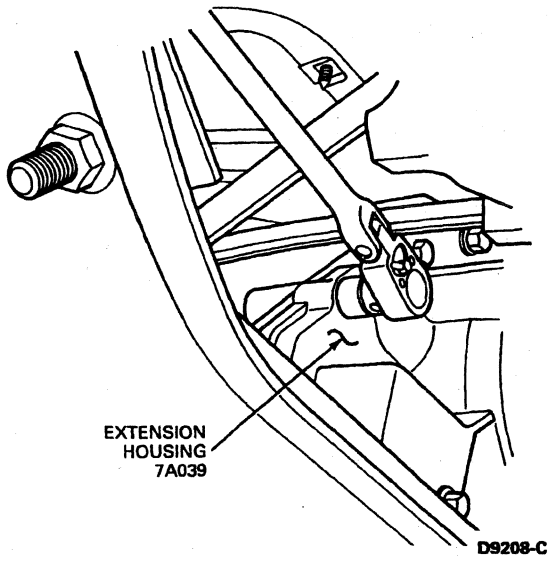

9. Remove and discard extension housing gasket from extension housing (7A039) and mating surfaces.

Installation

1. Clean extension housing and case mating surfaces. Place a light film of petroleum jelly on the extension housing gasket and position gasket on the extension housing.

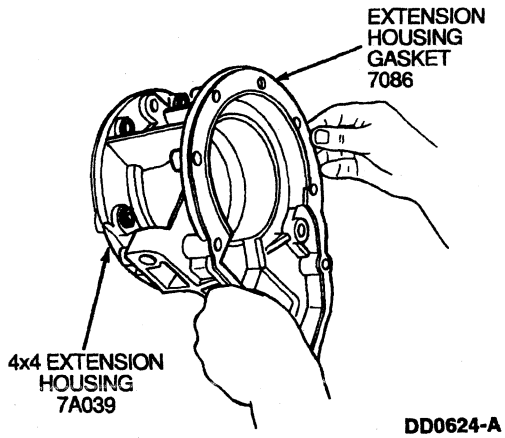

2. NOTE: Make sure parking pawl return spring (7D070) is fully seated into the case (7005) prior to installing extension housing.

   Raise extension housing into position. Position wiring bracket.
3. Install nine extension housing bolts using a 13 mm socket. Tighten to 41-54 N·m (30-40 lb-ft).

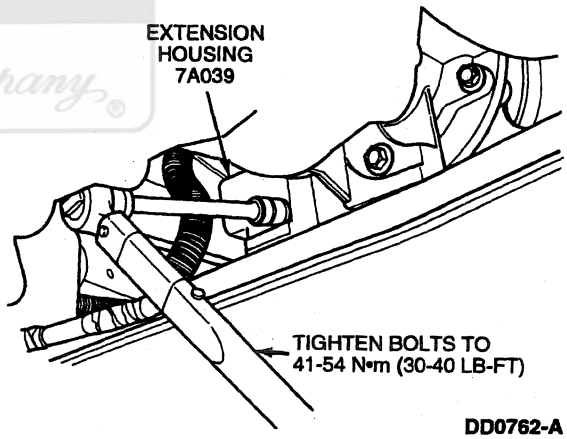

4. Install new wire harness locator into extension housing wire bracket.
5. Install transmission insulator and retainer. Tighten bolts to 81-108 N·m (60-80 lb-ft).
6. Lower jack while aligning insulator and retainer studs with holes in crossmember.
7. Install transmission insulator and retainer nuts. Tighten nuts to 81-108 N·m (60-80 lb-ft) for all except F-Super Duty. Tighten to 68-95 N·m (50-70 lb-ft) for F-Super Duty.
8. Remove universal transmission jack.
9. Install transmission-mounted parking brake assembly (if so equipped). Refer to Section 06-05 in the Body, Chassis Manual.
10. On 4x4 models, install transfer case. Refer to Section 07-07B or Section 07-07C.

Ford Motor Company Licensed Product

IN-VEHICLE SERVICE (Continued)

11. Install front (4x4 only) and rear driveshaft. Refer to Section 05-01.
12. Lower vehicle.
13. Fill the transmission (7003) to the proper level with Motorcraft MERCON® Multi-Purpose Automatic Transmission Fluid XT-2-QDX or MERCON® equivalent.

Manual Control Lever Shaft Seal

SPECIAL SERVICE TOOL(S) REQUIRED

Description	Tool Number
Lock Nut Pin Remover	T78P-3504-N
Puller	T58L-101-B
Shift Lever Seal Replacer	T74P-77498-A
Transmission Range (TR) Sensor (MLPS) Alignment Tool	T92P-70010-AH

Removal

1. Remove shift cable or linkage from manual control lever (7A256). Use a screwdriver and remove the cable and fitting from the manual control lever ball stud.
2. Place a drain pan under the transmission pan. Remove rear and side transmission pan bolts using a 10 mm socket.

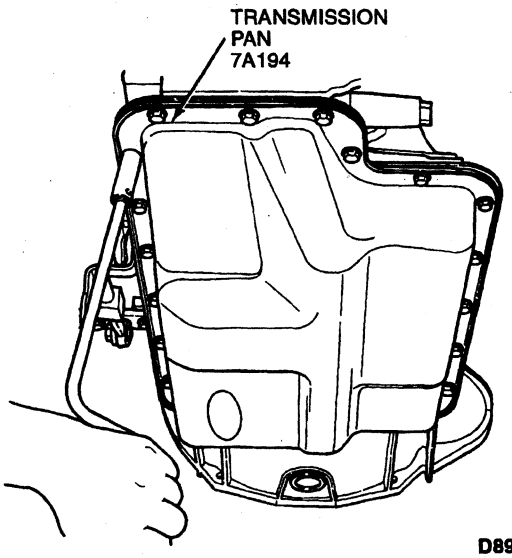

D8954-E

3. Loosen the front pan bolts using a 10 mm socket. Lower the rear of the transmission pan from the case and allow fluid to drain.
4. Remove front pan bolts using a 10 mm socket. Remove transmission pan.
5. **CAUTION: Cork gaskets and elastomeric gaskets are not interchangeable. If you remove a cork gasket, replace it with a cork gasket. If you remove an elastomeric gasket, clean, inspect and reuse unless gasket is damaged. Be careful not to cut or bend elastomeric gasket.**

   Remove, but do not discard, reusable elastomeric transmission pan gasket.

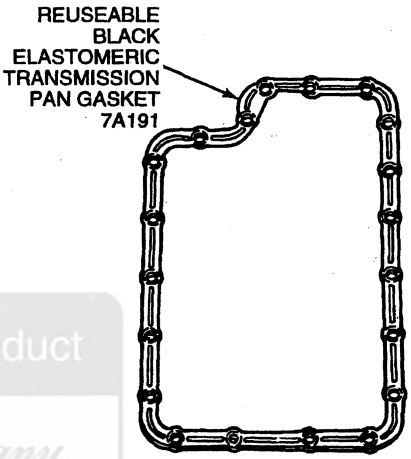

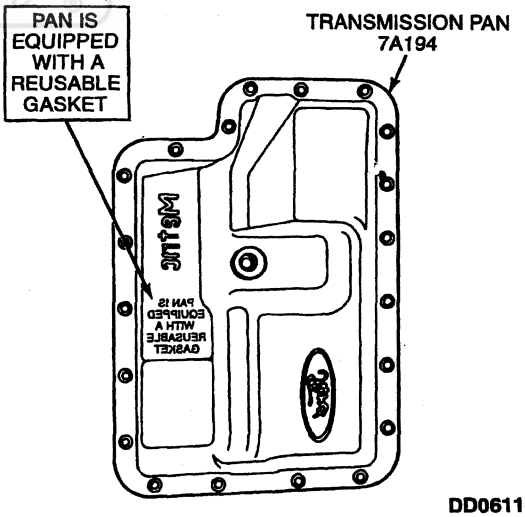

DD0611-B

Licensed Product
Ford Motor Company

IN-VEHICLE SERVICE (Continued)

6. NOTE: Seal might remain in bore when filter assembly is removed.

   Remove filter assembly and seal by carefully pulling and rotating filter as necessary. Discard filter assembly and seal.

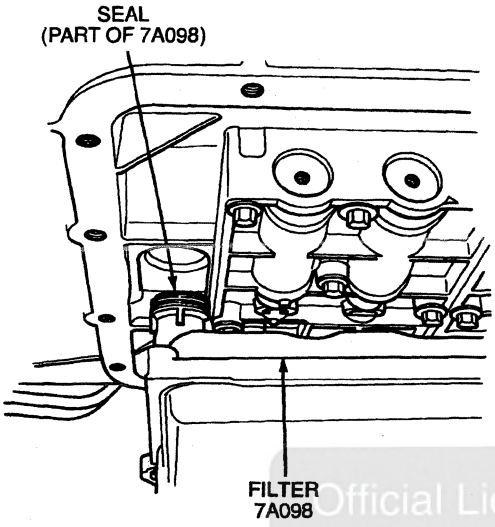

DD0756-A

7. **CAUTION: Use care not to scratch or damage aluminum pump bore.**

   If seal remains in bore, carefully remove using a screwdriver.

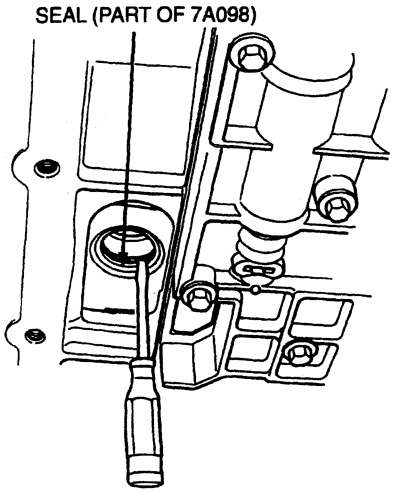

D9216-C

8. **CAUTION: Do not damage any machined surfaces.**

   NOTE: A number 53 drill bit (1 / 16-inch) can be used as an alternative method to remove the manual lever shaft retaining pin (7B210).

   Remove manual lever shaft retaining pin using Lock Nut Pin Remover T78P-3504-N.

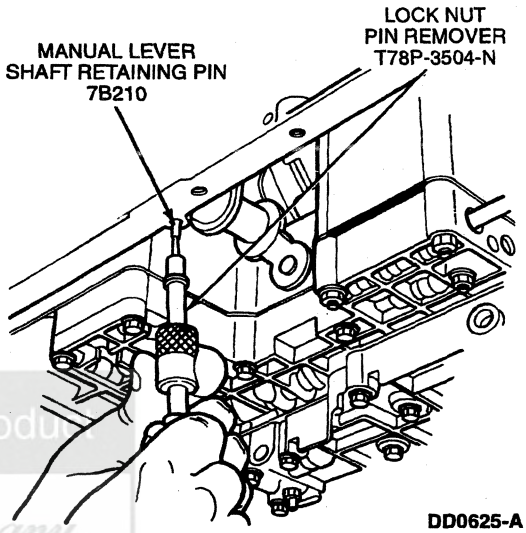

DD0625-A

9. Remove inner manual valve detent lever nut using a 21 mm box wrench while holding manual lever assembly with a crescent wrench.
10. Remove inner manual valve detent lever (7A115) and parking pawl actuating rod assembly from manual control lever shaft (7C493).
11. **CAUTION: After removal, discard outer manual control lever shaft nut. Do not reuse.**

    Remove outer manual control lever shaft nut using a 15 mm open end wrench while holding manual control lever with crescent wrench.
12. Remove manual control lever.
13. Disconnect transmission range (TR) sensor connector by squeezing connector tabs and pulling on connector. Check connector for terminal condition, corrosion and contamination. Check connector seal for damage. Repair or replace as required.
14. Remove two TR sensor bolts and washers using an 8 mm socket and remove sensor.
15. Remove manual control lever shaft.

Official Licensed Product Ford Motor Company

IN-VEHICLE SERVICE (Continued)

16. **CAUTION: Use care not to damage the manual control lever shaft bore.**

    Remove manual control lever seal using Puller T58L-101-B.

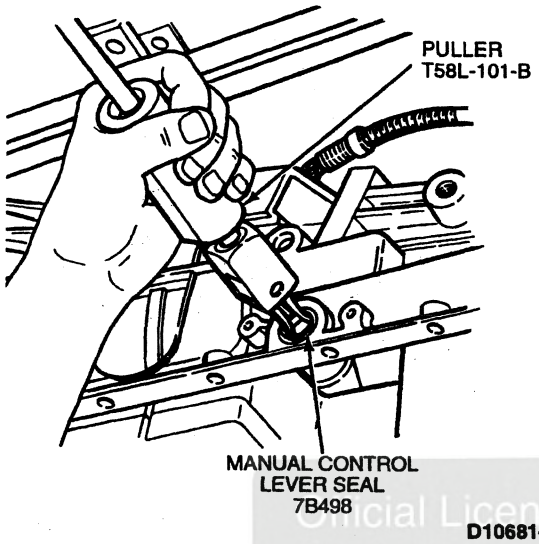

Installation

1. Clean bore opening with mineral spirits. Install manual control lever seal using Shift Lever Seal Replacer T74P-77498-A.

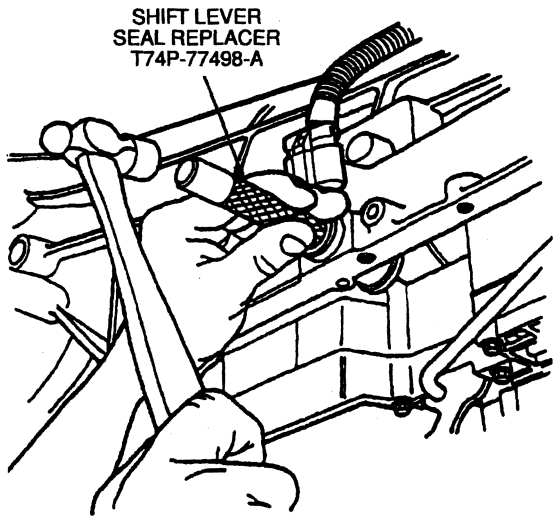

2. Install manual control lever shaft.

3. NOTE: Inner manual valve detent lever must be seated on flats of manual control lever shaft. Parking pawl actuating rod must be through guide plate. Detent lever pin must be properly engaged with manual shift valve.

   Install manual valve detent lever, parking pawl actuating rod and nut.

4. Tighten inner manual valve detent lever nut using a 21 mm crowfoot while holding manual control lever shaft with crescent wrench. Tighten nut to 41-54 N·m (30-40 lb-ft).

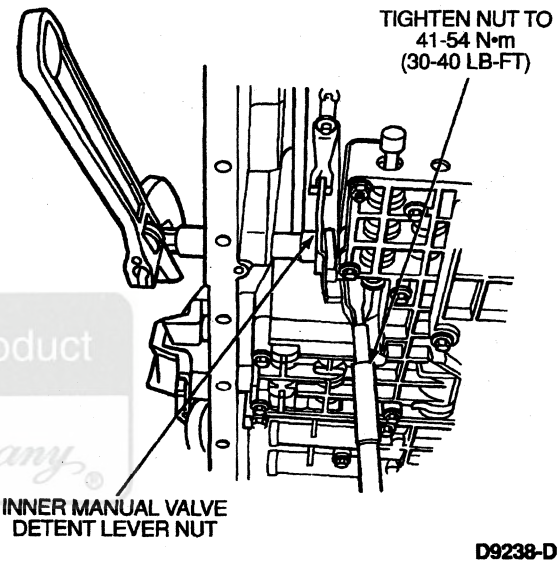

5. **CAUTION: Use care not to damage the transmission fluid pan (7A194) sealing surface.**

   Install and seat manual lever shaft retaining pin below the case surface.

6. Install TR sensor with two bolts and washers. **Do not** tighten bolts at this time.

7. Align sensor with the transmission in neutral gear position using Transmission Range (TR) sensor (MLPS) Alignment Tool T92P-70010-AH.

8. Using an 8 mm socket, tighten bolts to 8-10 N·m (75-85 lb-in).

9. **CAUTION: The TR sensor connector seal is located in the vehicle harness connector.**

   NOTE: After connecting TR sensor connector, verify connection by pulling on harness.

   Install TR sensor harness connector. Audible click indicates full connection.

10. NOTE: The manual control lever must be seated on the flats of the manual control lever shaft.

    Install the manual control lever onto the manual control lever shaft.

Official Licensed Product
Ford Motor Company

IN-VEHICLE SERVICE (Continued)

11. **CAUTION: A new outer manual control lever shaft nut must be used to properly secure manual control lever to manual control lever shaft.**

    Install a new outer manual control lever shaft nut while holding the manual control lever with a crescent wrench. Tighten the nut to 35-47 N·m (26-35 lb-ft).

12. Install shift cable onto the manual control lever. Use a screwdriver to press cable end fitting over transmission manual control lever ball stud.

13. Shift manual control lever to all detent positions to check proper engagement of all positions and parking mechanism.

14. **CAUTION: Do not mix 4x4 and 4x2 transmission fluid filters and transmission pan assembly components. Transmission damage can result.**

    Select the appropriate style filter assembly and transmission pan for either 4x2 or 4x4 models.

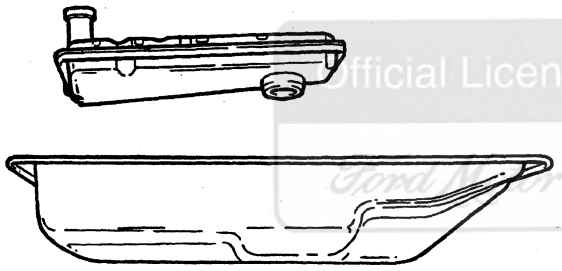

4x2 STYLE TRANSMISSION FLUID FILTER AND PAN

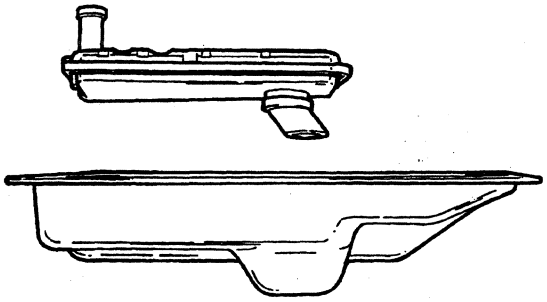

4x4 STYLE TRANSMISSION FLUID FILTER AND PAN

D16541-A

15. NOTE: Do not reuse old filter assembly or seal.

    Install new filter assembly and seal by lubricating seal with transmission fluid and pressing filter into place.

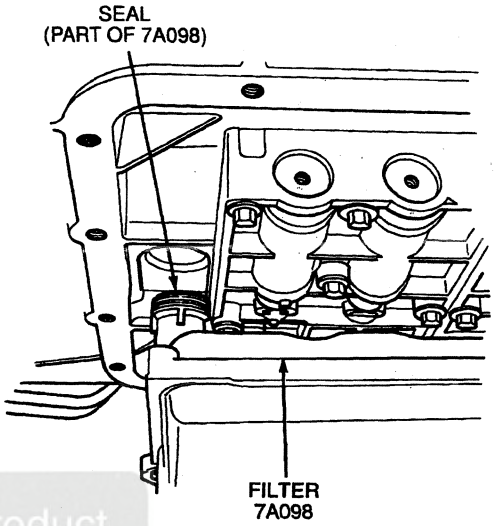

DD0756-A

16. Clean and check condition of transmission pan magnet. Position pan magnet over dimple in transmission pan.

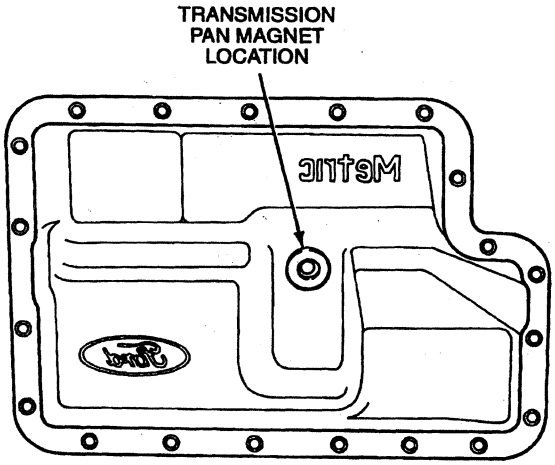

DD0623-A

Official Licensed Product
Ford Motor Company

IN-VEHICLE SERVICE (Continued)

17. **CAUTION: Cork gaskets and elastomeric gaskets are not interchangeable. If you remove a cork gasket, replace it with a cork gasket. If you remove an elastomeric gasket, clean, inspect and reuse unless gasket is damaged. Be careful not to cut or bend elastomeric gasket.**

    Clean, inspect and reuse elastomeric gasket unless damaged.

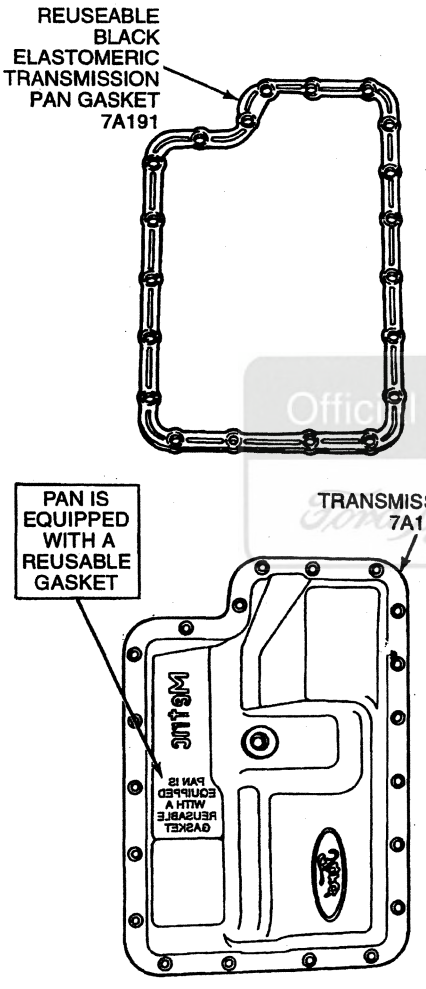

18. Install transmission pan, gasket and bolts using a 10 mm socket. Tighten bolts to 14-16 N·m (10-12 lb-ft).
19. Remove safety stands and lower vehicle.
20. Fill the transmission to proper level with Motorcraft MERCON® Multi-Purpose Automatic Transmission Fluid XT-2-QDX or MERCON® equivalent.
21. Check shift cable adjustment. Refer to Section 07-05.

Official Licensed Product Ford Motor Company

IN-VEHICLE SERVICE (Continued)

Fluid Cooler Lines

Transmission Fluid Cooler Tubes, F-250 Heavy Duty, F-350 and F-Super Duty, 5.8L and 7.5L Engines

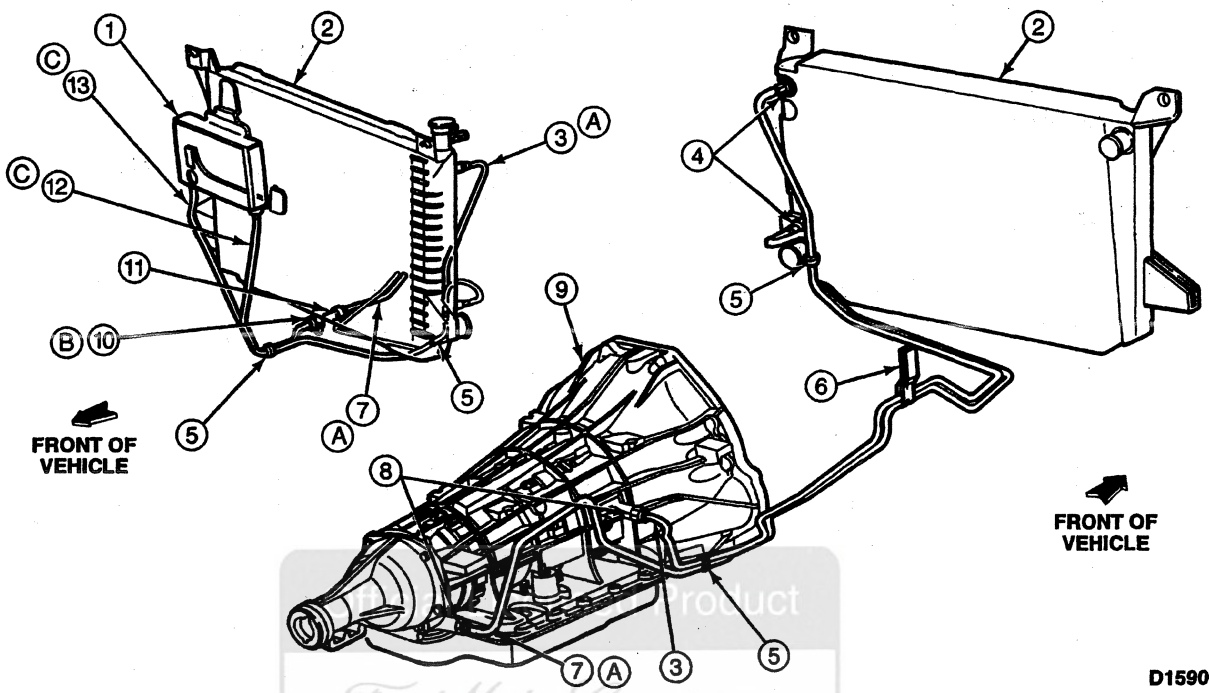

Item	Part Number	Description
1	7A095	Transmission Fluid Cooler
2	8005	Radiator
3	7A031	Fluid Cooler Tube
4	7D273	Fluid Tube Connector
5	372223-S101	C-Clip
6	7N291	Transmission Fluid Cooler Line Clip
7	7A030	Fluid Cooler Inlet Tube
8	—	Connector (Part of 7000)
9	7000	Automatic Transmission

(Continued)

Item	Part Number	Description
10	376240-S	Clamp
11	N809635-S165A	Hose
12	7F113	Inlet Tube
13	7F112	Outlet Tube
A	—	Tighten to 16-24 N·m (12-18 Lb-Ft)
B	—	Tighten to 3.1-4.3 N·m (27-38 Lb-In)
C	—	Tighten to 10-14 N·m (7.4-10.3 Lb-Ft)

IN-VEHICLE SERVICE (Continued)

Transmission Fluid Cooler Tubes, F-Super Duty Motorhome Chassis (Except Diesel)

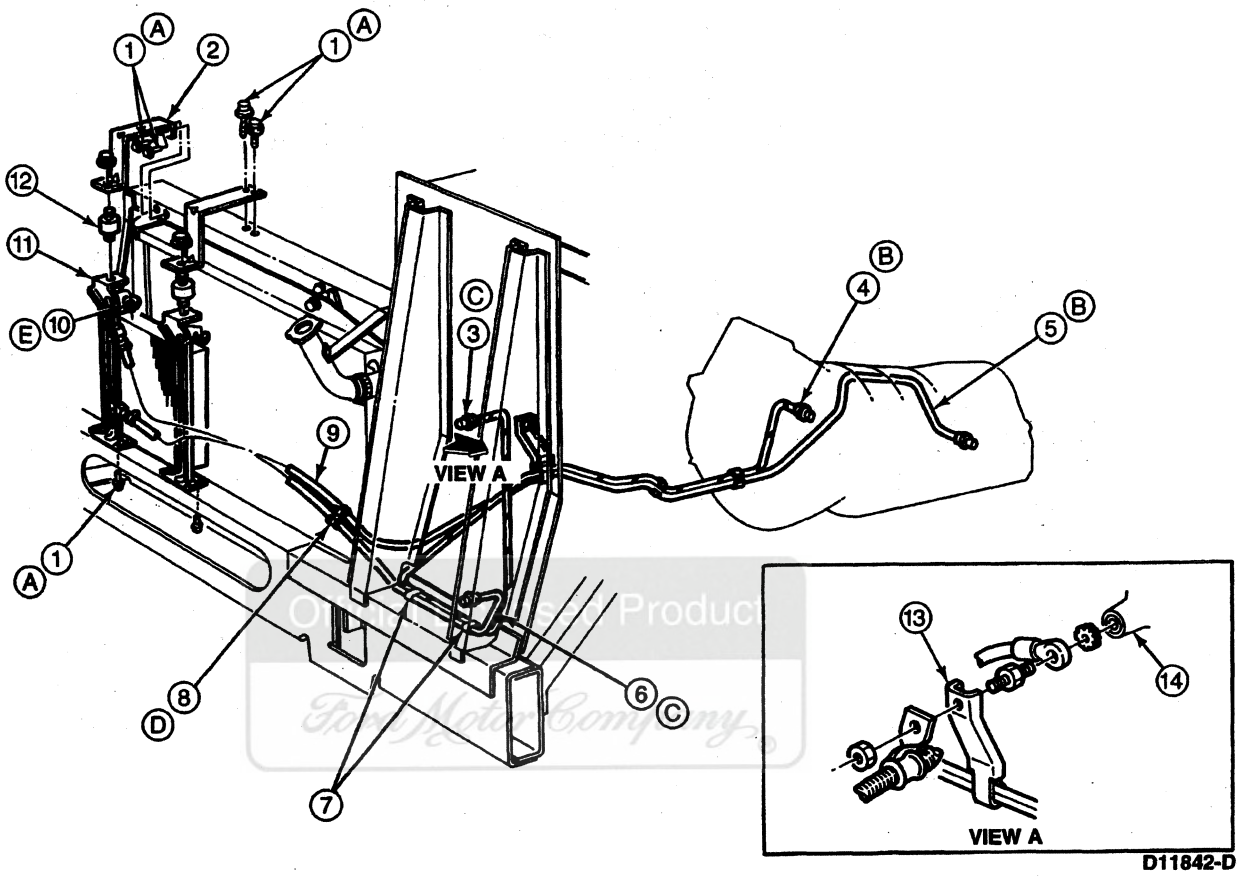

Item	Part Number	Description
1	W611102-S2	Screw and Washer
2	6K761	Fluid Cooler Upper Bracket
3	7D273	Tube Connector
4	7A031	Outlet Tube
5	7A030	Fluid Cooler Inlet Tube
6	7F113	Inlet Tube
7	372223-S101	C-Clip
8	376240	Clamp
9	N809635	Hose
10	55736	Nut
11	7A095	Transmission Fluid Cooler
12	6C645	Insulator

(Continued)

Item	Part Number	Description
13	7N291	Transmission Cooler Line Clip
14	6010	Cylinder Block
A	—	Tighten to 7-10 N·m (62-88 Lb-In)
B	—	Tighten to 16-24 N·m (12-18 Lb-Ft)
C	—	Tighten to 24-30 N·m (18-22 Lb-Ft)
D	—	Tighten to 3.1-4.3 N·m (27-38 Lb-In)
E	—	Tighten to 16-24 N·m (12-18 Lb-Ft)

IN-VEHICLE SERVICE (Continued)

Transmission Fluid Cooler Tubes, F-250 Heavy Duty, F-350 and F-Super Duty (7.3L Diesel)

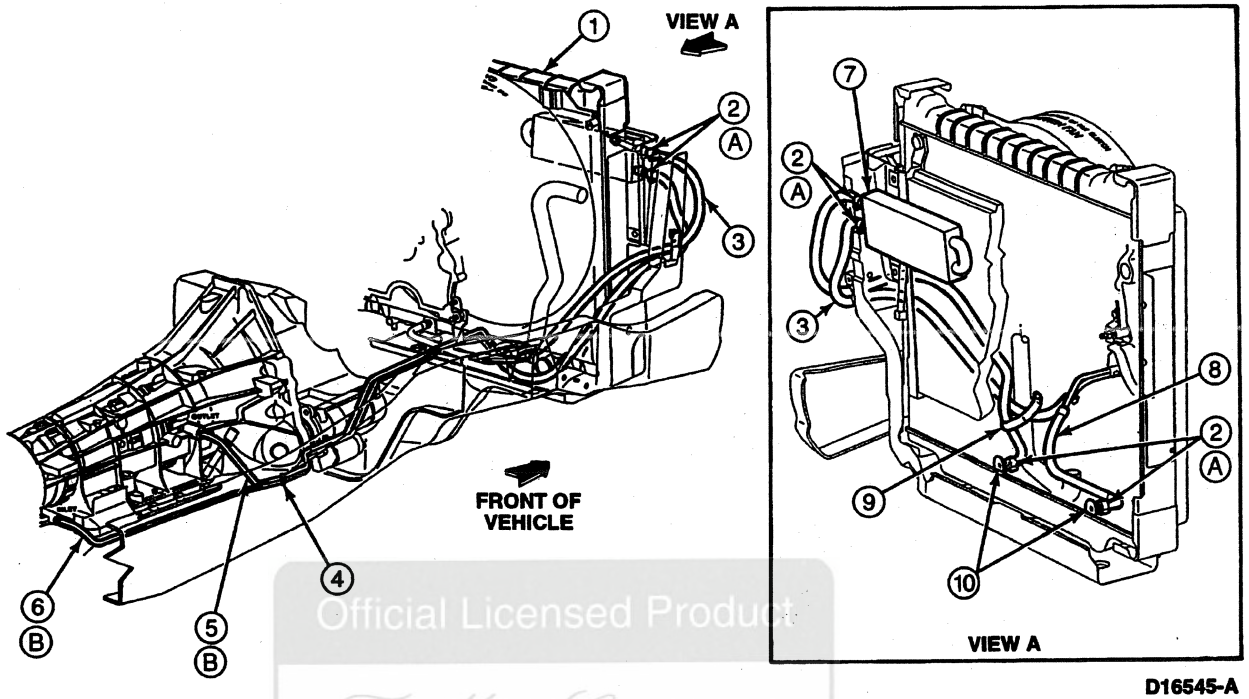

D16545-A

Item	Part Number	Description
1	8005	Radiator
2	7C107	Clamp
3	7890	Hose
4	372223-S101	C-Clip
5	7A031	Outlet Tube
6	7A030	Fluid Cooler Inlet Tube
7	7A095	Transmission Fluid Cooler

(Continued)

Item	Part Number	Description
8	N809635-S183A	Hose
9	—	Strap
10	7G058	Connector
A	—	Tighten to 3.1-4.3 N·m (27-38 Lb-In)
B	—	Tighten to 16-24 N·m (12-18 Lb-Ft)

Official Licensed Product
Ford Motor Company

Heat Shield

Removal

1. Loosen the two transmission heat shield bolts using an 8 mm socket.
2. Remove the transmission heat shield (7A434).

Installation

1. Install transmission heat shield with offset bending inward.

IN-VEHICLE SERVICE (Continued)

2. Tighten bolts to 9-12 N•m (77-104 lb-in).

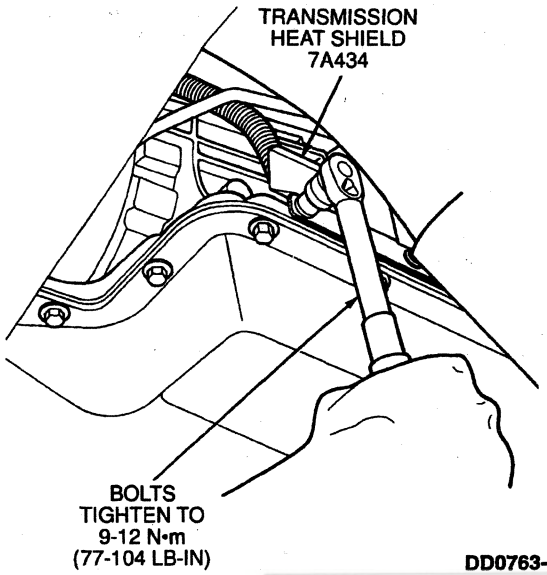

DD0763-A

Fluid Pan, Gasket and Filter

Removal

1. Raise the vehicle on a hoist and position suitable safety stands under vehicle.
2. Place a drain pan under the transmission pan. Remove rear and side transmission pan bolts using a 10 mm socket.

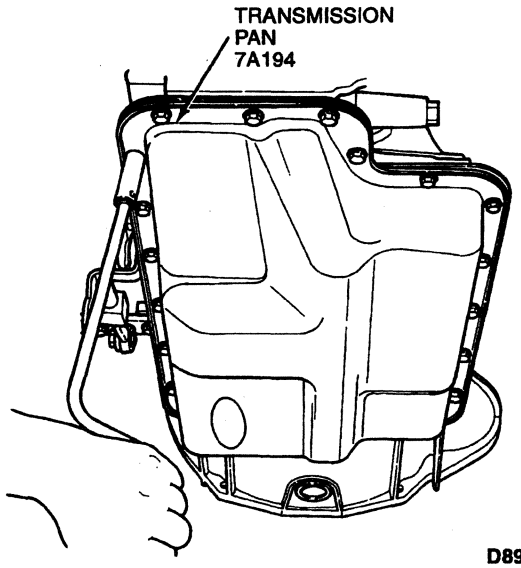

D8954-E

3. Loosen the front pan bolts using a 10 mm socket. Lower the rear of the transmission pan from the case and allow fluid to drain.
4. Remove front pan bolts using a 10 mm socket. Remove transmission pan.
5. **CAUTION: Cork gaskets and elastomeric gaskets are not interchangeable. If you remove a cork gasket, replace it with a cork gasket. If you remove an elastomeric gasket, clean, inspect and reuse unless gasket is damaged. Be careful not to cut or bend elastomeric gasket.**

   Remove, but do not discard, reusable elastomeric transmission pan gasket.

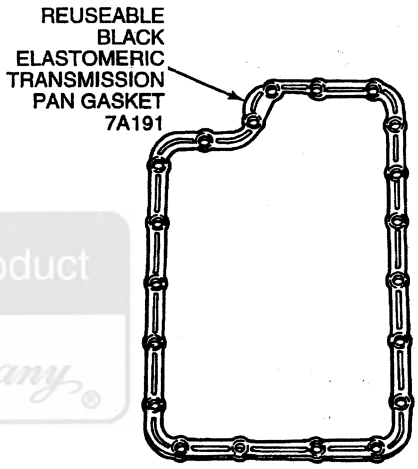

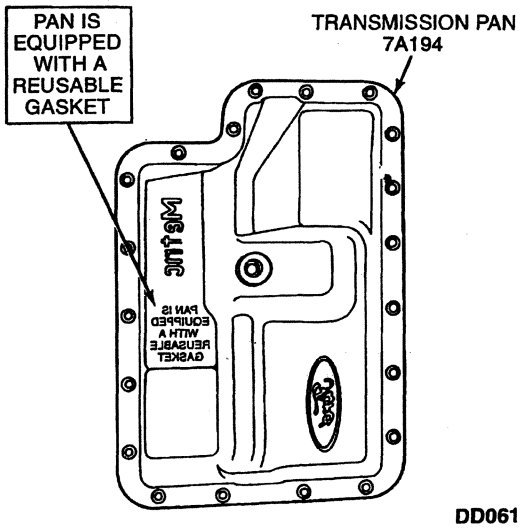

DD0611-B

Official Licensed Product
Ford Motor Company

IN-VEHICLE SERVICE (Continued)

6. NOTE: Seal might remain in bore when filter assembly is removed.

   Remove filter assembly and seal by carefully pulling and rotating filter as necessary. Discard filter assembly and seal.

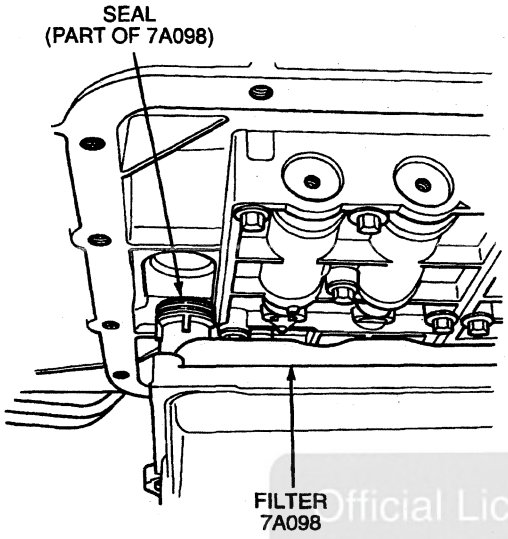

DD0756-A

7. **CAUTION: Use care not to scratch or damage aluminum pump bore.**

   If seal remains in bore, carefully remove using a screwdriver.

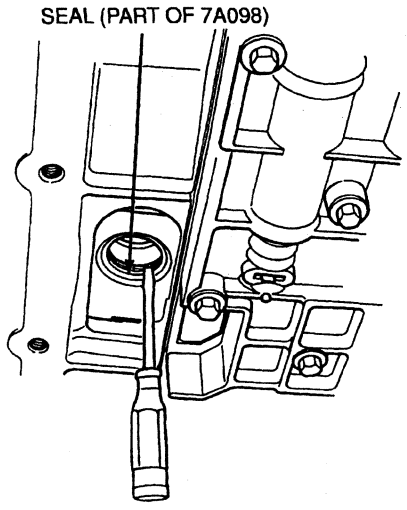

D9216-C

Installation

1. **CAUTION: Do not mix 4x4 and 4x2 transmission fluid filters and transmission pan assembly components. Transmission damage can result.**

   Select the appropriate style filter assembly and transmission pan for either 4x2 or 4x4 models.

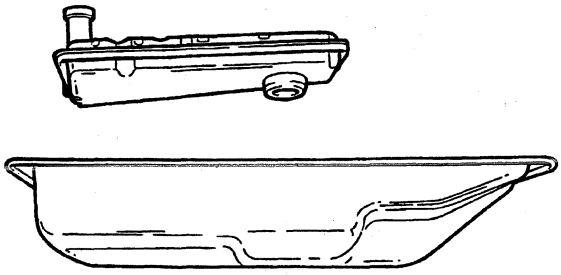

4x2 STYLE TRANSMISSION FLUID FILTER AND PAN

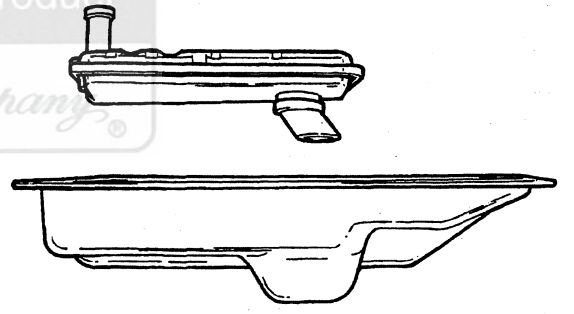

4x4 STYLE TRANSMISSION FLUID FILTER AND PAN

D16541-A

Official Licensed Product
Ford Motor Company

IN-VEHICLE SERVICE (Continued)

2. NOTE: Do not reuse old filter assembly or seal.
   Install new filter assembly and seal by lubricating seal with transmission fluid and pressing filter into place.

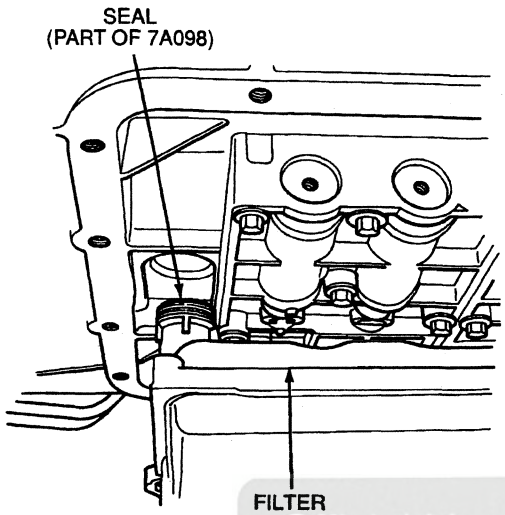

DD0756-A

3. Clean and check condition of transmission pan magnet. Position pan magnet over dimple in transmission pan.

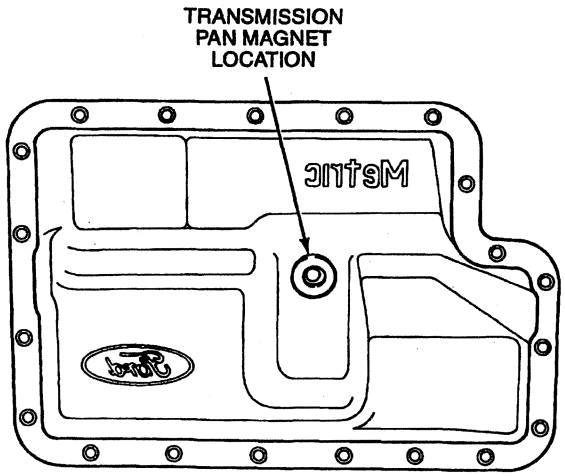

DD0623-A

4. **CAUTION: Cork gaskets and elastomeric gaskets are not interchangeable. If you remove a cork gasket, replace it with a cork gasket. If you remove an elastomeric gasket, clean, inspect and reuse unless gasket is damaged. Be careful not to cut or bend elastomeric gasket.**
   Clean, inspect and reuse elastomeric gasket unless damaged.

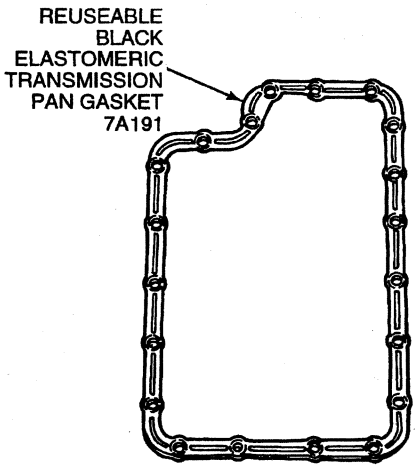

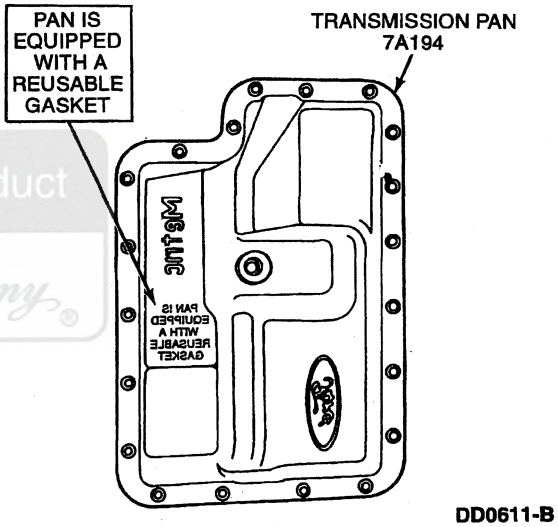

DD0611-B

5. Install transmission pan, gasket and bolts using a 10 mm socket. Tighten bolts to 14-16 N·m (10-12 lb-ft).
6. Remove safety stands and lower vehicle.
7. Fill the transmission (7003) to proper level with Motorcraft MERCON® Multi-Purpose Automatic Transmission Fluid XT-2-QDX or MERCON® equivalent.

Park System

Removal

1. Remove the extension housing gasket. Refer to Extension Housing Gasket in the In-Vehicle Service portion of this section.

Official Licensed Product
Ford Motor Company

IN-VEHICLE SERVICE (Continued)

2. Remove two bolts using a 13 mm socket and remove parking rod guide plate.

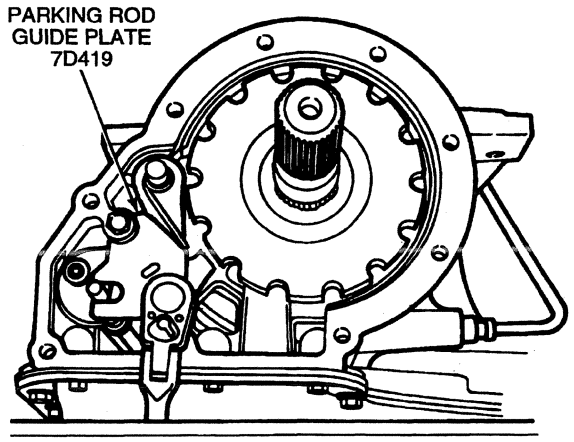

DD0764-A

3. Remove parking pawl return spring (7D070), parking pawl (7A441) and parking pawl shaft (7D071) from case.

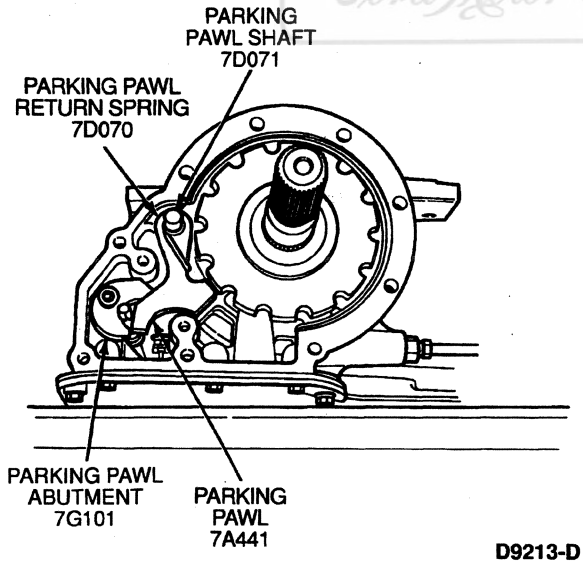

D9213-D

Installation

1. Follow removal procedure in reverse order.
2. Make sure spring end rests on inside surface of case.
3. Also make sure dimple on parking rod guide plate faces inward when installed.
4. Tighten parking rod guide plate bolts to 22-27 N·m (16-20 lb-ft).

For internal park mechanism service, refer to Manual Control Lever Shaft Seal, Removal and Installation procedures in the In-Vehicle Service portion of this section.

REMOVAL

Transmission

SPECIAL SERVICE TOOL(S) REQUIRED

Description	Tool Number
Torque Converter Handles	T81P-7902-C

Removal

1. Disconnect battery ground cable at the battery (10653).
2. Remove fluid level indicator (7A020).
3. Place transmission range selector lever in NEUTRAL position.
4. Raise vehicle on a hoist and position suitable safety stands under vehicle.
5. Remove skid plate (4x4 vehicles).
6. On 4x4 vehicles only, remove front driveshaft (4602). Refer to Section 05-01.
7. Remove rear driveshaft. Refer to Section 05-01. On F-Super Duty vehicles, remove the transmission-mounted parking brake. Refer to Section 06-05 in the Body, Chassis Manual.
8. Disconnect shift cable, or linkage on F-Super Duty Motorhome. Refer to Section 07-05.
9. On 4x4 vehicles only, remove shift linkage from transfer case shift lever.
10. **CAUTION: Do not attempt to pry tabs with pry bar or screwdriver.**

    Disconnect transmission range (TR) sensor connector by pushing center tab and pulling on connector.

Ford Motor Company Official Licensed Product

REMOVAL (Continued)

11. Loosen the two transmission heat shield bolts using an 8 mm socket. Remove the transmission heat shield (7A434).

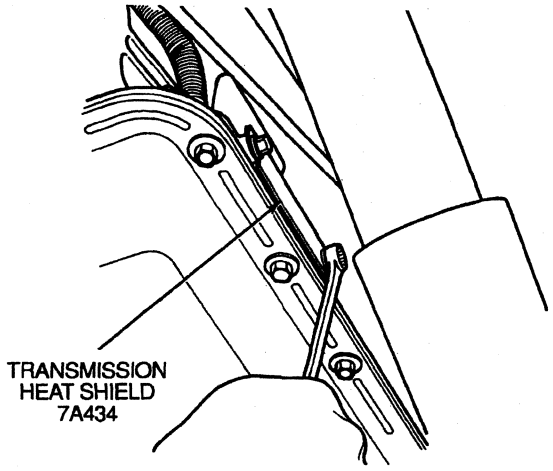

D9161-B

12. **CAUTION: Do not attempt to pry tab with pry bar or screwdriver.**

    Remove solenoid body assembly connector carefully by pushing on the center tab and pulling on the harness connector.

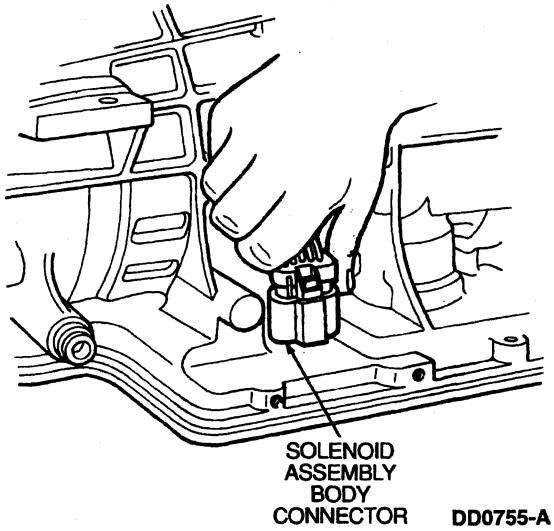

DD0755-A

13. On 4x4 vehicles only, remove four-wheel drive switch connector from transfer case. Use care not to overextend tabs.
14. Carefully pry wire harness locator from extension housing wire bracket.

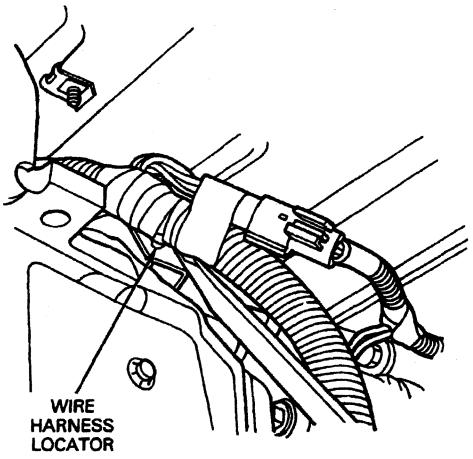

D9165-1A

15. On 4x4 vehicles only, remove wire harness locators from left side of transmission support crossmember (6A023).

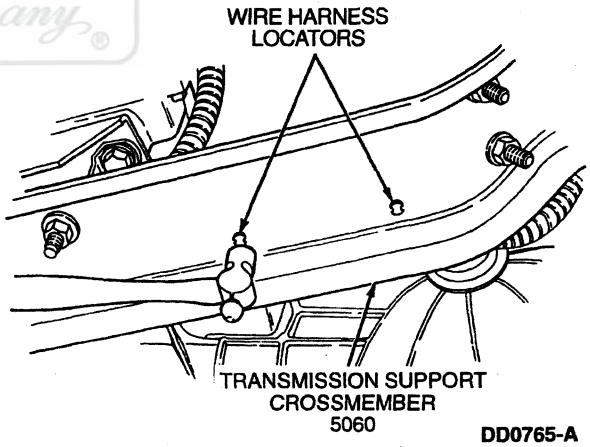

DD0765-A

Official Licensed Product

REMOVAL (Continued)

16. Remove lower torque converter cover bolts using a 10 mm socket and remove cover.

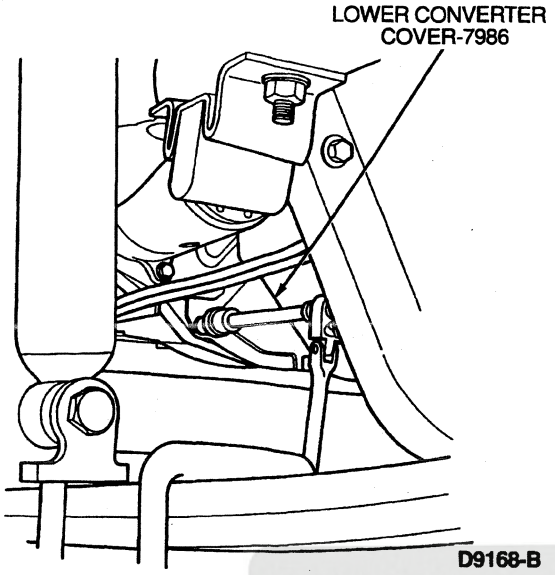

D9168-B

17. Remove rear engine cover plate bolts.

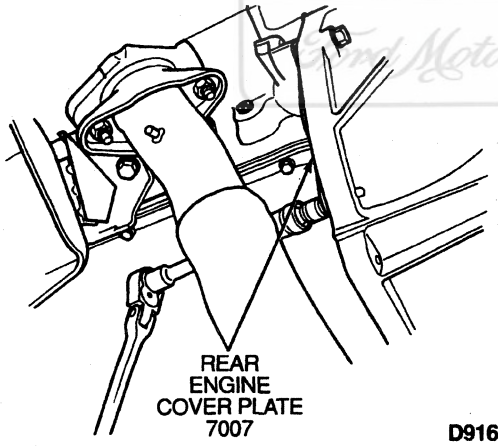

D9169-B

18. Remove starter motor (11001). Refer to Section 03-06A or Section 03-06B.
19. Remove converter housing access plug (7N171). Use a 15/16-inch socket to rotate crankshaft (6303) to gain access to the converter drain plug. Remove plug. Drain torque converter (7902).
20. Rotate crankshaft bolt to gain access to converter nuts. Using a 9/16-inch socket, remove four (six for 7.3L) converter mounting nuts and discard.

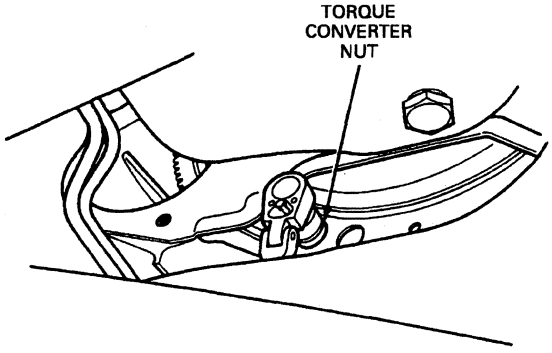

D9172-B

21. Position Rotunda Highlift Transmission Jack 014-00942 or equivalent and adapter to transmission (7003) as shown in following illustrations.

Placement of Positioning Pins

4x2 VEHICLES

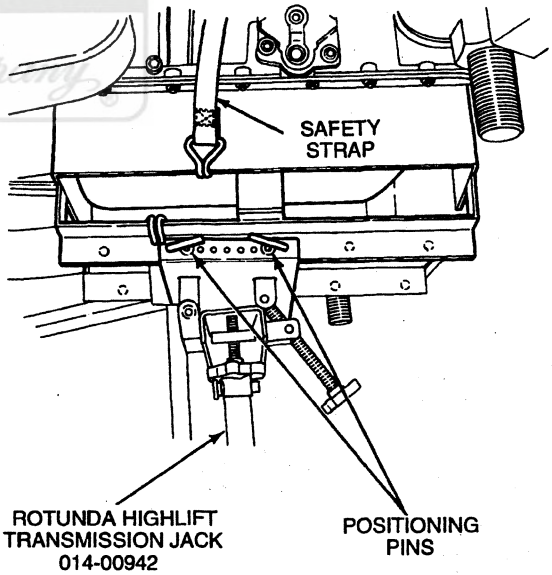

DD0626-B

Official Licensed Product Ford Motor Company

REMOVAL (Continued)

4x4 VEHICLES

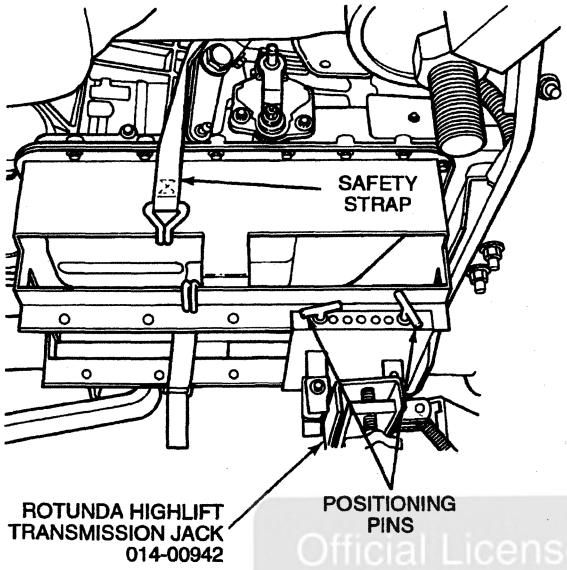

DD0627-B

22. Use a safety strap to secure transmission.
23. NOTE: Raise transmission, if necessary, to gain adequate clearance to remove transmission support crossmember.

    Remove the two transmission insulator and retainer-to-crossmember retaining nuts using an 18 mm socket. Remove rear engine support-to-frame bolts and remove transmission support crossmember from transmission.

Official Licensed Product
Ford Motor Company

REMOVAL (Continued)

Crossmember Installation, F-250 Heavy Duty, F-350 and F-Super Duty

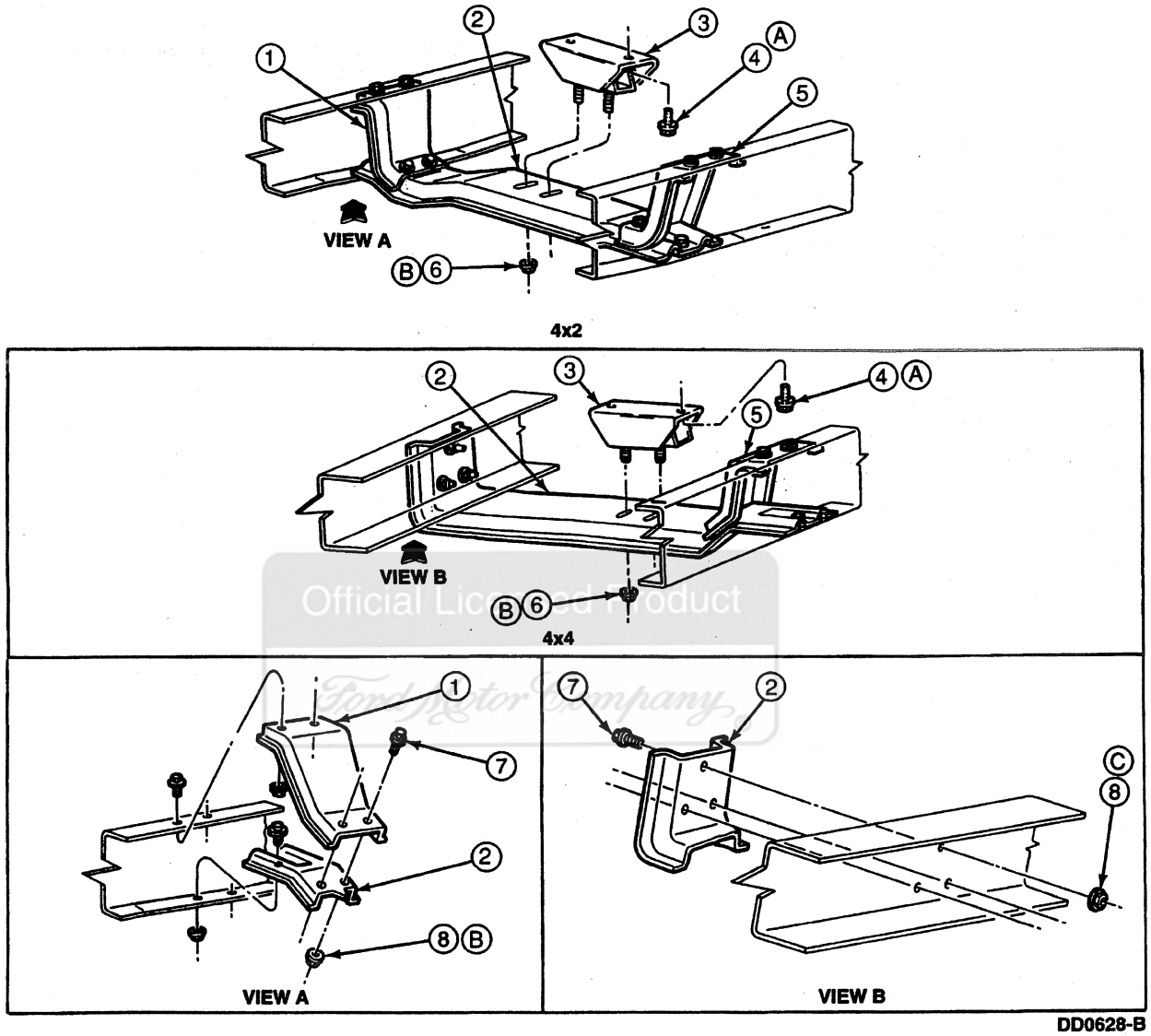

Item	Part Number	Description
1	6096	Rear Engine Support Bracket (RH)
2	6A023	Transmission Support Crossmember
3	60091	Insulator and Retainer
4	390066	Screw and Washer
5	6096	Rear Engine Support Bracket (LH)
6	N621945	Nut and Washer

(Continued)

Item	Part Number	Description
7	N802114	Bolt
8	N800937	Nut
A	—	Tighten to 81-108 N·m (60-80 Lb-Ft)
B	—	Tighten to 81-108 N·m (60-80 lb-ft) for All Except F-Super Duty. Tighten to 68-95 N·m (50-70 lb-ft) for F-Super Duty.
C	—	Tighten to 60-95 N·m (44-70 Lb-Ft)

REMOVAL (Continued)

24. NOTE: Hold the case connector fitting with a wrench to prevent it from moving when loosening tube nut.

    Using a flare nut wrench, remove transmission fluid cooler tubes from transmission case (7005). Cap transmission fluid cooler tubes and plug fittings at transmission.

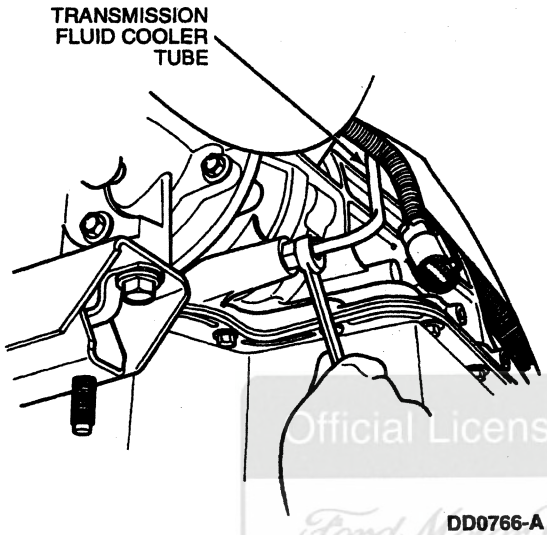

25. Remove transmission-to-engine bolts.
26. Back out transmission assembly from flywheel (6375) and lower gently while watching for any obstructions.

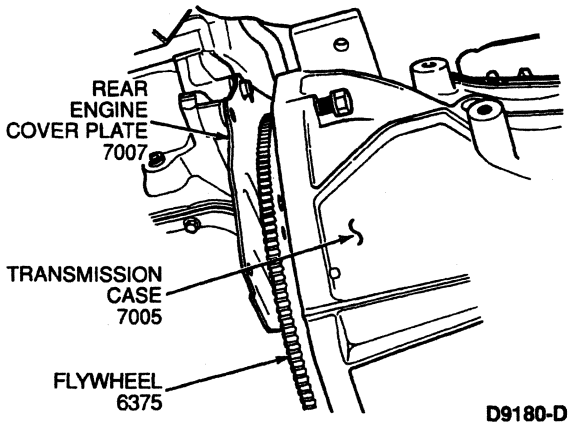

27. **CAUTION: Torque converter is very heavy.**

    NOTE: Fluid loss will occur when torque converter is removed.

    Install Torque Converter Handles T81P-7902-C on torque converter with handles in the 6 and 12 o'clock positions. Carefully remove torque converter from transmission by pulling evenly on handles.

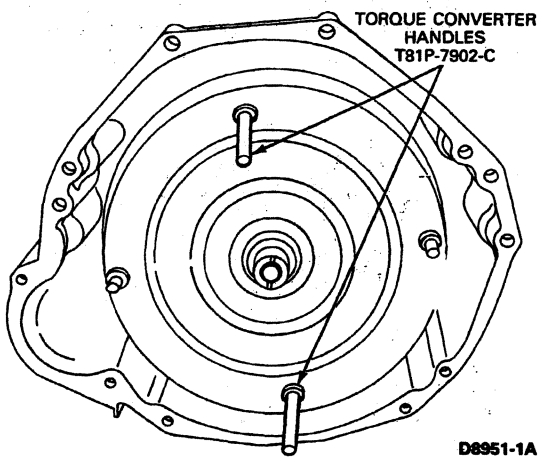

28. Remove fluid filler tube from fluid inlet short tube.
29. On 4x4 vehicles only, remove transfer case vent hose from detent bracket. Refer to Section 07-07B or Section 07-07C.
30. On 4x4 vehicles only, remove the transfer case from the transmission. Refer to Section 07-07B or Section 07-07C.

Official Licensed Product
Ford Motor Company

DISASSEMBLY

Transmission

Refer to the transmission disassembled view in the Description and Operation portion of this section.

NOTE: During disassembly and assembly of the transmission (7003), the "clock" numbers shown in the following illustrations will be referred to in order to reference the position in the transmission.

SPECIAL SERVICE TOOL(S) REQUIRED

Description	Tool Number
Pump Puller Adapter	T89T-70010-A
Impact Slide Hammer	T50T-100-A
Impact Slide Hammer	T59L-100-B
Clutch Spring Fixture	T89T-70010-C
Clutch Remover/Replacer	T89T-70010-E
Seal Remover	T74P-77248-A
Lock Nut Pin Remover	T78P-3504-N
Puller	T58L-101-B

DISASSEMBLY (Continued)

1. Mount transmission on Rotunda Car / Truck Engine Repair Stand 014-00106 or equivalent with the converter assembly removed.

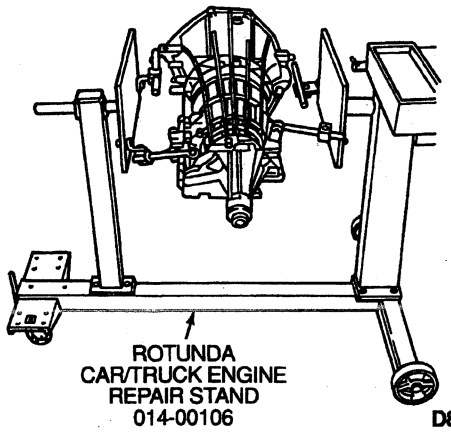

2. **CAUTION: The input shaft (7017) and overdrive planet assembly are serviced as mating components.**

   Remove input shaft from transmission.

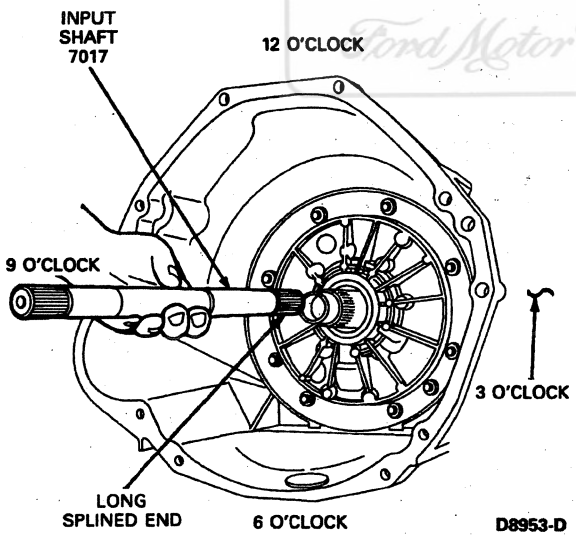

3. Remove 20 pan retaining bolts using a 10 mm socket. Remove the transmission pan.

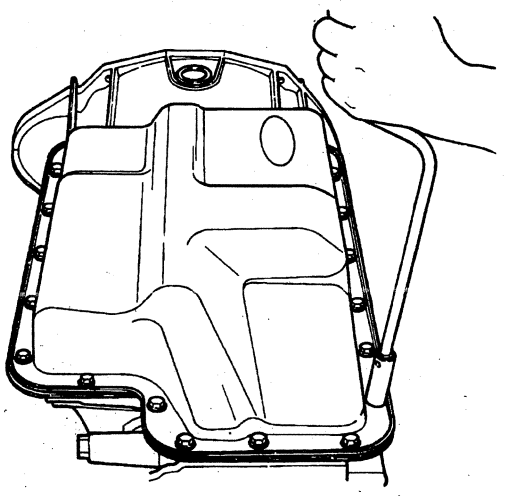

Official Licensed Product
Ford Motor Company

DISASSEMBLY (Continued)

4. **CAUTION: Cork gaskets and elastomeric gaskets are not interchangeable. If you remove a cork gasket, replace it with a cork gasket. If you remove an elastomeric gasket, clean, inspect and reuse unless gasket is damaged. Be careful not to cut or bend elastomeric gasket.**

   Remove, but do not discard, reusable elastomeric transmission pan gasket.

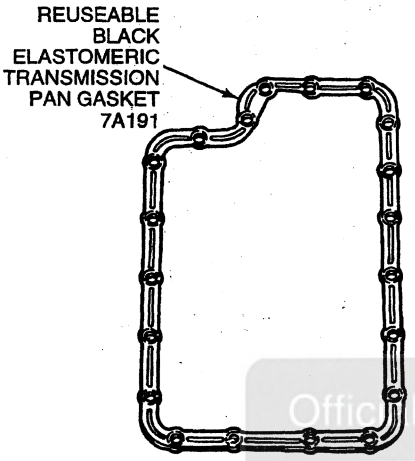

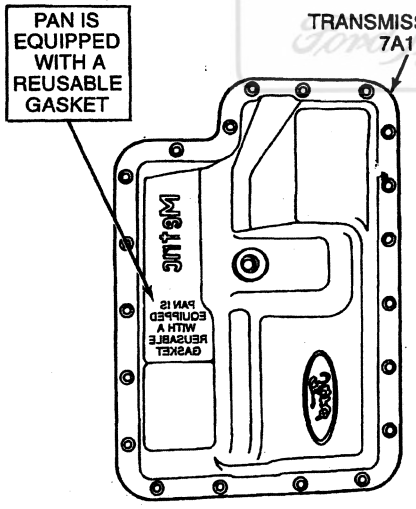

DD0611-B

5. **CAUTION: Use care not to scratch or damage aluminum pump bore.**

   NOTE: After removal, discard filter assembly and seal.

   Remove filter assembly and seal by carefully pulling and rotating filter as necessary. If seal remains in bore, carefully remove using a screwdriver.

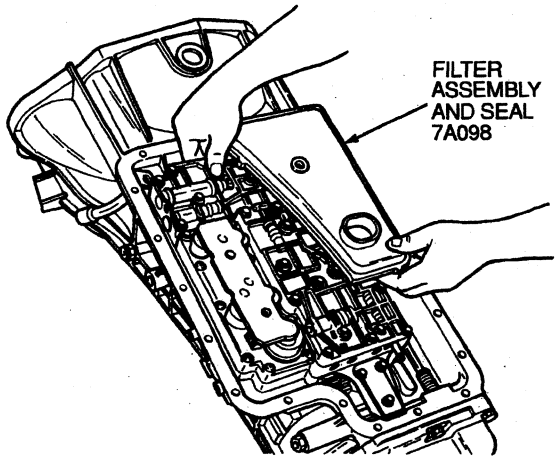

D8955-C

6. Remove 11 accumulator body assembly bolts using an 8 mm socket and two nuts using a 10 mm socket. Remove accumulator body assembly.

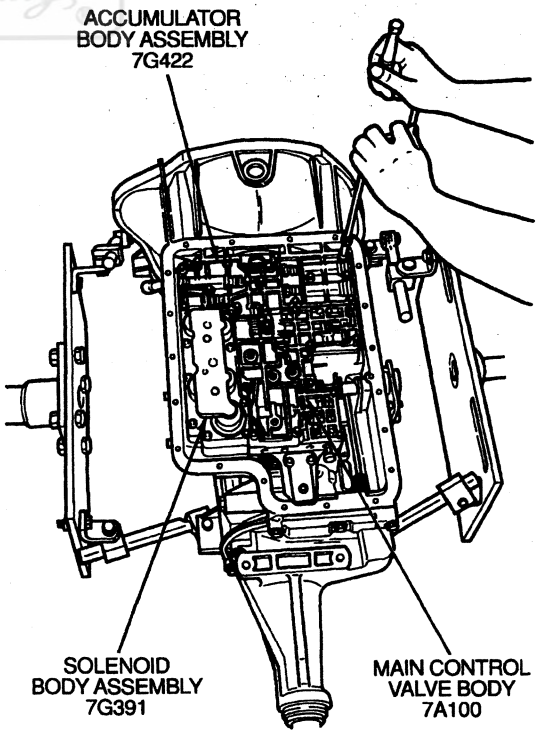

D8956-E

Official Licensed Product Ford Motor Company

DISASSEMBLY (Continued)

7. NOTE: Do not remove the two bolts shown. These two bolts hold the upper and lower main control valve bodies (7A100) together as an assembly.

   Remove 14 main control valve body bolts using an 8 mm socket. Remove two nuts using a 10 mm socket. Remove main control valve body.

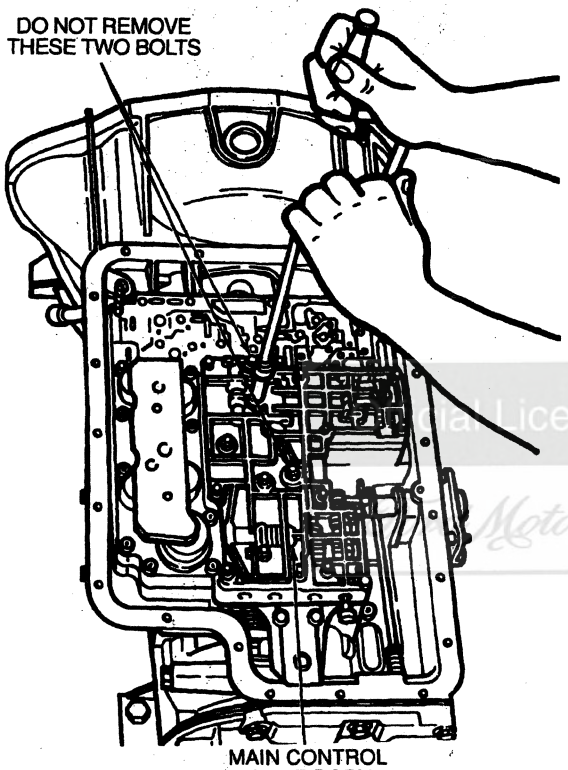

D8957-F

8. Remove nine solenoid body assembly bolts using a T30 Torx® bit and one nut using a 10 mm socket.

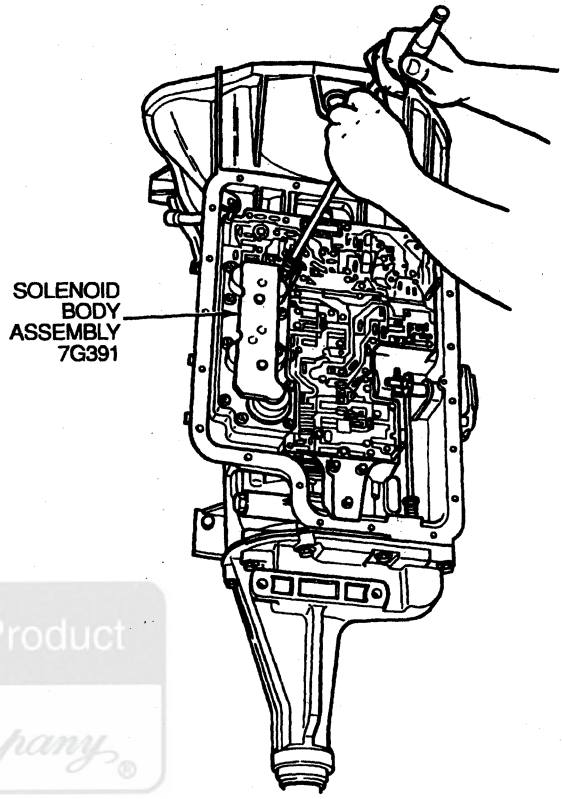

D8958-D

9. Push up on solenoid body assembly connector while removing solenoid body assembly.

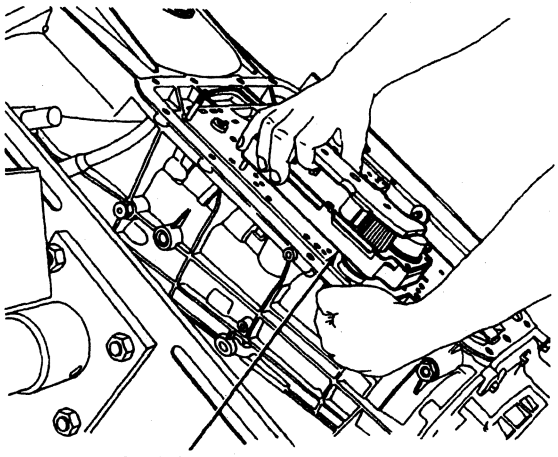

DD0767-A

Ford Licensed Product
Ford Motor Company

DISASSEMBLY (Continued)

10. Remove solenoid screen assembly by rotating and pulling out.

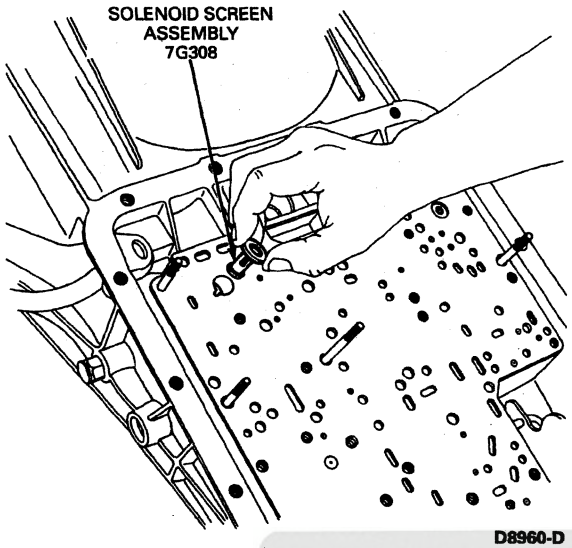

D8960-D

11. NOTE: Steel EPC check ball is spring loaded under valve body separator plate (7A008).

Remove three separator plate reinforcing plate bolts using an 8 mm socket. Remove separator plate reinforcing plate.

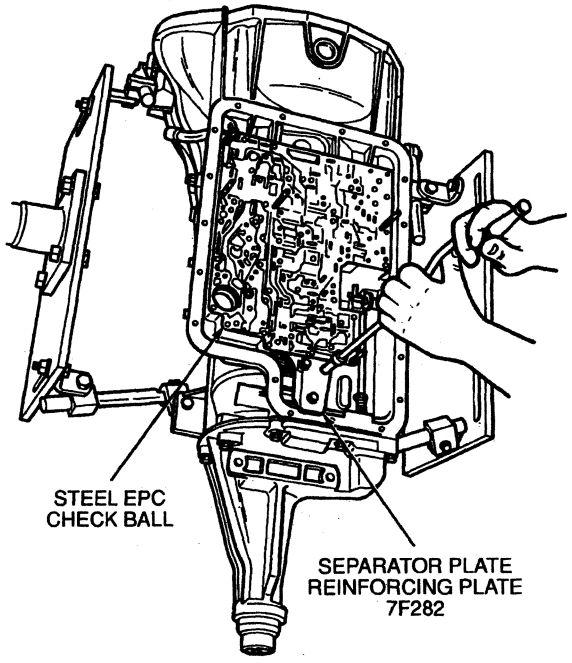

D8961-D

12. Remove valve body separator plate and two gaskets. Discard gaskets.

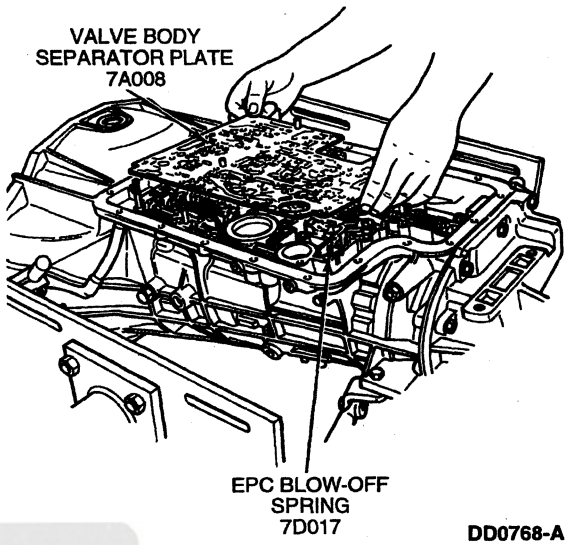

DD0768-A

13. NOTE: The steel EPC check ball has 6.35-mm (0.25-inch) diameter and is smaller than the other check balls.

Remove steel EPC check ball and spring assembly.

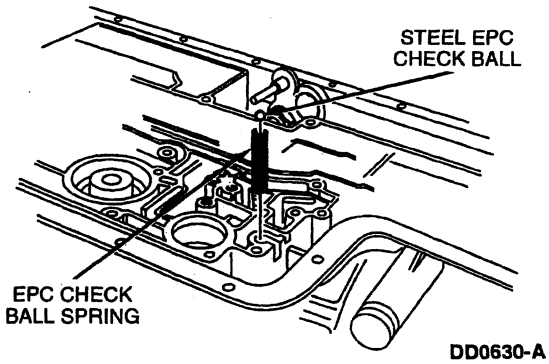

DD0630-A

Official Licensed Product
Ford Motor Company

DISASSEMBLY (Continued)

14. **CAUTION: Use care not to damage rubber check balls.**

    Remove eight rubber check balls from transmission, using a small screwdriver.

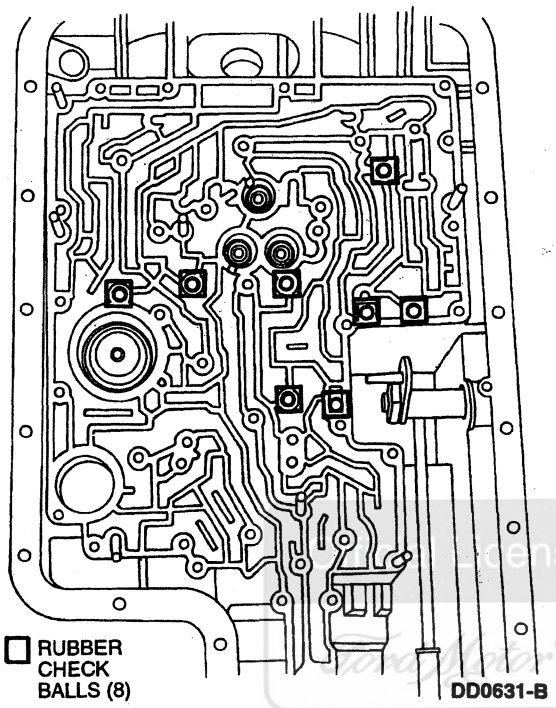

15. **WARNING: INTERMEDIATE BAND SERVO ASSEMBLY CAN COME APART AND POP OUT OF THE CASE BORE.**

    CAUTION: Tap gently on intermediate band servo assembly piston.

    Using a plastic- or rubber-headed hammer, tap gently on the intermediate band servo assembly piston. The downward force will compress the spring. The upward momentum of the spring will force the assembly to be released from the case bore.

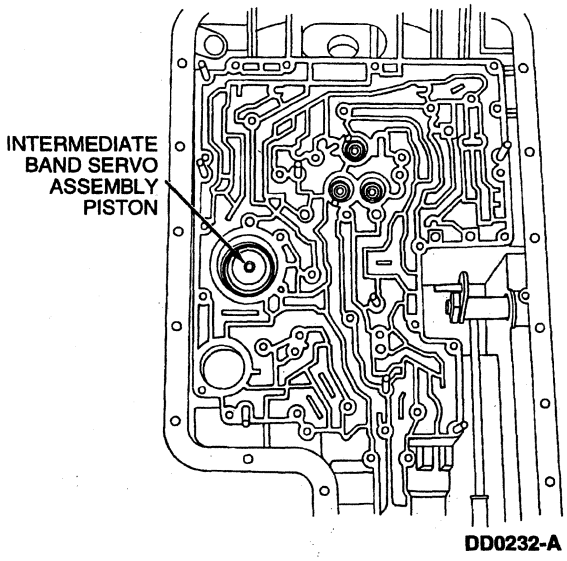

Ford Licensed Product
Ford Motor Company

DISASSEMBLY (Continued)

16. **CAUTION: Discard feedbolts after removal.**
Remove three feedbolts using a 13 mm socket. Discard feedbolts.

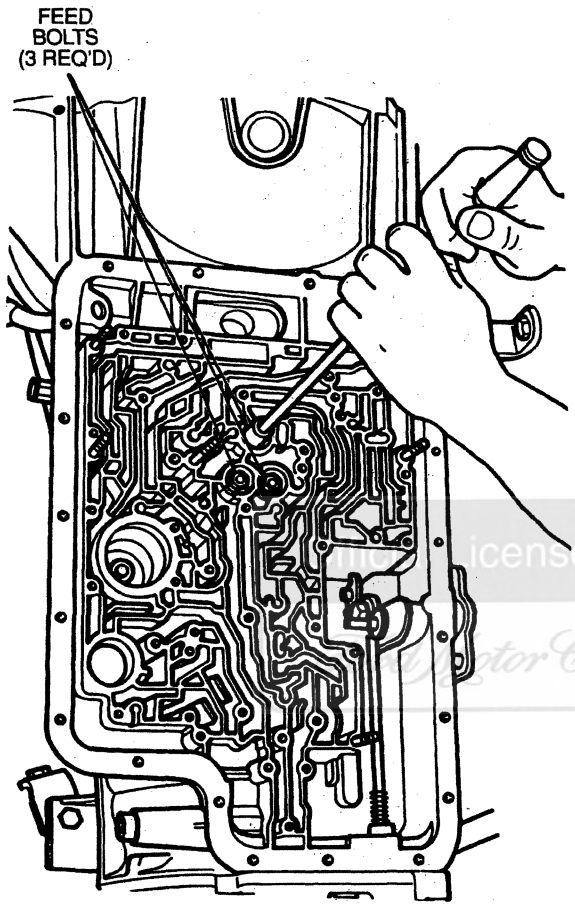

D8966-D

17. **CAUTION: Discard pump bolt washers after removal. Do not reuse.**
Remove nine pump bolts using a 10 mm socket.

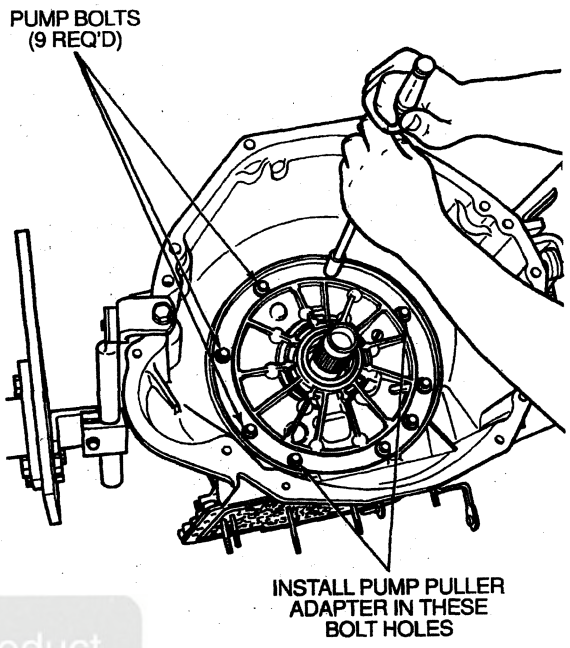

D8967-B

18. Use two threaded holes in pump and install Pump Puller Adapter T89T-70010-A. Install Impact Slide Hammer T59L-100-B into adapter and remove front pump assembly. Use slide hammer-type puller only.

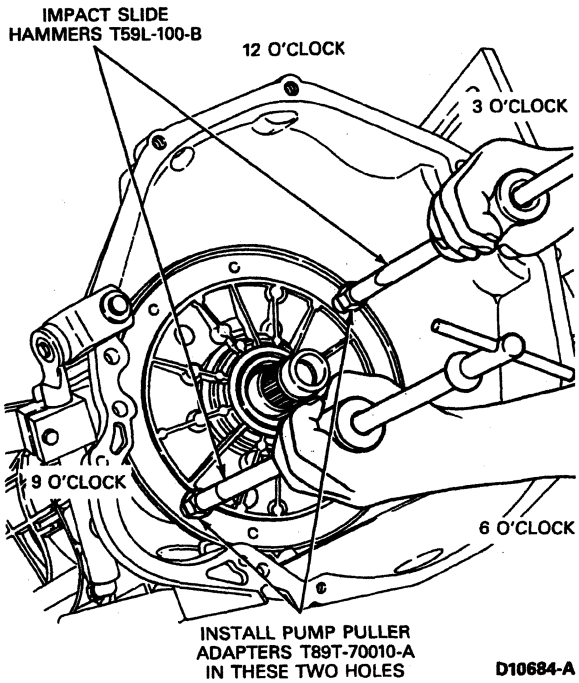

D10684-A

DISASSEMBLY (Continued)

19. NOTE: No. 1 pump thrust washer and No. 2A overdrive sun gear thrust bearing may stay with pump.

    Remove pump gasket and No. 1 pump thrust washer. Discard pump gasket. Remove No. 2A overdrive sun gear thrust bearing between front pump assembly and overdrive sun gear (7D063).

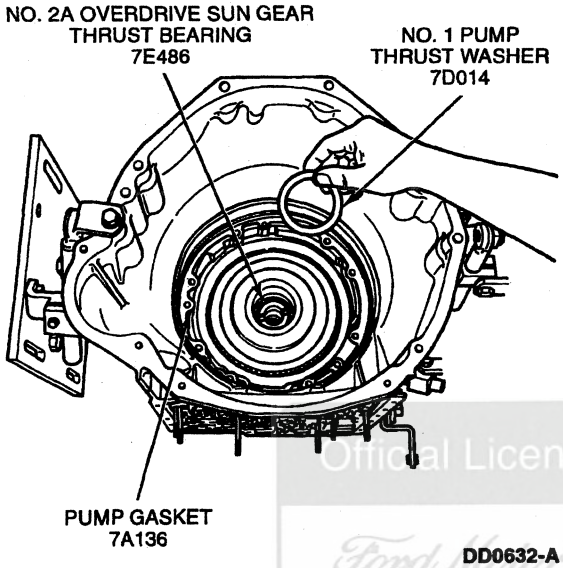

DD0632-A

20. NOTE: Overdrive sun gear might stay with coast clutch or overdrive planet assembly.

    Lift out the coast clutch assembly.

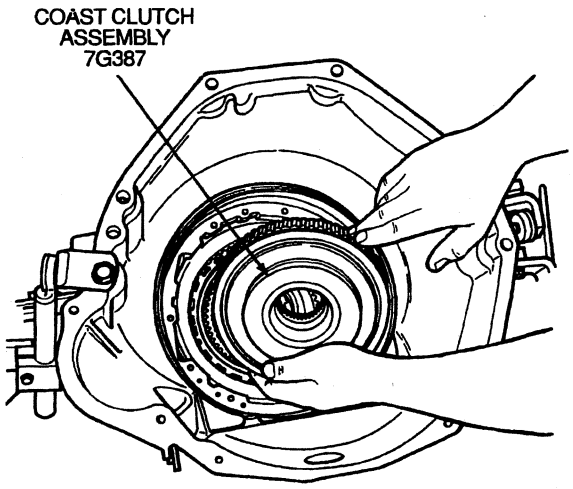

D8970-C

21. Remove overdrive clutch pressure plate retainer snap ring using large screwdriver.

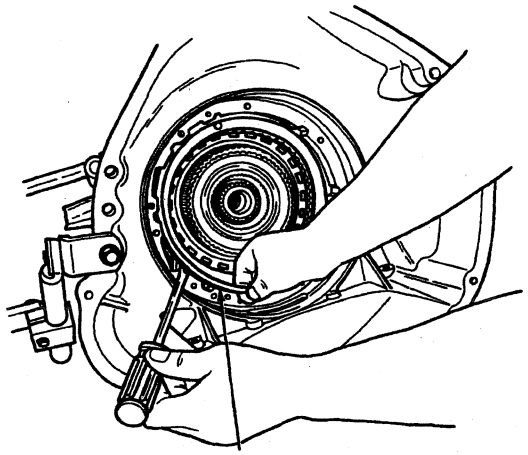

D8972-C

22. Remove overdrive clutch pressure plate and clutch pack and tag for reassembly.

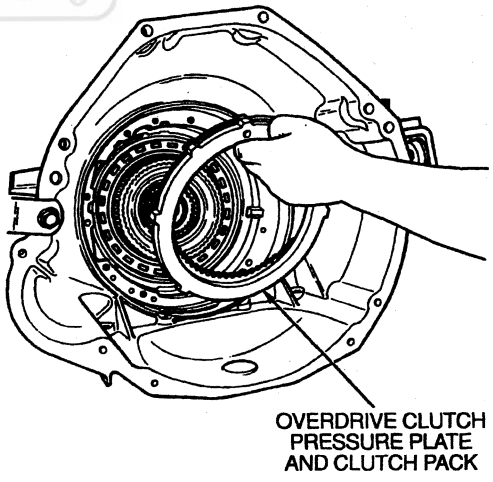

D8973-B

Official Licensed Product
Ford Motor Company

DISASSEMBLY (Continued)

23. Remove overdrive ring gear and overdrive center shaft assembly, overdrive planet and one-way clutch and No. 5 overdrive center shaft thrust bearing assembly.

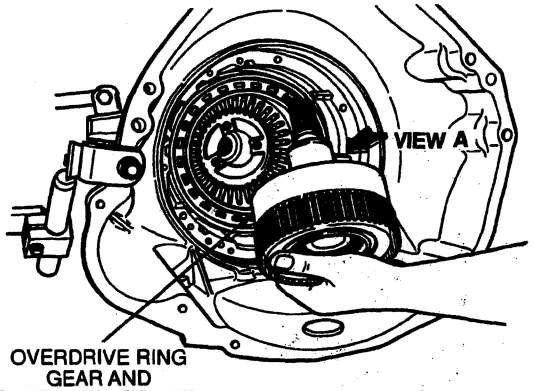

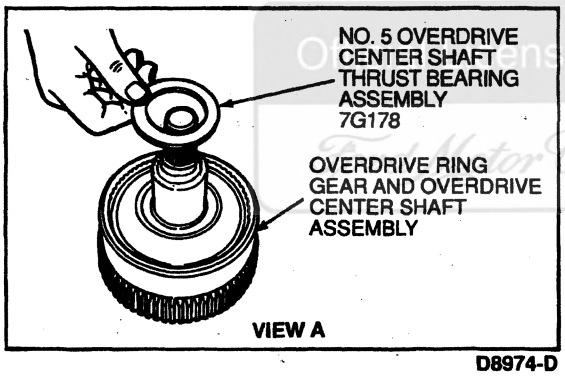

D8974-D

24. Install Clutch Spring Fixture T89T-70010-C onto intermediate / overdrive cylinder assembly. Tighten center bolt to 7 N·m (65 lb-in).

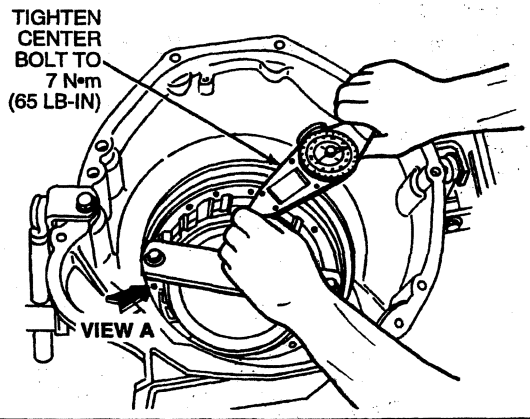

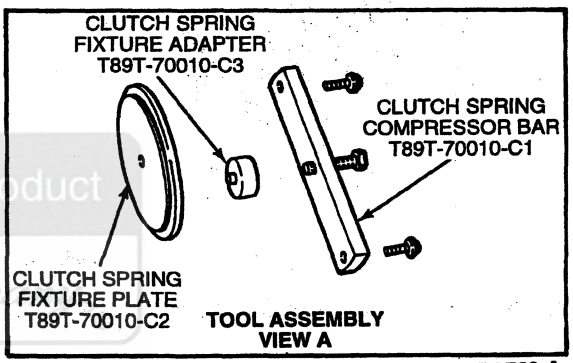

DD0769-A

25. Remove intermediate / overdrive cylinder retainer snap ring with large screwdriver. Loosen spring compressor center bolt and remove compressor tools.

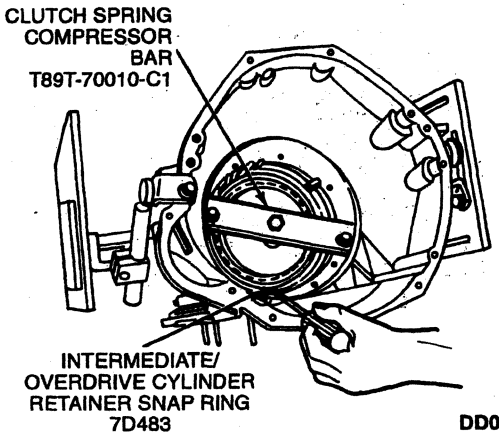

DD0653-A

DISASSEMBLY (Continued)

26. **CAUTION: During removal, do not misalign the intermediate/overdrive cylinder assembly in the case bore. This can damage the case bore.**

    Remove intermediate/overdrive cylinder assembly.

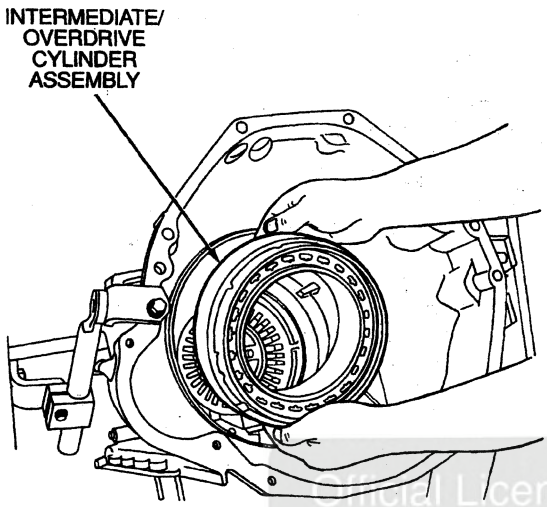

D8977-B

27. Remove intermediate clutch piston return spring.

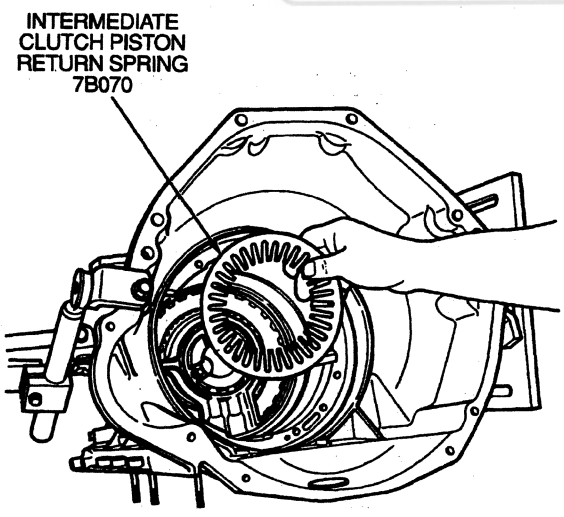

D8978-B

28. **CAUTION: During removal, do not misalign the center support in the case bore. This can cause damage to the case bore.**

    Carefully remove center support assembly.

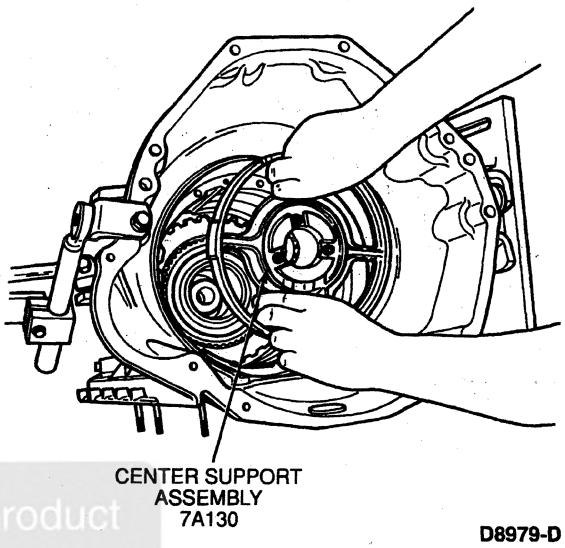

D8979-D

29. Remove No. 6 center support thrust washer (7L326).

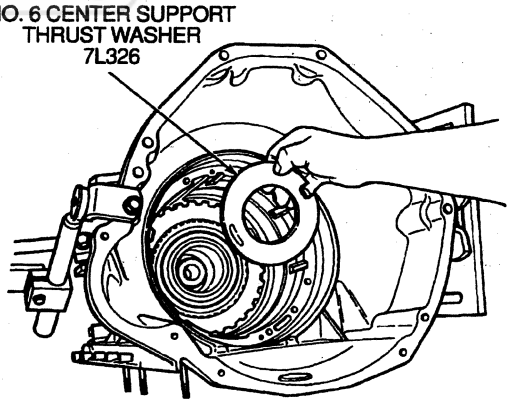

D8980-D

Official Licensed Product
Ford Motor Company

DISASSEMBLY (Continued)

30. Remove front intermediate clutch pressure apply plate, intermediate clutch pack and intermediate clutch rear pressure plate. Tag for proper reassembly.

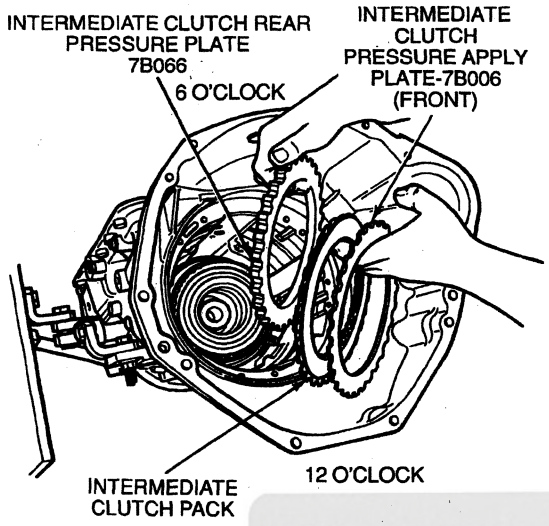

DD0770-A

31. Remove intermediate band.

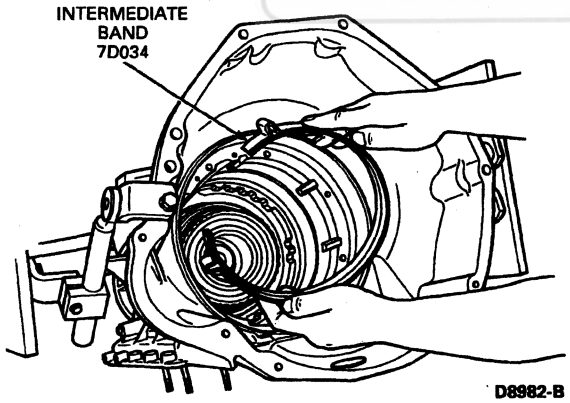

D8982-B

32. NOTE: Hooks on crossbar must be rotated to engage notches on input shell. Refer to illustration.

    Using Clutch Remover / Replacer T89T-70010-E, lift upward and remove direct clutch, forward clutch and input shell.

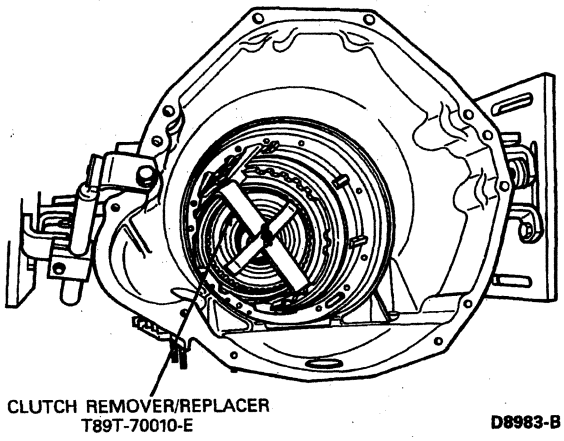

D8983-B

33. Using large screwdriver, remove reverse planet retaining ring.

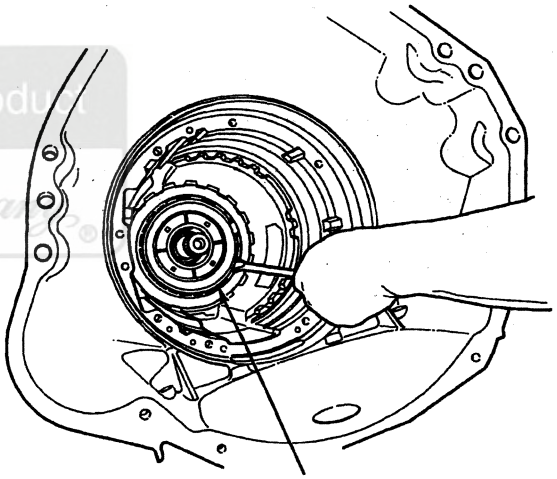

D8984-C

Official Licensed Product
Ford Motor Company

DISASSEMBLY (Continued)

34. Remove reverse planet (7D006) assembly and No. 10B and No. 11 reverse planet carrier thrust washers.

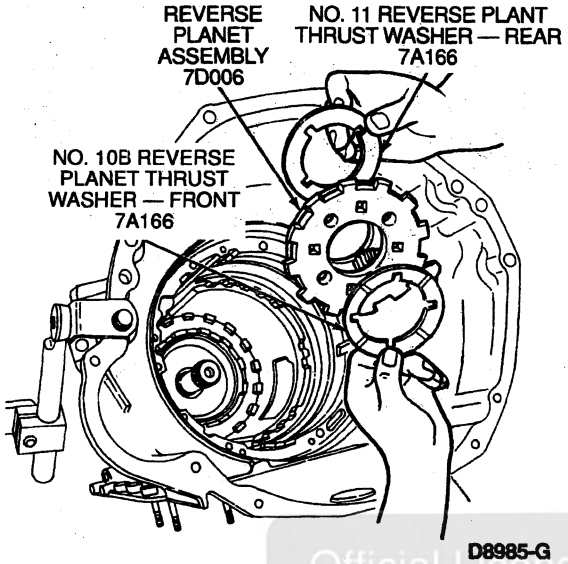

35. **WARNING: USE CARE WHEN REMOVING THE OUTPUT SHAFT RETAINING RING. THE OUTPUT SHAFT (7060) CAN FALL OUT. DO NOT REUSE THE OUTPUT SHAFT RETAINING RING.**

    Using retaining ring pliers, remove the output shaft retaining ring.

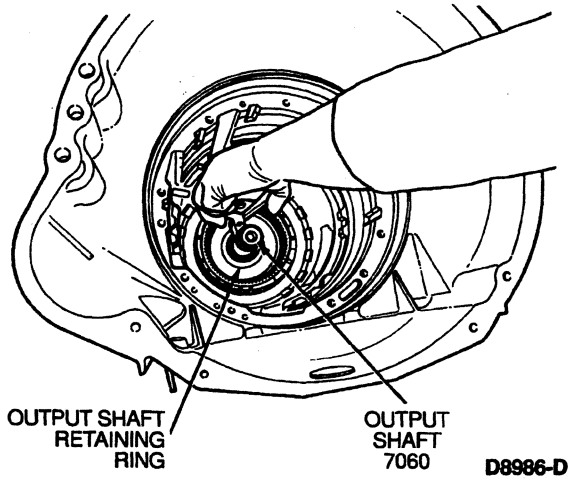

36. Remove output shaft ring gear, reverse clutch hub, low one-way clutch assembly and No. 12 thrust bearing.

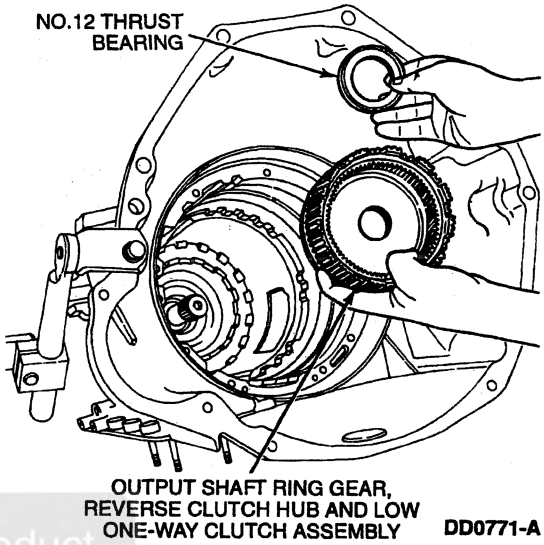

37. Using a large screwdriver remove reverse clutch pressure plate retaining ring.

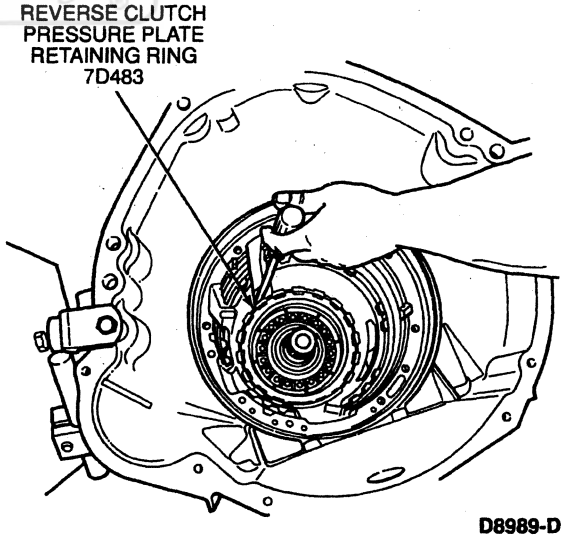

38. **CAUTION: Use care not to drop output shaft while rotating transmission.**

    Rotate transmission so that transmission fluid pan rail surface is facing up.

Official Licensed Product

DISASSEMBLY (Continued)

39. Remove reverse clutch pressure plate and clutch pack and cushion spring. Tag for reassembly.

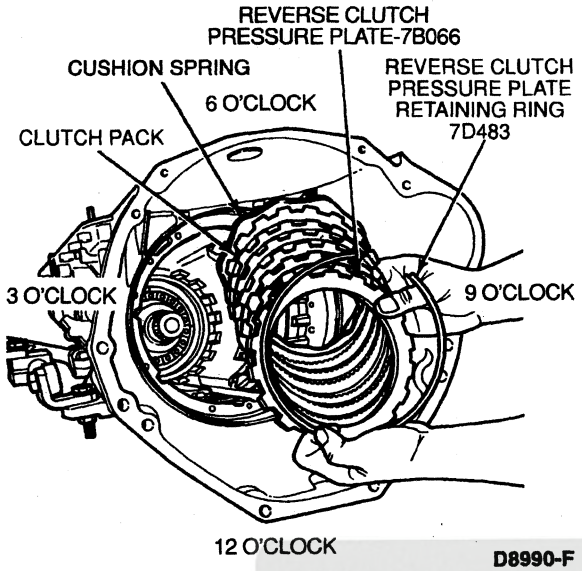

D8990-F

40. Using Seal Remover T74P-77248-A and Impact Slide Hammer T50T-100-A remove extension housing seal.

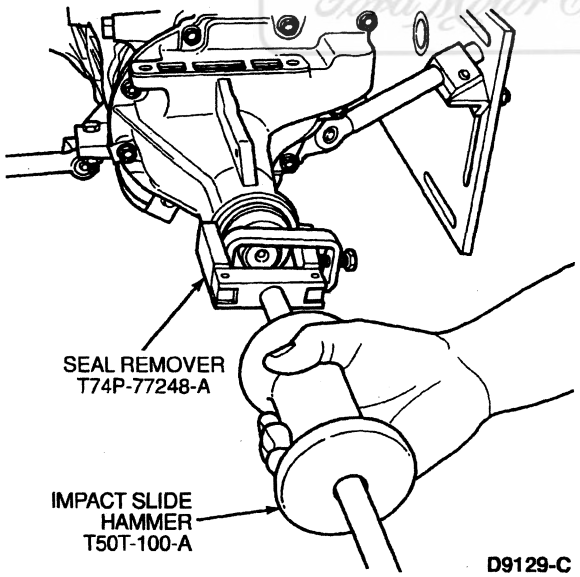

D9129-C

41. Remove nine extension housing bolts using a 13 mm socket. Remove wiring bracket, extension housing (7A039) and extension housing gasket.

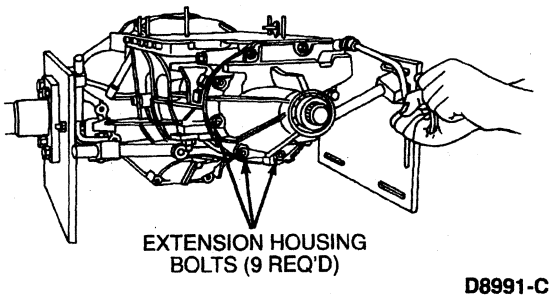

D8991-C

42. Remove output shaft, park gear (7A233) and No. 13 parking gear thrust washer.

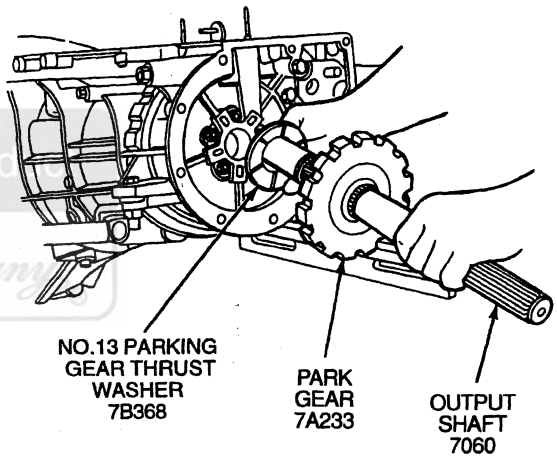

DD0772-A

43. Using a 7 / 16-inch socket, remove five bolts retaining the low / reverse one-way clutch inner race to the case.

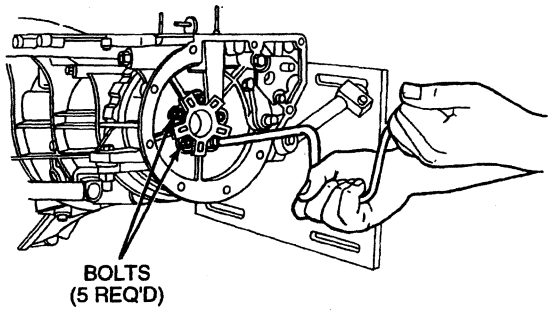

DD0773-A

Official Licensed Product
Ford Motor Company

DISASSEMBLY (Continued)

44. Remove reverse clutch return spring assembly and the low / reverse one-way clutch inner race.

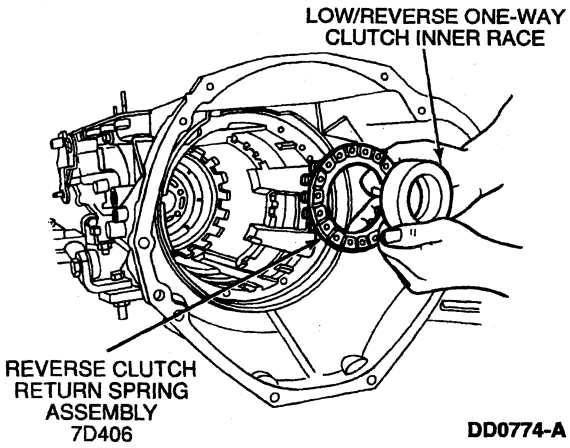

45. Reinstall reverse clutch pressure plate and reverse clutch pressure plate retaining ring to restrain the reverse clutch piston (7D402) during removal.

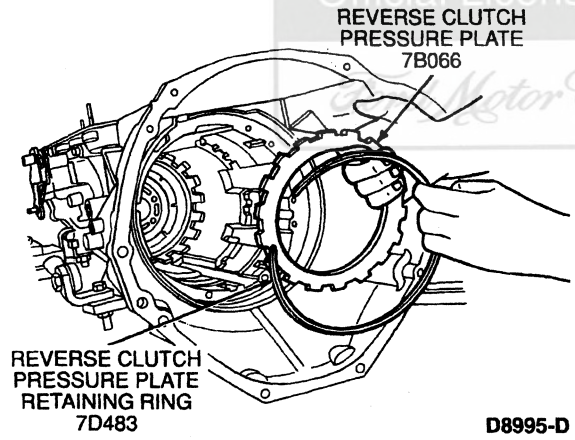

46. Blow into reverse clutch feed port using compressed air. This will blow out the reverse clutch piston against the reverse clutch pressure plate.

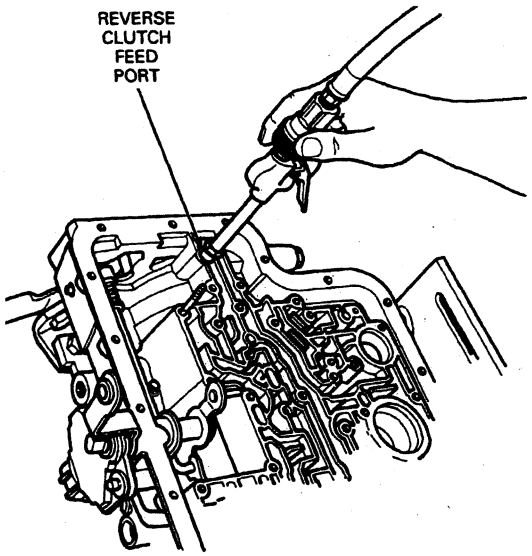

47. Remove reverse clutch pressure plate retaining ring, reverse clutch pressure plate and reverse clutch piston from case (7005).

48. Remove two parking rod guide plate bolts using 13 mm socket. Remove the parking rod guide plate.

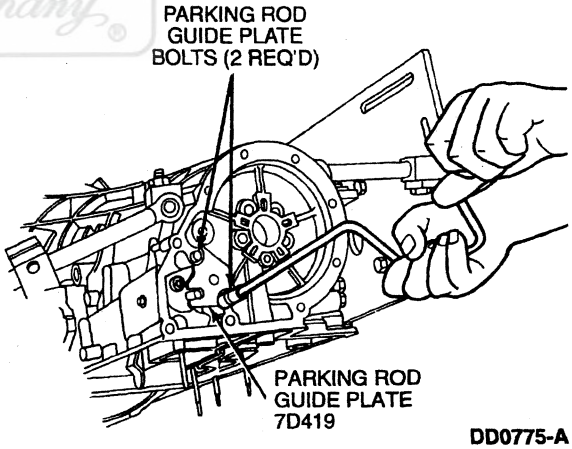

Official Licensed Product Ford Motor Company

DISASSEMBLY (Continued)

49. Remove parking pawl return spring (7D070), parking pawl (7A441) and parking pawl shaft (7D071) from case.

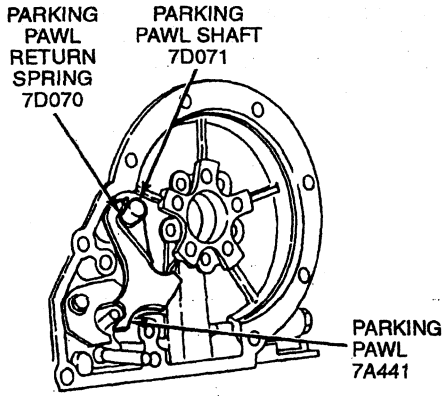

D8997-F

50. **CAUTION: The Torx® head screw has a thread-locking compound and should be removed only if the case is being replaced. If screw is removed, it must be discarded and a new one installed.**

    If required, remove the Torx® head screw using a T40 bit and remove parking pawl abutment.

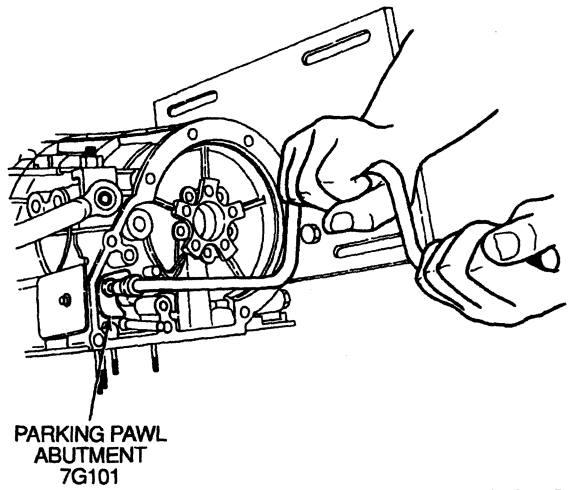

D8999-B

51. NOTE: A Number 53 drill bit (1/16-inch) can be used as an alternate method to remove the manual lever shaft retaining pin (7B210).

    Remove manual lever shaft retaining pin using Lock Nut Pin Remover T78P-3504-N.

52. Remove inner manual valve detent lever nut using a 21 mm box wrench while holding manual control lever (7A256) with a crescent wrench.

53. Remove inner manual valve detent lever (7A115) and parking pawl actuating rod from manual control lever shaft (7C493).

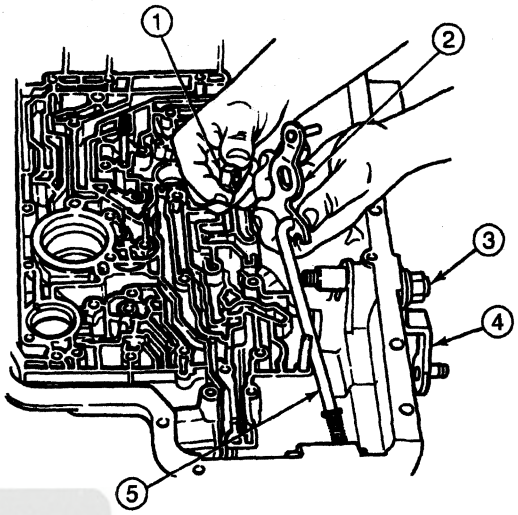

D10680-D

Item	Part Number	Description
1	N800287-S36	Inner Manual Valve Detent Lever Nut
2	7A115	Inner Manual Valve Detent Lever
3	N620482-S2	Outer Manual Control Lever Nut
4	7A256	Outer Manual Control Lever
5	7A232	Parking Pawl Actuating Rod

54. **CAUTION: Discard outer manual control lever shaft nut. Do not reuse.**

    Remove the outer manual control lever shaft nut using a 15 mm socket while holding outer manual control lever with crescent wrench.

55. Remove outer manual control lever.

56. Remove two transmission range (TR) sensor bolts and washers using an 8 mm socket and remove TR sensor.

57. **CAUTION: Use care not to damage the manual control lever bore.**

    Remove manual control lever shaft.

58. Remove bolt and manual control valve detent lever spring (7A261).

Official Licensed Product
Ford Motor Company®

DISASSEMBLY (Continued)

59. Remove manual control lever seal using Puller T58L-101-B.

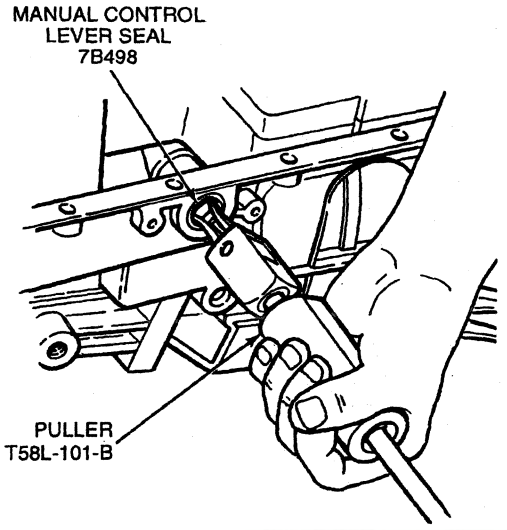

DD0633-A

60. NOTE: Remove the short fluid inlet tube only if it is loose or damaged.

    If necessary, remove short fluid inlet tube, using channel lock pliers.

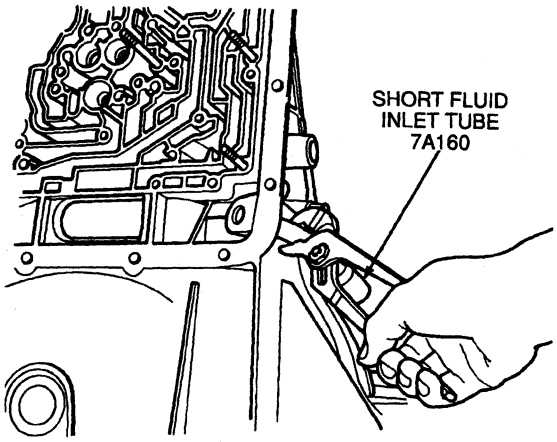

D9006-C

Disassembly / Reassembly of Subassemblies

Front and Rear Case Bushings

Disassembly and Assembly

NOTE: Inspect case bushing bores for nicks or burrs. Remove any minor nicks or burrs using a fine oil stone. Remove case bushings only if they show signs of excessive wear or scoring.

SPECIAL SERVICE TOOL(S) REQUIRED

Description	Tool Number
Impact Slide Hammer	T50T-100-A
Rear Case Bushing Replacer	T92T-77110-AH
Threaded Drawbar	T77F-1176-A

1. **CAUTION: Be careful not to damage the case bore while removing the bushing.**

   NOTE: Remove and replace only one bushing at a time while using the other bushing in the case (7005) to help align the tool and bushing during installation. Always replace both bushings when either bushing is replaced.

   Remove the rear case bushing only using Seal Remover TOOL-1175-AC or equivalent and Impact Slide Hammer T50T-100-A as shown.

Ford Motor Company

DISASSEMBLY (Continued)

Rear Case Bushing Removal

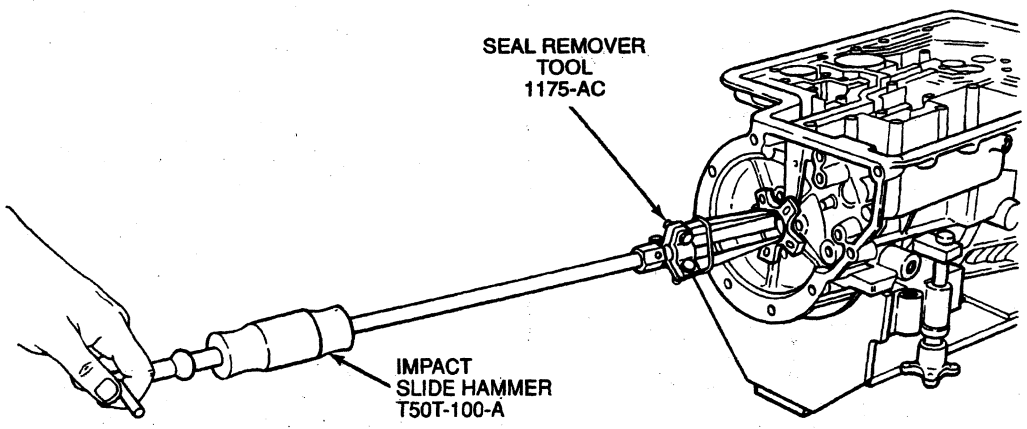

D11844-C

2. NOTE: The rear case bushing has one lube groove. The front case bushing has three lube grooves.

   Using Rear Case Bushing Replacer T92T-77110-AH, place the rear case bushing on the portion of the tool as shown.

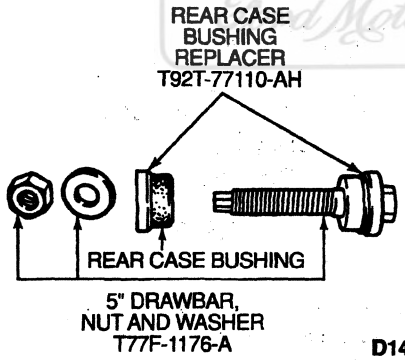

D14267-A

3. Place the remaining portion of Rear Case Bushing Replacer T92T-77110-AH and 127-mm (5-inch) Threaded Drawbar T77F-1176-A through the front of the case into the front case bushing as shown.

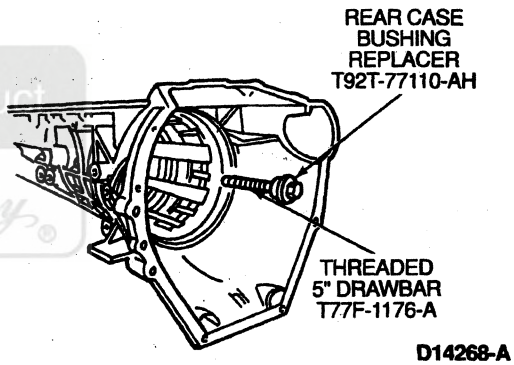

D14268-A

4. **CAUTION: Make sure the bushing and tool are centered in the bore.**

   Place the portion of the tool with the rear case bushing into the rear of the case over the drawbar as shown. Attach washer and nut to drawbar and hand-tighten.

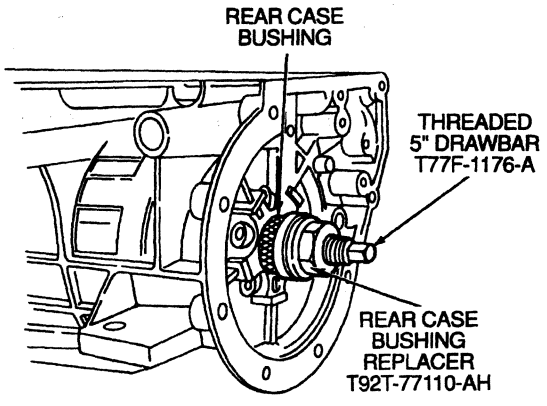

D14269-B

Licensed Product
Ford Motor Company

DISASSEMBLY (Continued)

5. Hold the drawbar with a 1/2-inch wrench, while turning the nut with a 1-1/8-inch wrench as shown.
   a. Turn the nut until the rear case bushing is fully seated.
   b. Unscrew the nut and remove all tools.

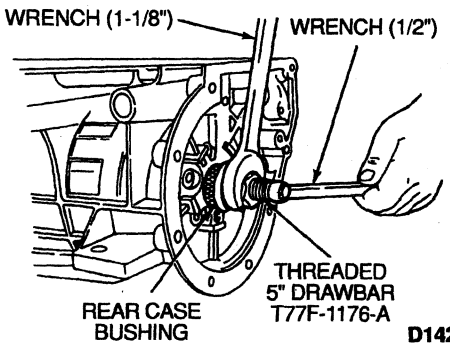

D14270-A

6. Remove the front case bushing using Seal Remover TOOL-1175-AC or equivalent and Impact Slide Hammer T50T-100A as shown.

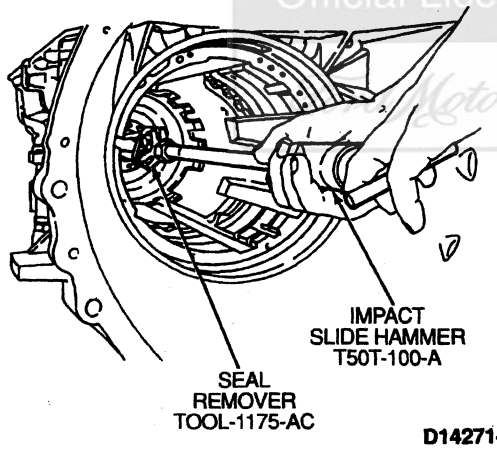

D14271-A

7. NOTE: The front case bushing has three lube grooves. The rear case bushing has one lube groove.

   Using Rear Case Bushing Replacer T92T-77110-AH, place the front case bushing on the portion of tool as shown.

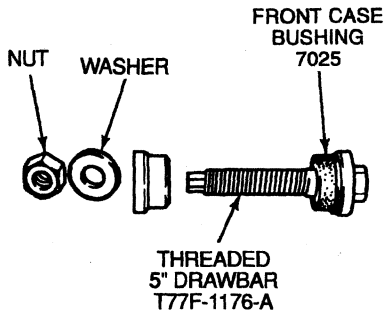

D14272-B

8. Set portion of tool with front case bushing and drawbar into bushing bore from the front as shown in the following illustration.
9. **CAUTION: Make sure the bushing and tool are centered in the bore.**

   Place the remaining portion of Rear Case Bushing Replacer T92T-77110-AH into the rear bushing in the case as a guide. Install washer and nut and hand-tighten.

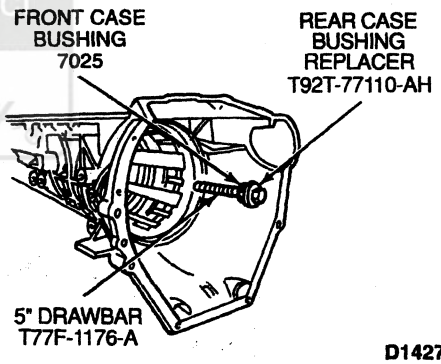

D14273-B

10. Hold the drawbar with a 1/2-inch wrench, while turning the nut with a 1-1/8-inch wrench as shown.
    a. Turn the nut until the front case bushing is fully seated.

Official Licensed Product Ford Motor Company

DISASSEMBLY (Continued)

b. Unscrew the nut and remove all tools.

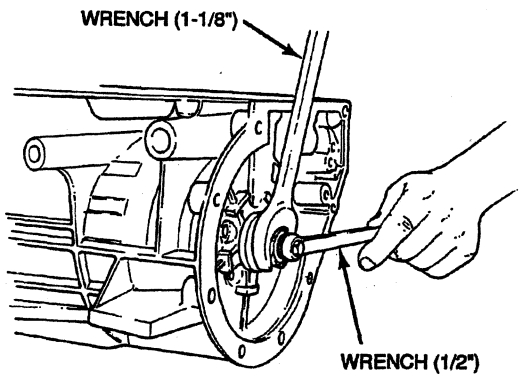

TB-3097-A

Official Licensed Product
Ford Motor Company

Main Control Valve Body

1. Thoroughly clean all parts, except non-metallic check balls, in clean solvent and blow dry with moisture-free compressed air.
2. Inspect all valve and plunger bores for scores. Check all fluid passages for obstructions. Inspect all mating surfaces for burrs and scores. If damaged, replace the main control valve body (7A100).
3. Inspect all springs for distortion. Check all valves and plungers for free movement in their respective bores when dry.
4. Roll the valves on a flat surface to check for bent condition.

DISASSEMBLY (Continued)

Upper, Lower, Accumulator and Solenoid Bodies, Disassembled View

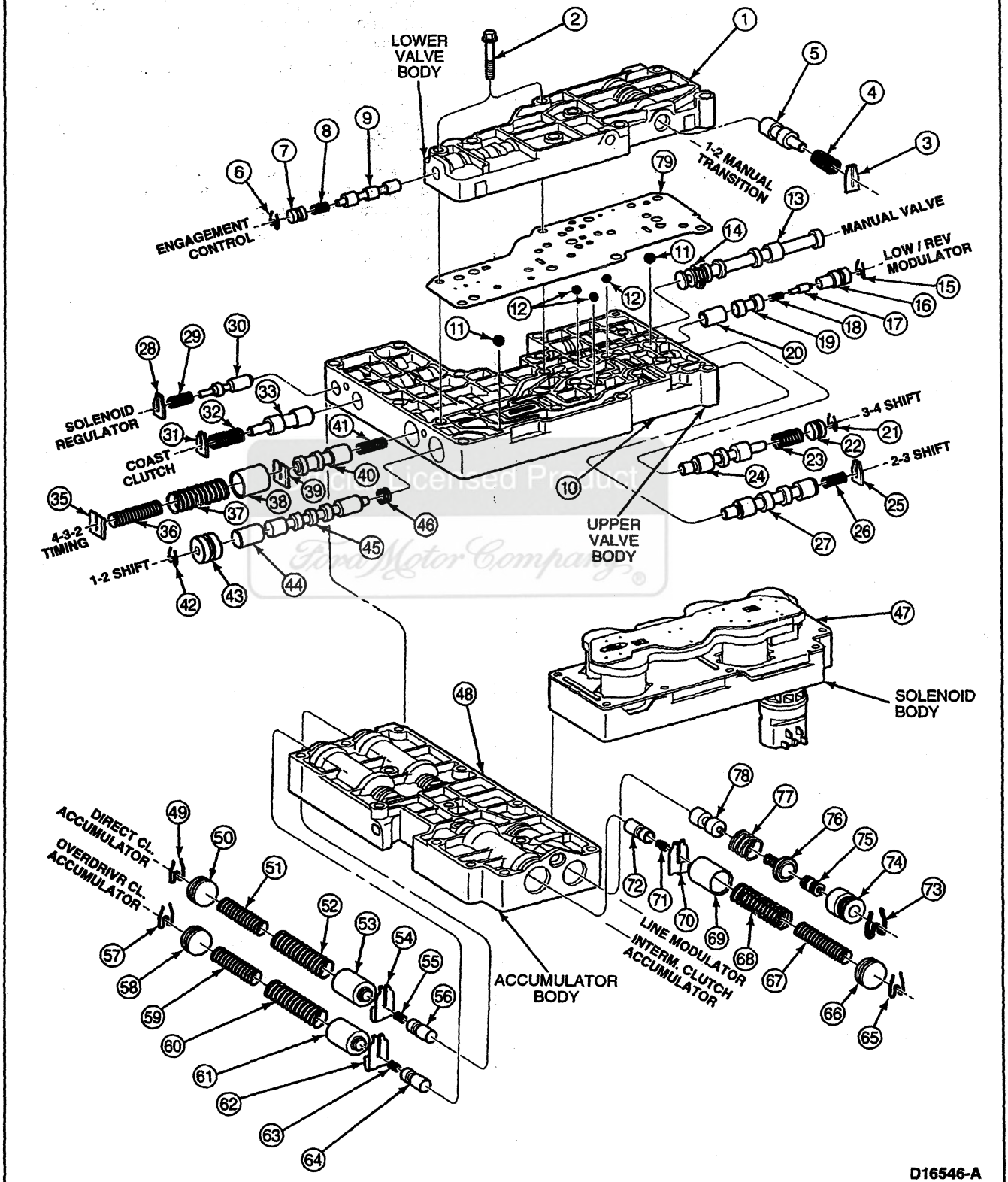

Unlicensed Product Ford Motor Company

DISASSEMBLY (Continued)

Item	Part Number	Description
1	—	Body Control Valve — Lower
2	—	Bolt M1-1x36 Hex Flange Head (2 Req'd)
3	—	Plate, Spring Retaining
4	—	Spring, Shift Valve
5	—	Valve, Manual 1-2 Transmission
6	—	Retainer
7	—	Plug, Valve Retainer
8	—	Spring, Engagement Valve
9	—	Valve, Control Engagement
10	—	Body, Control Valve — Upper
11	—	Ball, 5/16-Inch Shuttle
12	—	Ball, 1/4-Inch Shuttle
13	—	Valve, Control Manual
14	—	Ring, Retaining
15	—	Retainer
16	—	Sleeve, Low/Reverse Modulator Valve
17	—	Plunger, Low/Reverse Modulator Valve
18	—	Spring, Low Servo Modulator
19	—	Valve, Low Servo Modulator
20	—	Valve, Low/Reverse Modulator
21	—	Retainer
22	—	Plug, Valve Retaining
23	—	Spring, Shift Valve
24	—	Valve, 3-4 Shift
25	—	Plate, Spring Retaining
26	—	Spring, 2-3 Shift Valve
27	—	Valve, 2-3 Shift
28	—	Plate, Spring Retaining
29	—	Spring Solenoid Regulator Valve
30	—	Solenoid, Regulator Valve
31	—	Plate, Spring Retaining
32	—	Spring, Shift Valve
33	—	Valve, Coast Clutch Shift
35	—	Plate, Spring Retaining
36	—	Spring, 4-3-2 Shift Timing
37	—	Spring, 4-3-2 Shift Timing
38	—	Plunger, Control Valve Shift Timing
39	—	Plate, Spring Retaining
40	—	Valve, 4-3-2 Timing
41	—	Spring, 4-3-2 Shift Timing
42	—	Retainer
43	—	Plug, Valve Retaining

(Continued)

Item	Part Number	Description
44	—	Valve, 1-2 Shift
45	—	Valve, Drive 2
46	—	Spring, 1-2 Shift Valve
47	7G391	Solenoid Body Assy
48	7G422	Accumulator Valve Body Control
49	—	Retainer
50	—	Plug, Valve Retainer
51	—	Spring, Accumulator Valve — Inner
52	—	Spring, Accumulator Valve — Outer
53	—	Plunger, Accumulator Regulator
54	—	Retainer, Accumulator Spring
55	—	Spring, Accumulator Regulator Valve
56	—	Valve, Accumulator Regulator
57	—	Retainer
58	—	Plug, Valve Retaining
59	—	Spring, Accumulator Valve — Inner
60	—	Spring, Accumulator Valve — Outer
61	—	Plunger, Accumulator Regulator
62	—	Retainer, Accumulator Spring
63	—	Spring, Accumulator Regulator Valve
64	—	Valve, Accumulator Regulator
65	—	Retainer
66	—	Plug, Valve Retaining
67	—	Spring, Accumulator Valve — Inner
68	—	Spring, Accumulator Valve — Outer
69	—	Plunger, Accumulator Regulator
70	—	Retainer, Accumulator Spring
71	—	Spring, Accumulator Regulator Valve
72	—	Valve, Accumulator Regulator
73	—	Retainer
74	—	Sleeve, Line Press Modulator
75	—	Plunger, Line Press Modulator

(Continued)

Licensed Product

DISASSEMBLY (Continued)

Item	Part Number	Description
76	—	Spring and Retainer Assy, Press Modulator
77	—	Spring, Throttle Press Line Modulator

(Continued)

Item	Part Number	Description
78	—	Valve, Line Press Modulator
79	7A008	Control Valve Body Separator Plate

Pump Assembly

SPECIAL SERVICE TOOL(S) REQUIRED

Description	Tool Number
Impact Slide Hammer	T59L-100-B
Front Pump Seal Replacer	T63L-77837-A

Pump Assembly, Disassembled View

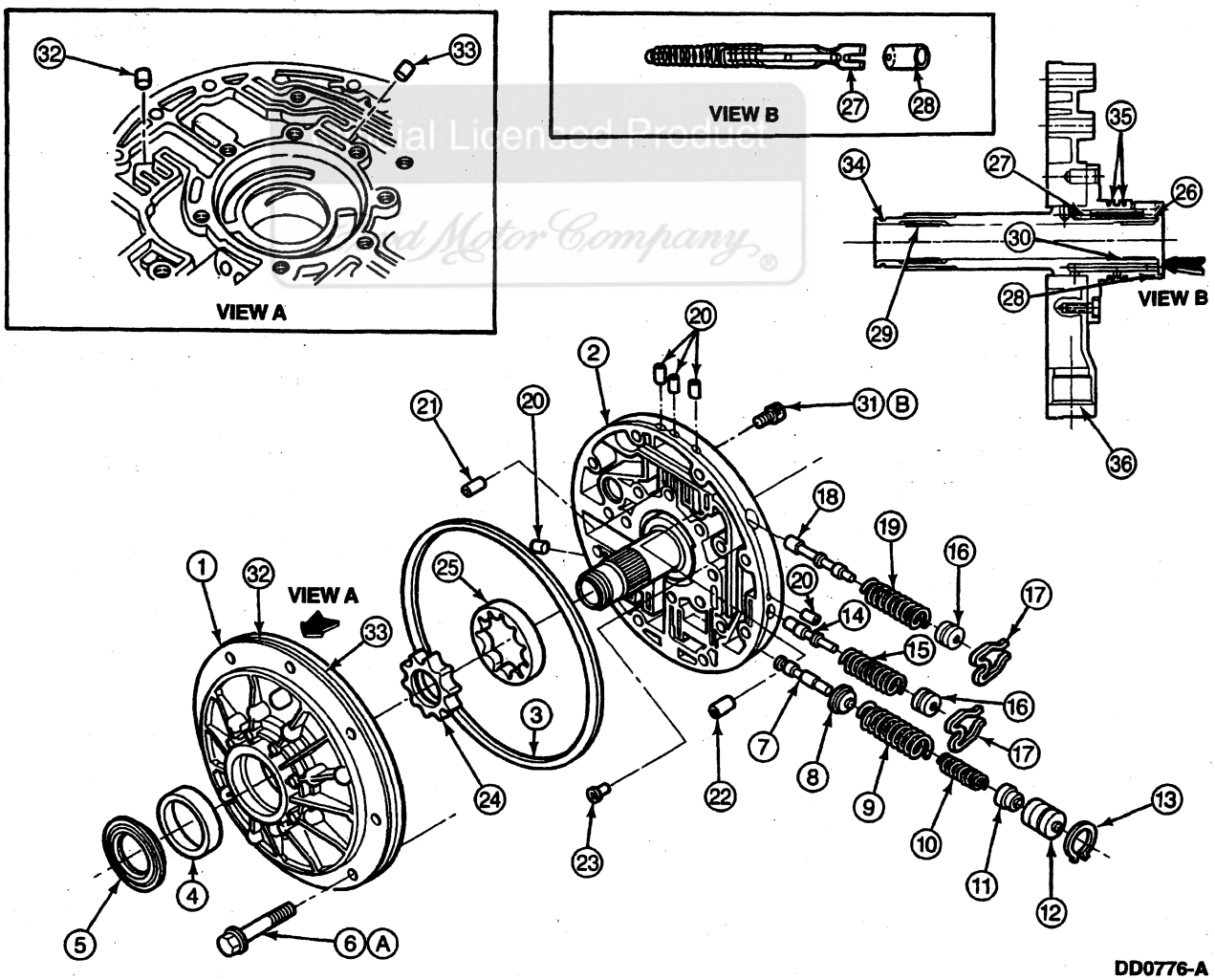

DISASSEMBLY (Continued)

Item	Part Number	Description
1	—	Pump Body (Part of 7A103)
2	—	Control Body (Part of 7A103)
3	7A248	Square-Cut Front Pump Seal
4	7B258	Converter Hub Bushing
5	7A248	Front Pump Seal
6	N805260-S	Bolt and Washer Assy (9 Req'd)
7	—	Main Regulator Valve (Part of 7A103)
8	—	Spring Retainer (Part of 7A103)
9	—	Outer Spring (Part of 7A103)
10	—	Inner Spring (Part of 7A103)
11	—	Main Regulator Booster Valve (Part of 7A103)
12	—	Main Regulator Booster Sleeve (Part of 7A103)
13	—	Retainer Clip (Part of 7A103)
14	—	Converter Regulator Valve (Part of 7A103)
15	—	Spring (Part of 7A103)
16	—	End Plug (Part of 7A103)
17	—	Retainer Clip (Part of 7A103)
18	—	Converter Clutch Control Valve (Part of 7A103)
19	—	Spring (Part of 7A103)
20	—	Solid Cup Plug (Part of 7A103)
21	—	Orificed Cup Plug (Part of 7A103)

(Continued)

Item	Part Number	Description
22	—	Orificed Cup Plug (Part of 7A103)
23	—	Air Bleed Check Valve Assy (Part of 7A103)
24	—	Inner Gerotor Gear (Part of 7A103)
25	—	Outer Gerotor Gear (Part of 7A103)
26	N805802	Orifice Cup Plug
27	—	Spring and Stop Assy (Part of 7H132)
28	—	Solid Cup Plug (Part of 7A103)
29	—	Front Input Shaft Bushing (Part of 7A103)
30	—	Rear Input Shaft Bushing (Part of 7A103)
31	—	Bolt, M8 (11 Req'd) (Part of 7A103)
32	—	Orificed Cup Plug (Part of 7A103)
33	—	Orificed Cup Plug (Part of 7A103)
34	7L323	Front Pump Stator Support Seal
35	7G402	Coast Clutch Seal
36	—	Inlet Tube Bore (Part of 7A103)
A	—	Tighten to 24-31 N·m (18-23 Lb-Ft)
B	—	Tighten to 24-31 N·m (18-23 Lb-Ft)

Licensed Product Compliance

DISASSEMBLY (Continued)

Disassembly

1. Inspect front pump seal. If damaged, remove with Impact Slide Hammer T59L-100-B and Seal Remover TOOL-1175-AC or equivalent.

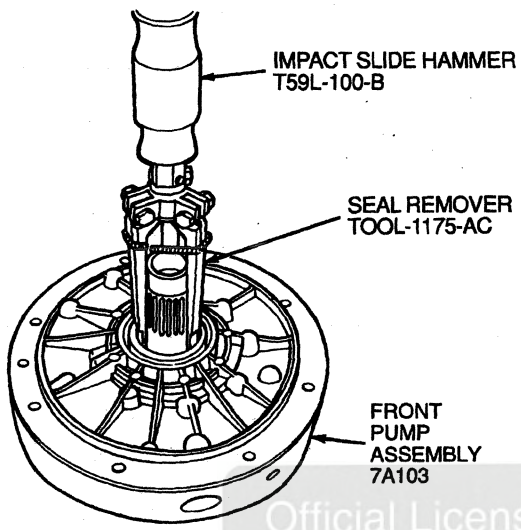

DD0777-A

2. Remove front pump stator support seal from front of stator support.

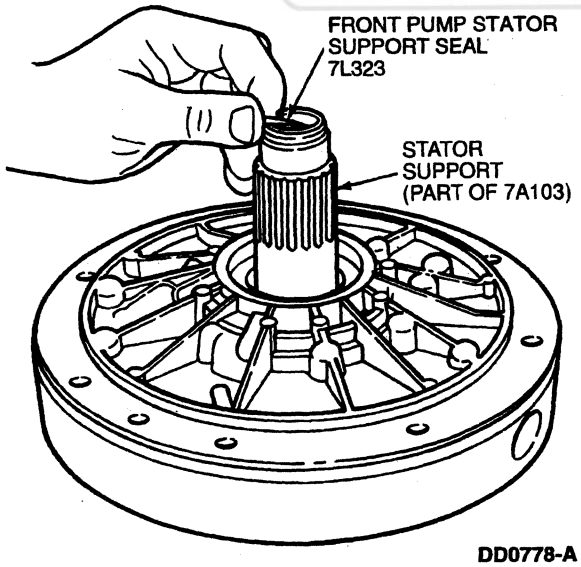

DD0778-A

3. Remove two Teflon® coast clutch seals from stator support. Remove pump outer diameter square-cut front pump seal.

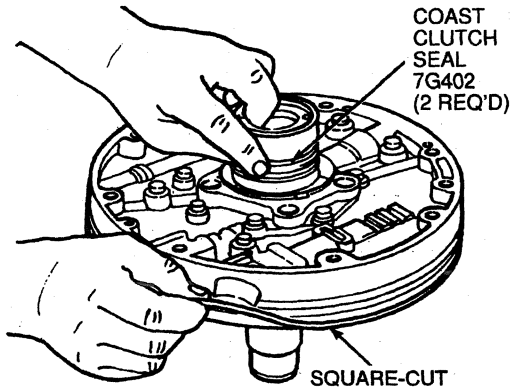

DD0779-A

Official Licensed Product
Ford Motor Company

DISASSEMBLY (Continued)

4 **CAUTION Do not reuse orifice cup plug or spring and stop assembly Make sure the old rubber stop is removed (it can become separated from the spring assembly)**

CAUTION. Use care not to damage any machined surfaces of stator support

Remove and discard orifice cup plug and spring and stop assembly

Clean and inspect bore, making sure bore is clean of any debris

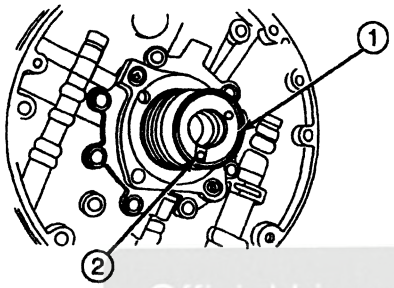

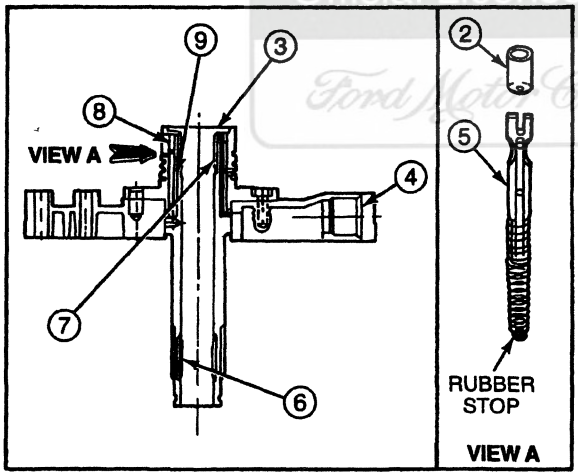

D14299-B

Item	Part Number	Description
1	—	Stator Support Mating Surface
2	N805802	Orifice Cup Plug (Serviced in 7H132)
3	7E486	No 2A Overdrive Sun Gear Thrust Bearing
4	—	Inlet Tube Bore

(Continued)

Item	Part Number	Description
5	7H132	Spring and Stop Assy (Serviced in 7H132)
6	—	Front Input Shaft Bushing (Part of 7A103)
7	—	Rear Input Shaft Bushing (Part of 7A103)
8	N805802	Orifice Cup Plug
9	7H132	Converter Drainback Spring and Stop Assy

5 Obtain Banding Tool D89L-7700-A or equivalent and one 10 mm bolt prior to removing pump body bolts This tool is needed to align the pump with the control body assembly during reassembly

6 NOTE For the next two steps, refer to pump assembly, disassembled view

Remove ten bolts Support pump body Remove the remaining bolt Separate pump control body from pump body

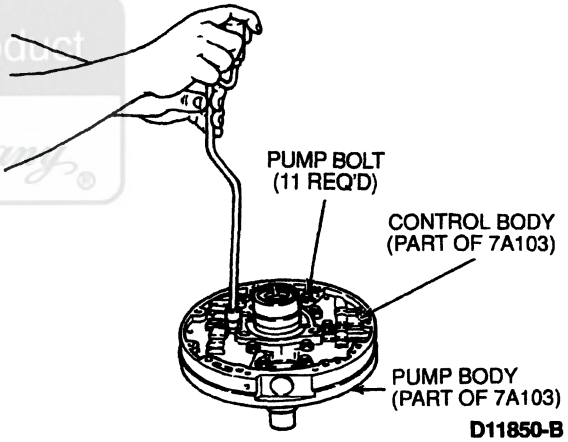

D11850-B

7 **CAUTION DO NOT remove any of the remaining cup plugs unless directed to do so in other steps. DO NOT remove stator support from control body as this can distort the surface of the control body**

Apply pressure to main regulator booster sleeve and remove retainer Remove main regulator valve assembly

8 Remove converter regulator valve assembly by applying pressure to end plug and removing retainer clip with small screwdriver or tweezers

9 Remove converter clutch shift valve assembly by applying pressure to end plug and removing retainer clip with small screwdriver or tweezers

Official Licensed Product Ford Motor Company

DISASSEMBLY (Continued)

10. Remove gerotor gearset from pump body.

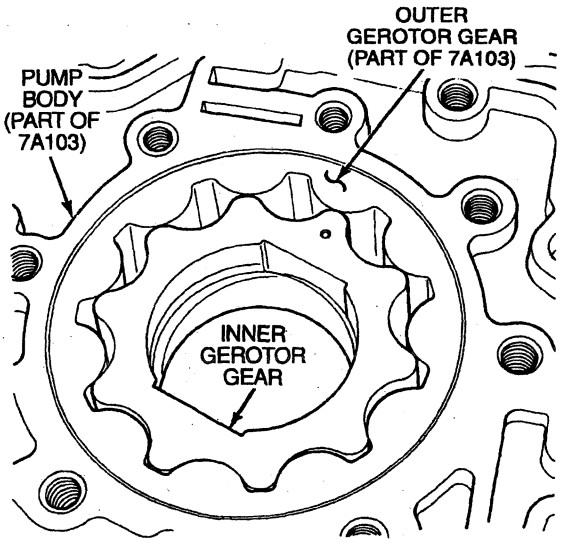

D9282-C

11. Clean all pump parts in solvent and dry with compressed air.
12. Inspect pump gears, faces, gear teeth, pump housing and mating surfaces for damage or scoring. Replace entire pump if any part is damaged or worn.
13. Inspect converter hub bushing. Replace entire pump if scored or excessively worn.

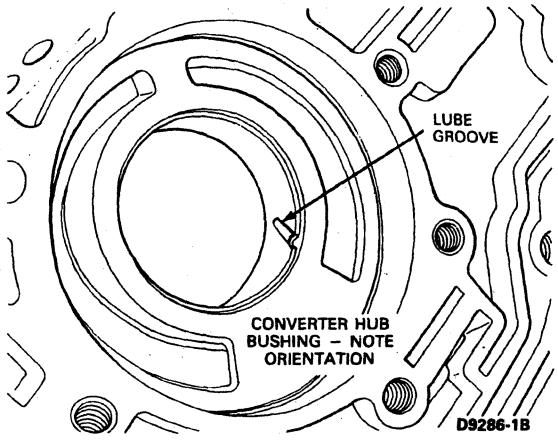

D9286-1B

14. Inspect input shaft bushings. If bushings are worn or scored, replace entire pump assembly.

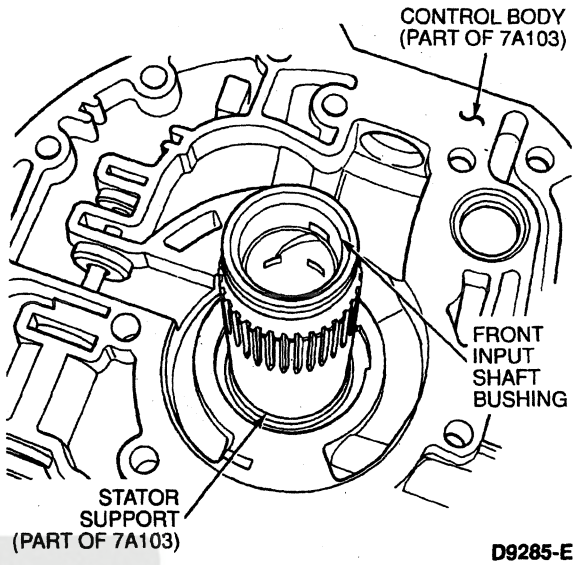

D9285-E

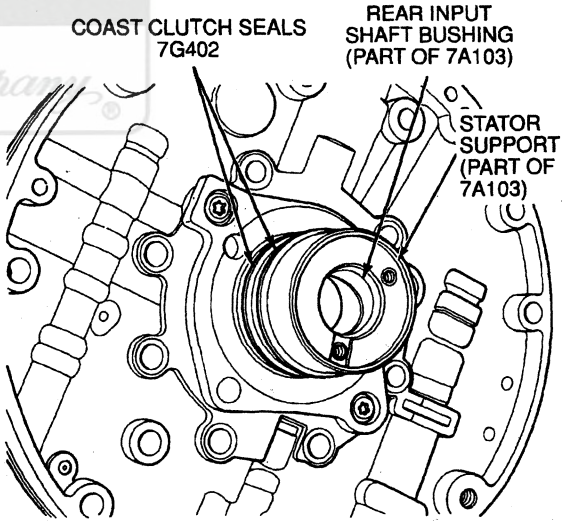

D9284-E

Official Licensed Product
Ford Motor Company

DISASSEMBLY (Continued)

15. Place pump gerotor gearset in pump gear pocket, centered to pump bushing diameter.

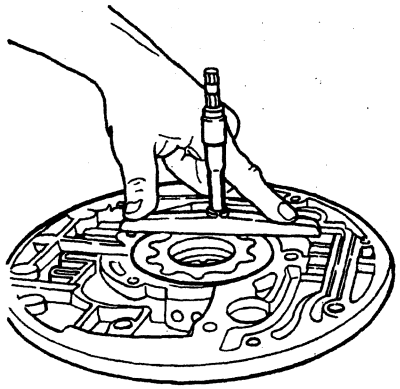

D11851-B

16. Using depth micrometer, measure and record the depth of inner gerotor gear face to the machined surface of the pump body. Center the inner diameter of the inner gear over the bushing for this step.
17. Repeat measurement for a total of three readings in equally spaced locations on gear face.
18. Remove the inner gear and install the outer gear.

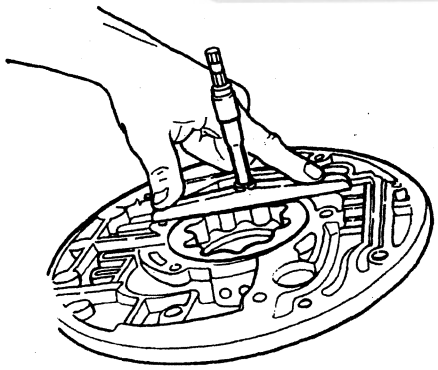

D11852-A

19. Using depth micrometer, measure and record the depth of the outer gerotor gear to the machined surface of the pump body.
20. All depth measurements must be within 0.0381-0.0559 mm (0.0015-0.0022 inch). If either reading is out of specification, replace the front pump assembly.
21. Inspect all valve and plug bores for scoring or damage. Check all passages for obstructions. Inspect mating surfaces for burrs and scoring.
22. Inspect all springs for distortion. When dry, make sure all valves and plugs move freely within their bores.

Assembly

1. Install main regulator valve assembly as shown in pump assembly, disassembled view. Apply pressure to main regulator booster sleeve and install retainer clip. Make sure retainer clip is properly seated.
2. Install converter clutch shift valve assembly.
3. Install torque converter regulator valve assembly.
4. Lightly coat the gerotor gears with transmission fluid and install in pump housing. The dot on the inner gerotor gear must face the control body assembly.

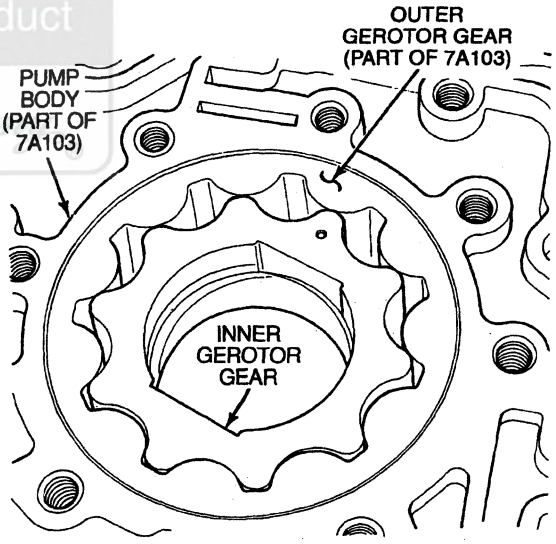

D9282-C

Official Licensed Product
Ford Motor Company

DISASSEMBLY (Continued)

5. **CAUTION: Prior to pump assembly, make sure all cup plugs are installed.**

   CAUTION: Inspect mating surfaces of pump body and control body to make sure they are clean and free of nicks and burrs.

   Lower the control body and stator assembly onto the pump body, aligning the 28-mm round hole in the control body with the 28-mm hole in the pump body.

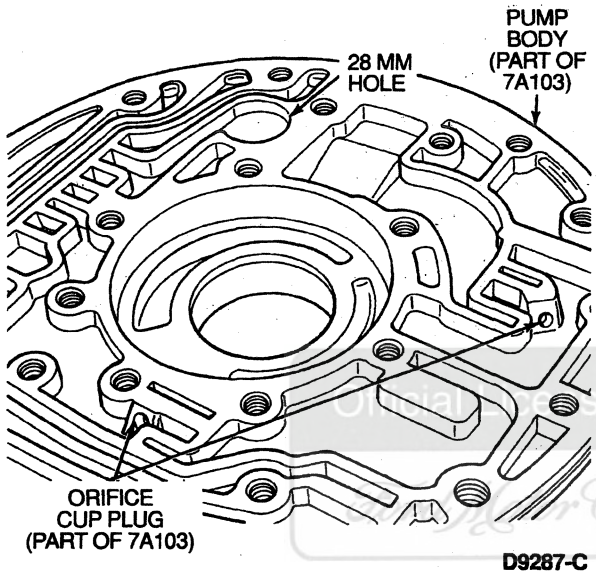

D9287-C

6. Loosely install eleven M8x50 bolts. Install one 10-mm alignment bolt in the position shown and install Banding Tool D89L-77000-A or equivalent with clamp by filter inlet. Align outer bolt holes and tighten banding tool.

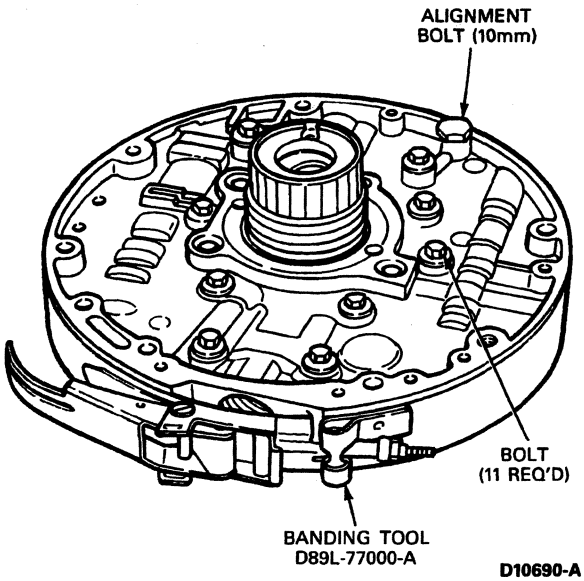

D10690-A

7. Tighten bolts to 24-31 N·m (18-23 lb-ft). Remove banding tool and 10-mm alignment bolt. Make sure the outer edges of the control body and the pump body are completely aligned.
8. NOTE: Make sure seal grooves are clean and free of burrs.

   NOTE: Make sure coast clutch seals are fully seated in grooves and oriented 180 degrees apart.

   Install coast clutch Teflon® seals. Install outer diameter seal.

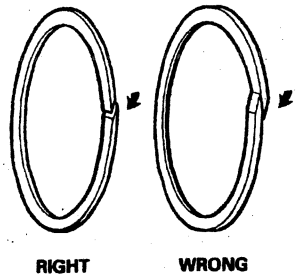

D9289-1A

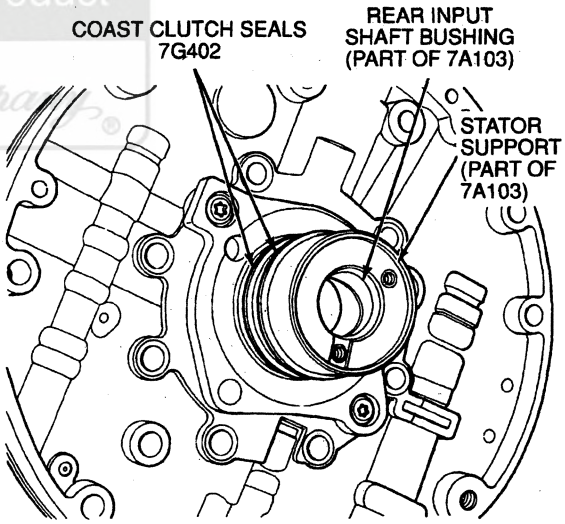

D9284-E

9. Install front pump stator support seal on front of stator support in same manner as coast clutch seals.

Official Licensed Product

DISASSEMBLY (Continued)

10. NOTE: Insert the end with the rubber stop into the bore first.

    Install a new spring and stop assembly from service kit E9TZ-7H132-B.

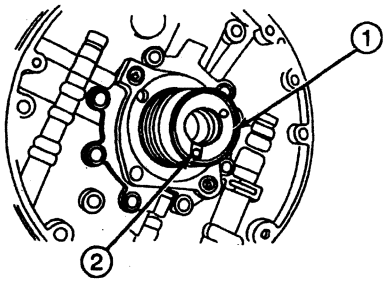

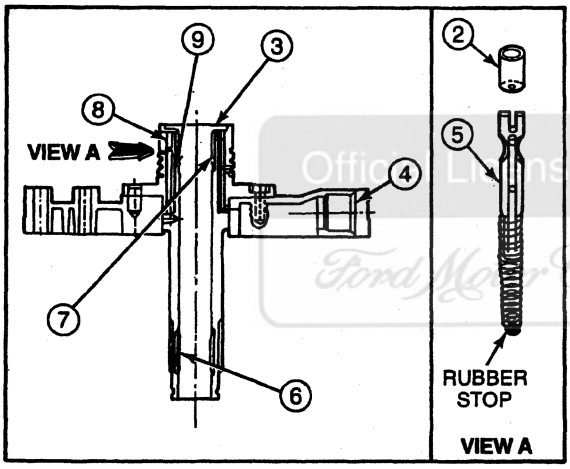

D14299-B

Item	Part Number	Description
1	—	Stator Support Mating Surface
2	N805802	Orifice Cup Plug (Serviced in 7H132)
3	7E486	No. 2A Overdrive Sun Gear Thrust Bearing
4	—	Inlet Tube Bore
5	7H132	Spring and Stop Assy (Serviced in 7H132)
6	—	Front Input Shaft Bushing (Part of 7A103)
7	—	Rear Input Shaft Bushing (Part of 7A103)
8	N805802	Orifice Cup Plug
9	7H132	Converter Drainback Spring and Stop Assy

11. NOTE: Make sure the edge of the cup plug is seated just below the stator support surface that mates with the No. 2 needle bearing assembly.

    Using a small drift and mallet, install a new cup plug from the service kit E9TZ-7H132-B.

12. Using Front Pump Seal Replacer T63L-77837-A, install front pump seal if removed.

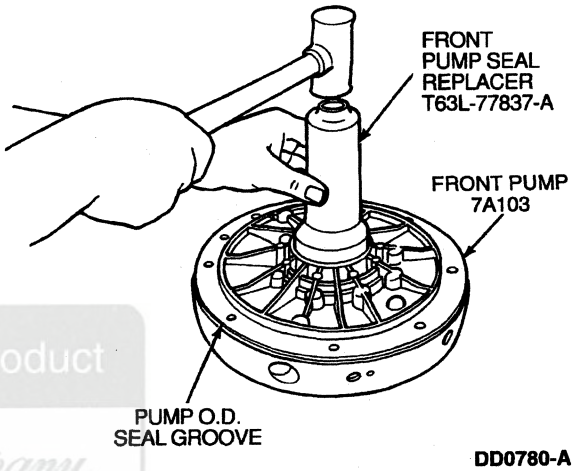

DD0780-A

13. Install No. 1 pump thrust washer and No. 2A overdrive sun gear thrust bearing into pump stator support. Use a light film of petroleum jelly to hold washer and bearing assembly in place.

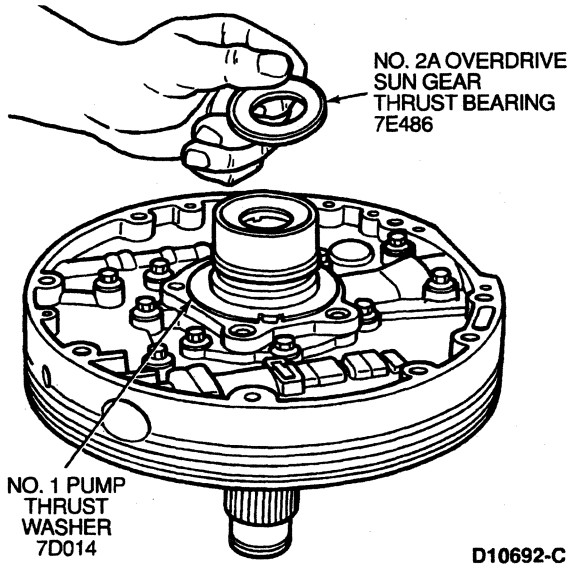

D10692-C

Official Licensed Product
Ford Motor Company

DISASSEMBLY (Continued)

Coast Clutch Assembly

SPECIAL SERVICE TOOL(S) REQUIRED

Description	Tool Number
Clutch Spring Compressor	T65L-77515-A

Refer to the following disassembled view of the coast clutch assembly for component location and orientation.

Coast Clutch Assembly, Disassembled View

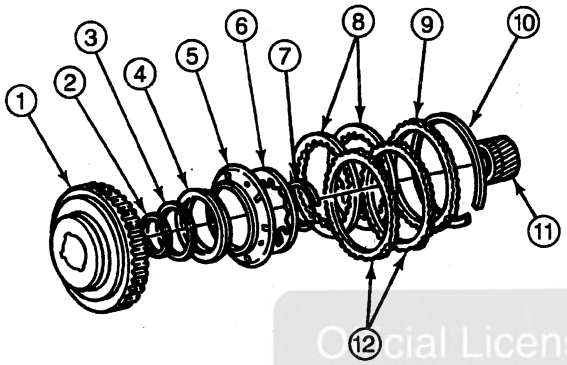

DD0782-A

Item	Part Number	Description
1	7G387	Coast Clutch Cylinder
2	7A548	Coast Clutch Piston Inner Seal
3	7A548	Coast Clutch Piston Outer Seal
4	7A262	Coast Clutch Piston
5	7N519	Apply Ring
6	7B070	Coast Clutch Piston Spring
7	7A527	Retaining Ring
8	7B164	Coast Clutch Friction Plates
9	7B066	Coast Clutch Pressure Plate
10	7D483	Coast Clutch Pressure Plate Retainer Snap Ring
11	7D063	Overdrive Sun Gear
12	7B442	Coast Clutch Steel Plates

Disassembly

1. Remove overdrive sun gear (7D063) from coast clutch cylinder.

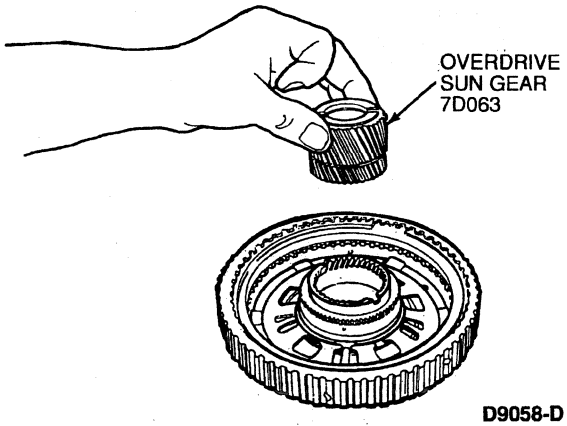

D9058-D

2. Remove selective coast clutch pressure plate retainer snap ring.

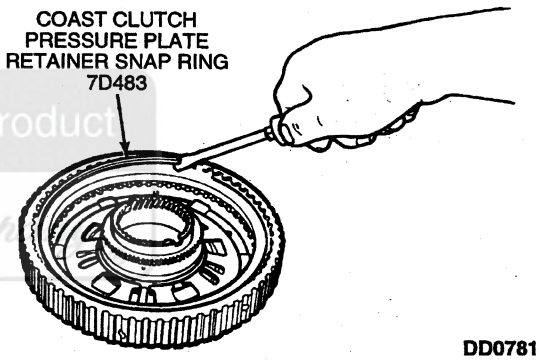

DD0781-A

3. Remove coast clutch pressure plate and clutch plates from coast clutch cylinder. Tag clutch pack for reassembly.

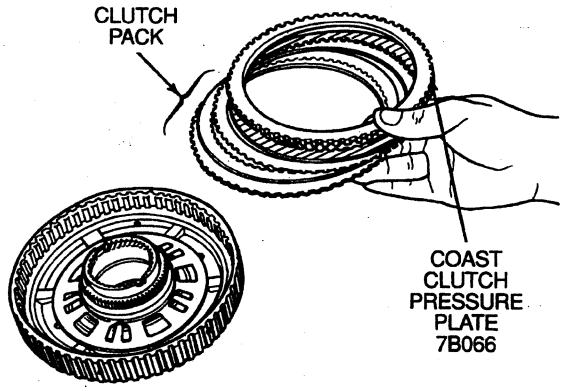

D9060-D

Official Licensed Product
Ford Motor Company

DISASSEMBLY (Continued)

4. **CAUTION: Do not fully compress the return springs.**
   Using Clutch Spring Compressor T65L-77515-A, compress coast clutch piston return spring and remove coast clutch piston return spring retaining ring. Remove compressor tool. **Discard coast clutch return spring retaining ring.**

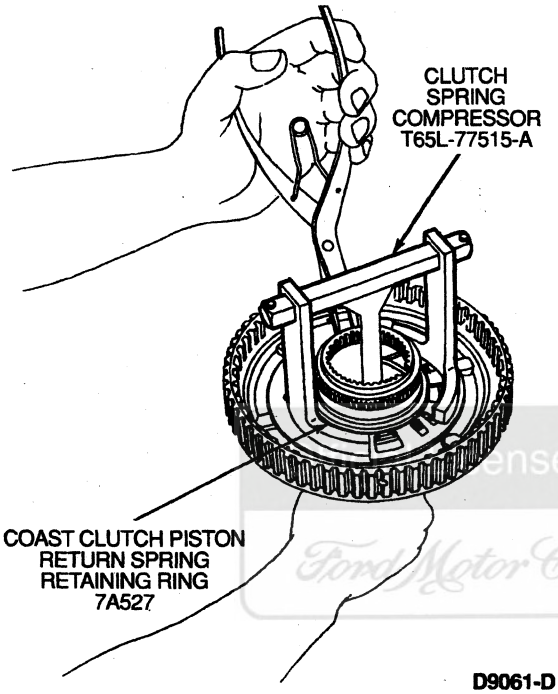

D9061-D

5. Remove coast clutch piston return spring.

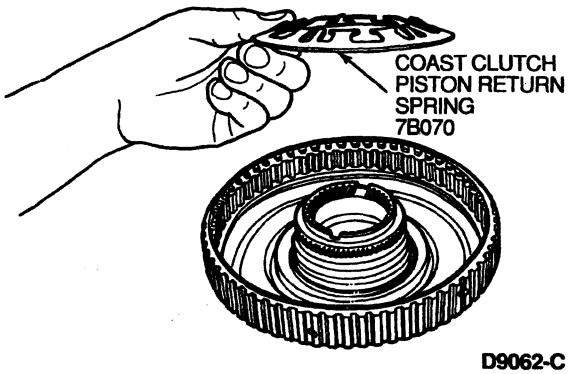

D9062-C

6. Remove coast clutch piston apply ring.

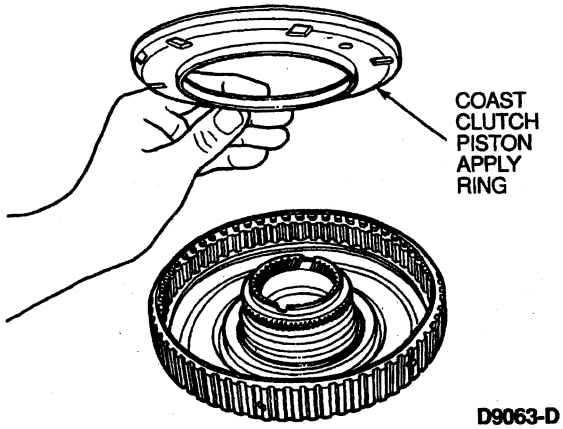

D9063-D

7. Remove coast clutch piston from coast clutch cylinder.

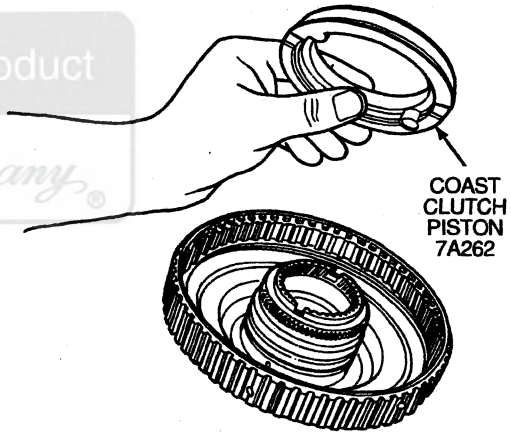

D9064-C

8. Remove coast clutch piston outer seal from coast clutch piston.

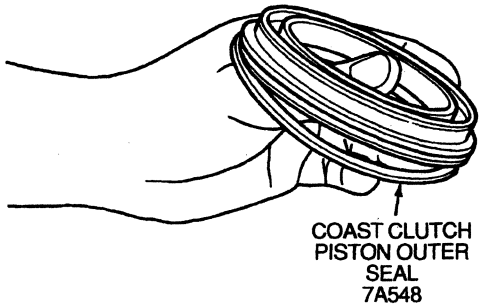

D9065-C

Licensed Product Ford Motor Company

DISASSEMBLY (Continued)

9. Remove coast clutch piston inner seal from coast clutch cylinder.

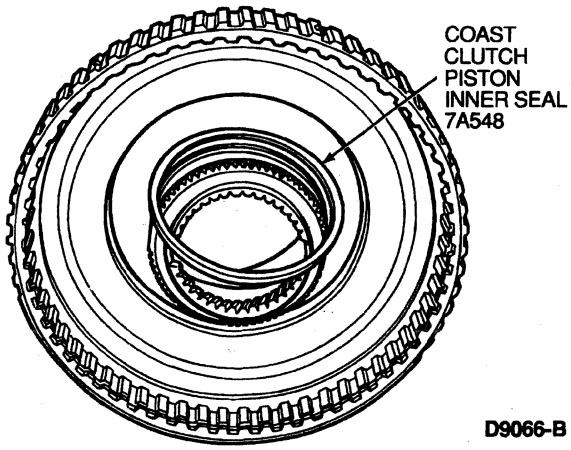

D9066-B

Assembly

NOTE: Soak all friction plates for 15 minutes in clean Motorcraft MERCON® Multi-Purpose Automatic Transmission Fluid XT-2-QDX or MERCON® equivalent.

Lightly lube all O-ring seals before installing, using Motorcraft MERCON® Multi-Purpose Automatic Transmission Fluid XT-2-QDX or MERCON® equivalent.

1. Install coast clutch piston inner seal so that lip is facing toward bottom (downward) into coast clutch cylinder.

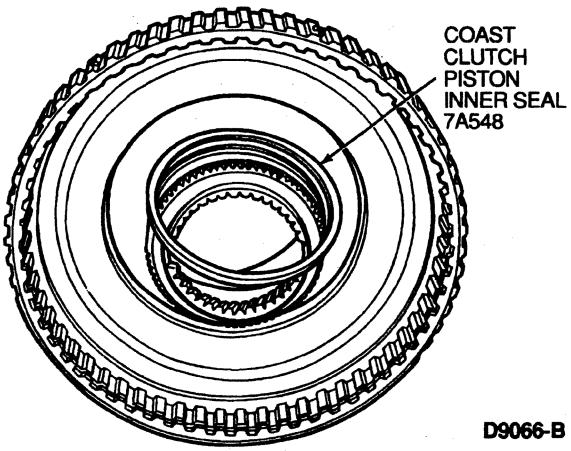

D9066-B

2. Install coast clutch piston outer seal so that lip is facing toward bottom (downward) onto coast clutch piston.

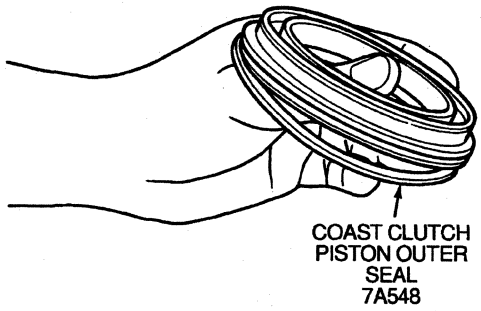

D9065-C

3. Install coast clutch piston into coast clutch cylinder.

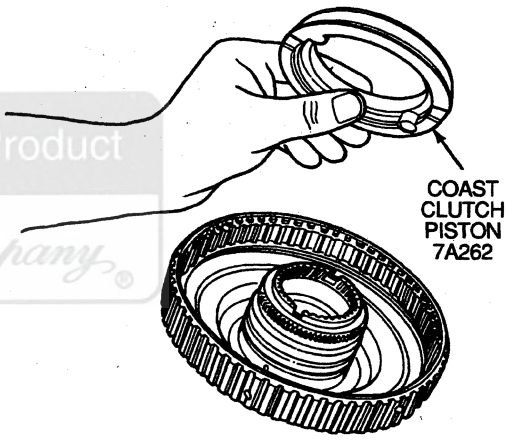

D9064-C

4. Install coast clutch piston apply ring.

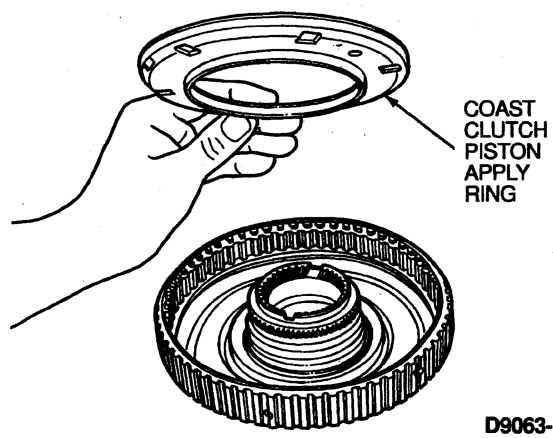

D9063-D

Official Licensed Product Ford Motor Company

DISASSEMBLY (Continued)

5. Install coast clutch piston return spring.

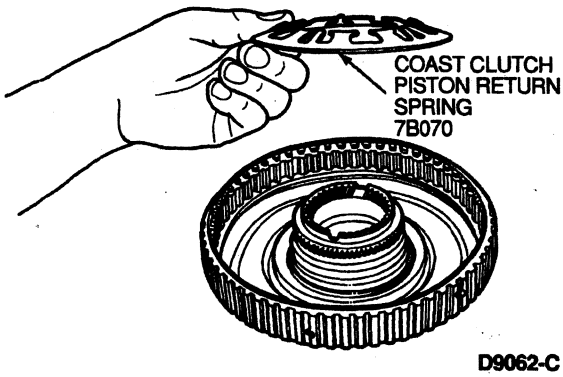

D9062-C

6. **CAUTION: Do not fully compress the return springs.**

   Using Clutch Spring Compressor T65L-77515-A, compress coast clutch piston return spring and install coast clutch piston return spring retaining ring.

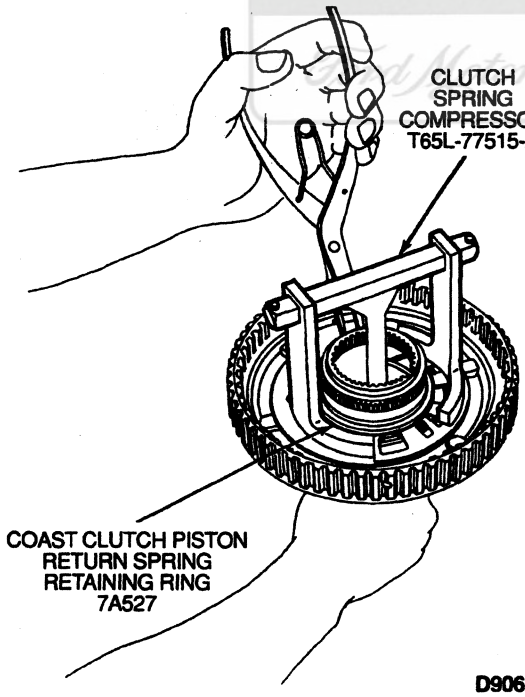

D9061-D

7. Install clutch plates alternately, starting with steel plate and ending with coast clutch pressure plate.

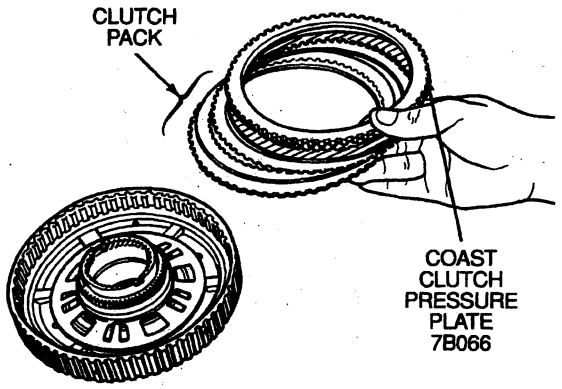

D9060-D

8. Install coast clutch pressure plate retainer snap ring. Check stack-up clearance in three places, 120° apart, using feeler gauge. If clearance is not 1.27-0.76 mm (0.030-0.050 inch), install correct coast clutch pressure plate retainer snap ring and recheck clearance. Refer to the Specifications portion of this section for selective snap ring thicknesses and part numbers.

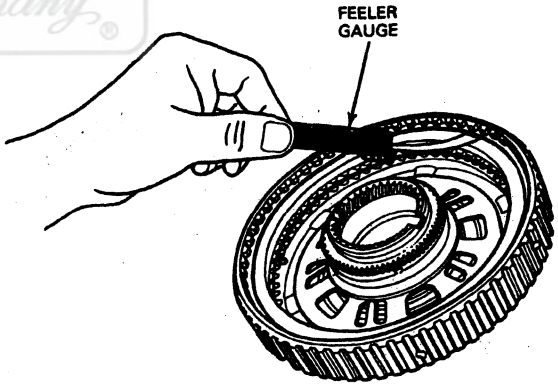

D9067-1A

Official Licensed Product
Ford Motor Company

DISASSEMBLY (Continued)

9. Install overdrive sun gear with short end of gear downward into coast clutch cylinder.

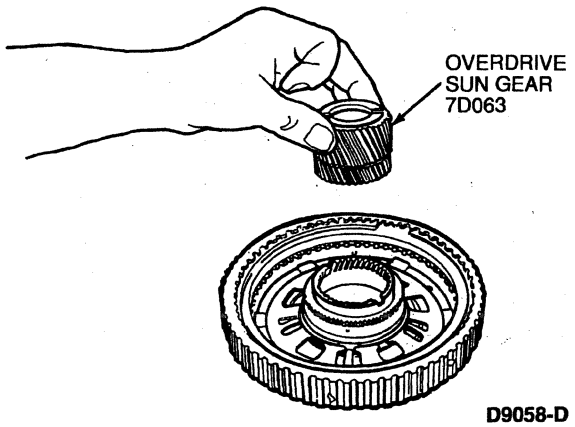

D9058-D

Overdrive Ring Gear and Center Shaft Assembly

Refer to the following disassembled view of the overdrive ring gear and center shaft for component location and orientation.

Overdrive Ring Gear and Center Shaft Assembly, Disassembled View

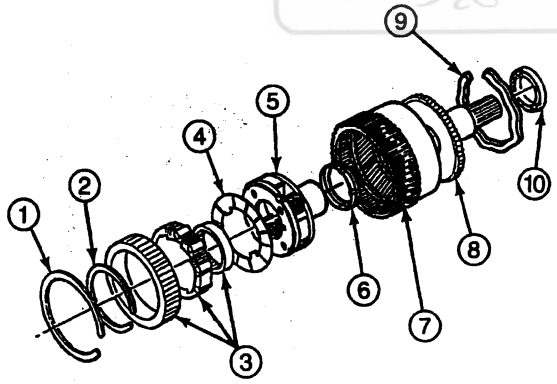

DD0784-A

Item	Part Number	Description
1	7G375	Retaining Ring — Flat
2	377135-S	Retaining Ring — Small

(Continued)

Item	Part Number	Description
3	7A089	Overdrive One-Way Clutch Assy
4	7L339	No. 3 Overdrive Overrunning Clutch Thrust Washer
5	7B446	Overdrive Planet Assy
6	7F240	No. 4 Overdrive Planet Thrust Bearing Assy
7	7A153	Overdrive Ring Gear
8	7A658	Overdrive Center Shaft
9	7G375	Wavy Retaining Ring
10	7G178	No. 5 Overdrive Center Shaft Thrust Bearing Assy

Disassembly

1. Remove flat retaining ring.

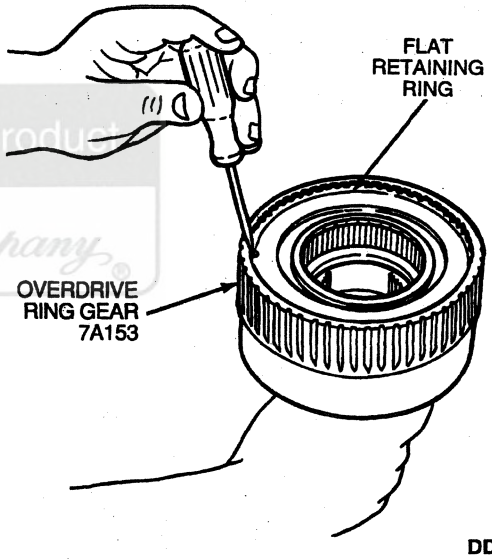

DD0783-A

Official Licensed Product
Ford Motor Company

DISASSEMBLY (Continued)

2. Remove overdrive one-way clutch with inner and outer races.

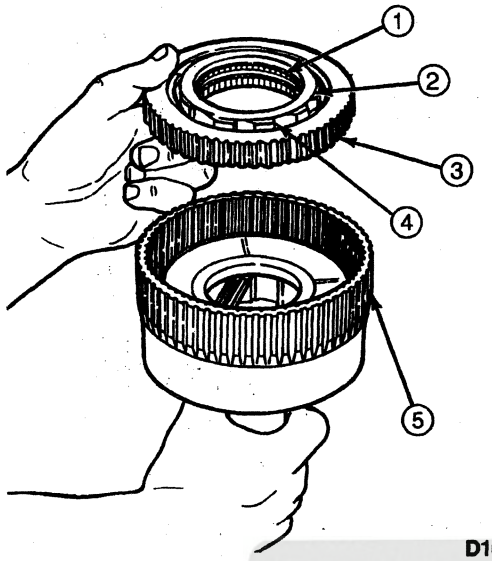

D10694-C

Item	Part Number	Description
1	—	Inner Race (Part of 7A089)
2	377135-S	Small Retaining Ring
3	—	Outer Race (Part of 7A089)
4	—	One-Way Clutch (Part of 7A089)
5	7A153	Overdrive Ring Gear

3. Remove No. 3 overdrive overrunning clutch thrust washer from front of overdrive planet assembly.

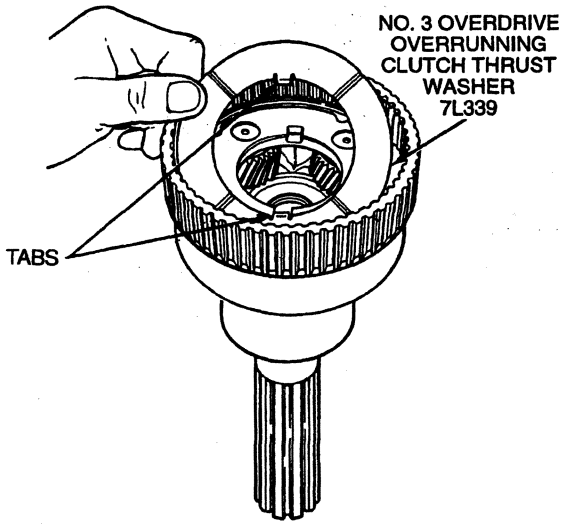

DD0785-A

4. NOTE: The No. 4 overdrive planet thrust bearing may stay in the ring gear.
Remove overdrive planet assembly.

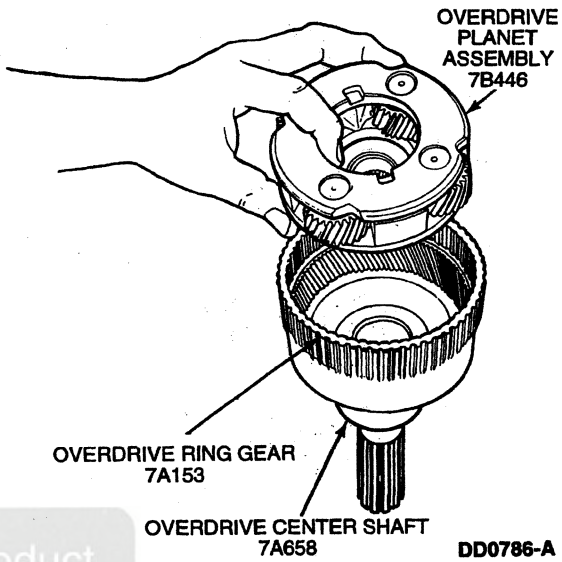

DD0786-A

5. Remove wavy retaining ring.

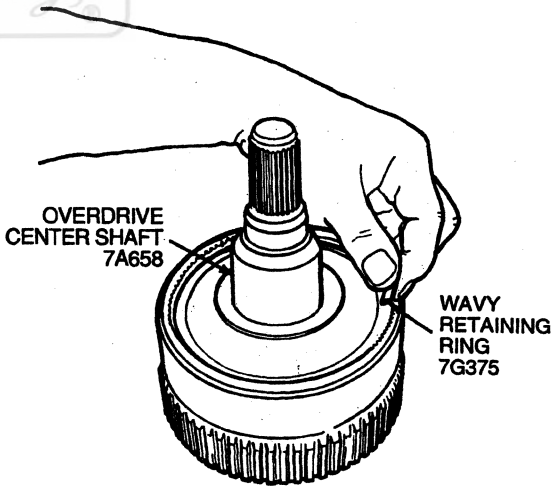

DD0788-A

Official Licensed Product

DISASSEMBLY (Continued)

6. Remove overdrive center shaft (7A658) from overdrive ring gear.

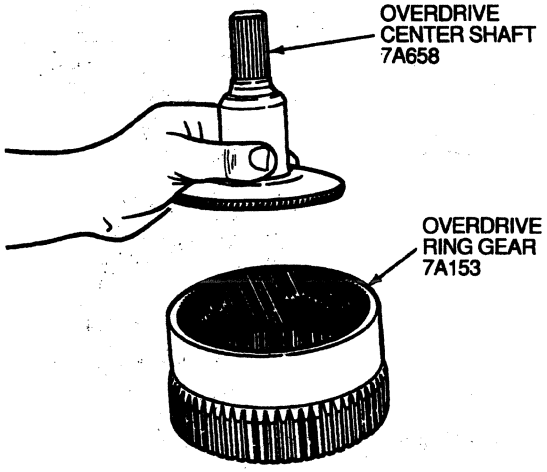

D10697-C

7. **CAUTION: Use care not to damage No. 4 overdrive planet thrust bearing assembly.**

   Remove No. 4 overdrive planet thrust bearing assembly from rear face of overdrive planet assembly.

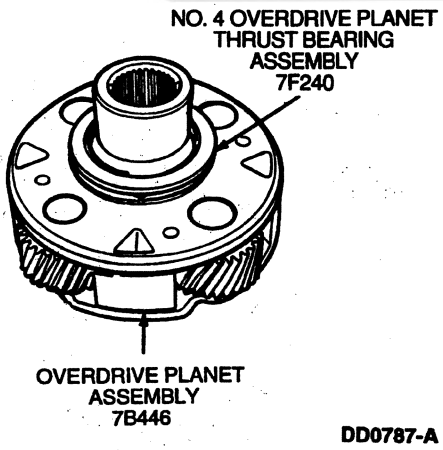

DD0787-A

8. Push out one-way clutch and inner race.

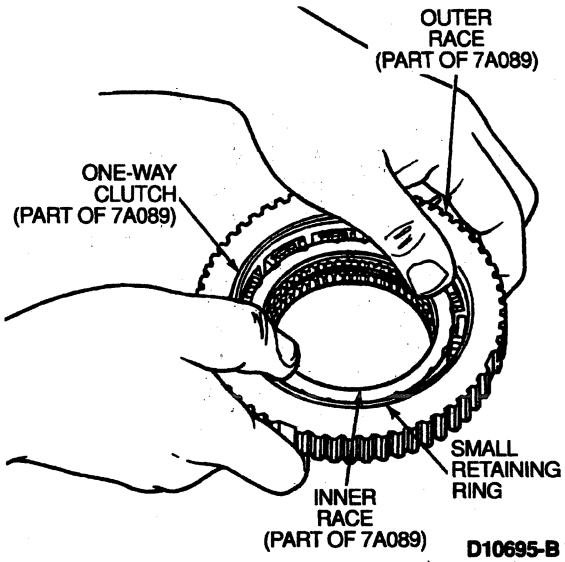

D10695-B

9. Remove inner race from one-way clutch.

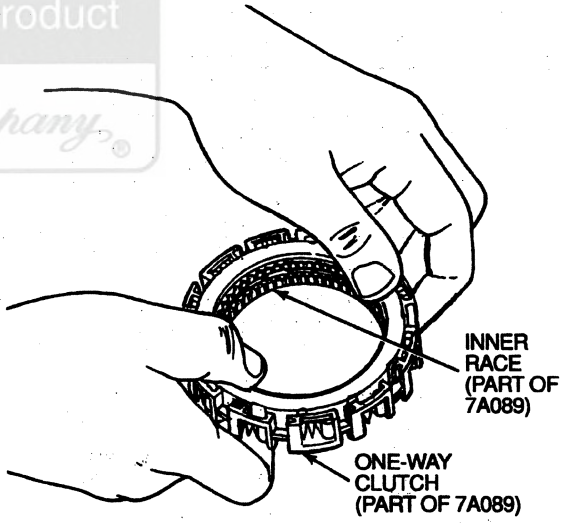

D10696-B

Assembly

1. Install overdrive center shaft into overdrive ring gear.

Official Licensed Product Ford Motor Company

DISASSEMBLY (Continued)

2. Secure overdrive center shaft to overdrive ring gear with wavy retaining ring.

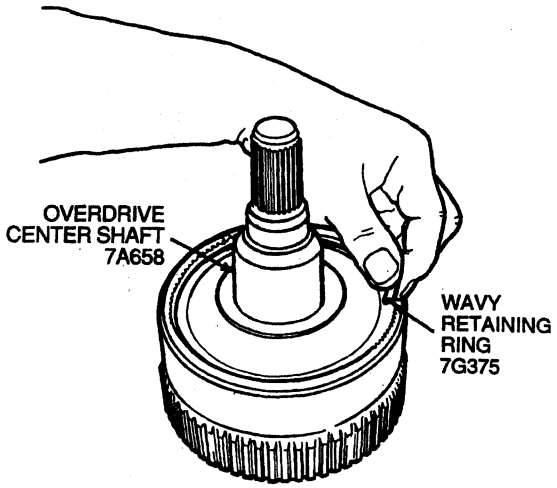

DD0788-A

3. Install No. 4 overdrive planet thrust bearing assembly with outer lip downward on rear face of overdrive planet assembly.

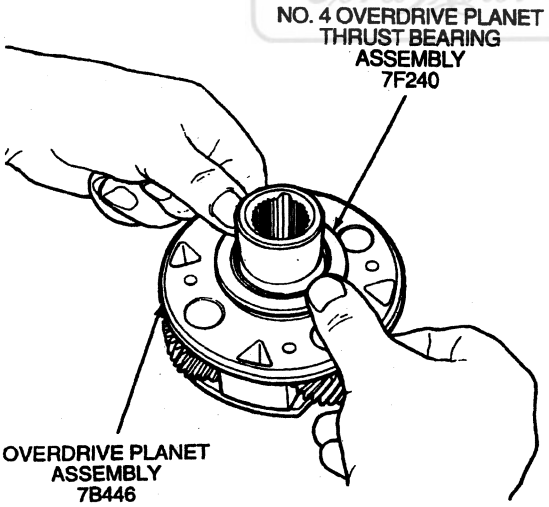

DD0789-A

4. **CAUTION: The input shaft (7017) and overdrive planet assembly are serviced as mating components.**

   NOTE: Different vehicle applications will have different planet assemblies. Refer to master parts catalog for correct usage.

   Install overdrive planet assembly into overdrive center shaft and overdrive ring gear assembly.

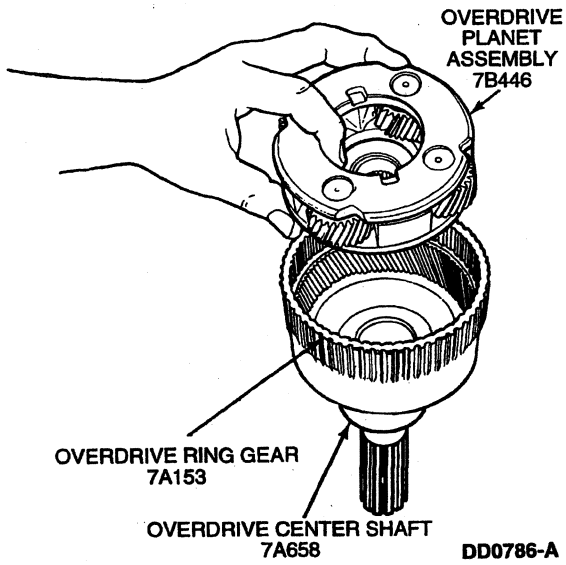

DD0786-A

5. Install No. 3 overdrive overrunning clutch thrust washer on front of overdrive planet assembly.

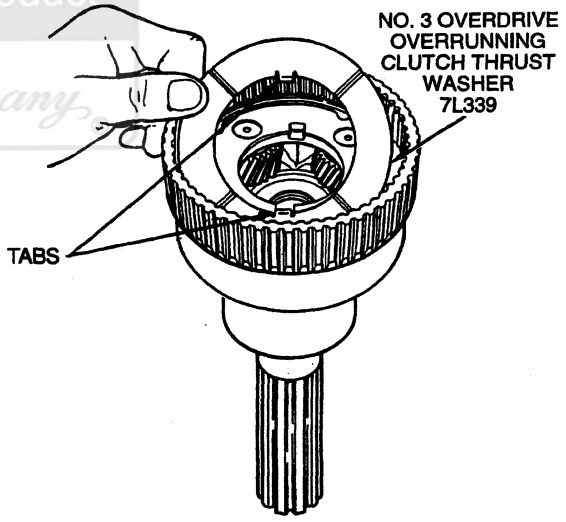

DD0785-A

6. Install retaining ring and unitized plastic cage into outer race.

Official Licensed Product
Ford Motor Company

DISASSEMBLY (Continued)

7. NOTE: When installed, inner race **must** rotate counterclockwise.

   Install inner race into one-way clutch assembly with undercut facing small retaining ring.

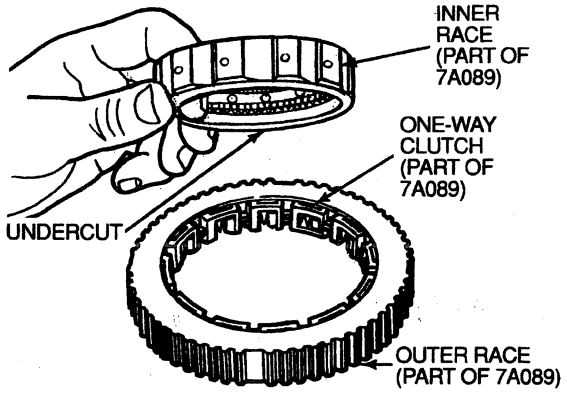

D10699-C

8. Install overdrive one-way clutch into overdrive ring gear with small retaining ring facing upwards.

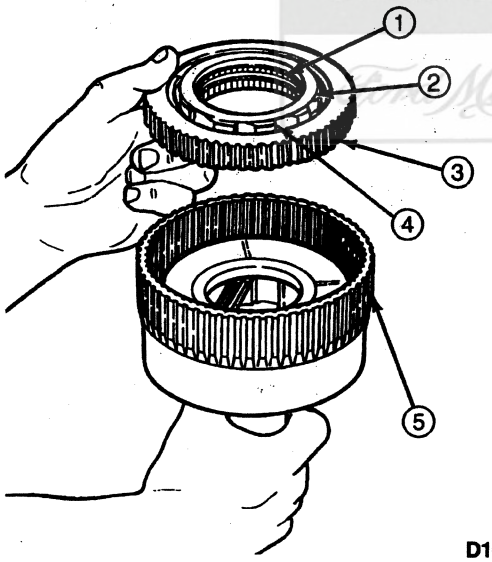

D10694-C

Item	Part Number	Description
1	—	Inner Race (Part of 7A089)
2	377135-S	Small Retaining Ring
3	—	Outer Race (Part of 7A089)
4	—	One-Way Clutch (Part of 7A089)
5	7A153	Overdrive Ring Gear

9. Install flat retaining ring.

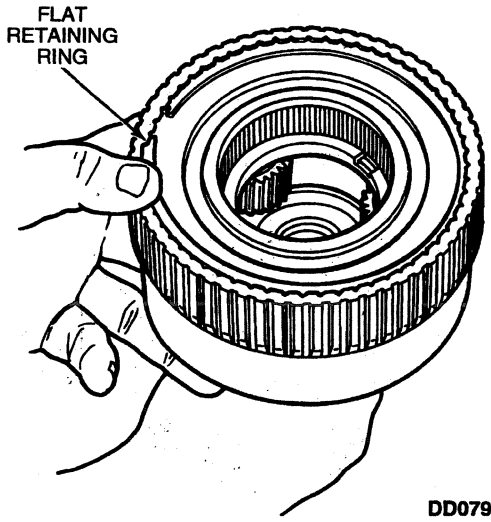

DD0790-A

10. NOTE: Inner bearing race lip must face upward.

    NOTE: Lightly lubricate thrust bearing with petroleum jelly to hold it in place during assembly.

    Install No. 5 overdrive center shaft thrust bearing assembly onto overdrive center shaft.

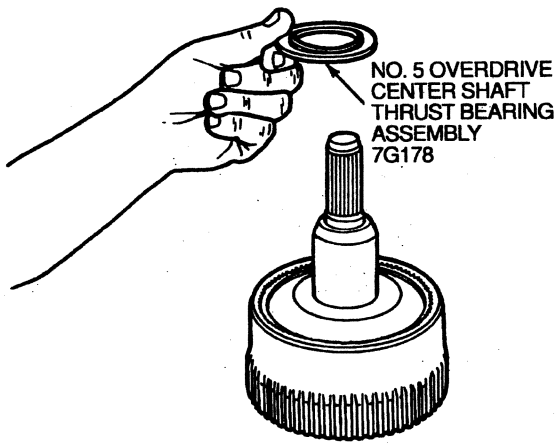

D10701-C

11. Remove selective coast clutch pressure plate retainer snap ring, coast clutch pressure plate and clutch plates from coast clutch cylinder.

Official Licensed Product
Ford Motor Company

DISASSEMBLY (Continued)

12. For ease of assembly, install overdrive center shaft assembly into coast clutch cylinder

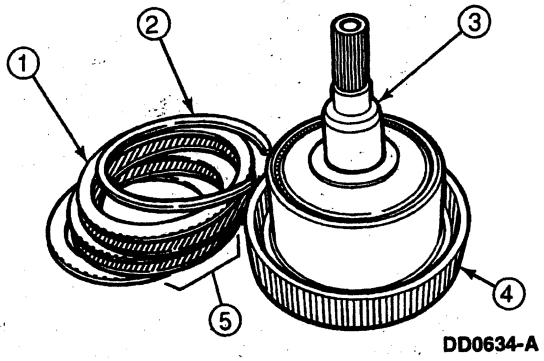

DD0634-A

Item	Part Number	Description
1	7B066	Coast Clutch Pressure Plate
2	7D483	Coast Clutch Pressure Plate Retainer Snap Ring
3	—	Overdrive Center Shaft Assy
4	7G387	Coast Clutch Cylinder
5	—	Clutch Pack

13. Reinstall clutch plates, coast clutch pressure plate and selective coast clutch pressure plate retainer snap ring into coast clutch cylinder.

Intermediate/Overdrive Cylinder Assembly

SPECIAL SERVICE TOOL(S) REQUIRED

Description	Tool Number
Clutch Spring Compressor Plate (Part of T89T-70010-C)	T89T-70010-C2
Clutch Spring Compressor Bar (Part of T88C-77000-AH)	T88C-77000-AH2
Clutch Spring Compressor Plate	T89T-70010-F
O-Ring Tool	T71P-19703-C

Refer to the following disassembled view of the intermediate/overdrive cylinder assembly for component location and orientation.

Intermediate/Overdrive Cylinder Assembly, Disassembled View

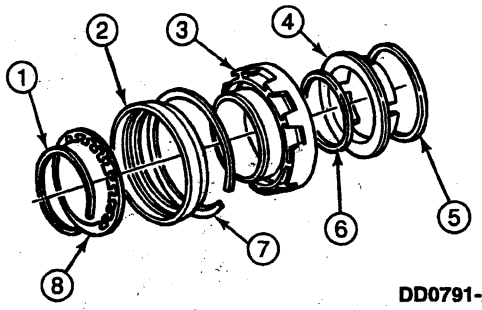

DD0791-A

Item	Part Number	Description
1	7A527	Overdrive Clutch Piston Return Spring Retainer
2	7A262	Overdrive Clutch Piston and (Bonded) Seal Assy
3	7G384	Intermediate/Overdrive Cylinder
4	7E005	Intermediate Clutch Piston
5	7F224	Intermediate Clutch Piston Outer Seal
6	7F225	Intermediate Clutch Piston Inner Seal
7	7D483	Intermediate Cylinder Retaining Ring
8	7B070	Overdrive Clutch Piston Return Spring

Ford Motor Company Licensed Product

DISASSEMBLY (Continued)

Disassembly

1. Using Clutch Spring Compressor Plate T89T-70010-C2 (Part of T89T-70010-C), Clutch Spring Compressor Bar T88C-77000-AH2 (Part of T88C-77000-AH) and Clutch Spring Compressor Plate T89T-70010-F, compress the overdrive clutch piston return spring.

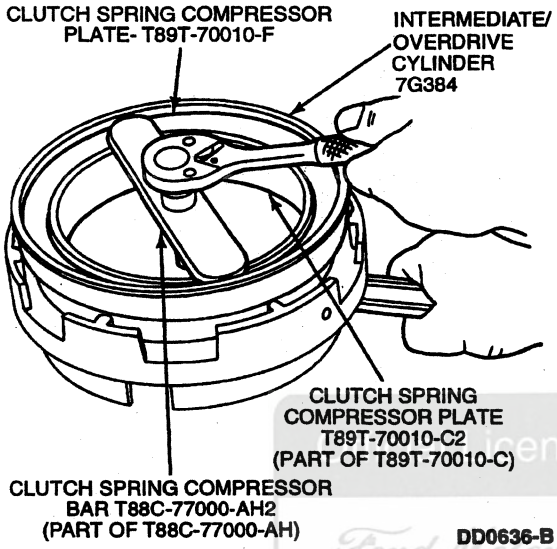

DD0636-B

2. Remove overdrive clutch piston return spring retainer.

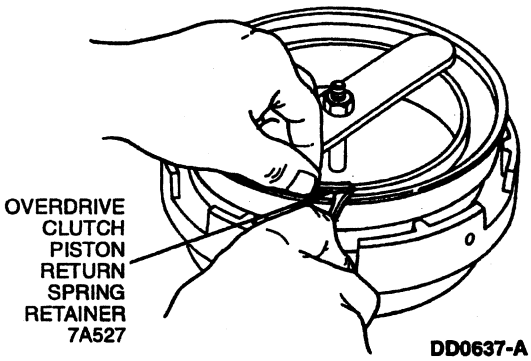

DD0637-A

3. Remove compressor tool assembly.
4. Remove overdrive clutch piston return spring.

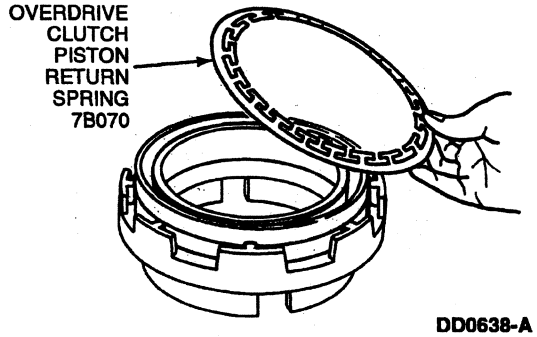

DD0638-A

5. NOTE: Overdrive piston seals are bonded to the piston. If the seals are damaged, replace the piston assembly.

   Remove overdrive clutch piston and (bonded) seal assembly.

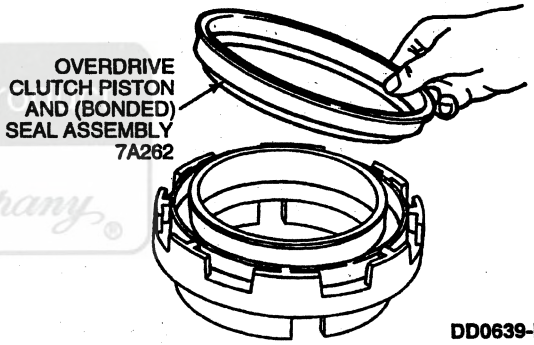

DD0639-B

6. Remove intermediate clutch piston (7E005).

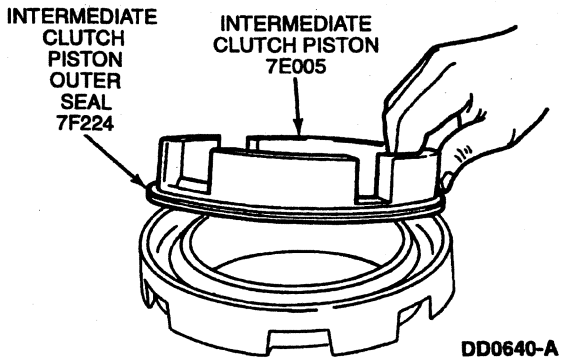

DD0640-A

Licensed Property Ford Motor Company

DISASSEMBLY (Continued)

7. Remove intermediate clutch piston inner seal (7F225) from cylinder bore, using O-Ring Tool T71P-19703-C.

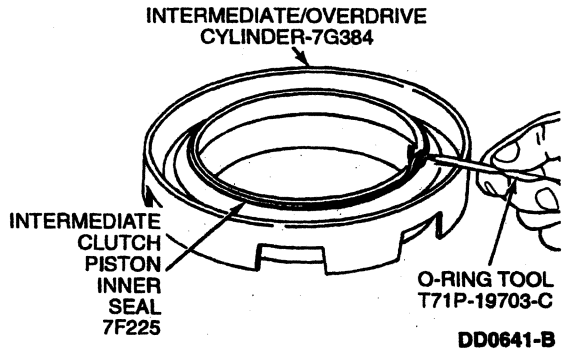

DD0641-B

8. Remove intermediate clutch piston outer seal (7F224) from intermediate clutch piston.

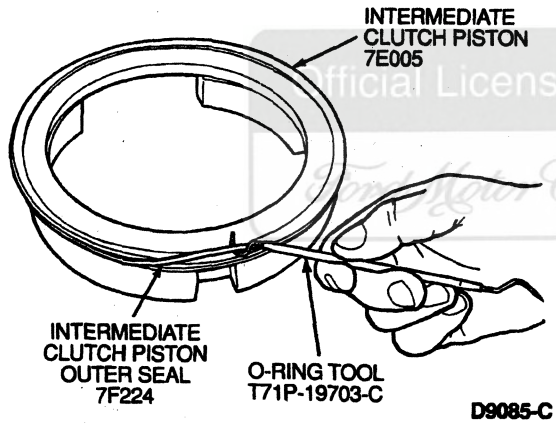

D9085-C

Assembly

1. NOTE: Prior to reassembly, inspect check ball, cup plugs and feedbolt threads for contamination or damage. Clean or replace as necessary.

   Install intermediate clutch piston outer seal onto intermediate clutch piston with lip seal facing upward.

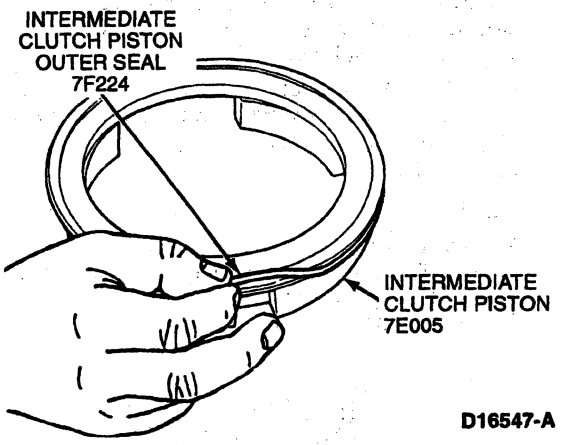

D16547-A

2. Install intermediate clutch piston inner seal into cylinder bore with lip seal facing downward toward cylinder.

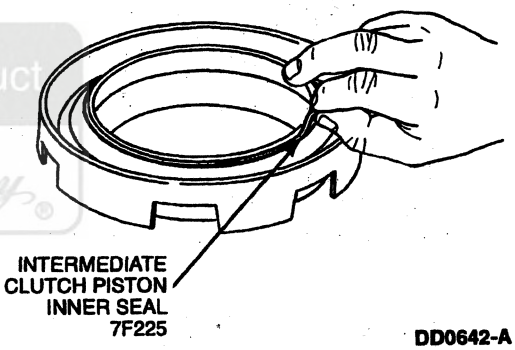

DD0642-A

3. NOTE: Piston should rotate freely in cylinder.

   Install intermediate clutch piston.

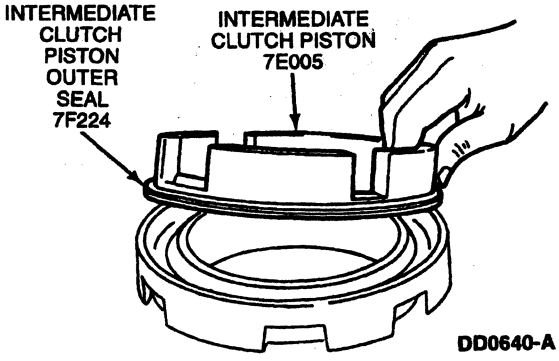

DD0640-A

Official Licensed Product Ford Motor Company

DISASSEMBLY (Continued)

4. **CAUTION: Overdrive piston lip seals are bonded to the piston. Use care not to damage or roll lip seal over.**

   CAUTION: If seals are damaged, the entire piston and seal assembly must be replaced.

   NOTE: Coat inner and outer bonded lip seals with petroleum jelly.

   NOTE: Piston should rotate freely in cylinder.

   Position overdrive clutch piston onto intermediate / overdrive cylinder at a slight angle. Then, rotate piston while pressing it down until fully sealed onto cylinder.

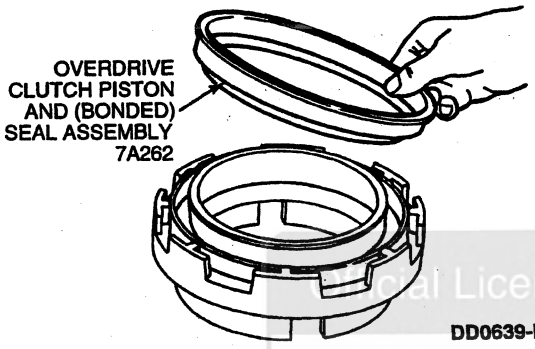

DD0639-B

5. NOTE: Overdrive clutch piston return spring must be installed with fingers facing upward.

   Install overdrive clutch piston return spring.

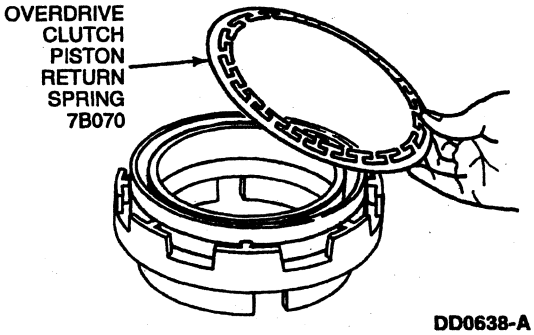

DD0638-A

6. Using Clutch Spring Compressor Plate T89T-70010-F, Clutch Spring Compressor Bar T88C-77000-AH2 and Clutch Spring Pressure Plate T89T-70010-C2, compress return spring.

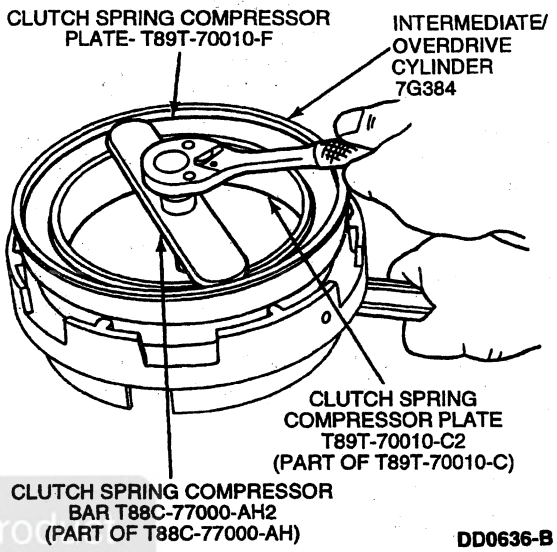

DD0636-B

7. Install overdrive clutch piston return spring retainer. Make sure retainer is fully seated.

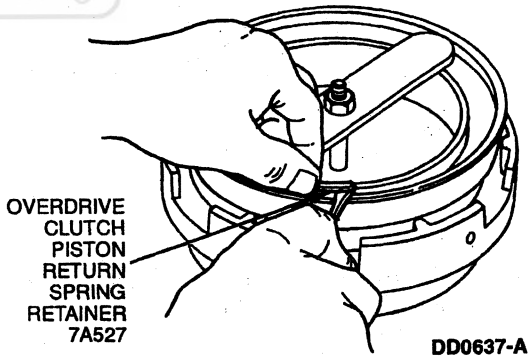

DD0637-A

8. Remove tool assembly.

Ford Motor Company Official Licensed Product

DISASSEMBLY (Continued)

Center Support

Disassembly

1. Remove two direct clutch seal rings and No. 6 center support thrust washer (7L326).

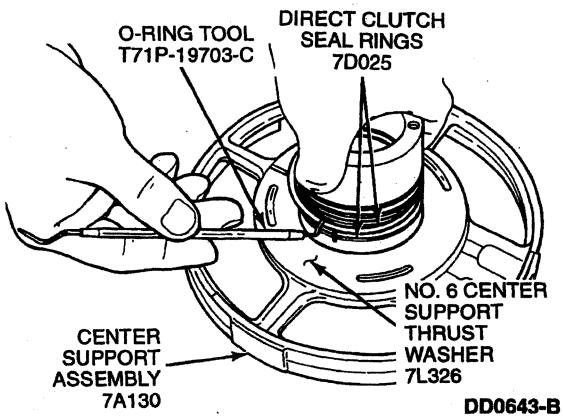

DD0643-B

2. Inspect No. 6 center support thrust washer, center support seal ring grooves, hub inner and outer diameters and feedbolt threads for contamination or damage. Clean or replace as necessary.
3. Inspect ball bearing inside center support for damage. Service as required.

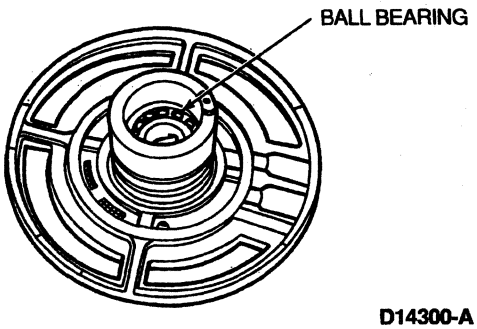

D14300-A

Assembly

1. Install No. 6 center support thrust washer using a light film of petroleum jelly to hold in place.
2. Install two new direct clutch seal rings.

Intermediate Band Assembly and Intermediate Brake Band Servo Assembly

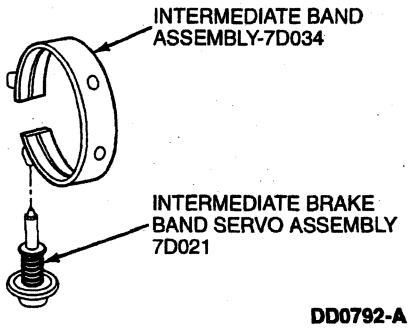

DD0792-A

- Inspect intermediate band assembly friction material. Service as required.
- Inspect intermediate brake band servo assembly piston seal. If damaged, replace entire servo assembly.

Forward Hub and Ring Gear

Disassembly

1. Remove No. 8C forward clutch hub thrust washer from front face of hub.

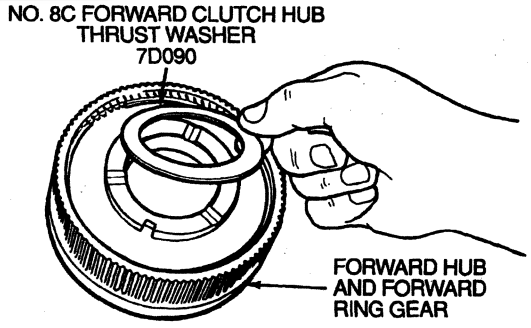

D9087-C

DISASSEMBLY (Continued)

2. Remove forward hub retaining ring using screwdriver.

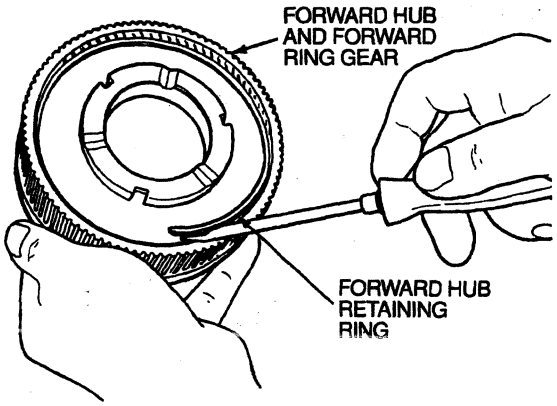

D9088-C

3. Remove forward hub from forward ring gear.

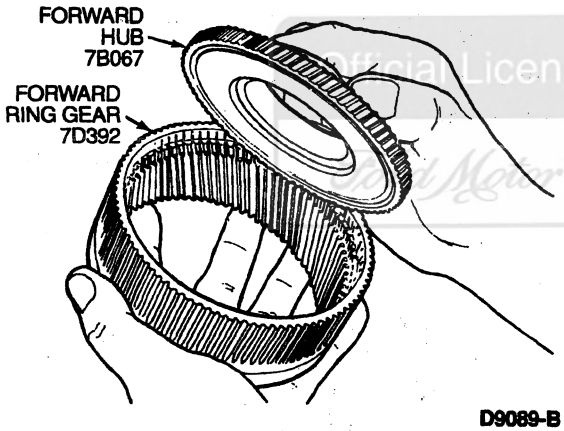

D9089-B

Assembly

1. Install forward hub into forward ring gear.

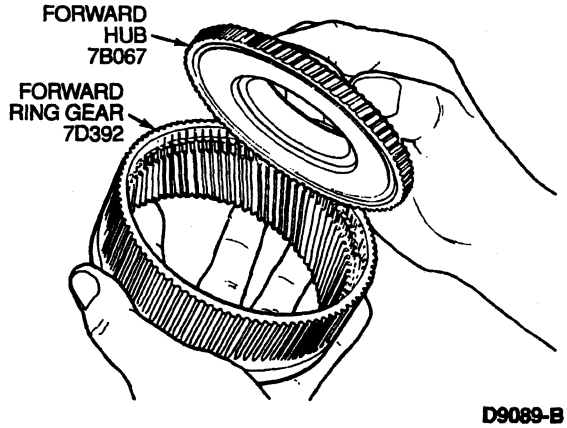

D9089-B

2. NOTE: Make sure forward hub retaining ring is fully seated in ring groove.

   Install forward hub retaining ring.

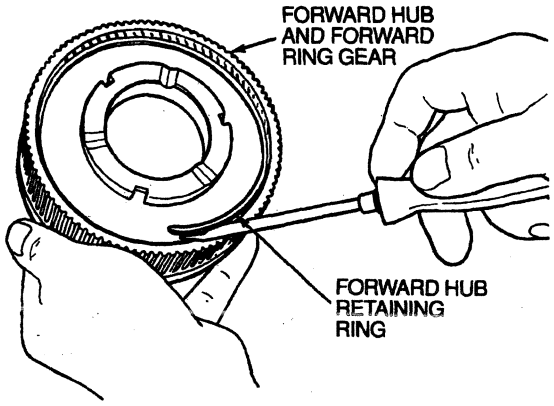

D9088-C

3. NOTE: Lightly lubricate thrust washer with petroleum jelly to hold it in place during assembly.

   Install No. 8C forward clutch hub thrust washer on the hub.

Direct Clutch Assembly and Intermediate Brake Drum

SPECIAL SERVICE TOOL(S) REQUIRED

Description	Tool Number
Clutch Spring Compressor	T65L-77515-A
O-Ring Tool	T71P-19703-C

Refer to the following disassembled view of the direct clutch and intermediate brake drum for component location and orientation.

Official Licensed Product Ford Motor Company

DISASSEMBLY (Continued)

Direct Clutch Assembly and Intermediate Brake Drum, Disassembled View

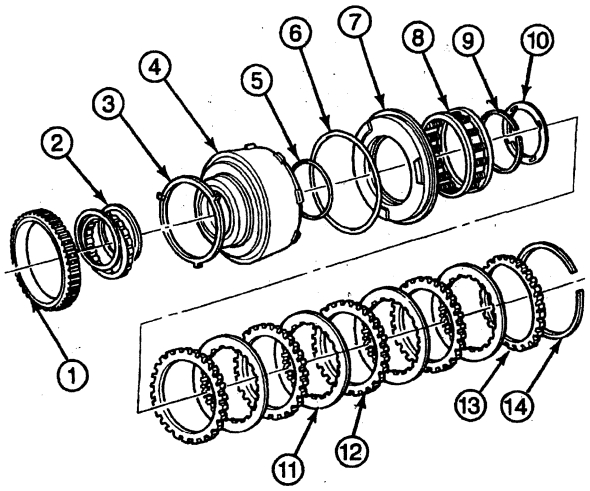

DD0793-A

Item	Part Number	Description
1	—	Intermediate One-Way Clutch Outer Race (Part of 7A089)
2	—	Intermediate One-Way Clutch (Part of 7A089)
3	7G401	Intermediate One-Way Clutch Thrust Washer (No. 7)
4	7D044	Intermediate Brake Drum
5	7A548	Direct Clutch Piston Inner Seal
6	7A548	Direct Clutch Piston Outer Seal
7	7A262	Direct Clutch Piston
8	7F235	Direct Clutch Return Spring Assy
9	7C122	Direct Clutch Return Spring Retaining Ring
10	7C096	Intermediate Brake Drum Thrust Washer (No. 8A)
11	7B164	Direct Clutch Internal Spline Plates — Friction
12	7B442	Direct Clutch External Spline Plates — Steel
13	7B066	Direct Clutch Pressure Plate
14	377126-S	Direct Clutch Pressure Plate Retaining Ring (Selective)

Disassembly

1. Remove intermediate one-way clutch outer race.

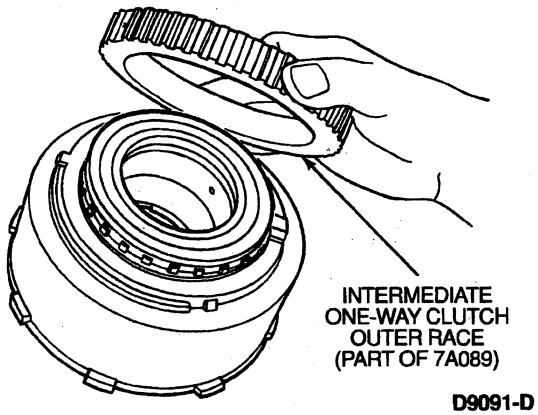

D9091-D

2. Remove top end cap and intermediate one-way clutch.

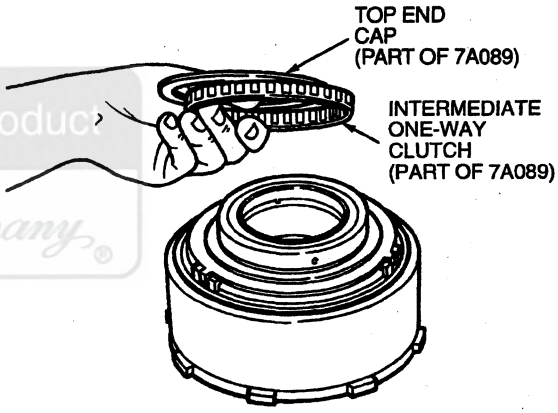

DD0794-A

3. Remove bottom end cap.

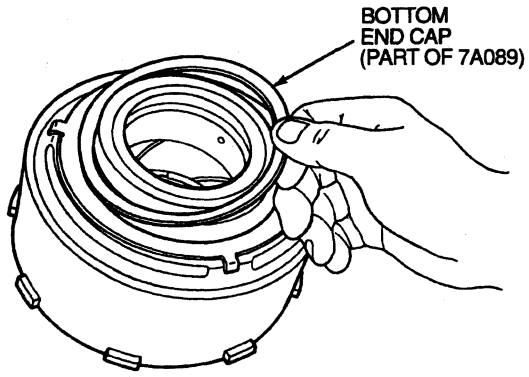

D9093-B

Official Licensed Product Ford Motor Company

DISASSEMBLY (Continued)

4. Remove No. 7 intermediate one-way clutch thrust washer from rear face of intermediate brake drum.

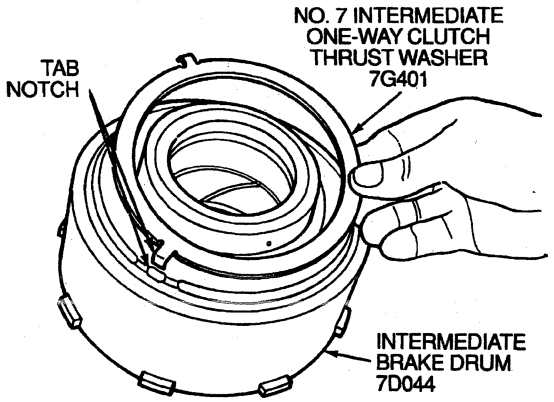

D9094-E

5. Remove No. 8A intermediate brake drum thrust washer from front face of intermediate brake drum.

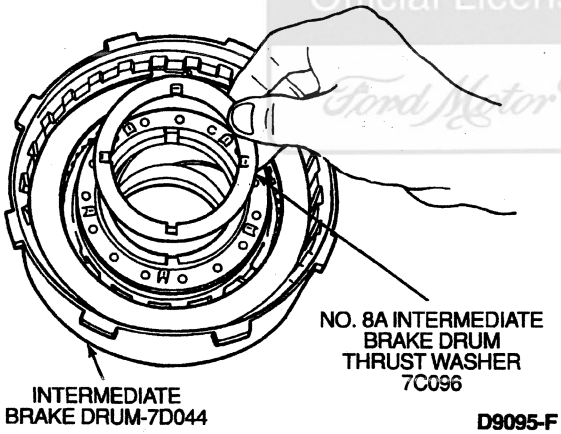

D9095-F

6. Remove direct clutch pressure plate retaining ring using screwdriver.

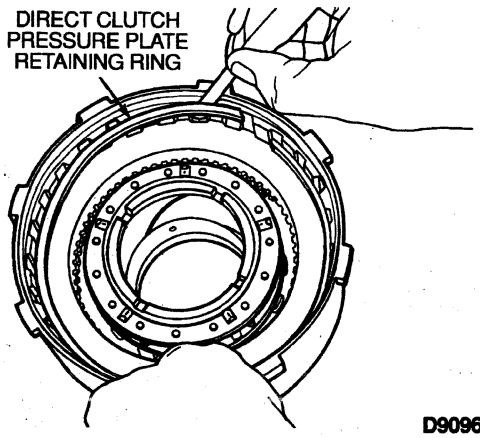

D9096-D

7. Remove direct clutch pressure plate and clutch pack. Tag for reassembly.

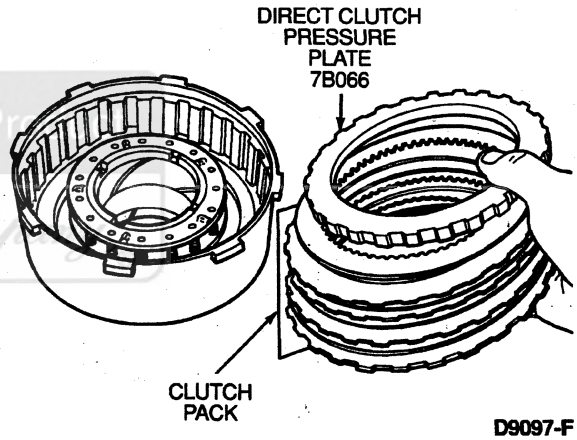

D9097-F

8. **CAUTION: Do not fully compress the return springs.**

   Using Clutch Spring Compressor T65L-77515-A, compress direct clutch return spring assembly and remove direct clutch return spring retaining ring. Remove compressor tool.

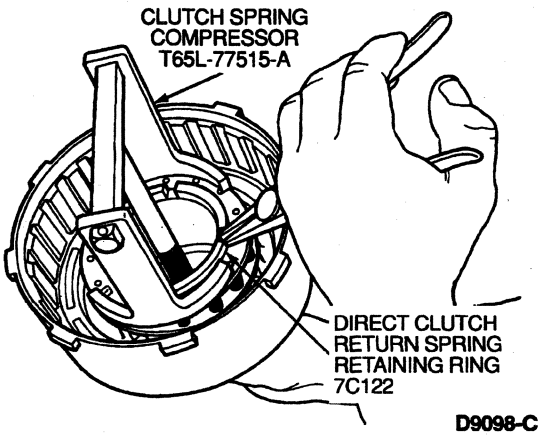

D9098-C

Official Licensed Product
Ford Motor Company

DISASSEMBLY (Continued)

9. Remove direct clutch return spring assembly.

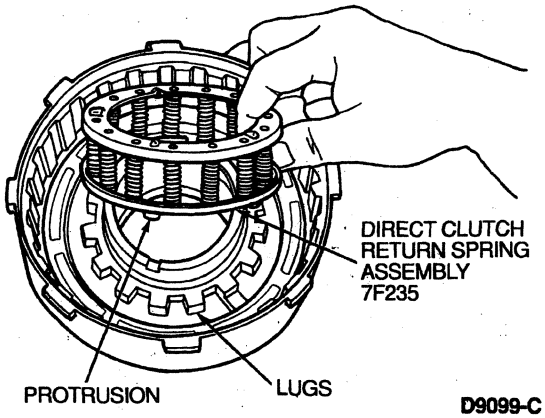

D9099-C

10. Remove direct clutch piston from intermediate brake drum.

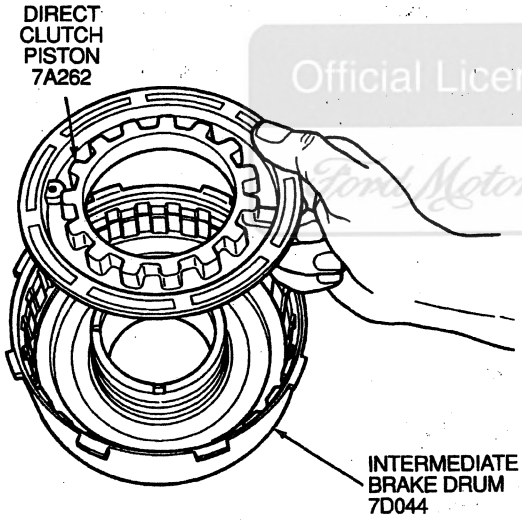

D9100-D

11. Remove inner and outer direct clutch piston seals from intermediate brake drum using O-Ring Tool T71P-19703-C.

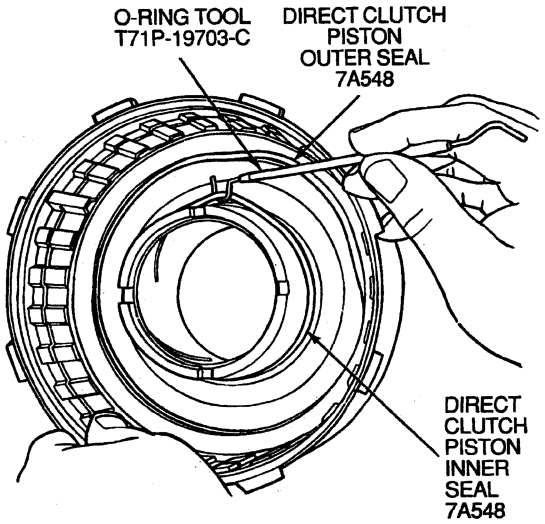

D9101-C

Assembly

1. Install direct clutch piston inner seal into intermediate brake drum with seal lip facing downward.

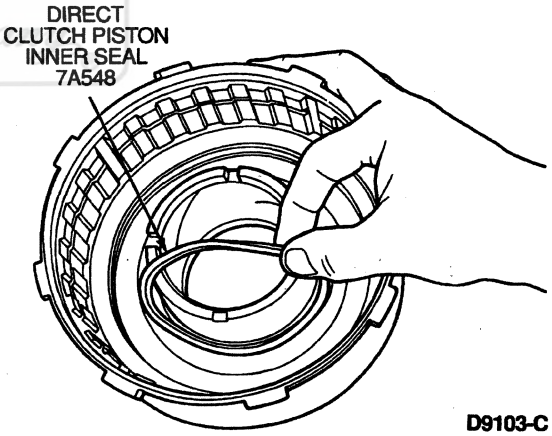

D9103-C

Official Licensed Product Ford Motor Company

DISASSEMBLY (Continued)

2. Install direct clutch piston outer seal into intermediate brake drum with seal lip facing downward.

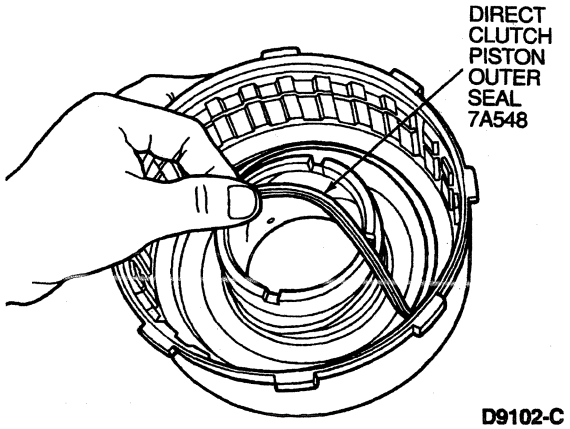

D9102-C

3. Inspect direct clutch piston check ball for freedom of movement and proper seating. Clean with solvent if necessary. Replace direct clutch piston if damaged.
4. NOTE: Piston should rotate freely in drum.

   Install direct clutch piston into intermediate brake drum.

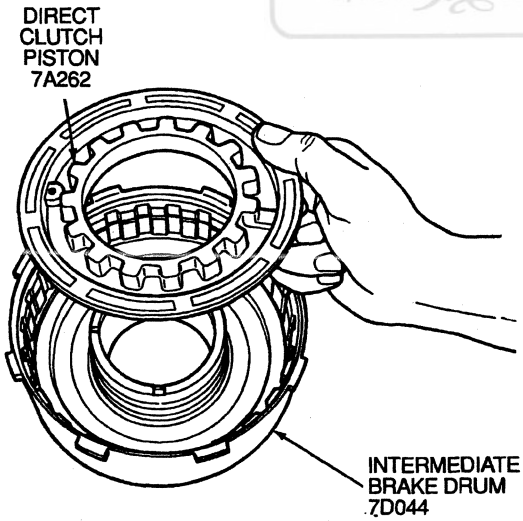

D9100-D

5. NOTE: Make sure protrusions on spring retainer are properly engaged with lugs on direct clutch piston.

   Install direct clutch return spring assembly.

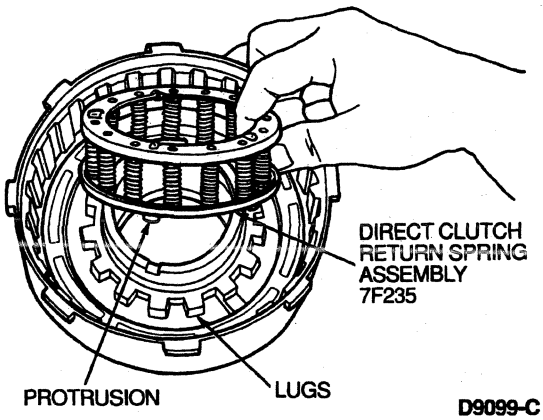

D9099-C

6. **CAUTION: Do not fully compress the return springs.**

   Compress direct clutch return spring assembly using Clutch Spring Compressor T65L-77515-A. Install direct clutch return spring retaining ring, then remove compressor tool.

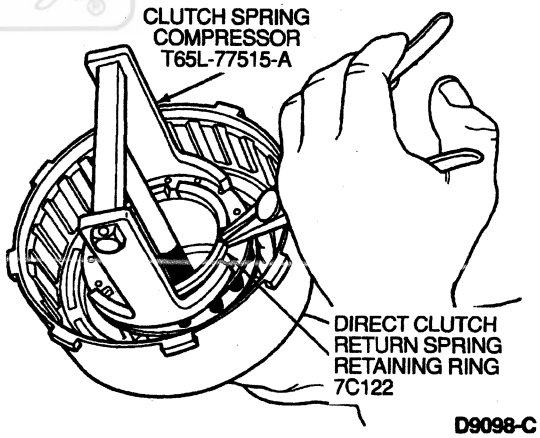

D9098-C

Official Licensed Product
Ford Motor Company

DISASSEMBLY (Continued)

7. **CAUTION: Mixing or using friction plates without lube grooves will cause shift concerns and can cause damage.**

   NOTE: The direct clutch friction plates have lube grooves in the friction material.

   NOTE: Soak the clutch plates with clean Motorcraft MERCON® Multi-Purpose Automatic Transmission Fluid XT-2-QDX or MERCON® equivalent for fifteen minutes.

   Install three, four or five plate clutch pack (depending on model), starting with steel plate and alternating with friction plates. Install direct clutch pressure plate.

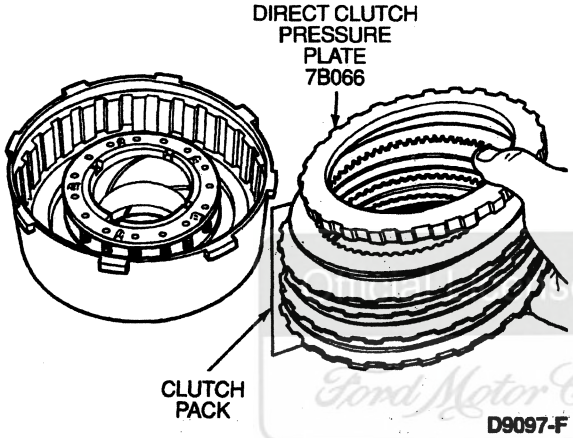

D9097-F

8. Install selective retaining ring. Check stack-up in three positions 120 degrees apart using feeler gauge. If clearance is not 2.06-1.14 mm (0.081-0.045 inch), install correct selective retaining ring and recheck clearance. Refer to the Specifications portion of this section for selective snap ring thicknesses and part numbers.

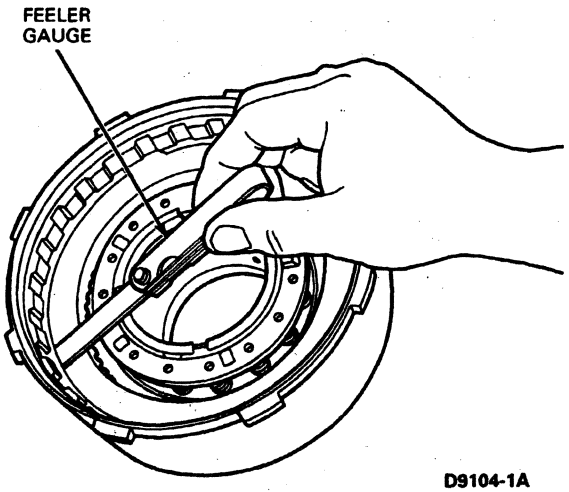

D9104-1A

9. Install No. 7 intermediate one-way clutch large thrust washer on face of intermediate brake drum.

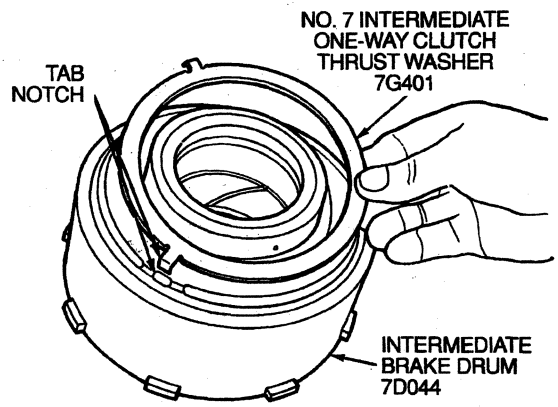

D9094-E

10. NOTE: Top and bottom end caps are identical.

    Install bottom end cap.

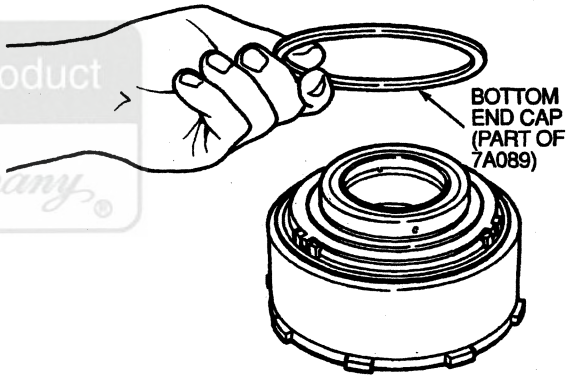

D10705-B

11. NOTE: Lip on the intermediate one-way clutch must face upward.

    Install intermediate one-way clutch. Install top end cap.

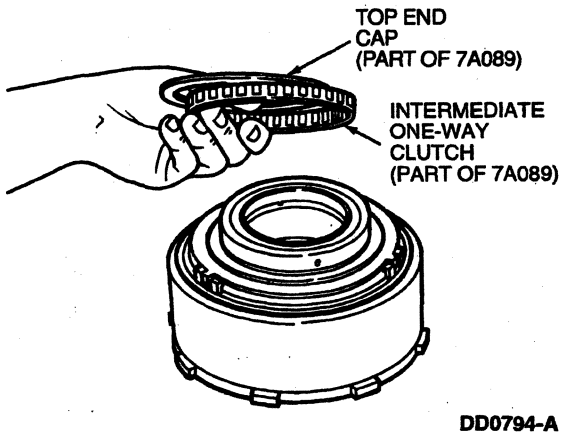

DD0794-A

Ford Motor Company

DISASSEMBLY (Continued)

12. NOTE: Shoulder on intermediate one-way clutch outer race must face upward.
    Install intermediate one-way clutch outer race and check that it turns **counterclockwise.**

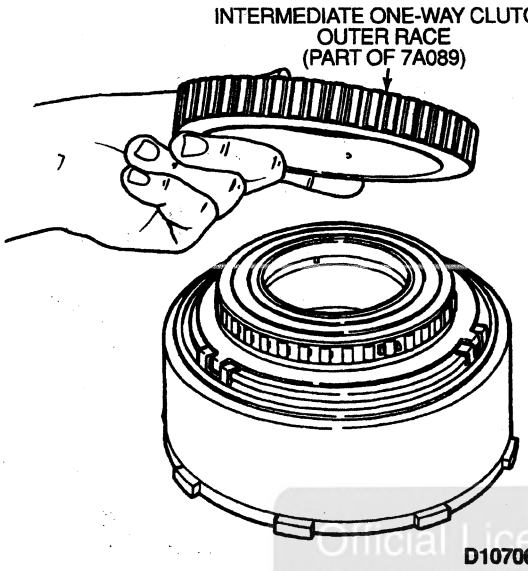

D10706-C

13. NOTE: Lightly lubricate thrust washer with petroleum jelly to hold it in place during assembly.
    Install No. 8A intermediate brake drum thrust washer on face of intermediate brake drum.

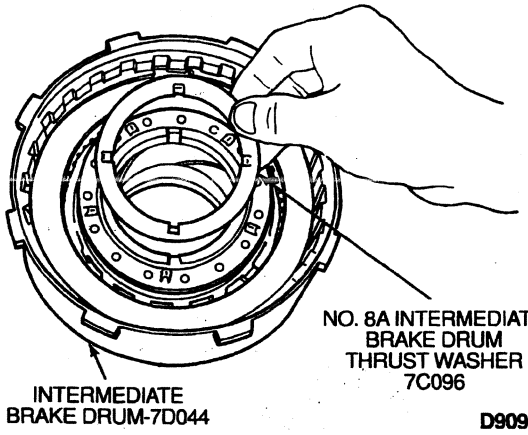

D9095-F

Forward Clutch Assembly

SPECIAL SERVICE TOOL(S) REQUIRED

Description	Tool Number
O-Ring Tool	T71P-19703-C
Lip Seal Protector	T77L-77548-A

Refer to the following disassembled view of the forward clutch assembly for component location and orientation.

Forward Clutch Assembly, Disassembled View

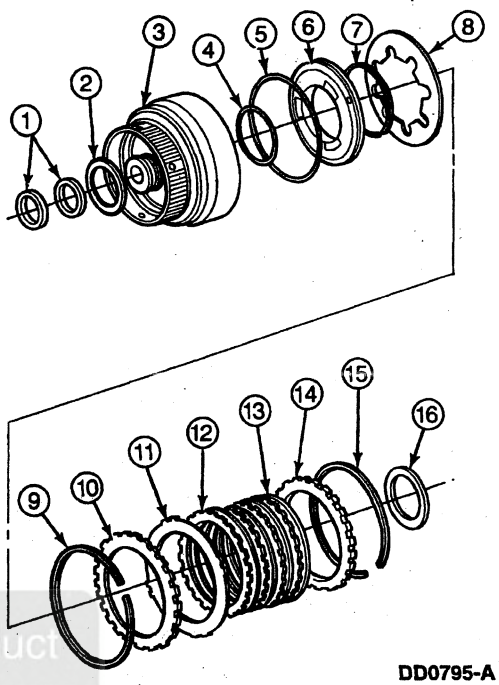

DD0795-A

Item	Part Number	Description
1	7D019	Forward Clutch Cylinder Seals
2	7F374	Forward Clutch Needle Thrust Bearing Assy (No. 8B)
3	7A360	Forward Clutch Cylinder
4	7A548	Forward Clutch Piston, Inner Seal
5	7A548	Forward Clutch Piston, Outer Seal
6	7A262	Forward Clutch Piston
7	7D256	Forward Clutch Piston Apply Ring
8	7B070	Forward Clutch Piston Return Spring
9	377127-S	Forward Clutch Piston Return Spring Retaining Ring
10	7B066	Forward Clutch Pressure Plate — Bottom
11	7E085	Forward Clutch Pressure Spring
12	7B442	Forward Clutch External Spline, Plate — Steel
13	7B164	Forward Clutch Internal Spline Plates — Friction
14	7B066	Forward Clutch Pressure Plate — Top
15	377127-S	Forward Clutch Pressure Plate Retaining Ring (Selective Fit)

(Continued)

Official Licensed Product

DISASSEMBLY (Continued)

Item	Part Number	Description
16	7D234	Forward Clutch Thrust Bearing (No. 9A)

Disassembly

1. Remove the No. 9A forward clutch thrust bearing from the inner face of the forward clutch cylinder.

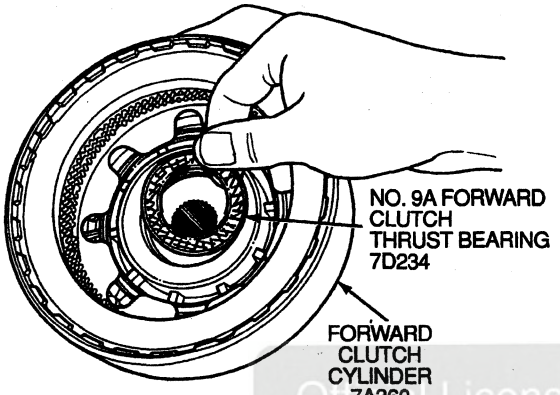

DD0644-A

2. Remove No. 8B forward clutch needle bearing assembly.

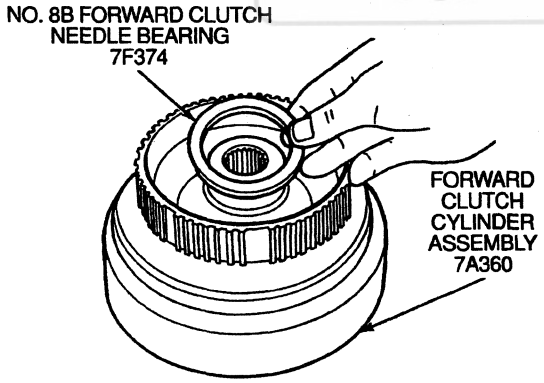

D9275-D

3. Remove two interlocking forward clutch cylinder seals from grooves.

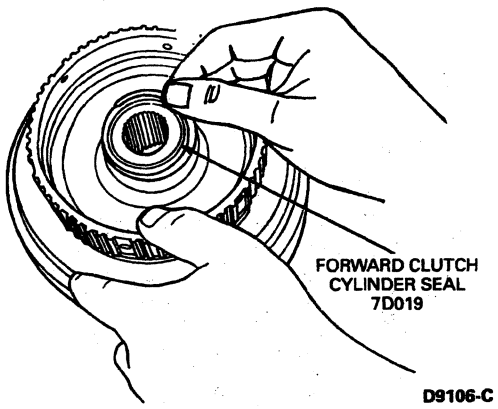

D9106-C

4. Remove forward clutch pressure plate retaining ring.

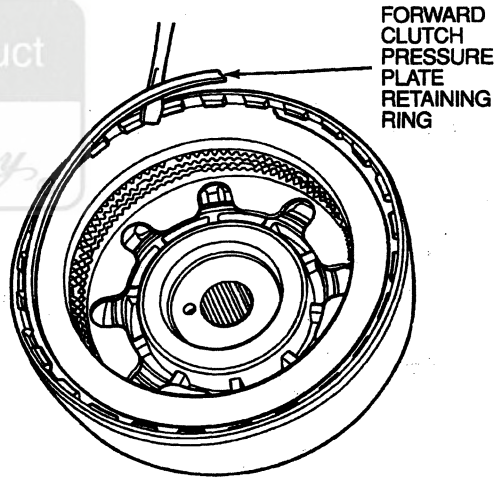

D9107-C

Official Licensed Product
Ford Motor Company

DISASSEMBLY (Continued)

5. Remove top forward clutch pressure plate, three or four plate clutch pack, (depending on vehicle application), forward clutch pressure spring and plate. Tag for reassembly.

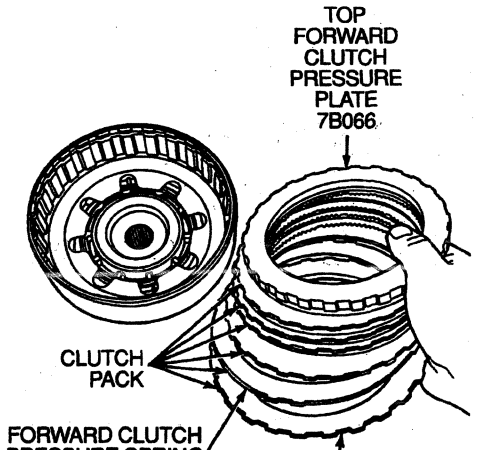

D9108-E

6. Remove forward clutch piston return spring retaining ring.

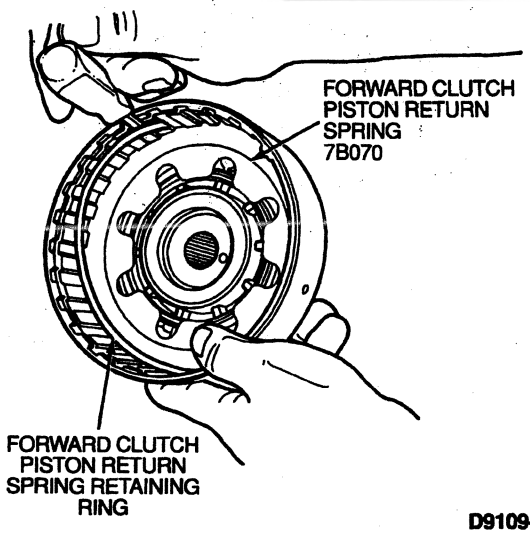

D9109-D

7. Remove forward clutch piston return spring.

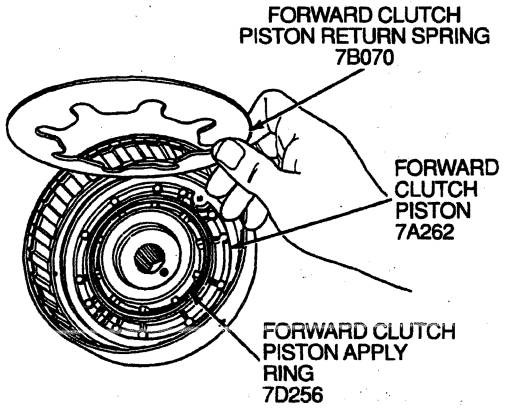

D9110-C

8. Remove forward clutch piston apply ring from forward clutch piston groove.

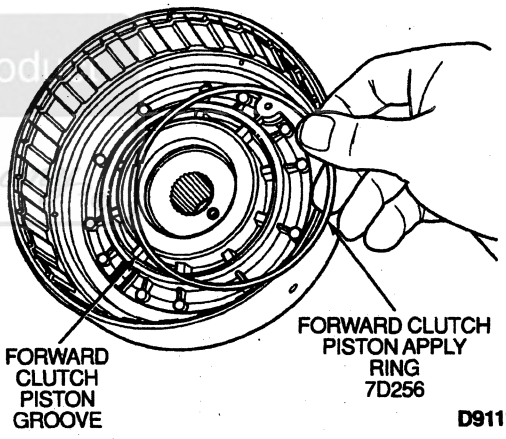

D9111-C

Official Licensed Product
Ford Motor Company

DISASSEMBLY (Continued)

9. Remove forward clutch piston from cylinder using compressed air.

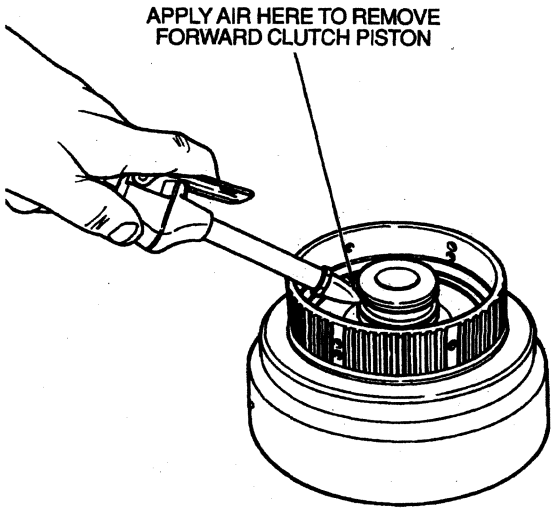

D10707-C

10. Remove outer forward clutch piston seal from forward clutch piston.

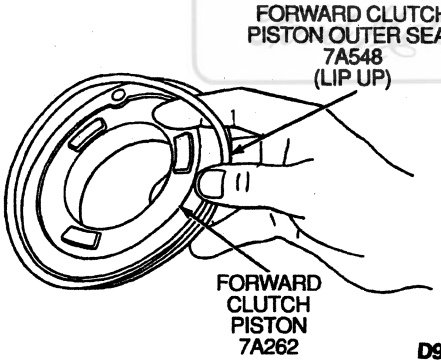

D9113-D

11. Remove forward clutch piston inner seal from the forward clutch cylinder using O-Ring Tool T71P-19703-C.

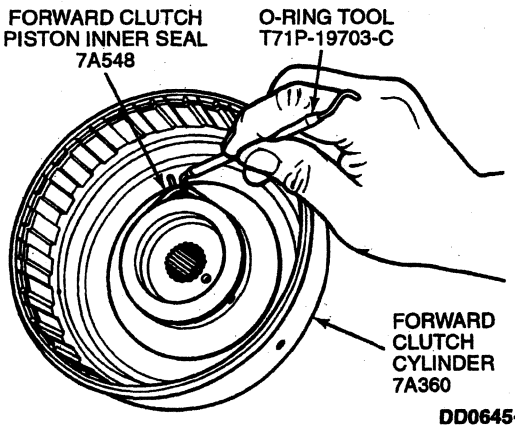

DD0645-A

Assembly

1. Install forward clutch piston inner seal onto front clutch cylinder.

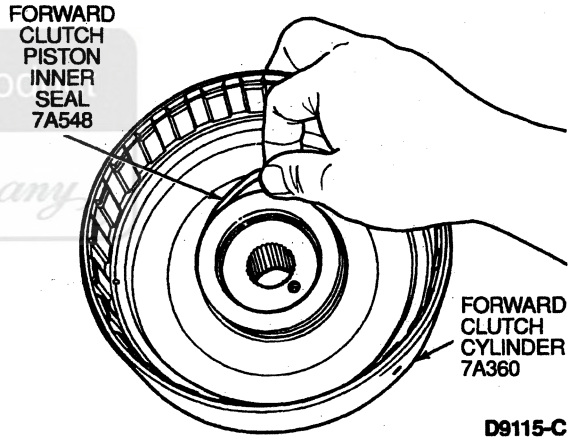

D9115-C

2. Inspect forward clutch piston check ball for freedom of movement and proper seating. Replace forward clutch piston assembly if necessary. Clean with a suitable solvent if necessary.

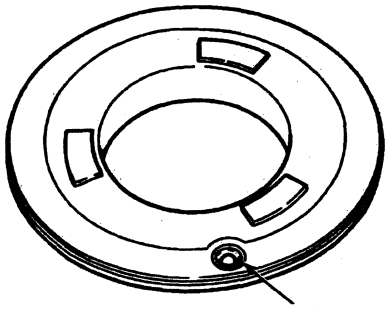

D10708-B

DISASSEMBLY (Continued)

3. Install forward clutch piston outer seal on forward clutch piston with lip facing upward as shown.

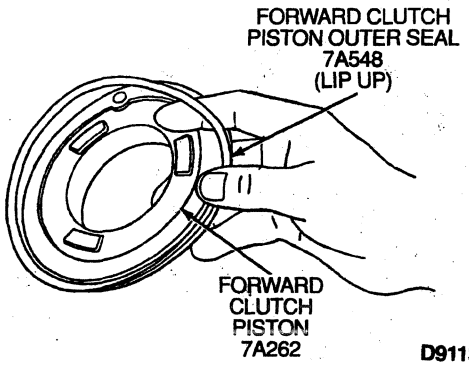

D9113-D

4. Install forward clutch piston into forward clutch cylinder using Lip Seal Protector T77L-77548-A.

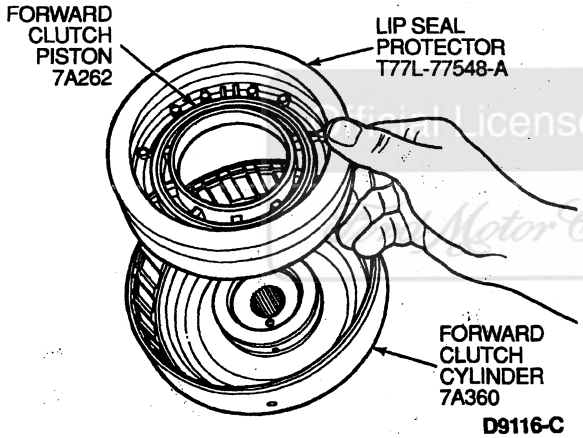

D9116-C

5. Install steel forward clutch piston apply ring into forward clutch piston groove.

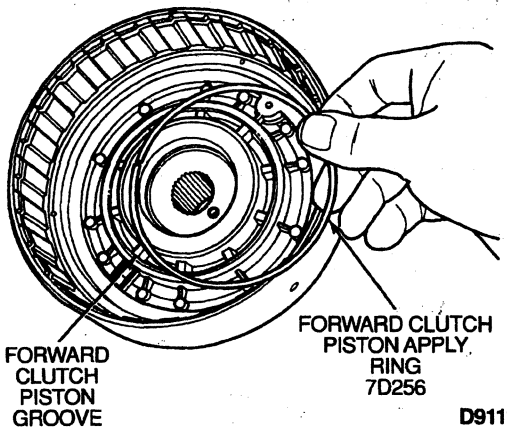

D9111-C

6. **CAUTION: To ensure durability, the notch between the piston return spring fingers must be positioned so that both ends of the forward clutch piston apply ring are visible.**

Install forward clutch piston return spring with the spring fingers against the forward clutch piston apply ring.

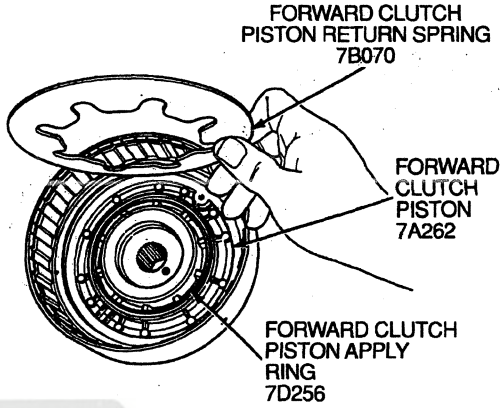

D9110-C

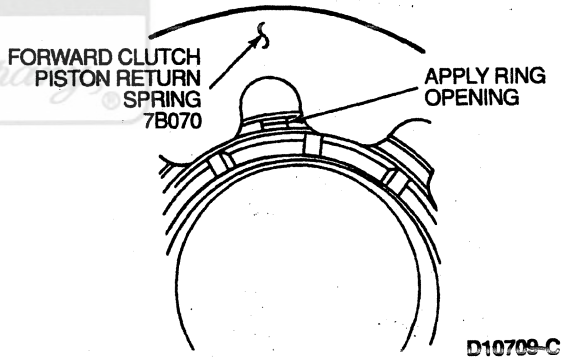

D10709-C

Official Licensed Product

DISASSEMBLY (Continued)

7. Install forward clutch piston return spring retaining ring. Verify proper seating in groove.

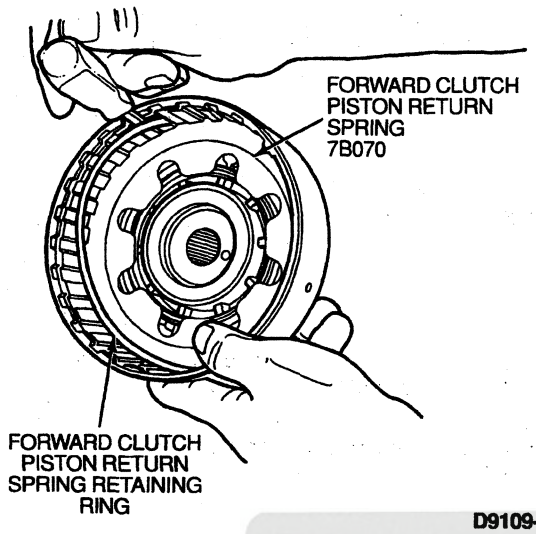

D9109-D

8. Install bottom forward clutch pressure plate (beveled face downward).
9. Install forward clutch pressure spring.
10. NOTE: Soak the clutch plates with clean Motorcraft MERCON® Multi-Purpose Automatic Transmission Fluid XT-2-QDX or MERCON® equivalent.

    Install clutch pack (the number of plates are model dependent).
11. Install top forward clutch pressure plate.

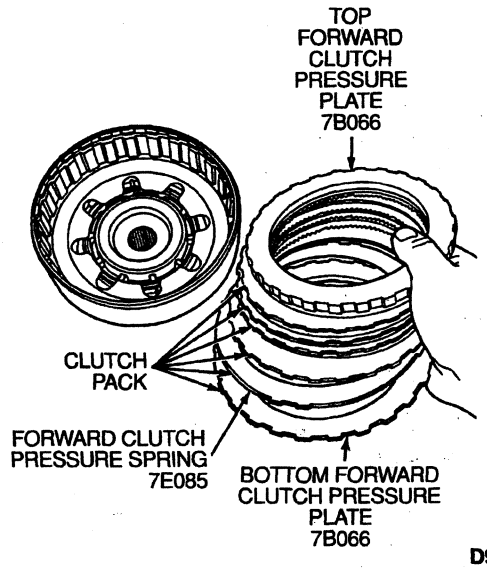

D9108-E

12. Install forward clutch pressure plate retaining ring.
13. Using feeler gauge, check stack-up clearance in three positions 120 degrees apart. If clearance is not 1.40-0.76 mm (0.055-0.030 inch), install correct retaining ring and recheck clearance. Refer to the Specifications portion of this section for selective snap ring thicknesses and part numbers.

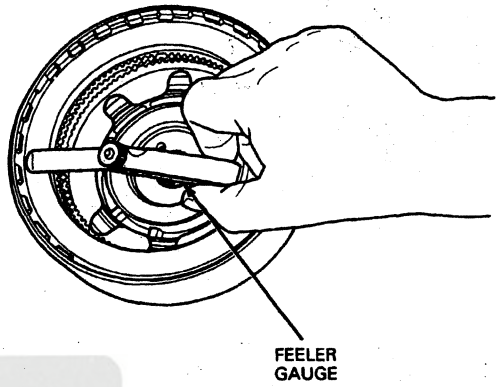

D7877-1A

14. NOTE: Lightly lubricate the needle bearing with petroleum jelly to hold it in place during assembly.

    Install No. 8B forward clutch needle bearing assembly with large I.D. radius facing inward.

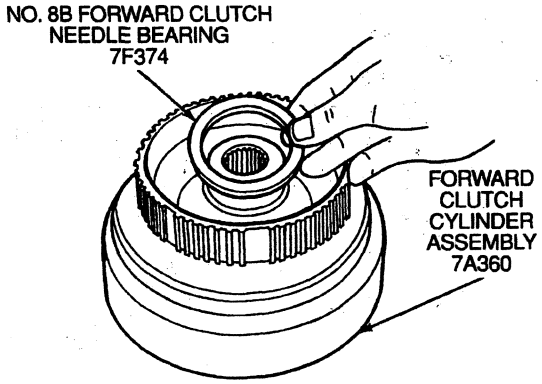

D9275-D

Official Licensed Product Motor Company

DISASSEMBLY (Continued)

15. NOTE: Stagger the interlocking opening on the seals 180 degrees apart when installed.

    Install two new cast iron forward clutch cylinder seals in grooves.

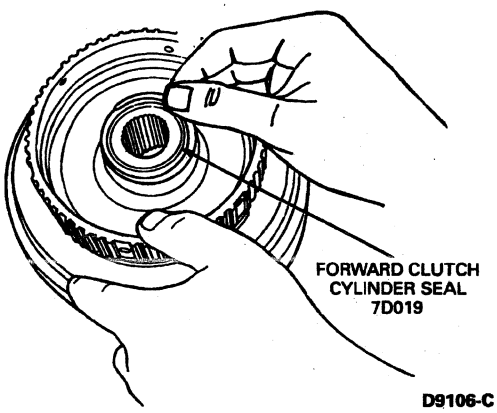

D9106-C

16. NOTE: Lightly lubricate thrust bearing with petroleum jelly to hold it in place during assembly.

    Install No. 9A forward clutch thrust bearing on inner face of forward clutch cylinder, with black side facing up.

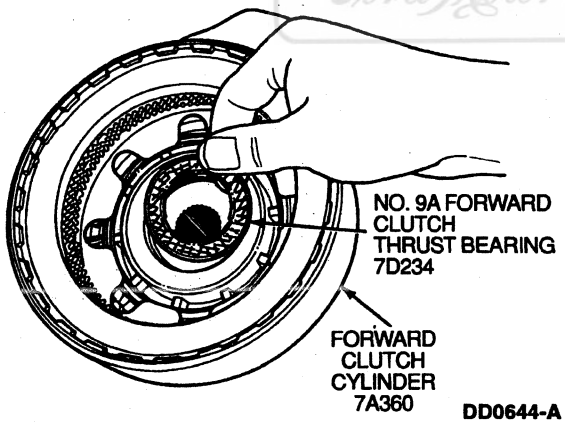

DD0644-A

Output Shaft

Disassembly and Assembly

NOTE: The anti-seepage seal on the original equipment output shaft (7060) is intended for shipping purposes only. It is not necessary to remove and reuse this seal when replacing the output shaft.

D16548-A

The output shaft cannot be disassembled. The output shaft must be replaced, if damaged.

Inspect the output shaft for wear. Make sure the cup plug orifice is clean and free of debris. Service as required.

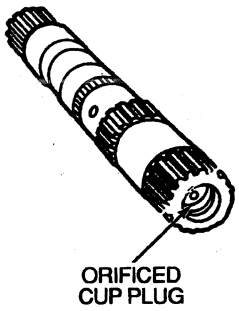

D14301-A

Forward Planet Assembly

Disassembly

1. Remove No. 9B forward clutch thrust bearing from forward planet assembly.

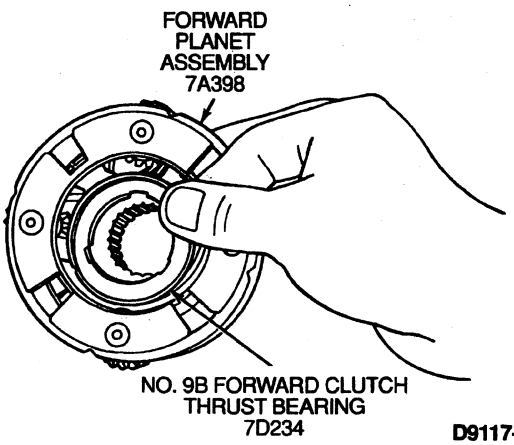

D9117-E

Ford Motor Company

DISASSEMBLY (Continued)

2. Remove No. 10A forward planet assembly thrust bearing from front side of forward planet assembly.

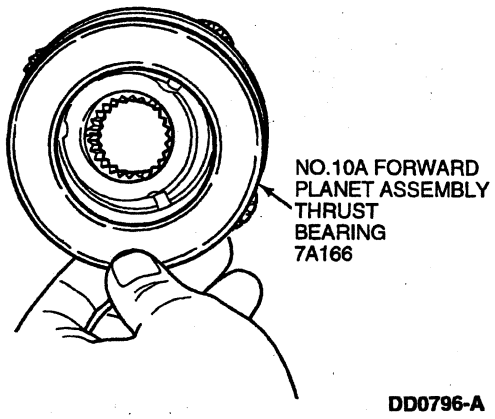

DD0796-A

Assembly

1. NOTE: Lightly lubricate thrust bearing with petroleum jelly to hold it in place during assembly.

   Place No. 10A forward planet assembly thrust bearing on front side of forward planet assembly.

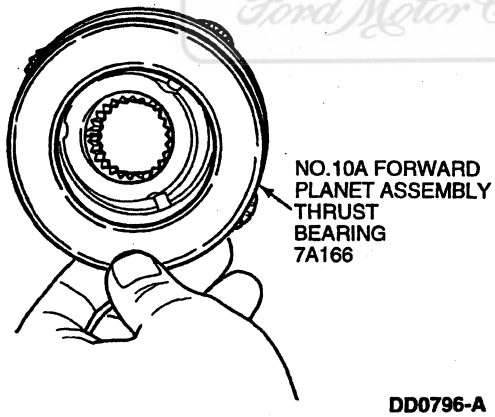

DD0796-A

2. NOTE: Install notched inner race facing outward and large O.D. radius facing inward.

   Install No. 9B forward clutch thrust bearing on inner face of forward planet assembly.

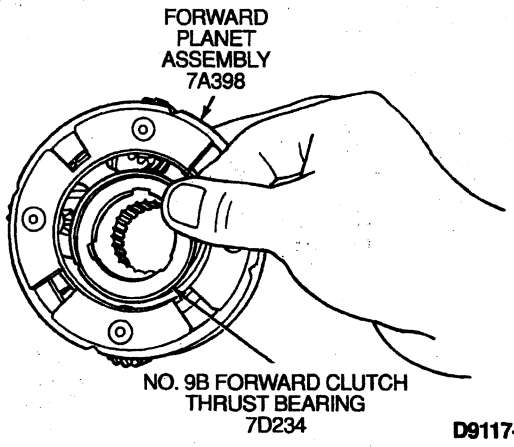

D9117-E

Input Shell

Disassembly

1. If so equipped, remove and **discard** retaining ring from forward / reverse sun gear using retaining ring pliers.

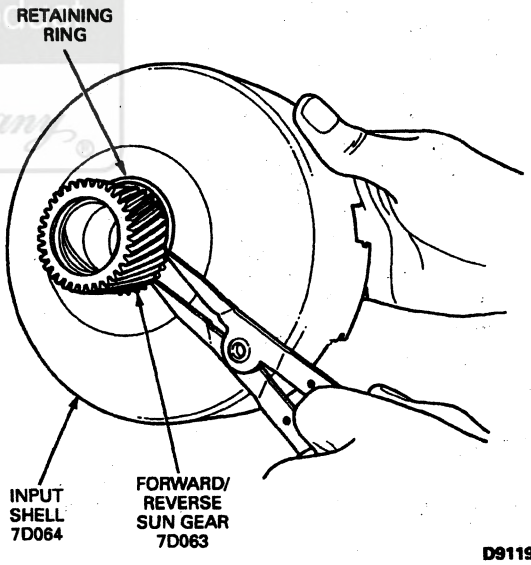

D9119-D

Ford Motor Company

DISASSEMBLY (Continued)

2. Remove No. 14 input shell thrust washer (7D066) from input shell.

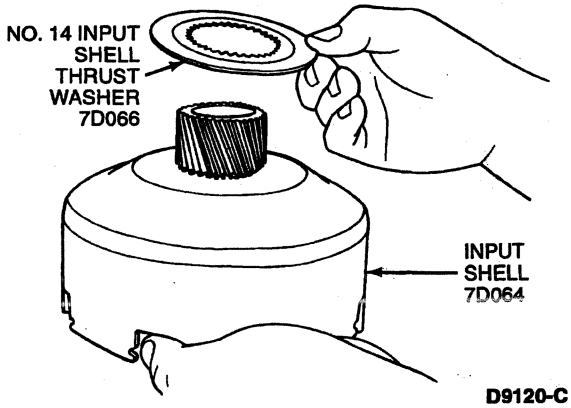

D9120-C

3. Remove forward/reverse sun gear from input shell.

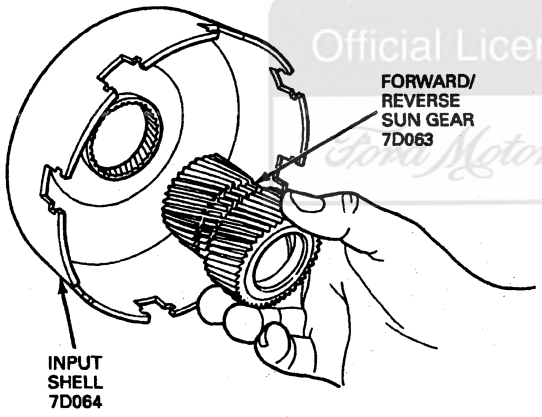

D9121-B

Assembly

1. Install forward/reverse sun gear, so that lube hole in gear is between stand-off pads on input shell.

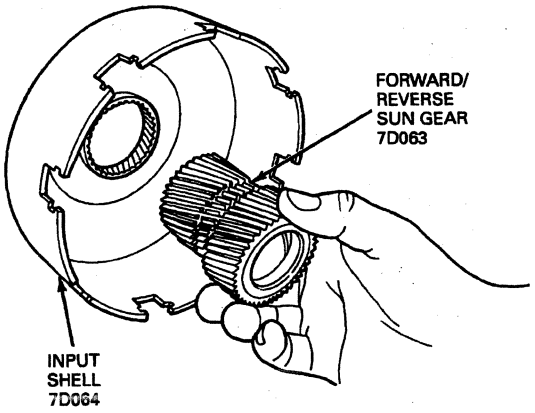

D9121-B

2. NOTE: If forward/reverse sun gear has no retaining ring, lightly lubricate thrust washer with petroleum jelly to hold it in place during assembly.

   Install No. 14 input shell thrust washer onto forward/reverse sun gear.

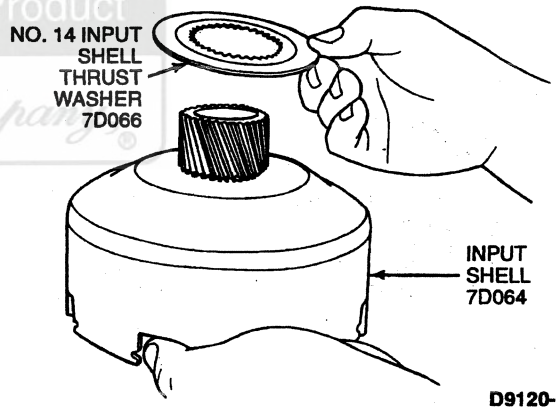

D9120-C

Official Licensed Product Ford Motor Company

DISASSEMBLY (Continued)

3. **CAUTION: Use care not to overextend retaining ring.**

   If so equipped, Install **new** retaining ring onto forward / reverse sun gear using retaining ring pliers.

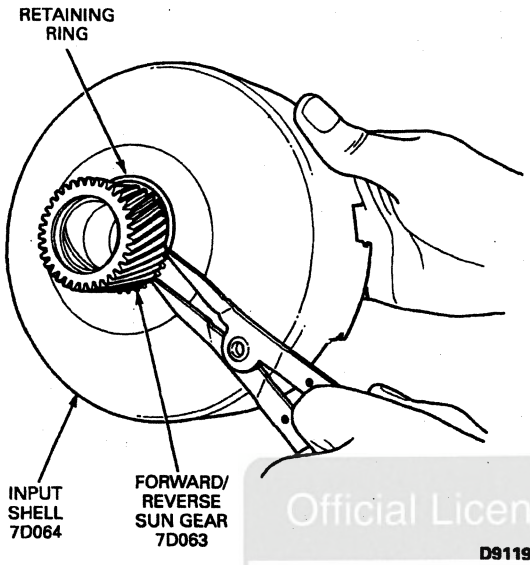

Reverse Planet Assembly

Disassembly

1. Remove No. 11 rear reverse planet thrust washer.

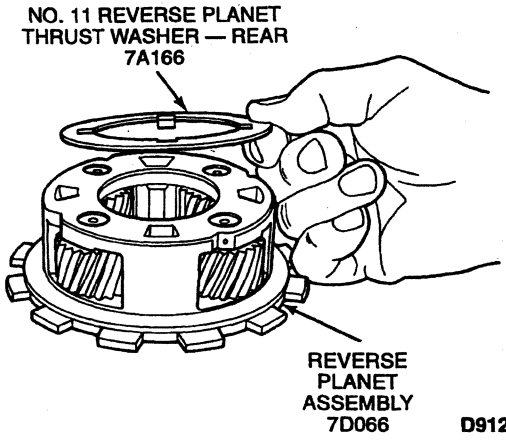

2. Remove No. 10B front reverse planet thrust washer.

Assembly

1. NOTE: Lightly lubricate thrust washer with petroleum jelly to hold it in place during assembly.

   Install No. 10B front reverse planet thrust washer with tabs positioned in slots on reverse planet (7D006) assembly.

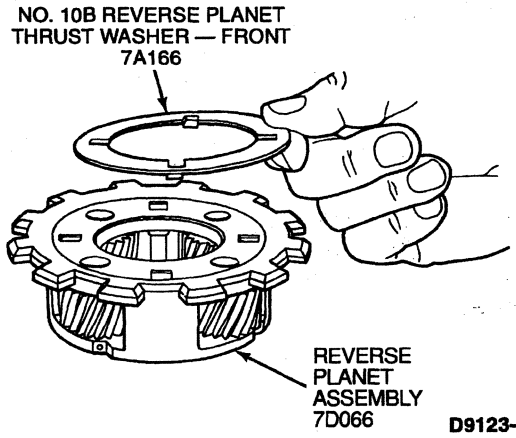

2. NOTE: Lightly lubricate thrust washer with petroleum jelly to hold it in place during assembly.

   Install No. 11 rear reverse planet thrust washer with tabs positioned into slots on reverse planet assembly.

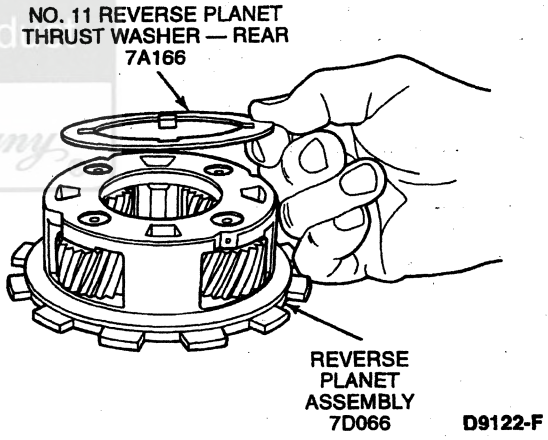

Reverse Clutch

Disassembly and Assembly

The reverse clutch is removed and installed during disassembly and assembly of the transmission (7003). Refer to Transmission in the Disassembly and Assembly portion of this section.

Extension Housing

Disassembly and Assembly

The extension housing (7A039) is disassembled and assembled during the disassembly and assembly of the transmission. Refer to Transmission in the Disassembly and Assembly portions of this section.

Low One-Way Clutch Assembly

Refer to the following disassembled view of the low / reverse one-way clutch assembly and piston for component location and orientation.

Official Licensed Product
Ford Motor Company

DISASSEMBLY (Continued)

Low/Reverse One-Way Clutch Assembly and Piston, Disassembled View

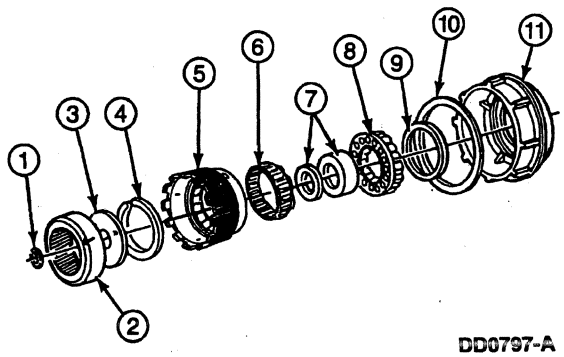

DD0797-A

Item	Part Number	Description
1	387031-S	Output Shaft Retaining Ring
2	7A153	Output Shaft Ring Gear
3	7D164	Output Shaft Hub
4	377132-S	Retaining Ring
5	7B067	Reverse Clutch Hub
6	7A089	Low One-Way Clutch Assy
7	7G178	Low/Reverse One-Way Clutch Inner Race and Thrust Bearing Assy (No. 12)
8	7D406	Reverse Clutch Return Spring Assy
9	7D404	Reverse Clutch Piston Inner Lip Seal
10	7D403	Reverse Clutch Piston Outer Lip Seal
11	7D402	Reverse Clutch Piston

Disassembly

1. Remove output shaft ring gear (7A153) and No. 12 thrust bearing from reverse clutch hub.

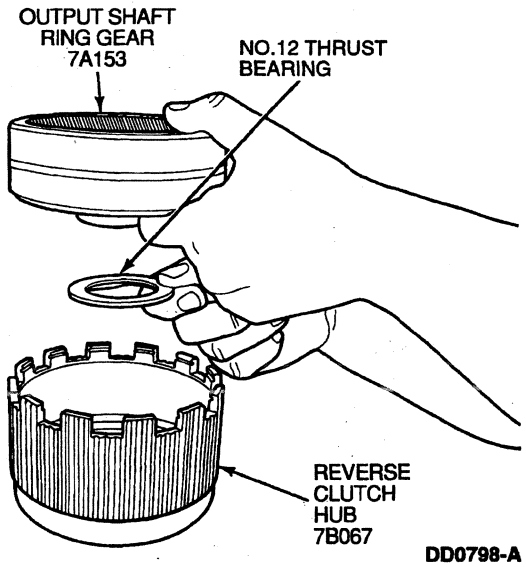

DD0798-A

2. If necessary, remove low one-way clutch assembly from reverse clutch hub.

   Rotate low one-way clutch assembly counterclockwise and remove from the rear of the reverse clutch hub.

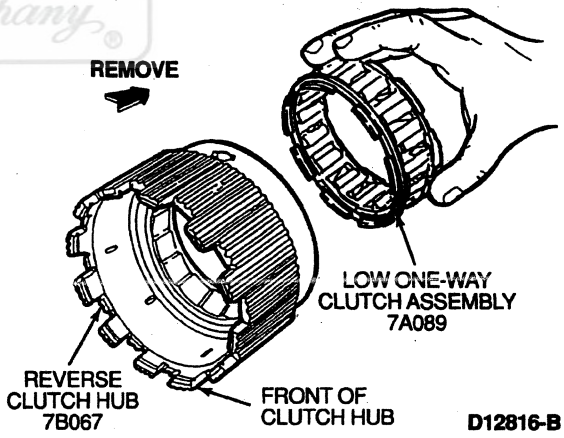

D12816-B

DISASSEMBLY (Continued)

Assembly

1. NOTE: Check reverse clutch hub thrust surfaces for scores and reverse clutch hub splines for wear. Replace all worn parts.

   NOTE: Inspect outer and inner low / reverse one-way clutch race for scores or damaged surface areas where rollers contact races. Inspect rollers and springs for excessive wear or damage. Inspect spring and cage.

   Install the low one-way clutch assembly through the rear of the reverse clutch hub, refer to the illustration for component orientation and direction of assembly. Seat low one-way clutch assembly carefully into reverse clutch hub, and rotate clockwise to seat bearings properly and lock tabs in place against the hub.

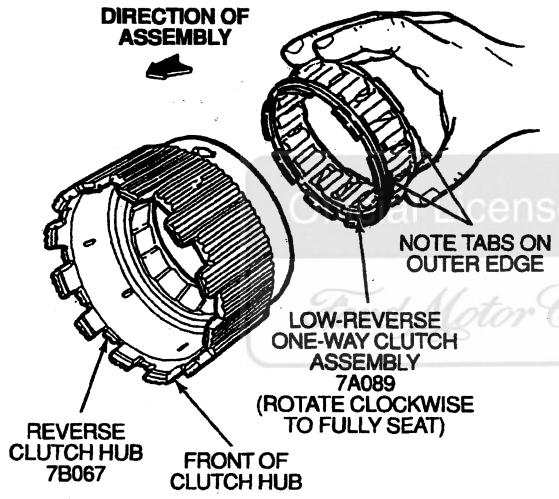

D12818-B

Reverse Clutch Piston

Disassembly

1. Remove reverse clutch piston outer lip seal.

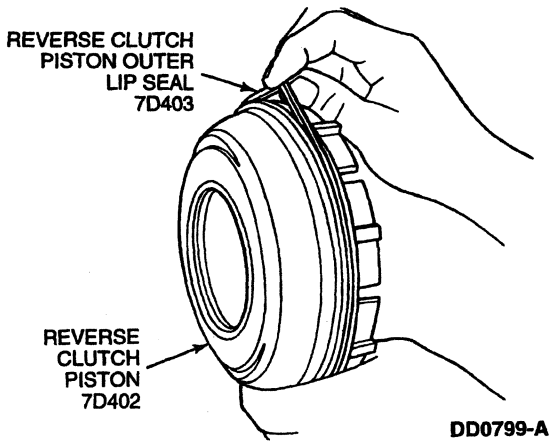

DD0799-A

2. Remove reverse clutch piston inner lip seal.

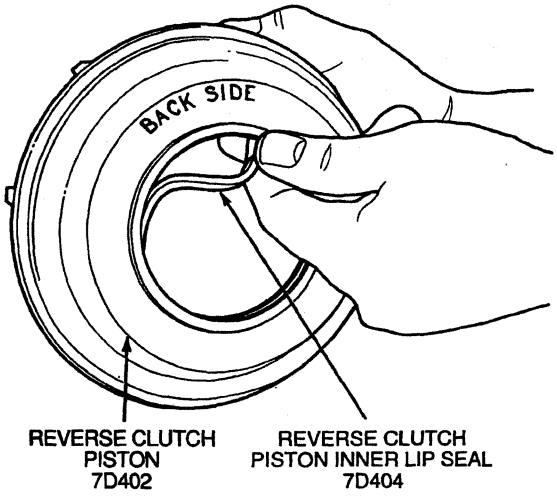

DD0800-A

Assembly

1. NOTE: Make sure lip on seal faces back side of piston.

   Install reverse clutch piston inner lip seal and reverse clutch piston outer lip seal.

Torque Converter Checks

Torque Converter Leakage Check

If welds on the torque converter (7902) indicate leakage, remove the torque converter and make the following check.

Assemble Rotunda Leak Test Kit 014-R1067 or equivalent to the torque converter. Test the torque converter for leaks, following the directions supplied with the kit.

Rotunda Leak Test Kit 014-R1067

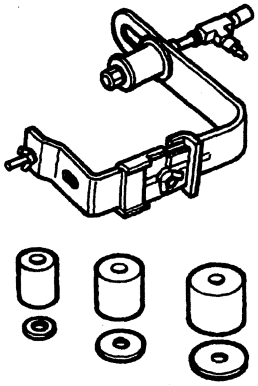

D9269-1A

DISASSEMBLY (Continued)

One-Way Clutch Check

SPECIAL SERVICE TOOL(S) REQUIRED

Description	Tool Number
Converter Clutch Holding Tool	T77L-7902-R
Converter Clutch Torquing Tool	T76L-7902-C

1. Insert the Converter Clutch Holding Tool T77L-7902-R in one of the grooves in the stator thrust washer.

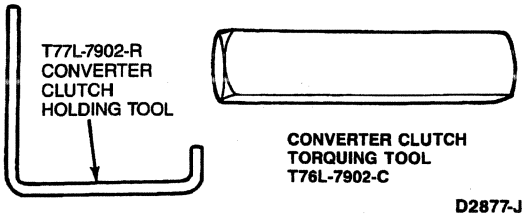

2. Insert Converter Clutch Torquing Tool T76L-7902-C in converter pump drive hub to engage one-way clutch inner race.
3. Attach a toque wrench to the converter clutch torquing tool. With the converter clutch holding tool held stationary, turn the torque wrench counterclockwise. The converter one-way clutch should lock up and hold a 13 N·m (10 lb-ft) force. The converter one-way clutch should rotate freely in a clockwise direction until torquing tool contacts the holding tool. Try the clutch for lock up and hold in at least five different locations around the converter.
4. If the clutch fails to lock up and hold a 13 N·m (10 lb-ft) torque, replace the torque converter unit.

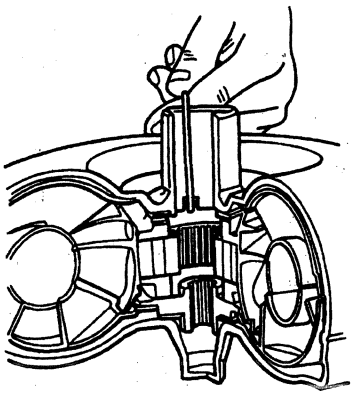

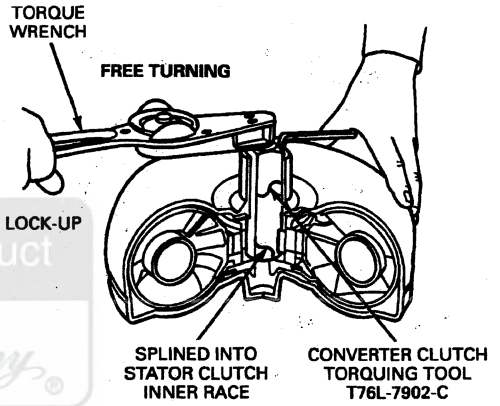

End Play Check

SPECIAL SERVICE TOOL(S) REQUIRED

Description	Tool Number
End Play Checking Tool	T80L-7902-A

1. Insert End Play Checking Tool T80L-7902-A into the converter pump drive hub until it bottoms.

DISASSEMBLY (Continued)

2. Expand the sleeve in the turbine spline by tightening the threaded inner post until the tool is securely locked into the spline.

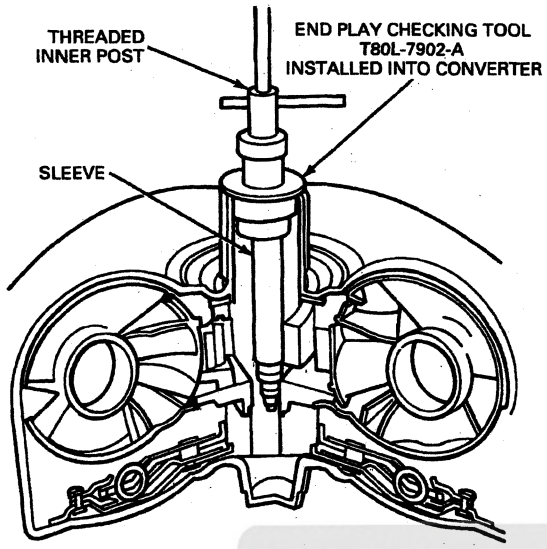

3. NOTE: Dial Indicator must be between ridges in next step.

   Attach Dial Indicator with Bracketry TOOL-4201-C or equivalent to the tool. Position the indicator button on the torque converter housing as shown in the following illustration and set the dial face at 0 (zero).

4. Lift the tool upward as far as it will go and note the indicator reading. The indicator reading is the total end play which the turbine and stator share. Replace the converter unit if the total end play exceeds the limits. Refer to end play specifications listed below.

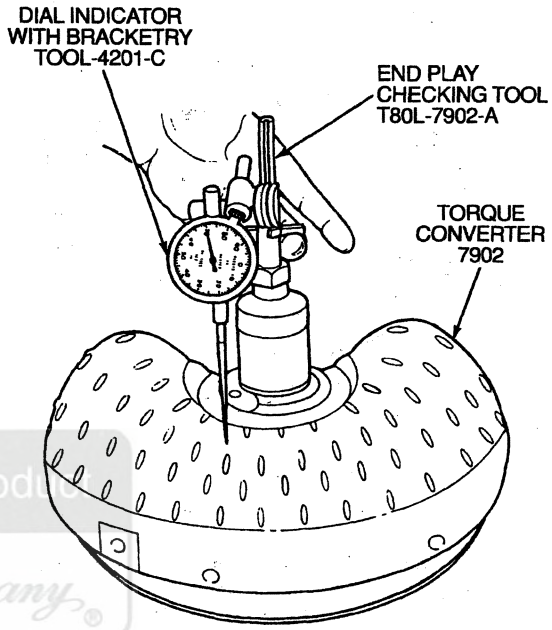

5. Loosen the threaded inner post to free the tool, and then remove the tool from the converter.

TORQUE CONVERTER END PLAY (E4OD)

Engine	New or Rebuilt Torque Converter		Used Torque Converter	
	mm	Inch	mm	Inch
Gas	0.35-0.96	0.014-0.038	1.8 Max.	0.071 Max.
7.3L DI Diesel	0.60-1.21	0.024-0.048	2.0 Max.	0.079 Max.

NOTE: If the torque converter is replaced, be aware that the torque converter is model dependent.

Stator to Impeller Interference Check (Gasoline Engine Applications Only)

1. NOTE: Stator support can remain in pump assembly during this test.

   Position the stator support on a bench with the spline end of the shaft pointing up.

2. NOTE: Torque converter must be positioned on top of stator as shown in the following illustration to properly perform this check.

   Mount a converter on the stator support with the splines on the one-way clutch inner race engaging the mating splines of the stator support.

Official Licensed Product Motorcraft Company

DISASSEMBLY (Continued)

3 Hold the stator support stationary and try to rotate the torque converter counterclockwise The torque converter should rotate freely without any signs of interference or scraping within the torque converter

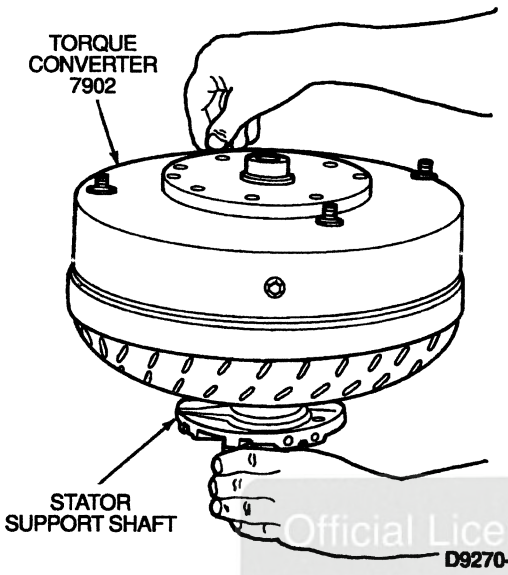

4 If there is an indication of scraping, the trailing edges of the stator blades might be interfering with the leading edges of the impeller blades In such cases, replace the torque converter

Stator to Turbine Interference Check (Gasoline Engine Applications Only)

1 NOTE Stator support can remain in pump assembly during this test

Position the torque converter on the bench stud side down

2 Install a stator support to engage the mating splines of the stator support shaft

3 Install the input shaft, engaging the splines with the turbine hub

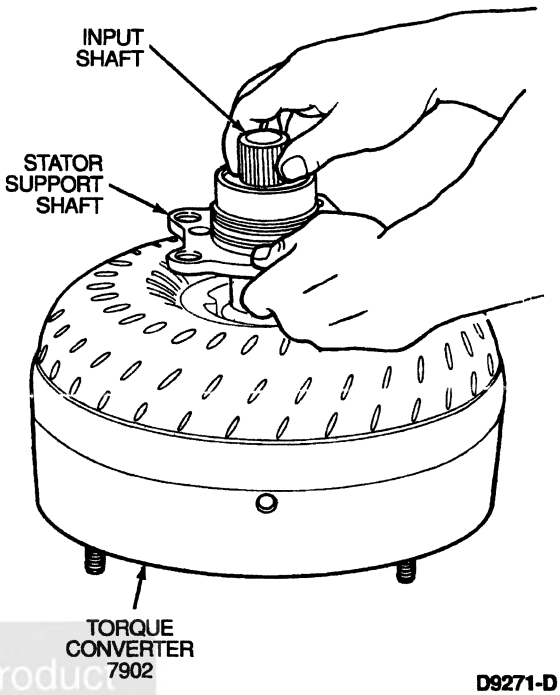

4 Hold the stator shaft stationary and attempt to rotate the turbine with the input shaft The turbine and lock-up clutch assemblies should rotate in both directions, not exceeding maximum torque of 9 5 N·m (7 lb-ft), without any signs of metallic interference or scraping noise

5 If interference exists, the stator front thrust washer may be worn, allowing the stator to hit the turbine In such cases, the torque converter must be replaced

Check the converter crankshaft pilot for nicks or damaged surfaces that can cause interference when installing the transmission to the engine Check the converter impeller hub for nicks or sharp edges that can damage the pump seal

ASSEMBLY

Transmission

SPECIAL SERVICE TOOL(S) REQUIRED

Description	Tool Number
Oil Filler Tube Replacer	T89T-70010-G
Clutch Spring Compressor	T65L-77515-A
Clutch Remover/Replacer	T89T-70010-E
Clutch Spring Fixture	T89T-70010-C
Aligning Pin	T89T-70010-B
Shift Lever Seal Replacer	T74P-77498-A

(Continued)

Official Licensed Product

ASSEMBLY (Continued)

SPECIAL SERVICE TOOL(S) REQUIRED (Cont'd)

Description	Tool Number
Transmission Range (TR) Sensor (MLPS) Alignment Tool	T92P-7010-AH
Extension Housing Seal Replacer	T61L-7657-B
Torque Converter Handles	T81P-7902-C

NOTE: Soak all friction clutch plates in clean Motorcraft MERCON® Multi-Purpose Automatic Transmission Fluid XT-2-QDX or MERCON® equivalent for 15 minutes.

NOTE: Lightly lubricate all O-ring seals before installing using Motorcraft MERCON® Multi-Purpose Automatic Transmission Fluid XT-2-QDX or MERCON® equivalent.

NOTE: Lightly lubricate all thrust washers with petroleum jelly to hold in place during assembly.

1. Mount transmission case (7005) in Rotunda Car / Truck Engine Repair Stand 014-00106 or equivalent.

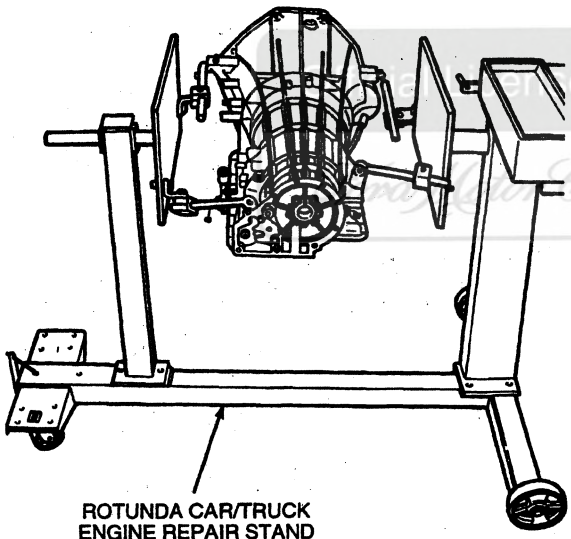

DD0801-A

2. If removed, install new short fluid inlet tube using Oil Filler Tube Replacer T89T-70010-G.

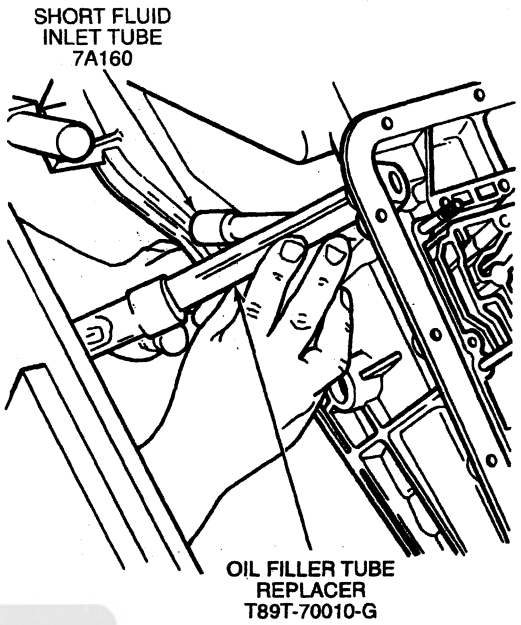

D10685-E

3. **CAUTION: While performing the following step, use care not to overtighten compressor tool or misalign the piston in its bore.**

   Install reverse clutch piston (7D402) using Clutch Spring Compressor T65L-77515-A. Remove tool after installing reverse clutch piston.

Front View

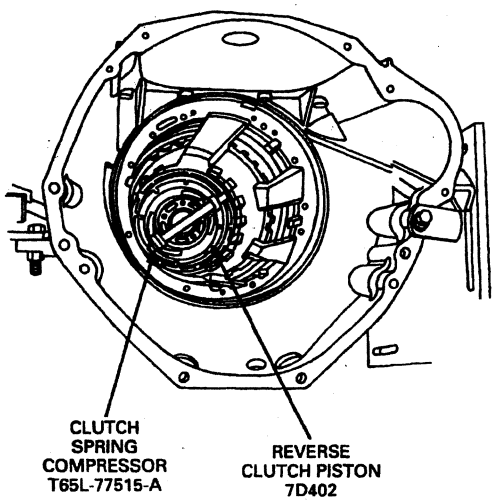

D9007-B

ASSEMBLY (Continued)

Rear View

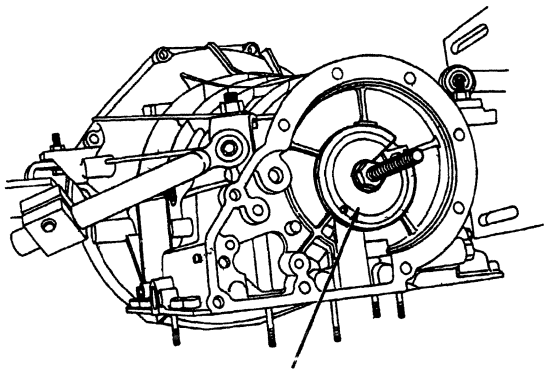

D9008-1A

4 Install reverse clutch return spring assembly and low / reverse one-way clutch inner race Inner race must be installed with lubrication hole in the 5 o'clock position

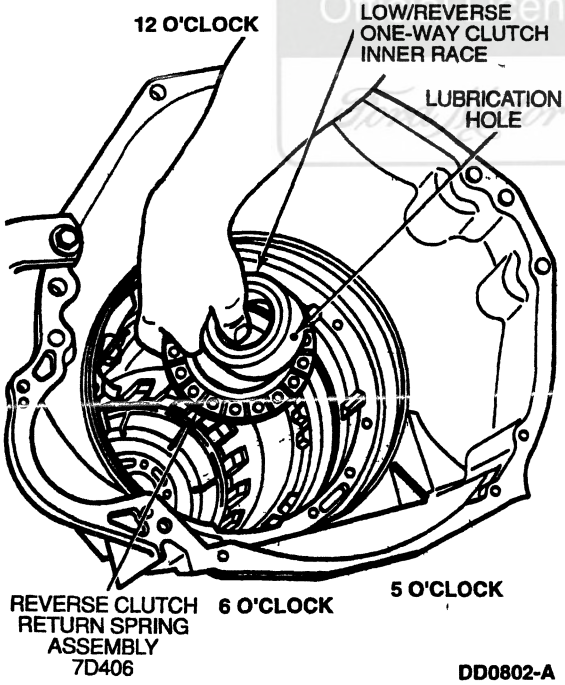

DD0802-A

5 Attach low / reverse one-way clutch inner race to case with five bolts using a 7 / 16 socket and alternately tighten to 24-34 N·m (18-25 lb-ft)

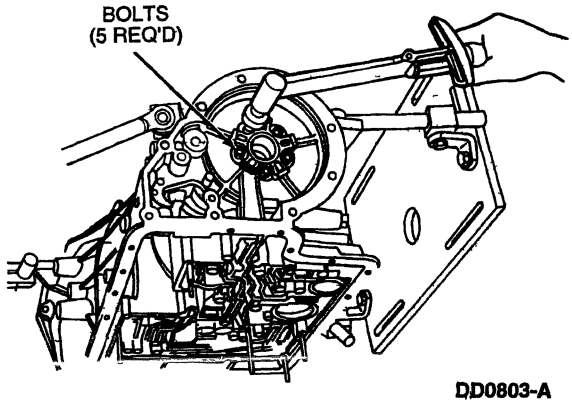

DD0803-A

6 **CAUTION. The number of clutch plates and pressure plates are model dependent**

NOTE Install reverse clutch pressure plate retaining ring with opening between the 12 o'clock and 3 o'clock positions

NOTE No stack-up clearance measurement required

Install cushion spring Install reverse clutch pack starting with an (external spline) steel plate Alternate with (internal splined) friction plates Install reverse clutch pressure plate and reverse clutch pressure plate retaining ring

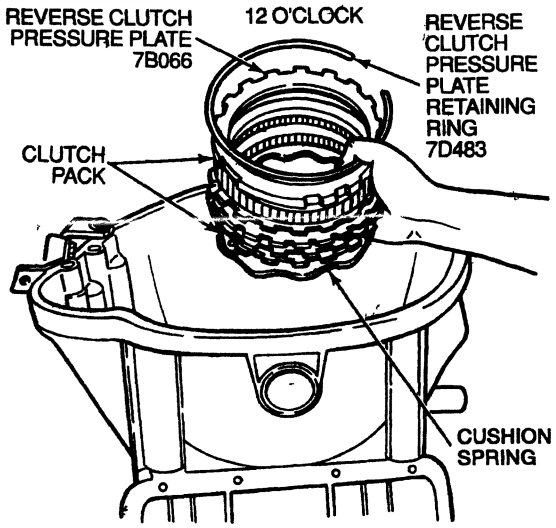

D11848-D

ASSEMBLY (Continued)

7. NOTE: Make sure No. 13 parking gear thrust washer is properly seated against tab on case.

   Lubricate steel side of the No. 13 parking gear thrust washer with petroleum jelly and place on rear of case so that bronze side is facing outward.

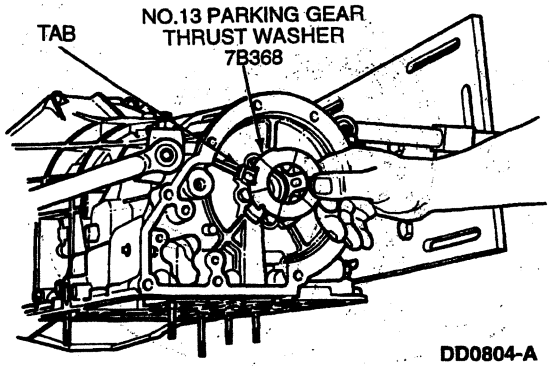

DD0804-A

8. Slide park gear (7A233) onto output shaft (7060) with thrust surface forward. Install output shaft.

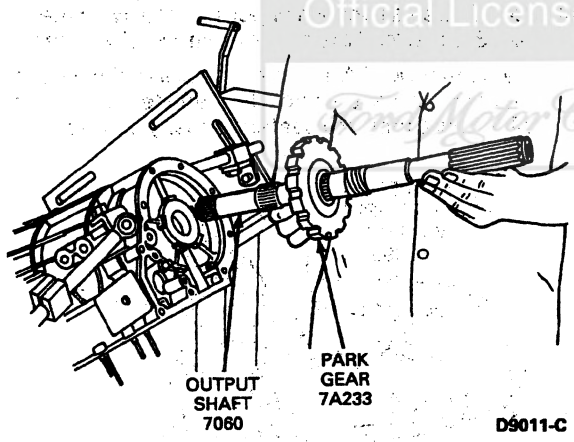

D9011-C

9. NOTE: When the reverse clutch and low one-way clutch are installed, the reverse clutch should rotate clockwise. The one-way clutch will hold and not let the clutch hub rotate counterclockwise.

   Install reverse clutch hub and low one-way clutch assembly by pressing hub inward and rotating clockwise over the inner race to fully seat.

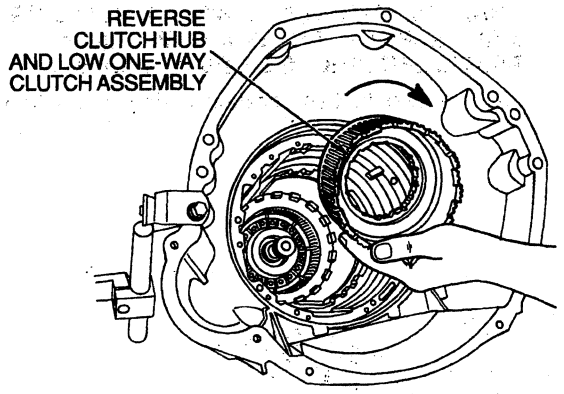

D8988-B

10. NOTE: Lightly lubricate thrust bearing with petroleum jelly to hold it in place during assembly.

    Place the No. 12 thrust bearing on the rear surface of the hub assembly. Place the output shaft ring gear assembly into the case.

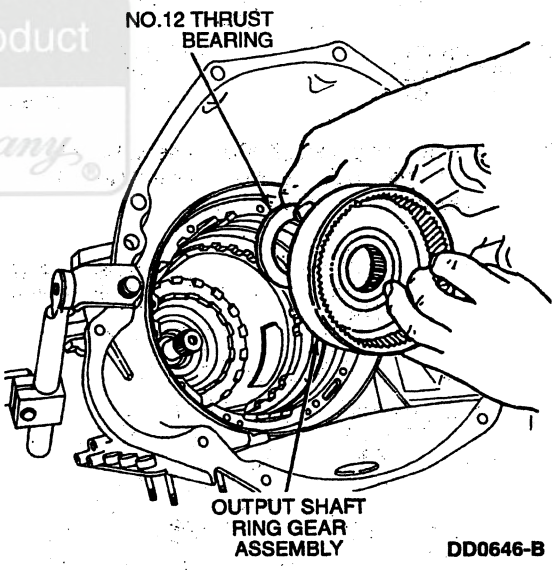

DD0646-B

Official Licensed Product
Ford Motor Company

ASSEMBLY (Continued)

11 **WARNING. DO NOT OVEREXTEND OUTPUT SHAFT RETAINING RING WHEN INSTALLING MAKE SURE OUTPUT SHAFT RETAINING RING IS SECURELY SEATED IN GROOVE**

Install **new** output shaft retaining ring onto output shaft

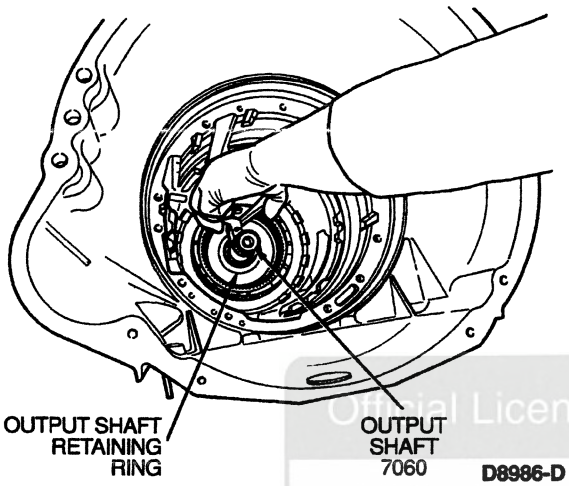

D8986-D

12 Install reverse planet (7D006) assembly into reverse clutch hub with No 10B and No 11 reverse planet thrust washers

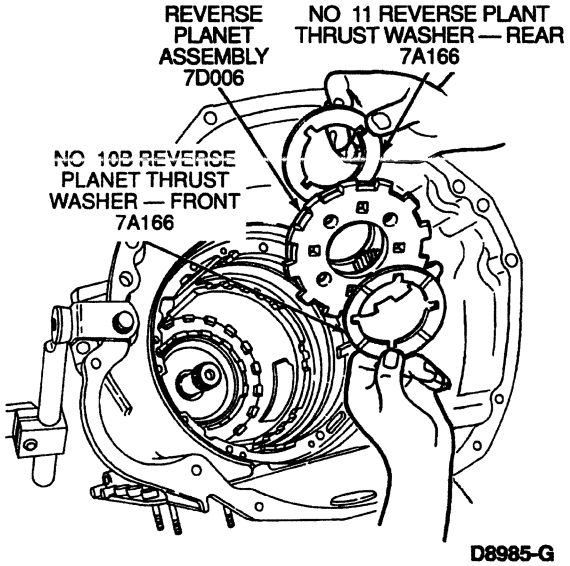

D8985-G

13 Install reverse planet retaining ring into reverse clutch hub Verify retaining ring is fully seated

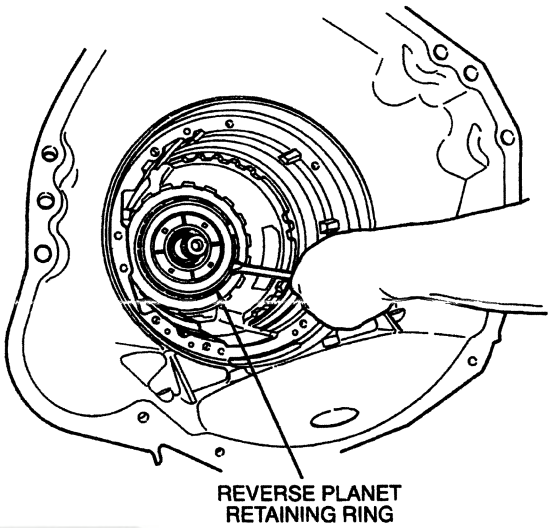

D8984-C

14 NOTE Use a light film of petroleum jelly on the No 8A intermediate brake drum thrust washer

Verify that No 8A intermediate brake drum thrust washer is installed onto intermediate brake drum Make sure tabs are seated properly into slots

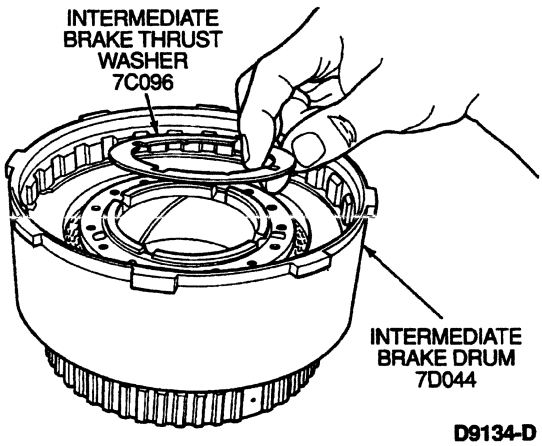

D9134-D

Official Licensed Product Ford Motor Company

ASSEMBLY (Continued)

15. Verify that the No. 8B forward clutch needle bearing is installed. If not, apply a light film of petroleum jelly to forward clutch needle bearing cylinder assembly and install into front end of forward clutch with the large O.D. radius facing inward.

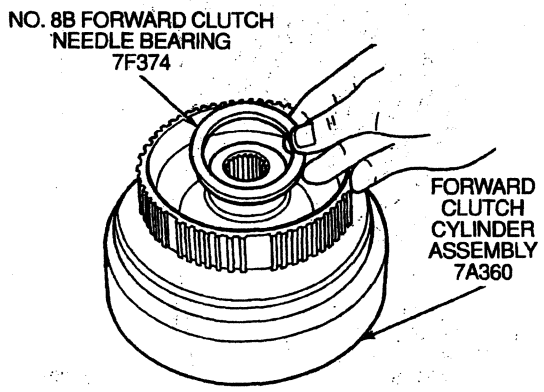

D9275-D

16. Install forward clutch cylinder assembly onto intermediate brake drum by rotating until fully seated.

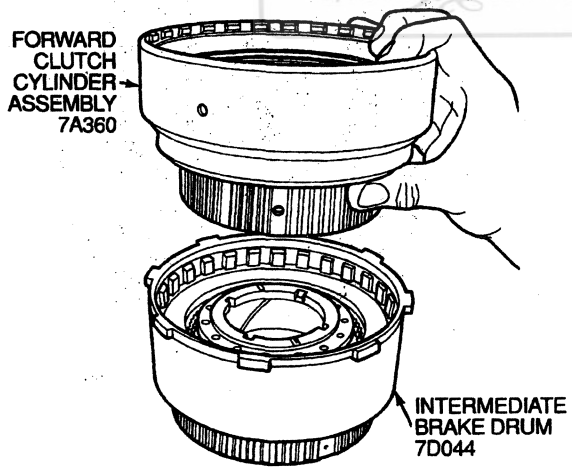

D9135-C

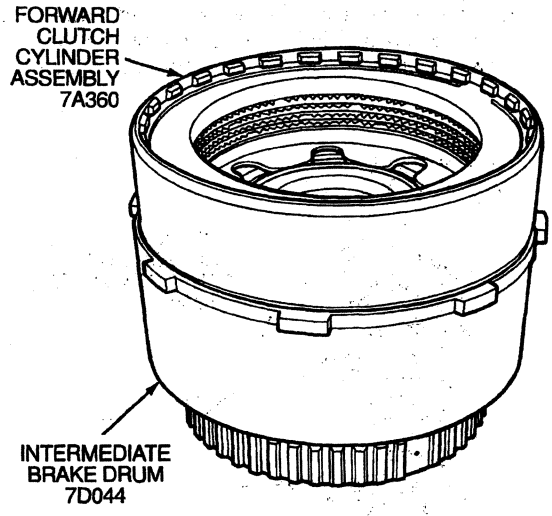

D9136-C

17. NOTE: Use a light film of petroleum jelly on the No. 9A forward clutch thrust bearing. Install with black side facing up.

    Verify that the No. 9A forward clutch thrust bearing is installed into the forward clutch.

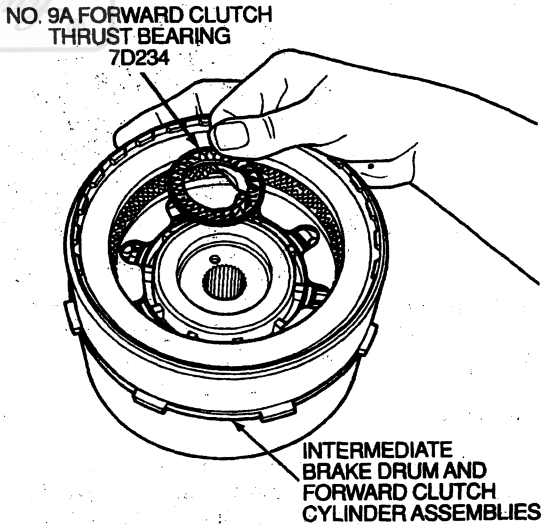

DD0647-A

Licensed Product
Ford Motor Company

ASSEMBLY (Continued)

18. Apply a light film of petroleum jelly to No. 8C forward clutch hub thrust washer and place onto forward hub and ring gear assembly. Place forward hub and ring gear assembly into clutch drum.

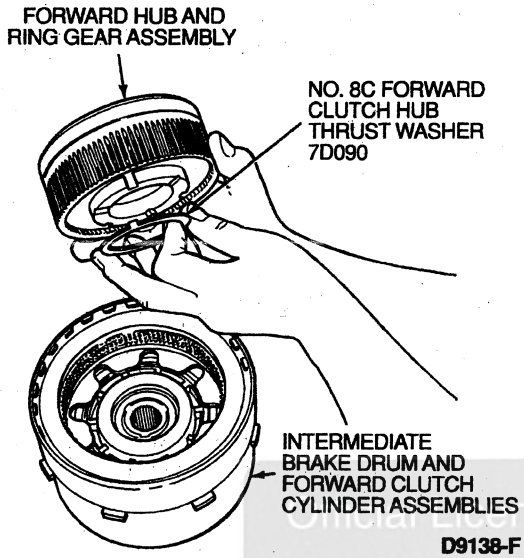

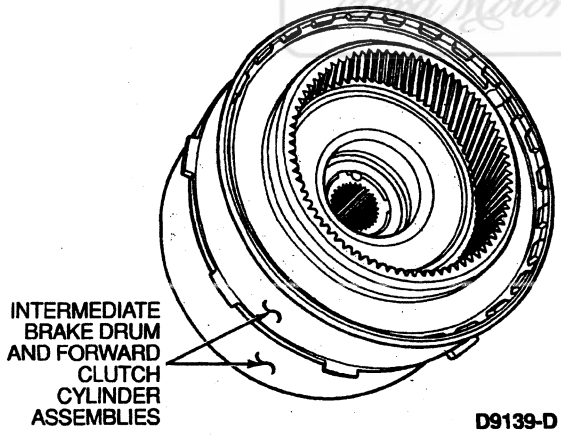

19. Apply a light film of petroleum jelly to No. 10A forward planet assembly thrust bearing and place onto forward planet assembly. Place forward planet assembly into forward hub and ring gear assembly.

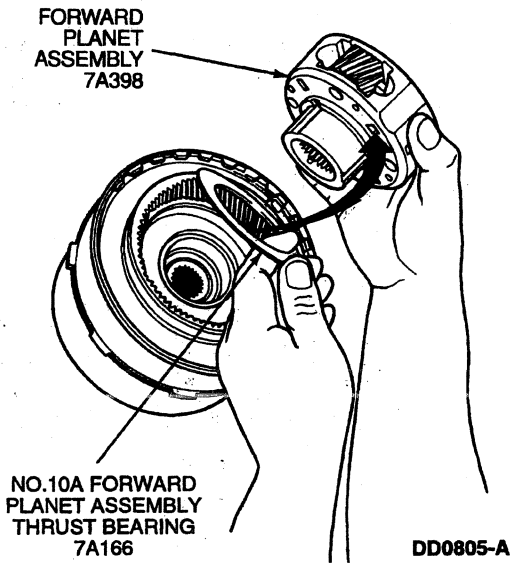

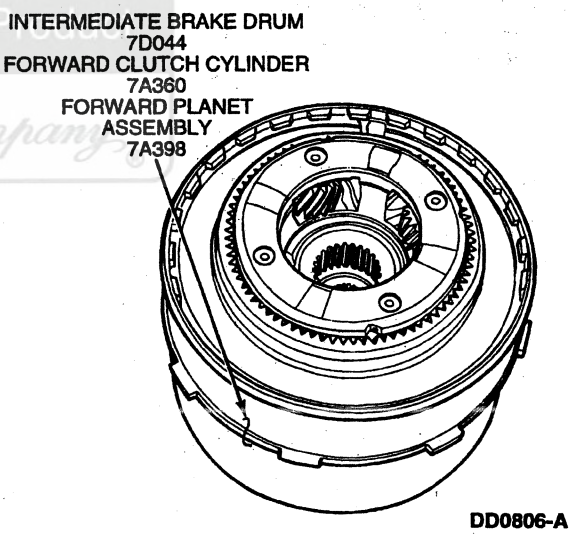

Official Licensed Product
Ford Motor Company

ASSEMBLY (Continued)

20. NOTE: Apply a light film of petroleum jelly to No. 9B forward clutch thrust bearing to hold in place. Install with large O.D. radius facing inward.

    Verify No. 9B forward clutch thrust bearing is installed into forward planet assembly.

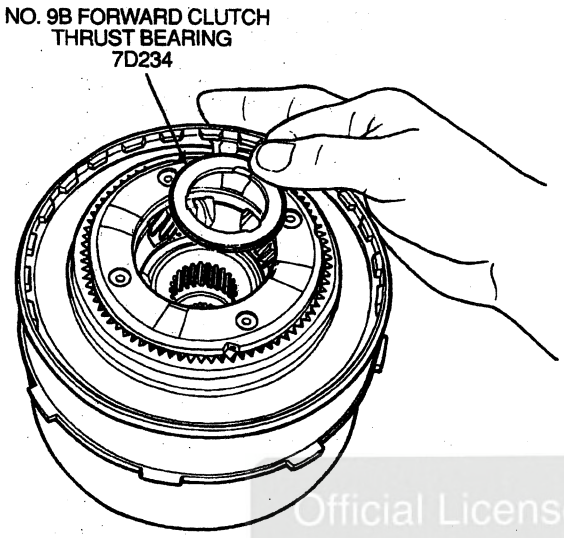

D9142-D

21. Align input shell notches with intermediate brake drum lugs.

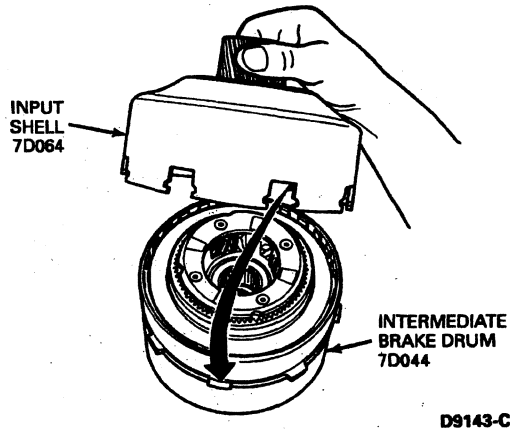

D9143-C

22. Install input shell onto assembly and rotate until fully seated.

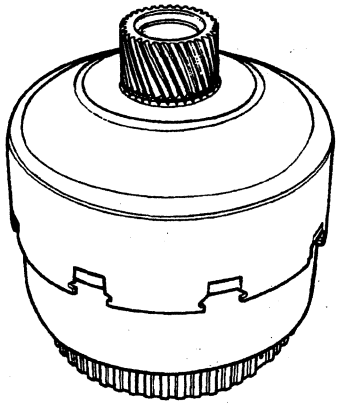

D9144-B

23. Install Clutch Remover / Replacer T89T-70010-E.

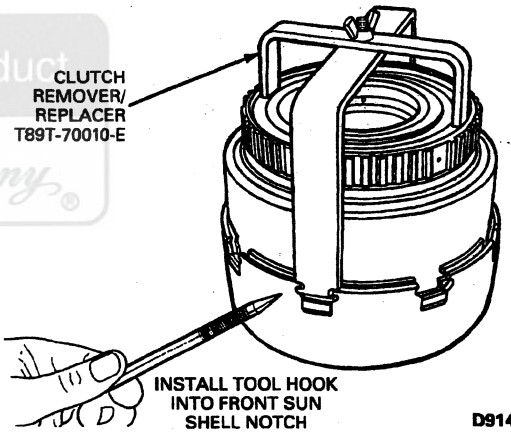

D9145-C

Official Licensed Product
Ford Motor Company

ASSEMBLY (Continued)

24 With Clutch Remover / Replacer T89T-70010-E attached, lower entire assembly (direct clutch, forward clutch assembly and input shell assembly) into case

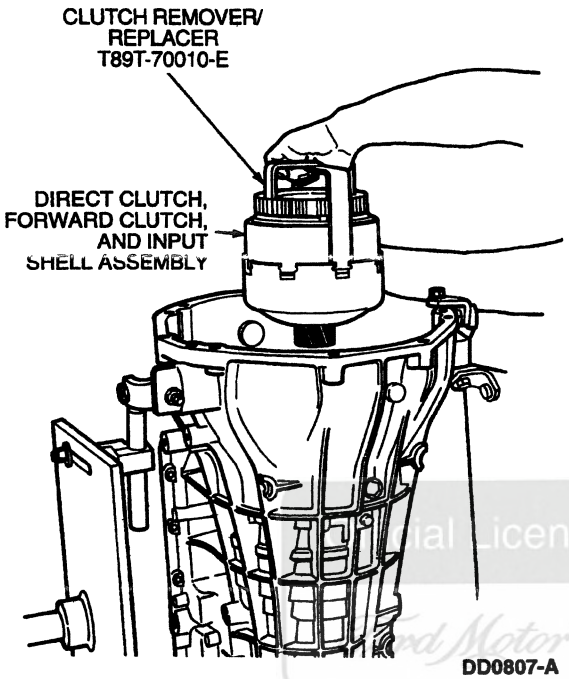

DD0807-A

25 Remove service tool

26 Install intermediate band so that one ear is resting on the anchor pin

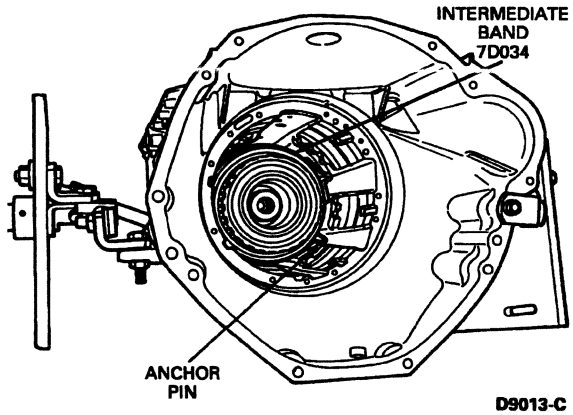

D9013-C

27 NOTE Prior to installation, lightly lubricate piston seal with clean transmission fluid

Gently press intermediate band servo assembly piston into case bore

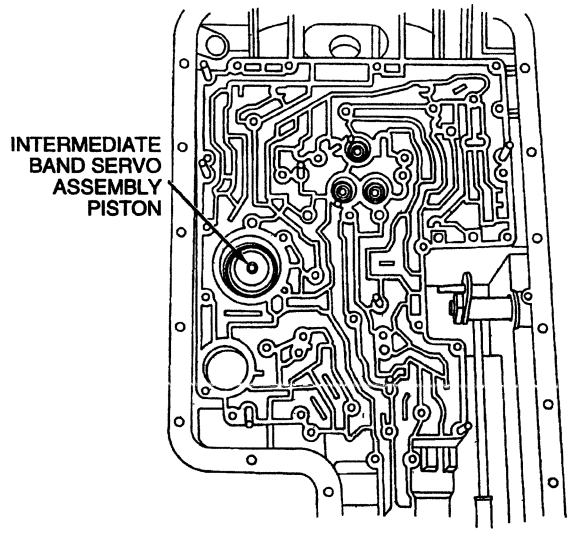

DD0232-A

28 **CAUTION The number of plates are model dependent**

NOTE Install front intermediate clutch pressure apply plate with blank area (no teeth) at 6 and 12 o'clock positions

Install intermediate clutch rear pressure plate on bottom Install intermediate clutch pack starting with internal spline plate and alternate with external spline plates Install front intermediate clutch pressure apply plate on top

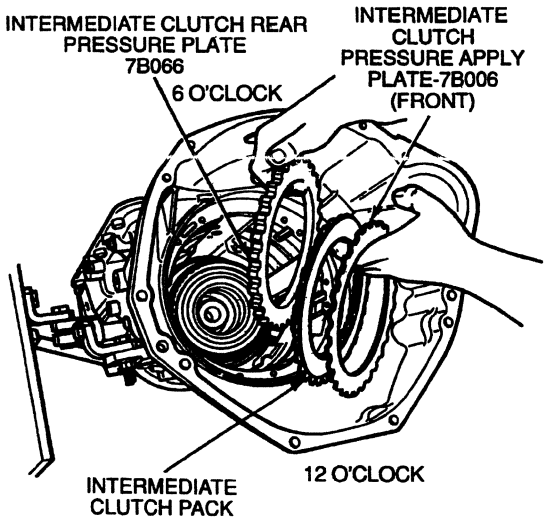

DD0770-A

ASSEMBLY (Continued)

29. NOTE: The following stack-up check measurement indicates not only the amount of space existing between the center support assembly and the intermediate brake drum; it also will indicate if the unit has been properly built to this point.

    Lubricate the direct clutch cast iron seal rings on center support assembly with petroleum jelly.

STACK-UP CHECK

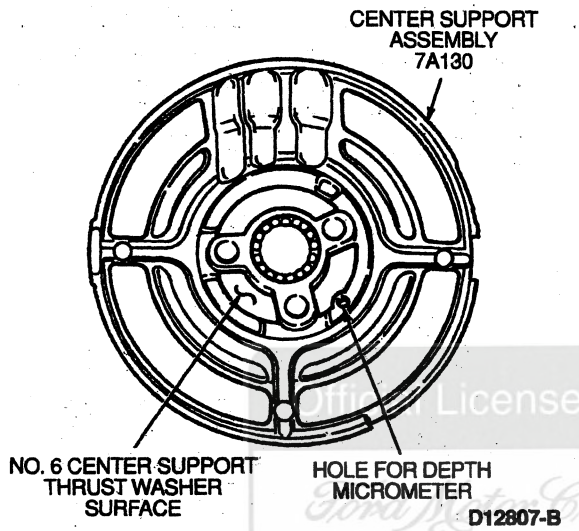

30. Determine center support assembly thickness by placing Depth Micrometer D80P-4201-A or equivalent over the hole in the center support assembly. Extend micrometer probe until flush with the No. 6 center support thrust washer (7L326) surface on the opposite side of center support assembly. A thrust washer held against the center support assembly as shown will help to determine when the probe is flush. Record this as Reading A.

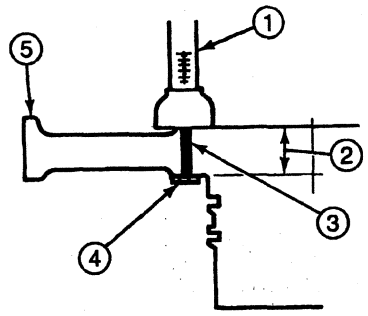

STACK-UP CHECK READING A D12808-C

Item	Part Number	Description
1	—	Depth Micrometer D80P-4201-A
2	—	Reading A
3	—	Depth Micrometer Probe Flush with Thrust Washer Surface
4	—	Thrust Washer on Center Support
5	7A130	Center Support Assy

31. Install No. 6 center support thrust washer into intermediate brake drum. Make sure it is fully seated.

Official Licensed Product Ford Motor Company

ASSEMBLY (Continued)

32 **CAUTION Do not misalign center support in the case bore This can damage the case bore**

Install center support assembly with feed holes in 6 o'clock position Install the two **new** feedbolts **Do not** tighten at this time

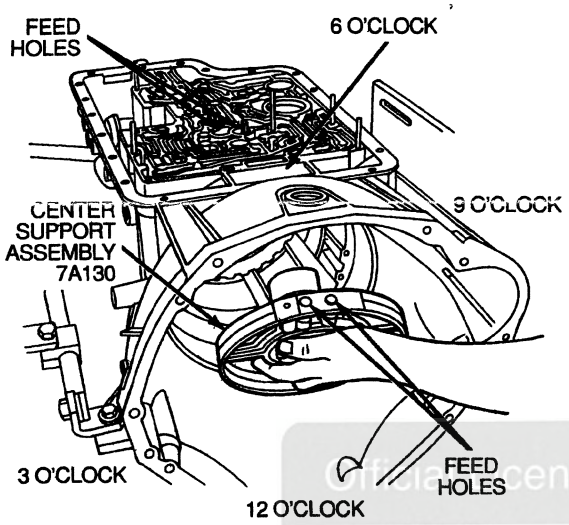

D9015-C

33 Place depth micrometer over hole in center support assembly and extend micrometer probe until it contacts the thrust washer This is Reading B

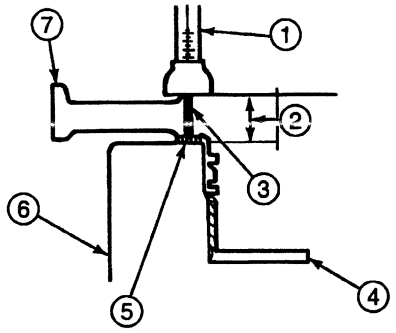

STACK-UP CHECK READING B

D12809-B

Item	Part Number	Description
1	—	Depth Micrometer D80P-4201-A
2	—	Reading B

(Continued)

Item	Part Number	Description
3	—	Depth Micrometer Probe Contacting Thrust Washer
4	7F374	Forward Clutch Needle Bearing (No 8B)
5	7L326	Center Support Thrust Washer (No 6)
6	7D044	Intermediate Brake Drum
7	7A130	Center Support Assy

34 Subtract reading A from reading B Record this as reading C Reading C must be within specification 2 06-0 81 mm (0 081-0 032 inch) If final dimension is outside specified limits, this indicates improper assembly

STACK-UP CHECK READING C

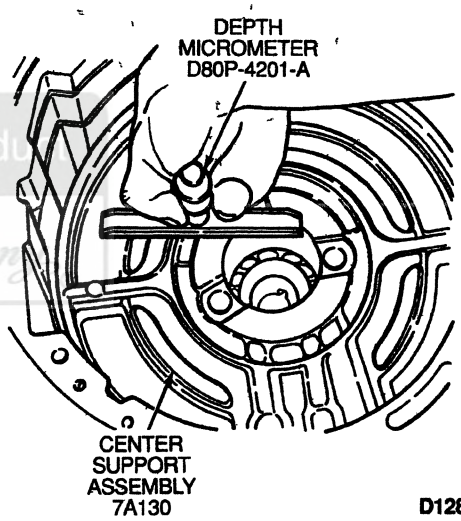

D12810-B

Official Licensed Product
Ford Motor Company

ASSEMBLY (Continued)

35 NOTE Locate one spring leg pointing toward the 6 o'clock position of the transmission (7003)

Install intermediate clutch return spring with dished surface inward

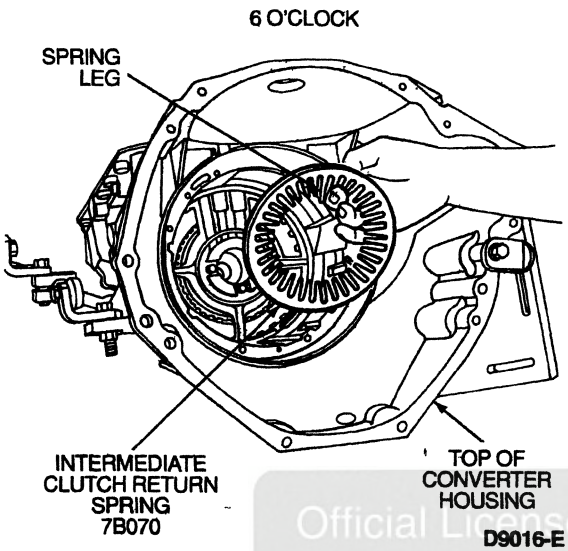

36 **CAUTION: Do not misalign intermediate / overdrive cylinder assembly when installing This can damage the case bore**

Install intermediate / overdrive cylinder assembly into casewith feed hole in 6 o'clock position aligning with feed hole in case

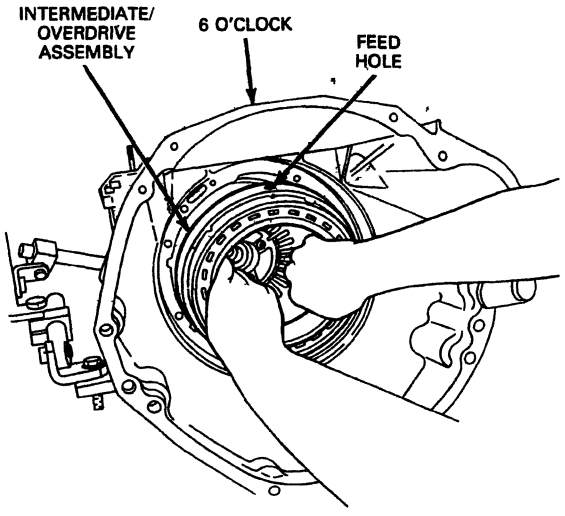

37 Position intermediate / overdrive cylinder retaining ring over intermediate / overdrive cylinder assembly so that snap ring opening is at bottom (6 o'clock position) of case for proper fluid drainback

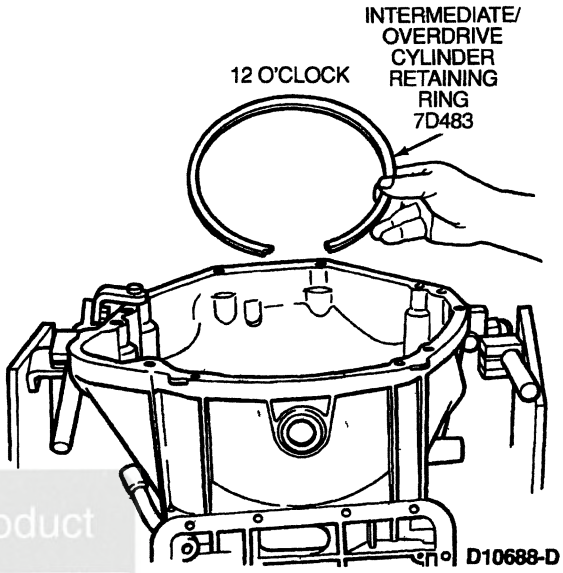

Official Licensed Product

ASSEMBLY (Continued)

38. NOTE: No stack-up clearance measurement required.

    Install Clutch Spring Fixture T89T-70010-C onto intermediate / overdrive cylinder assembly. Using two bolts, attach the tool to the pump face of case as illustrated. Tighten center bolt to 7 N·m (65 lb-in). Seat intermediate / overdrive cylinder retaining snap ring into case ring groove. Install **new** intermediate / overdrive cylinder feedbolt. (**Do not** tighten at this time.)

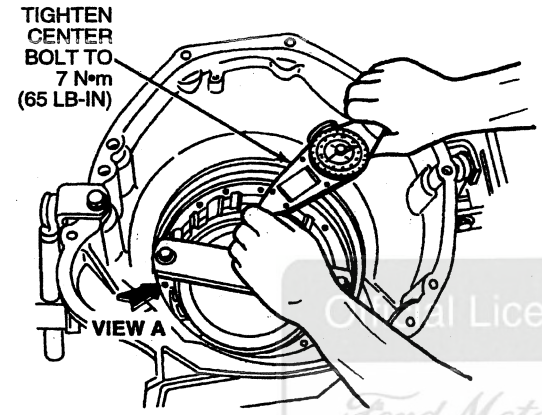

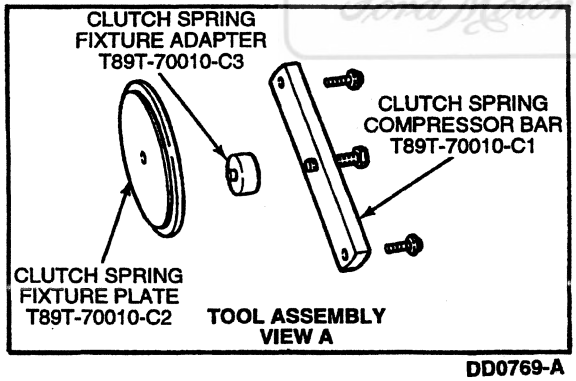

DD0769-A

39. Remove clutch spring fixture assembly.

40. **CAUTION: The input shaft (7017) and overdrive planet assembly are serviced as mating components.**

    Verify that the No. 5 overdrive center shaft thrust bearing assembly is on rear face of overdrive center shaft (7A658). Install overdrive center shaft, overdrive ring gear, overdrive planet assembly and coast clutch cylinder as an assembly.

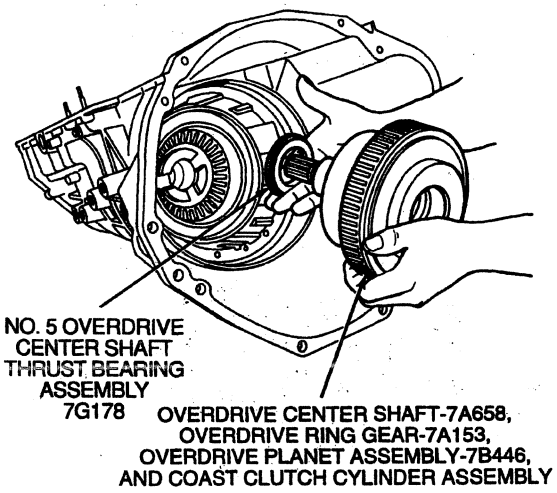

DD0808-A

41. NOTE: Number of plates in clutch pack is model-dependent.

    Install overdrive clutch starting with steel plate alternating with friction plates. Install overdrive clutch pressure plate with dot facing outward and at the 12 o'clock position. Install overdrive clutch pressure plate retainer snap ring with opening at bottom of case (6 o'clock).

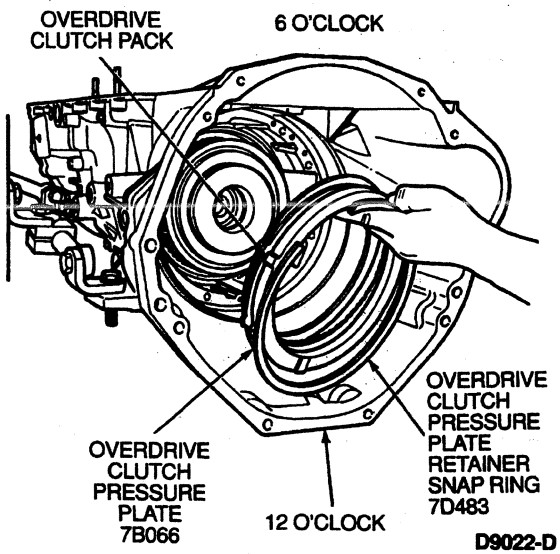

D9022-D

ASSEMBLY (Continued)

42. Check stack-up clearance in three positions 120 degrees apart using a feeler gauge. If not within 1.33-0.68 mm (0.052-0.027 inch) for 2 plate applications, or 1.473-0.812 mm (0.058-0.032 inch) for 3 plate applications, install correct selective retaining ring and recheck clearance. Refer to the Specifications portion of this section for selective snap ring thicknesses and part numbers.

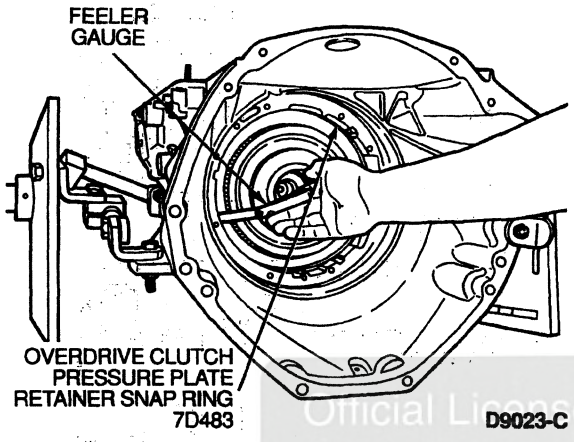

43. NOTE: Lightly lubricate gasket with petroleum jelly to hold it in place during assembly.

    Align holes and install new pump gasket into case.

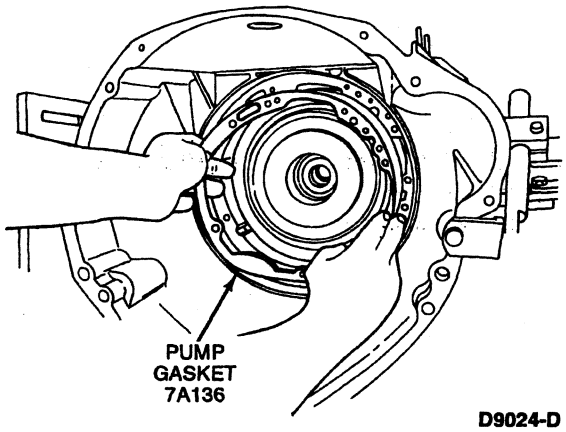

44. **CAUTION: The input shaft and overdrive planet assembly are serviced as mating components.**

    Install input shaft (long splined end first) and thread Aligning Pin T89T-70010-B into case.

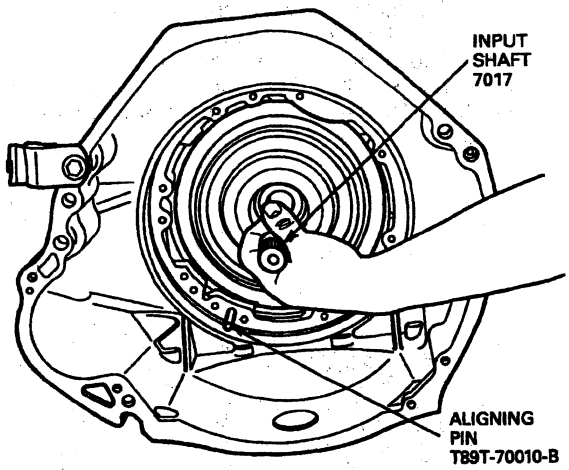

45. Using petroleum jelly to hold in place, make sure that No. 1 pump thrust washer and No. 2A overdrive sun gear thrust bearing are in place before installing pump.

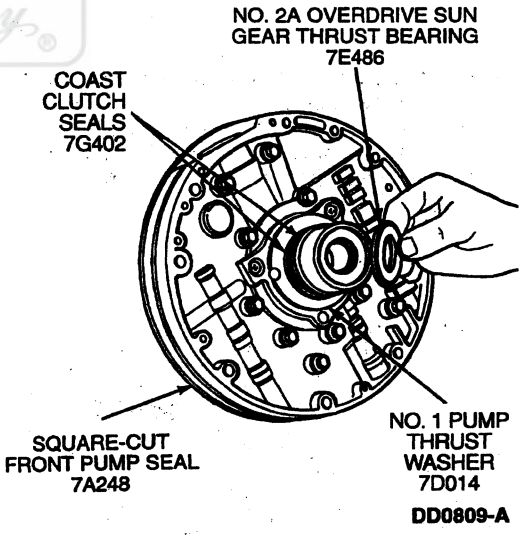

Official Licensed Product Motorcraft Company

ASSEMBLY (Continued)

46. **CAUTION: Tighten pump bolts alternately to avoid possible damage.**

    Install the front pump assembly into the case. Orient the filter inlet tube bore toward the 6 o'clock position. Fully seat the front pump assembly using **hand pressure only. Do not use bolts to draw front pump assembly into the case.**

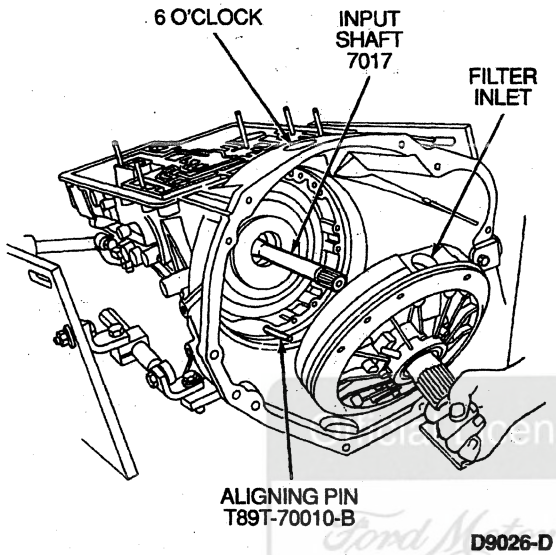

D9026-D

47. Remove old rubber coated washers from the nine pump-to-case bolts. Install nine **new** pump bolt washers. Remove Aligning Pin T89T-70010-B. Install nine pump bolts using a 10 mm socket. Tighten bolts alternately to 24-31 N·m (18-23 lb-ft).

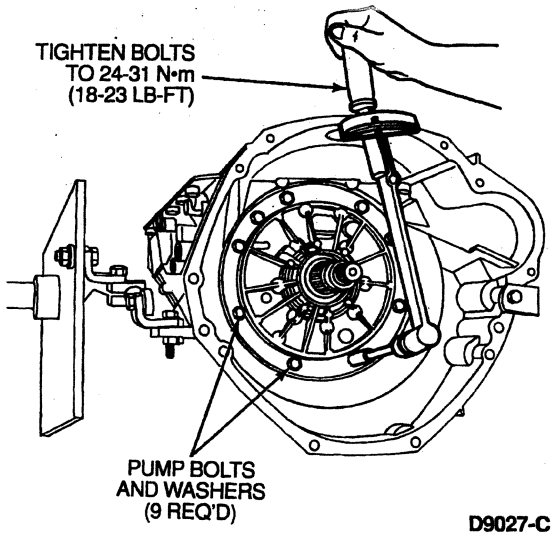

D9027-C

48. If replaced, verify the correct input shaft and overdrive planet assembly were used. Measure as shown below. The input shaft must extend 38 mm (1.5 inch) past the end of the pump stator.

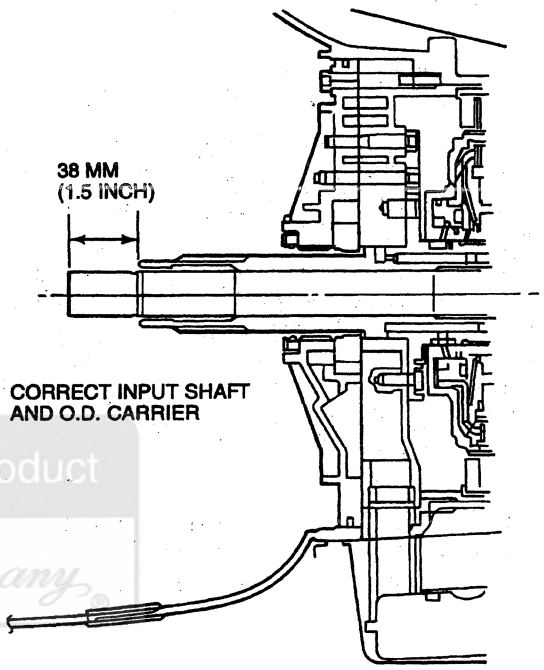

D16549-A

49. **CAUTION: Remove input shaft prior to rotating transmission.**

    Remove input shaft.

Licensed Product
Ford Motor Company

ASSEMBLY (Continued)

50. Install manual control lever seal using Shift Lever Seal Replacer T74P-77498-A.

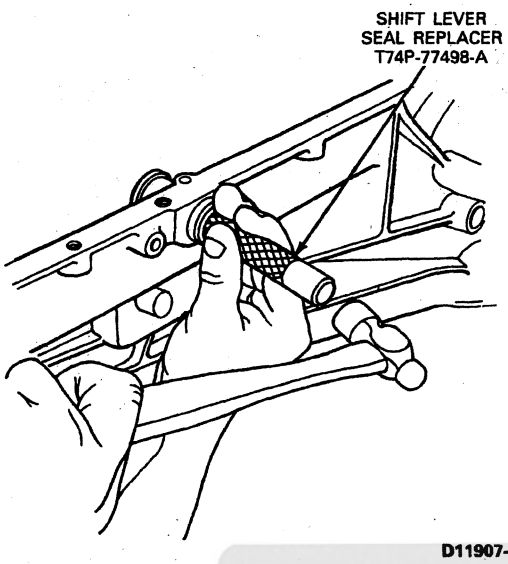

D11907-B

51. Install manual control lever shaft (7C493).
52. Install transmission range (TR) sensor with two bolts and washers. **Do not** tighten bolts at this time.
53. Insert manual control valve detent lever spring (7A261) and 8 mm bolt. Tighten to 9-11 N·m (80-100 lb-in).
54. Install manual lever shaft retaining pin (7B210) below the case surface.
55. NOTE: Inner manual valve detent lever (7A115) must be seated on flats of manual control lever shaft, and parking pawl actuating rod must be through guide plate.

    Install inner manual valve detent lever, parking pawl actuating rod and nut.

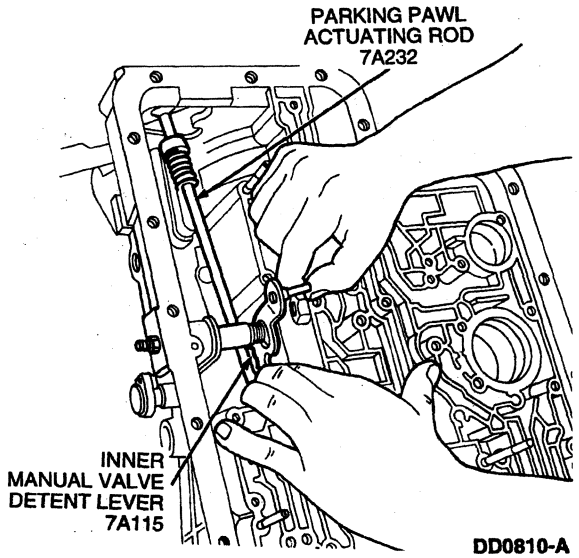

DD0810-A

56. NOTE: Manual control valve detent lever spring must be on inner manual valve detent lever and detent lever pin must align with manual shift valve.

    Tighten inner manual valve detent lever nut using a 21 mm crowfoot while holding manual control lever shaft with crescent wrench. Tighten nut to 41-54 N·m (30-40 lb-ft).

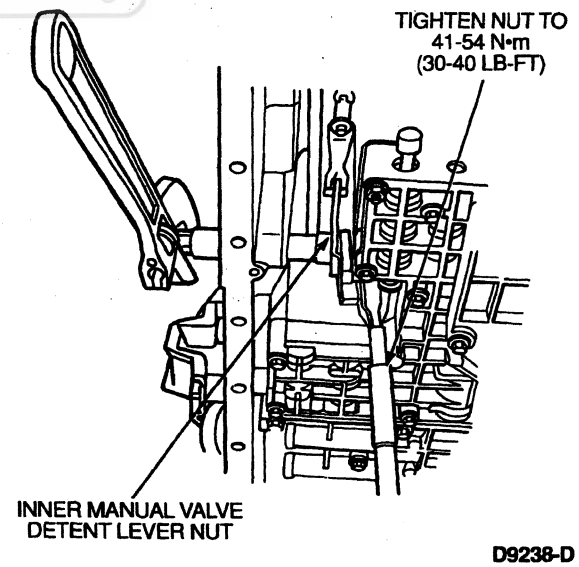

D9238-D

57. Shift inner manual valve detent lever to all detent positions to check proper engagement of all positions and parking mechanism.
58. Align transmission range (TR) sensor with the transmission in neutral gear position using Transmission Range (TR) sensor (MLPS) Alignment Tool T92P-7010-AH.
59. Using an 8 mm socket, tighten bolts to 8-10 N·m (77-85 lb-in).

Ford Motor Company

ASSEMBLY (Continued)

60. NOTE: The outer manual control lever (7A256) must be seated on the flats of the manual control lever shaft.

    Install the outer manual control lever onto the manual control lever shaft. The outer manual control lever must be up and the pin facing away from the transmission.

61. **CAUTION: A new outer manual control lever shaft nut must be used to properly secure outer manual control lever to manual control lever shaft.**

    Install a new outer manual control lever shaft nut using a 15 mm socket while holding the outer manual control lever with a crescent wrench. Tighten the nut to 35-47 N·m (26-35 lb-ft) (cable system only).

62. NOTE: Parking pawl return spring (7D070) end rests on inside surface of case.

    Install parking pawl (7A441), parking pawl shaft (7D071) and parking pawl return spring on rear face.

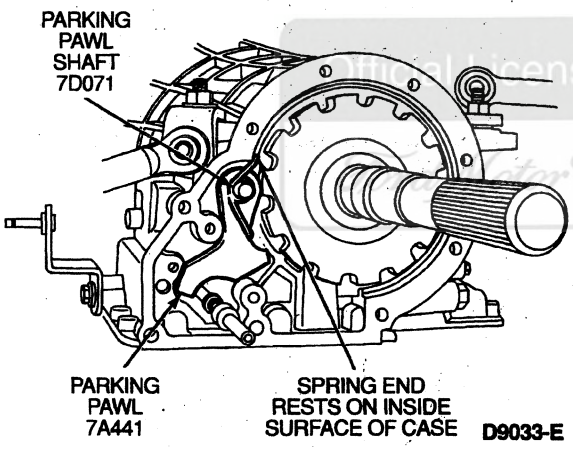

D9033-E

63. If removed, install parking pawl abutment with **new** Torx® head screw (T40 bit) and tighten to 22-27 N·m (16-20 lb-ft).

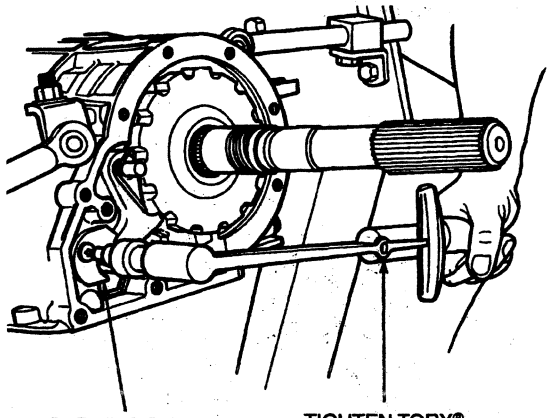

D9034-F

64. NOTE: Make sure parking guide support plate dimple is facing inward and parking pawl actuating rod is in parking rod support plate slot.

    Attach two parking rod guide plate bolts and washers using a 13 mm socket. Tighten to 22-27 N·m (16-20 lb-ft).

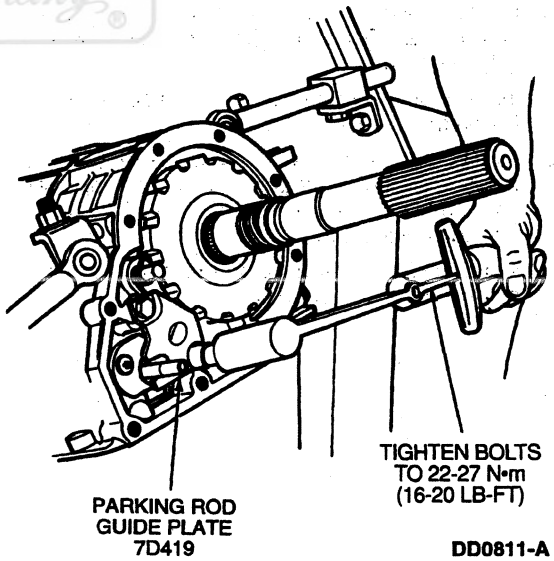

DD0811-A

ASSEMBLY (Continued)

65. NOTE: Lightly lubricate gasket to hold it in place during assembly.

    Place **new** extension housing gasket on extension housing (7A039).

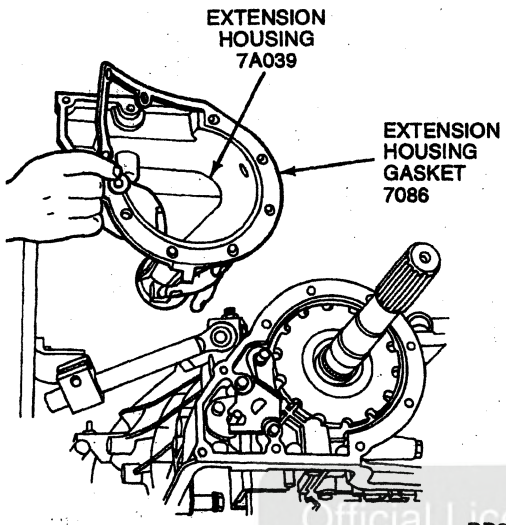

DD0648-A

66. NOTE: The two bottom extension housing bolts are slightly shorter on 4x2 vehicles and slightly longer on 4x4 vehicles.

    Install extension housing and wiring bracket on rear of case (at approximately the 10 and 11 o'clock positions). Install nine bolts using 13 mm socket. Tighten bolts to 41-54 N·m (30-40 lb-ft).

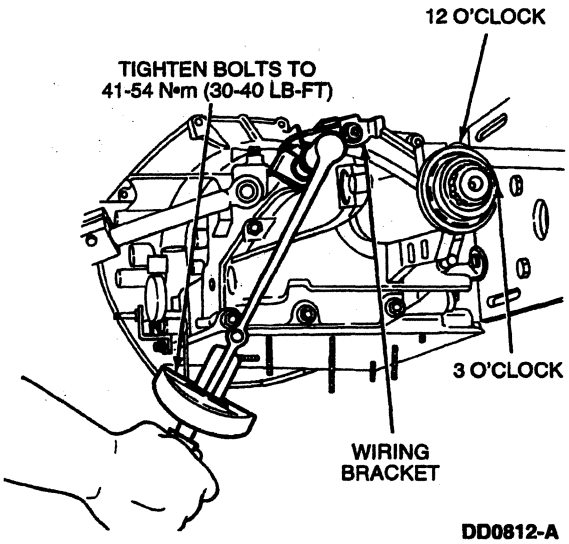

DD0812-A

67. Install extension housing seal, using Extension Housing Seal Replacer T61L-7657-B.

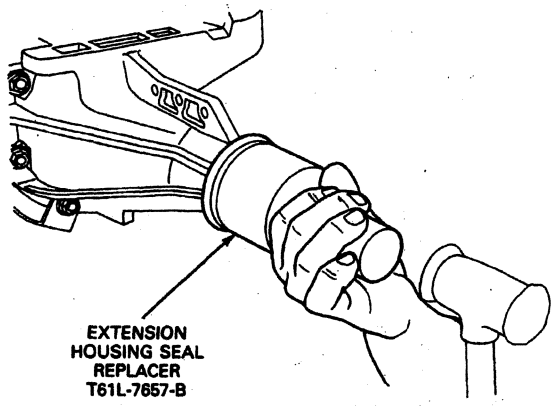

D9130-1A

68. Tighten intermediate/overdrive cylinder and center support assembly feedbolts using 13 mm socket. **Tighten the front feedbolt to 8-14 N·m (6-10 lb-ft). Tighten both rear feedbolts to 11-16 N·m (8-12 lb-ft).**

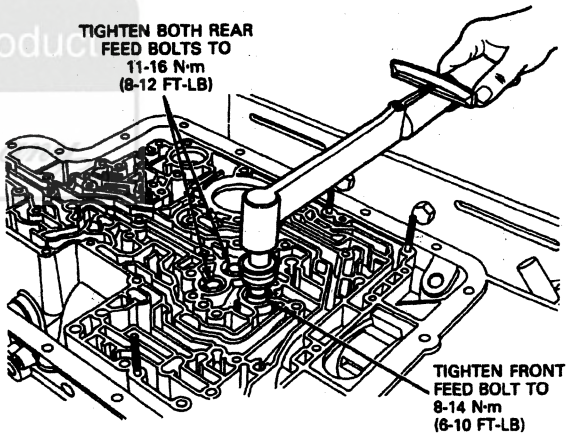

D9020-1A

69. NOTE: The steel EPC check ball has a 0.25-inch diameter steel ball that is smaller than the other check balls.

    Install steel EPC check ball and spring assembly.

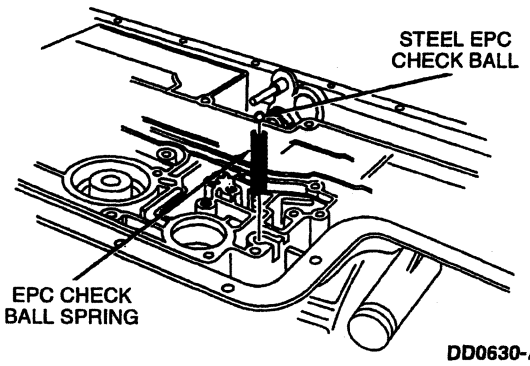

DD0630-A

Official Licensed Product Ford Motor Company

ASSEMBLY (Continued)

70 **CAUTION Use care not to damage rubber check balls**

Install eight rubber check balls Refer to the following illustration for check ball location

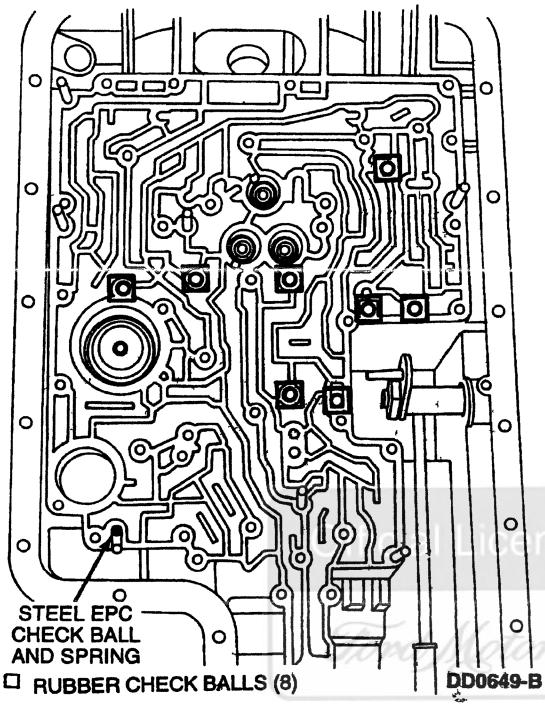

71 NOTE Refer to parts catalog for correct gasket use

Install new valve body separator plate gasket

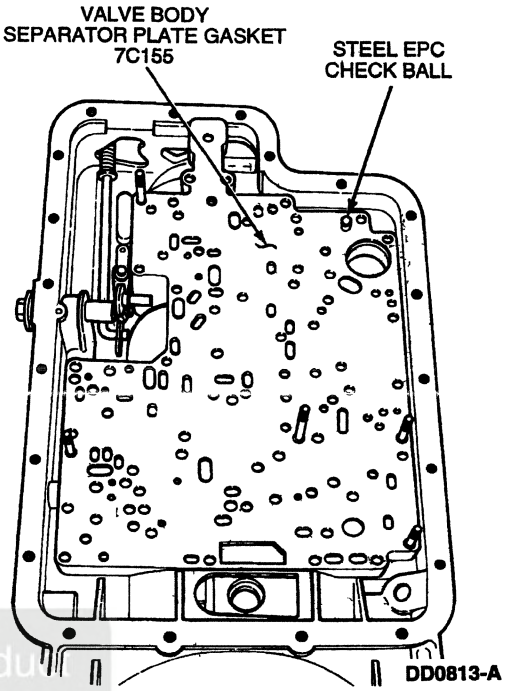

72 NOTE Check placement of steel EPC check ball

Install valve body separator plate (7A008)

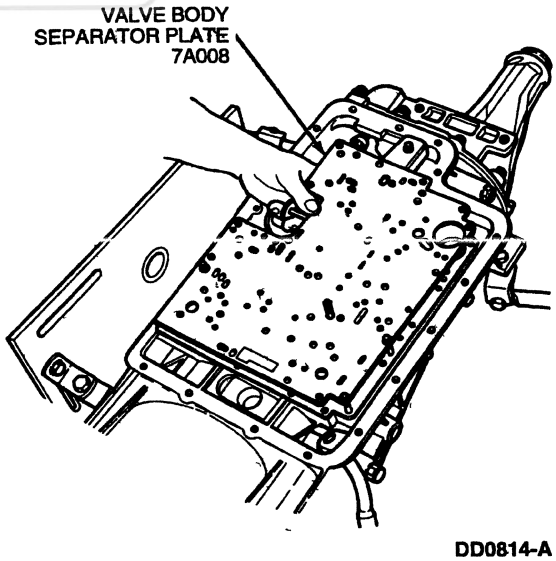

Ford Motor Company Licensed Product

ASSEMBLY (Continued)

73. Install separator plate reinforcing plate with the stamped word UP visible. Install three bolts using an 8 mm socket. Tighten to 9-11 N·m (80-100 lb-in).

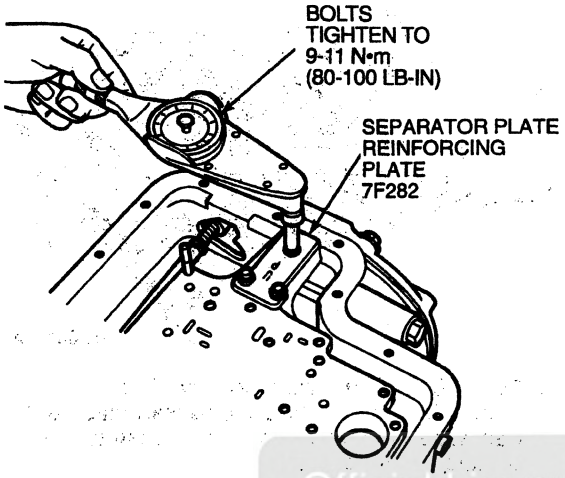

DD0815-A

74. NOTE: Refer to master parts catalog for correct gasket usage.

Install new valve body separator plate to case gasket.

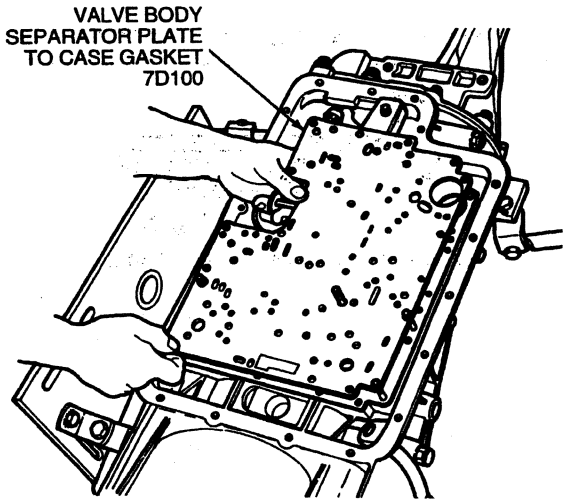

DD0816-A

75. Install solenoid screen assembly into separator plate by pushing in and rotating to lock.

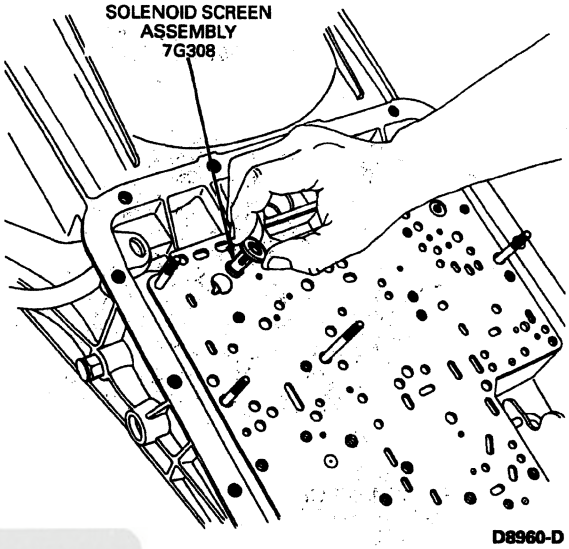

D8960-D

76. Install accumulator body assembly over studs. Install two nuts and 11 bolts and finger-tighten.

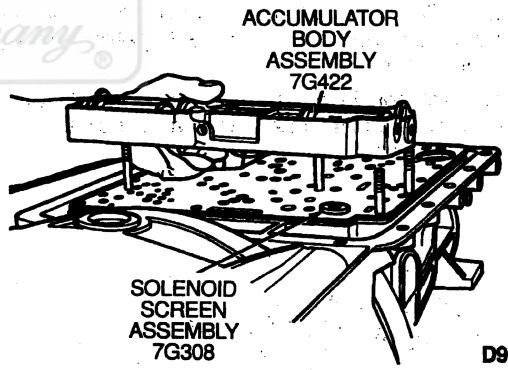

D9045-C

Official Licensed Product Ford Motor Company

ASSEMBLY (Continued)

77. Lower main control valve body (7A100) over studs. Align manual shift valve with inner manual valve detent lever.

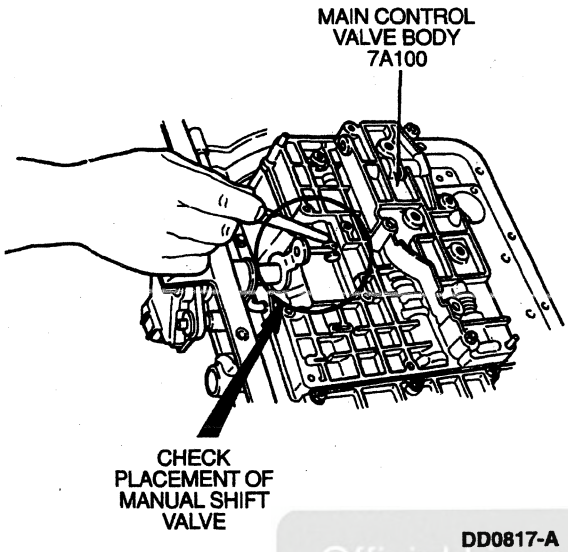

DD0817-A

78. Install main control valve body. Install two nuts and finger-tighten.
79. NOTE: Prior to installing solenoid body assembly, coat the case connector bore with petroleum jelly or equivalent.

    Install solenoid body assembly over stud. Install nine Torx® bolts using a T30 bit and one nut. Finger-tighten.

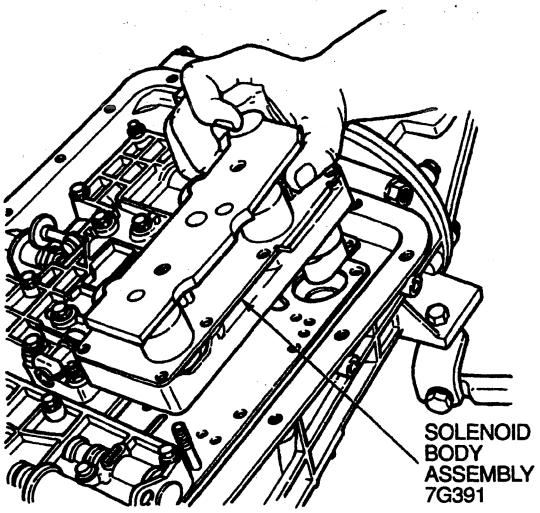

D9049-B

80. Tighten all accumulator body, upper and lower control body and solenoid body nuts and bolts to 9-11 N•m (80-100 lb-in).

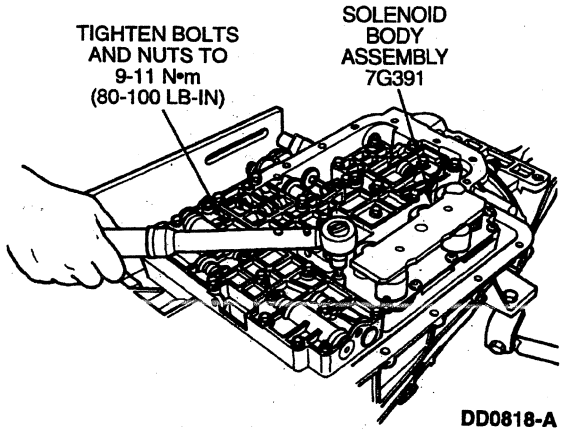

DD0818-A

81. **CAUTION: Do not mix 4x4 and 4x2 transmission fluid filters and transmission pan assembly components. Transmission damage can result.**

    Select the appropriate style filter assembly and transmission pan for either 4x2 or 4x4 vehicles.

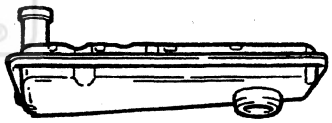

4x2 STYLE TRANSMISSION FLUID FILTER

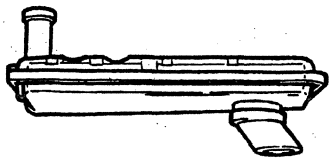

4x4 STYLE TRANSMISSION FLUID FILTER

D16550-A

Official Licensed Product

ASSEMBLY (Continued)

82. **CAUTION: Do not reuse old filter assembly and seal.**

Install a **new** filter assembly and seal by lubricating the seal with transmission fluid and pressing the filter into place.

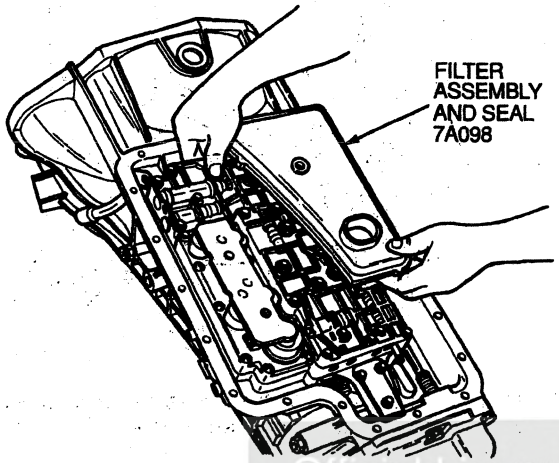

D8955-C

83. **CAUTION: Do not mix 4x4 and 4x2 transmission fluid filters and transmission pan assembly components. Transmission damage can result.**

Select the appropriate style filter assembly and transmission pan for either 4x2 or 4x4 vehicles.

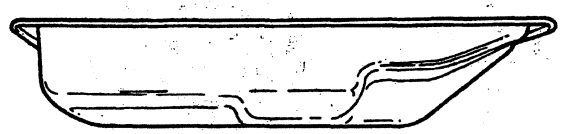

4x2 STYLE TRANSMISSION PAN

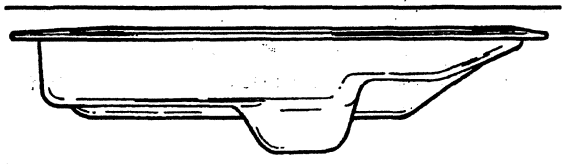

4x4 STYLE TRANSMISSION PAN

D16551-A

84. Place transmission pan magnet on dimple in bottom of transmission pan.

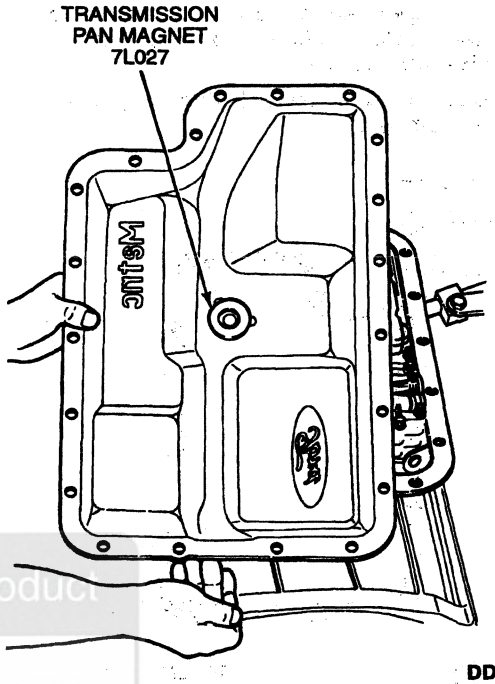

DD0650-A

Official Licensed Product Ford Motor Company

ASSEMBLY (Continued)

85. **CAUTION: Cork gaskets and elastomeric gaskets are not interchangeable. If you remove a cork gasket, replace it with a cork gasket. If you remove an elastomeric gasket, clean, inspect and reuse unless gasket is damaged. Be careful not to cut or bend elastomeric gasket.**

    Clean, inspect and reuse elastomeric gasket unless damaged.

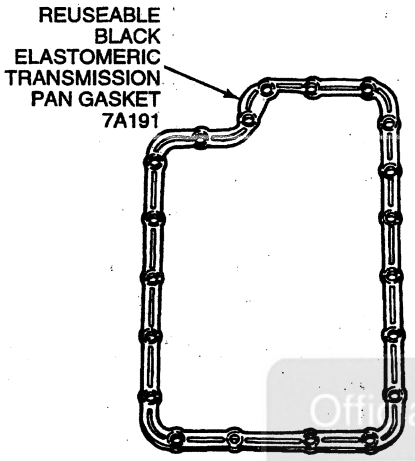

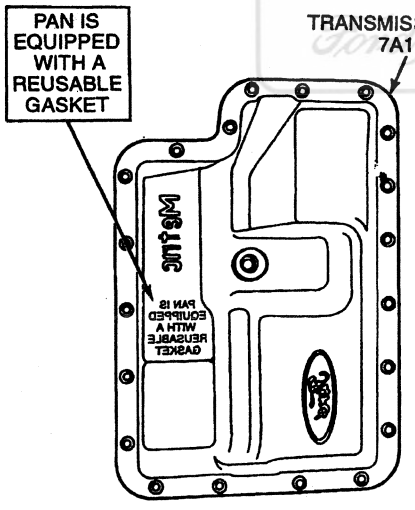

86. Install pan gasket and transmission pan. Install retaining bolts using a 10 mm socket. Tighten bolts to 14-16 N·m (10-12 lb-ft).

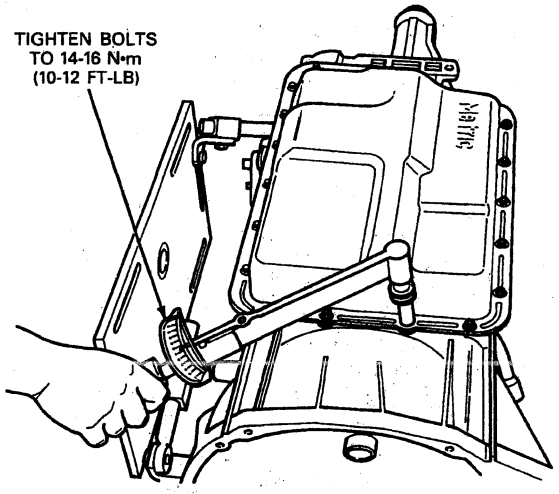

87. Rotate transmission so transmission pan is facing downward and install input shaft, long splined end first.

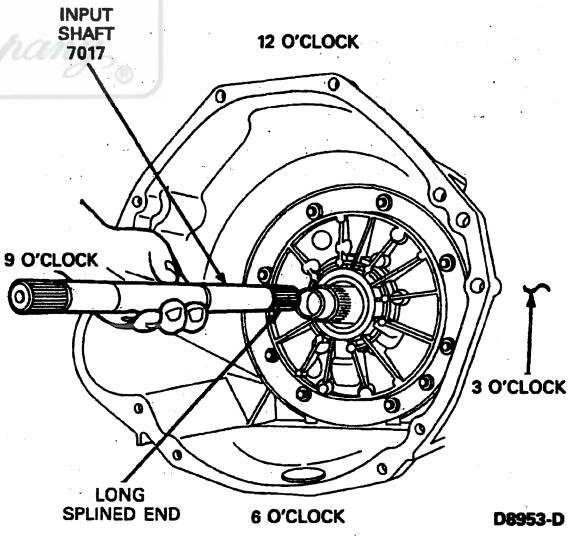

Official Licensed Product Ford Motor Company

ASSEMBLY (Continued)

88. **CAUTION: Use care when installing torque converter (7902) to avoid damage to the front pump stator support seal.**

    NOTE: Check the converter crankshaft pilot for nicks or damaged surfaces that can cause interference when installing the transmission to engine. Check the converter impeller hub for nicks or sharp edges that can damage the pump seal.

    Install torque converter using Torque Converter Handles T81P-7902-C. Carry torque converter with the handles in the 6 and 12 o'clock positions. Lift up slightly on the torque converter pilot and center the torque converter in the housing as shown in the following illustration. Holding the torque converter by the pilot, push and rotate the torque converter onto the front pump assembly until it bottoms out.

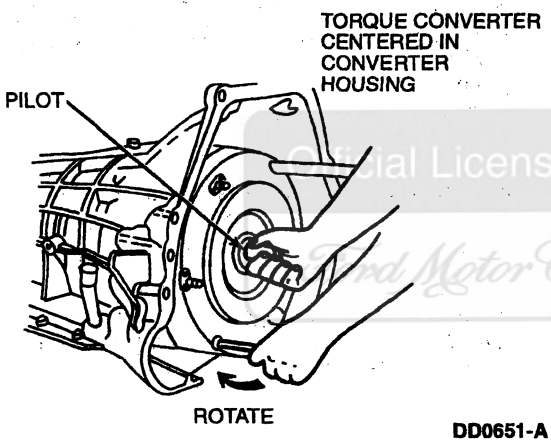

DD0651-A

89. Check the seating of the torque converter by placing a straightedge across the converter housing. There must be a gap between the converter pilot face and the straightedge.

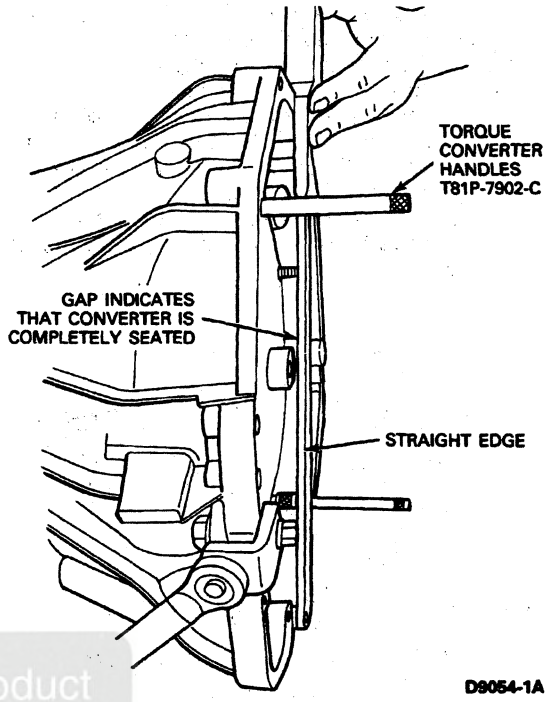

D9054-1A

90. Remove converter handles.

INSTALLATION

Transmission

1. Before installing transmission (7003), check wiring harness for damage. Check connectors for electrical integrity (terminal condition, corrosion, contamination and seal integrity). Service or replace as required.
2. **CAUTION: Prior to installation of the transmission assembly, the torque converter hub must be properly lubricated.**

   Lubricate torque converter pilot hub using Ford Multi-Purpose Grease DOAZ-19584-AA or equivalent meeting Ford specification ESA-M1C45-A.
3. Install transmission onto Rotunda Highlift Transmission Jack 014-00942 or equivalent and adapter as illustrated under Transmission, Removal, in this section.
4. On 4x4 vehicles only, install transfer case to transmission. Refer to Section 07-07B or Section 07-07C.
5. Check condition of transmission fluid filler tube O-ring, replace if damaged. Install fluid filler tube.
6. Rotate torque converter studs to align with flywheel mounting holes.

Official Licensed Product Ford Motor Company

INSTALLATION (Continued)

7 Raise transmission into position while watching for any obstructions Do not allow torque converter drive flats to disengage from pump gear Rubber converter housing access plug (7N171) can be removed to aid in the alignment of the converter studs Use care not to damage the flywheel (6375) and converter pilot The torque converter (7902) must rest squarely against the flywheel This indicates that the torque converter pilot is not binding in the engine crankshaft (6303)

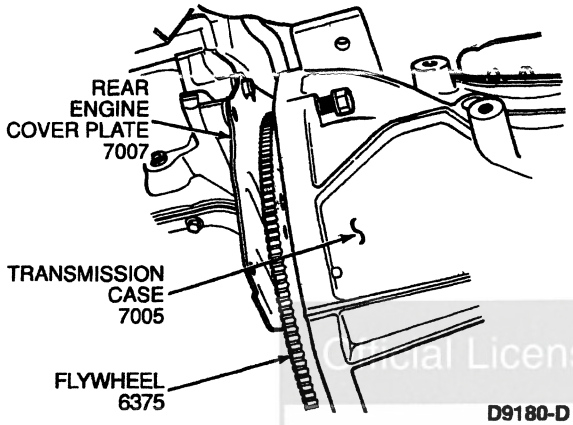

D9180-D

8 Install transmission-to-engine bolts Alternately snug-up bolts On gasoline engines, alternately tighten bolts to 52-71 N·m (38-52 lb-ft) On 7 3L diesel engines, alternately tighten bolts to 53-72 N·m (39-53 lb-ft)

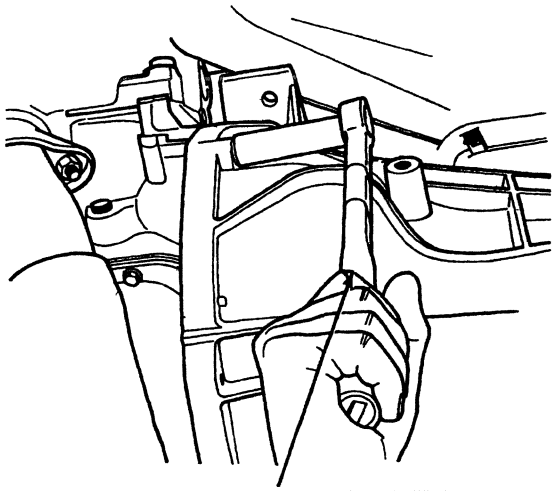

ON GASOLINE ENGINES, TIGHTEN BOLTS TO 52-71 N·m (38-52 LB-FT)
ON 7 3L DIESEL ENGINE, TIGHTEN BOLTS TO 53-72 N·m (39-53 LB-FT)

D9185-E

9 Install converter housing access plug, if removed

10 NOTE Hold case connector fitting with a wrench to prevent it from moving when tightening tube nut

Install transmission fluid cooler tubes to transmission fittings Tighten to 16-24 N·m (12-18 lb-ft)

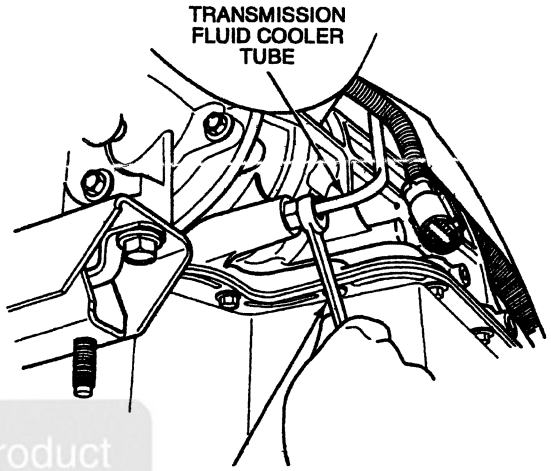

TIGHTEN FITTING TO 16-24 N·m (12-18 LB-FT)

DD0819-A

11 Install transmission support crossmember (6A023) and transmission retaining bolts Make sure that wiring harness is properly routed

Official Licensed Product Ford Motor Company

INSTALLATION (Continued)

Crossmember Installation, F-250 Heavy Duty, F-350 and F-Super Duty

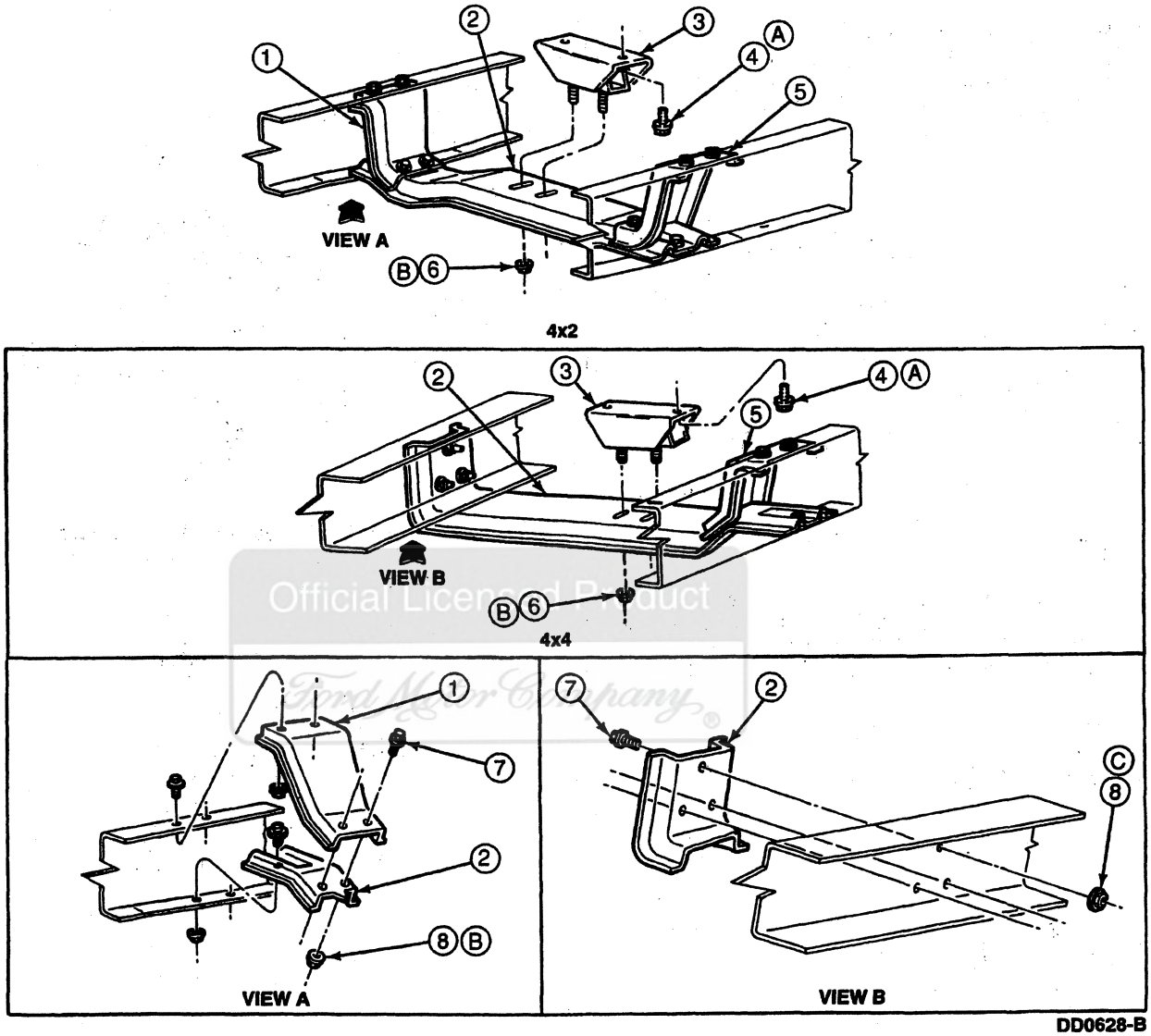

Official Licensed Product
Ford Motor Company

Item	Part Number	Description
1	6096	Rear Engine Support Bracket (RH)
2	6A023	Transmission Support Crossmember
3	60091	Insulator and Retainer
4	390066	Screw and Washer
5	6096	Rear Engine Support Bracket (LH)
6	N621945	Nut and Washer

(Continued)

Item	Part Number	Description
7	N802114	Bolt
8	N800937	Nut
A	—	Tighten to 81-108 N·m (60-80 Lb-Ft)
B	—	Tighten to 81-108 N·m (60-80 Lb-Ft) for All Except F-Super Duty. Tighten to 68-95 N·m (50-70 Lb-Ft) for F-Super Duty.
C	—	Tighten to 60-95 N·m (44-70 Lb-Ft)

INSTALLATION (Continued)

12. Remove safety strap and Rotunda Highlift Transmission Jack 014-00942 or equivalent.
13. Rotate crankshaft using a 15/16-inch socket on front pulley bolt to gain access to torque converter studs. Install new converter stud nuts using a 9/16-inch socket. Tighten to 30-41 N•m (22-30 lb-ft).

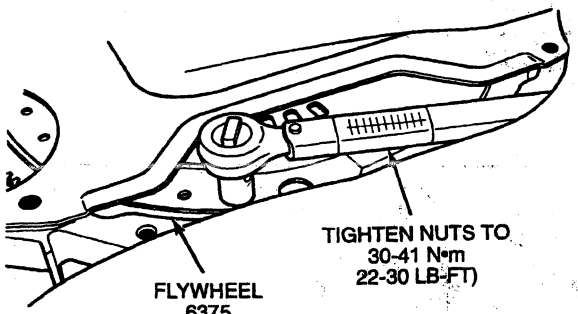

14. Install starter motor (11001). Refer to Section 03-06A or Section 03-06B.
15. Install rear engine plate cover and lower dust cover bolts (or screws). Tighten all bolts to 18-23 N•m (13-17 lb-ft). On 7.5L engines, tighten dust cover to plate screws 3-7 N•m (30-60 lb-in).

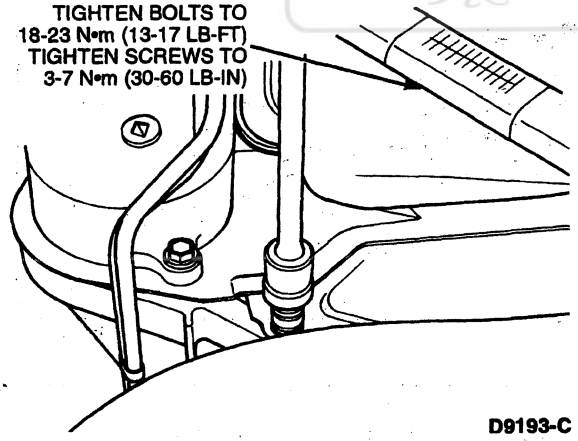

16. Completely seat solenoid body connector into solenoid body assembly receptacle by pushing on the top of the connector. An audible click indicates full contact. Verify connection by pulling on harness.

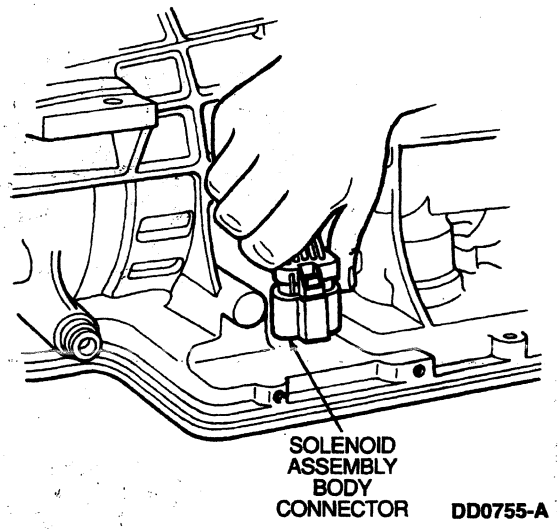

17. Install transmission heat shield (7A434) with off-set bending inward. Tighten to 9-12 N•m (77-104 lb-in).

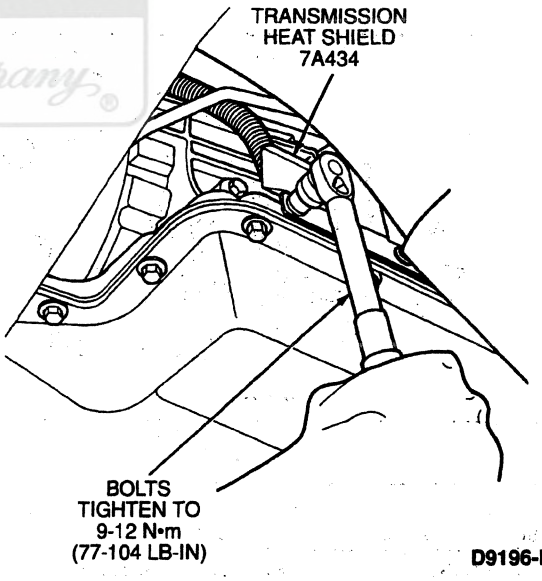

18. On 4x4 vehicles only, install new wire harness locators into transmission support crossmember.
19. Install new wire harness locator into extension housing wire bracket.
20. Install four-wheel drive switch connector.
21. Connect transfer case shift linkage. Refer to Section 07-07B or to Section 07-07C.
22. Install transmission range (TR) sensor connector. An audible click indicates full connection.
23. Install shift cable, or linkage on F-Super Duty vehicles. Refer to Section 07-05.

Ford Motor Company

INSTALLATION (Continued)

24. Install parking brake (F-Super Duty). Refer to Section 06-05 in the Body, Chassis Manual.
25. **CAUTION: Be careful not to nick or damage extension housing seal during driveshaft (4602) installation.**

    Prior to installation, lightly coat slip-yoke with Premium Long-Life Grease XG-1-C or -K or equivalent meeting Ford specification ESA-M1C198-A.
26. Install rear driveshaft. Refer to Section 05-01.
27. On 4x4 vehicles only, install front driveshaft. Refer to Section 05-01.
28. Remove safety stands and lower vehicle.
29. NOTE: When the battery (10653) has been disconnected and reconnected, some abnormal drive symptoms can occur while the powertrain control module (PCM)(12A650) relearns its adaptive strategy. The vehicle may need to be driven 16 km (10 miles) or more to relearn the strategy.

    Connect battery ground cable.
30. Fill the transmission to the proper level with Motorcraft MERCON® Multi-Purpose Automatic Transmission Fluid XT-2-QDX or MERCON® equivalent. Refer to Fluid Capacity chart under Specifications.

CLEANING AND INSPECTION

Transmission

CAUTION: Do not clean friction clutch plates, band and synthetic seals in a vapor degreaser or with any type of detergent solution.

To clean these parts, wipe them off with a lint-free cloth. Soak new clutch plates or bands in the specified transmission fluid for 15 minutes before being assembled.

Clean all other parts with suitable solvent and use moisture-free air to dry off all parts and clean out fluid passages.

Main Control Valve Body

1. Thoroughly clean all parts, except the non-metallic check balls, in clean solvent and blow dry with moisture-free compressed air.
2. Inspect all valve and plunger bores for scores. Check all fluid passages for obstructions. Inspect all mating surfaces for burrs and scores.
3. Inspect all springs for distortion. Check all valves and plungers for free movement in their respective bores. Valves and plungers, when dry, must fall from their own weight in their respective bores.
4. Roll the valves on a flat surface to check for bent condition.

Torque Converter and Fluid Cooler

When internal wear or damage has occurred in the transmission (7003), metal particles, clutch plate material or band material might have been carried into the torque converter (7902) and transmission fluid cooler (7A095). These contaminants are a major cause of recurring transmission troubles and must be removed from the system before the transmission is put back into the vehicle.

Whenever a transmission has been disassembled to replace worn or damaged parts or because the valve body sticks from foreign material, the torque converter, transmission fluid cooler and cooler tubes must be cleaned by using a mechanically agitated cleaner, such as Rotunda Torque Converter / Oil Cooler Cleaner 014-00028 or equivalent.

Flush the torque converter of the remaining solvent using this procedure:

1. Thoroughly drain the remaining solvent through the converter drain plug.
2. Add 1.9 liter (2 qt.) of clean transmission fluid to the torque converter. Agitate by hand.
3. Thoroughly drain the solution through the converter drain plug.

Transmission Fluid Cooler and Cooler Tubes Flushing and Cleaning

CAUTION: Test the Rotunda Torque Converter / Oil Cooler Cleaner 014-00028 or equivalent to make sure that a vigorous fluid flow is present before proceeding. Replace the system filter if the flow is weak or contaminated.

1. Disconnect the fluid cooler tubes from the transmission case fittings.
2. Connect the Rotunda Torque Converter / Oil Cooler Cleaner 014-00028 and Rotunda Oil Cooler Flusher Kit 014-00752 or equivalents as follows:
   a. Connect the pressure line to the fluid cooler inlet (rear) tube.
   b. Connect the return line to the fluid cooler outlet (front) tube.
   c. Place the outlet end of return line in the solvent tank reservoir.
3. Switch the solvent pump on. Allow the solvent to circulate a minimum of five minutes. During this time, cycle the solvent pump on and off to help dislodge contaminants.
4. Switch the solvent pump off.
5. Disconnect the pressure line from the fluid cooler inlet (rear) tube.
6. Using 50 psi (maximum) regulated compressed air, blow through the fluid cooler inlet tube until all solvent is removed.
7. Disconnect the return line from the fluid cooler outlet (front) tube.

Licensed Product Ford Motor Company

CLEANING AND INSPECTION (Continued)

8. Connect the fluid cooler tubes to the transmission case fittings. Tighten cooler tube fittings to 16-24 N·m (12-18 lb-ft).
9. Fill the transmission (7003) to the specified level with Motorcraft MERCON® Multi-Purpose Automatic Transmission Fluid XT-2-QDX or MERCON® equivalent. Refer to the Fluid Capacity chart in the Specifications portion of this section.

Forward, Direct, Intermediate, Overdrive, Coast and Reverse Clutches

1. Inspect the clutch cylinder thrust surfaces, piston bore, and clutch plate splines for scores, burrs or wear. Replace the clutch cylinder if it is badly scored or damaged.
2. Check the fluid passage in the clutch cylinder for obstructions. Clean out all fluid passages. Inspect clutch piston for scores and replace if necessary. Inspect the check balls for freedom of movement.
3. Check the clutch release spring for distortion and cracks. Replace the spring if it is distorted or cracked.
4. Inspect the friction clutch plates, steel clutch plates, and clutch pressure plate for worn or scored surfaces. Replace all parts that are scored, burred or burnt.
5. Check the clutch plates for flatness and wear on the clutch hub splines. Discard any plate that does not slide freely on the splines or that is not flat.
6. Check the clutch hub thrust surfaces for scores and the clutch hub splines for wear. Replace all worn parts.

One-Way Clutch

1. Inspect the outer and inner races for scores or damaged surface areas where the rollers or sprags contact the races.
2. Inspect the rollers, sprags, springs and cage for excessive wear or damage.

Output Shaft

1. Inspect the bearing surfaces of the output shaft (7060) for wear or scores. If excessive wear or scores are found, replace output shaft and inspect mating components.
2. Check the splines on the output shaft for wear. Replace the output shaft if the splines are excessively worn. Inspect all the bushings for wear. Replace if worn or damaged.

Electrical Connectors

Any time an electrical connector or solenoid body is disconnected, inspect the connector for terminal condition, corrosion and contamination. Also inspect the connector seal for damage. Clean, service or replace as required.

Case

Inspect the case (7005) assembly for cracks and stripped threads. Inspect the gasket surfaces and mating surfaces for burrs. Check the case vent (7034) for obstructions, and check all fluid passages for obstructions.

Inspect the case assembly bushing for scores. Check all parking linkage parts for wear or damage.

If the transmission case assembly thread is damaged, repair kits (helicoil) can be purchased from local jobbers. To service a damaged thread, follow procedures furnished in the helicoil kit.

Planet Assemblies

NOTE: Individual parts of the planet assemblies are not serviceable.

1. Check pins and shafts in the planet assemblies for loose fit and damage. Use a **new** planet assembly if either condition exists.
2. Inspect the pinion gears for damaged or excessively worn teeth.
3. Check for free rotation of the pinion gears.
4. Check for damage in the overdrive planet assembly.

Thrust Bearings

Wash the thrust bearings thoroughly in cleaning solvent. Blow the bearings dry with compressed air.

Make certain the bearings are clean and then lubricate with transmission fluid. Replace any bearings and races which show signs of pitting or roughness.

Torque Converter

When internal wear or damage has occurred in the transmission (7003), metal particles, clutch plate material, or band material might have been carried into the torque converter (7902) and transmission fluid cooler (7A095). These contaminants are a major cause of recurring transmission troubles and **MUST** be removed from the system before the transmission is put back into the vehicle.

Ford Motor Company Official Licensed Product

CLEANING AND INSPECTION (Continued)

Whenever a transmission has been disassembled to replace worn or damaged parts or because the valve body valves stick repeatedly from foreign material, the torque converter, transmission fluid cooler and transmission fluid cooler tubes and hoses MUST be cleaned by using a mechanically agitated cleaner, such as Rotunda Torque Converter / Oil Cooler Cleaner 014-00028 or equivalent.

NOTE: Mineral spirits used to clean the torque converter **must** be fresh, non-chlorinated and non-halogenated.

Flush the torque converter of the remaining solvent using this procedure.

1. **Thoroughly drain** remaining solvent through the drain plug.
2. Add 1.9L (2.0 U.S. quarts) of clean transmission fluid to the converter. Agitate by hand.
3. **Thoroughly drain** solution through the drain plug.

Transmission Fluid Cooler Tube Leakage

When fluid leakage is found at the transmission fluid cooler (7A095), the transmission fluid cooler must be replaced. Refer to Section 07-02.

When transmission fluid cooler steel lines must be replaced, each replacement line must be fabricated from the same size inside diameter and length steel line as the original line.

Using the old line as a guide, bend the new line as required. Add the necessary fittings, and install the line.

After the fittings have been tightened, check and add fluid as necessary. Check for fluid leaks.

Official Licensed Product

SPECIFICATIONS

LUBRICANT/ADHESIVE/CLEANER SPECIFICATIONS

Description	Part Number	Ford Specification
Motorcraft MERCON® Multi-Purpose Transmission Fluid	XT-2-QDX	MERCON®
Silicone Brake Caliper Grease and Dielectric Compound (Motorcraft WA-10)	D7AZ-19331-A	ESA-M1C171-A
Premium Long-Life Grease	XG-1-C or -K	ESA-M1C75-B
Multi-Purpose Grease	DOAZ-19584-AA	ESA-M1C45-A

FLUID CAPACITY

Motorcraft Mercon® Multi-Purpose Automatic Transmission Fluid XT-2-QDX or equivalent meeting MERCON® specification		
Transmission Type	**Liters**	**Quarts**
E4OD (4x2)	15	15.9
E4OD (4x4)	15.5	16.4

NOTE: The F-Super Duty Motorhome uses an additional 0.9L (1.0 quart) of fluid for the auxiliary transmission fluid cooler.

Approximate capacity includes transmission fluid cooler and transmission fluid cooler tubes. Use fluid level indicator (7A020) to determine actual fluid requirement and fluid specifications. Check level at operating temperature. DO NOT OVERFILL. An additional 0.3L (0.3 quart) is required if vehicle has an auxiliary transmission fluid cooler.

SHIFT SOLENOID OPERATION CHART

Transmission Range Selector Lever Position	PCM Commanded Gear	SS1	SS2	TCC	CCS
P/R/N	1	ON	OFF	OFF	OFF
D	1	ON	OFF	a	a
D	2	ON	ON	a	a
D	3	OFF	ON	a	a
D	4	OFF	OFF	a	OFF

(Continued)

SPECIFICATIONS (Continued)

SHIFT SOLENOID OPERATION CHART (Cont'd)

Transmission Range Selector Lever Position	PCM Commanded Gear	SS1	SS2	TCC	CCS
D Cancel	First Through Third Gear Only, SS1, SS2, TCC Same As Overdrive, CCS Always On.				
MANUAL 2	2	[a]	[a]	[a]	ON
MANUAL 1	2	OFF	OFF	OFF	ON
MANUAL 1	1	ON	OFF	OFF	ON

a Powertrain control module controlled.

CLUTCH PLATE USAGE AND CLEARANCE SPECIFICATIONS

Clutch	7B442 Steel[a]	7B164 Friction	Clearance mm (inch)	Selective Snap Rings	
				Part Number	Thickness mm (inch)
Intermediate Clutch					
All	2	3	—	E9TP-7B421-BA[a]	2.057-1.956[a] (0.081-0.077)
Direct Clutch					
All Except 7.3L DI Diesel	4	4	2.06-1.14 (0.081-0.045)	377128-S 377127-S 377126-S	2.210-2.108 (0.087-0.083) 1.981-1.880 (0.078-0.074) 1.753-1.651 (0.069-0.065)
7.3L DI Diesel	5	5	2.06-1.14 (0.081-0.045)	377128-S 377127-S 377126-S	2.210-2.108 (0.087-0.083) 1.981-1.880 (0.078-0.074) 1.753-1.651 (0.069-0.065)
Overdrive Clutch					
5.8L	2	2	1.33-0.68 (0.052-0.027)	E9TP-7B421-EA E9TP-7B421-DA E9TP-7B421-CA E9TP-7B421-BA E9TP-7B421-AA	3.607-3.505 (0.142-0.138) 3.099-3.000 (0.122-0.118) 2.591-2.489 (0.102-0.098) 2.057-1.956 (0.081-0.077) 1.549-1.448 (0.061-0.057)
7.5L, 7.3L DI Diesel	3	3	1.63-0.98 (0.064-0.039)	E9TP-7B421-EA E9TP-7B421-DA E9TP-7B421-CA E9TP-7B421-BA E9TP-7B421-AA	3.607-3.505 (0.142-0.138) 3.099-3.000 (0.122-0.118) 2.591-2.489 (0.102-0.098) 2.057-1.956 (0.081-0.077) 1.549-1.448 (0.061-0.057)
Coast Clutch					
All	2	2	1.27-0.76 (0.050-0.030)	N804952-S N804951-S N804950-S	2.261-2.159 (0.089-0.085) 1.854-1.753 (0.073-0.069) 1.448-1.346 (0.057-0.053)
Forward Clutch					
All	4[b]	4	1.40-0.76 (0.055-0.030)	377437-S 377127-S 377444-S 386841-S 385742-S	1.422-1.524 (0.056-0.060) 1.880-1.981 (0.074-0.078) 2.337-2.438 (0.092-0.096) 2.794-2.896 (0.110-0.114) 3.251-3.353 (0.128-0.132)
Reverse Clutch					
5.8L	5[c]	5	—	N805207-S[d]	1.880-1.981[d] (0.074-0.078)
7.3L DI Diesel/7.5L	6[c]	6	—	N805207-S[d]	1.880-1.981[d] (0.074-0.078)

a Plus one apply plate.
b Plus a steel wave cushion spring installed between the front pressure plate and steel separator plate.
c Plus a steel wave cushion spring installed between the reverse clutch piston and a steel separator.
d Not selective for this application.

TORQUE SPECIFICATIONS

Description	N·m	Lb-Ft	Lb-In
Engine Plate to Trans.	18-23	13-17	—
Center Support Fluid Feed Bolt	11-16	8-12	—

(Continued)

Official Licensed Product
Ford Motor Company

SPECIFICATIONS (Continued)

TORQUE SPECIFICATIONS (Cont'd)

Description	N·m	Lb-Ft	Lb-In
Connector-Cooler Tube to Case (Out/Front)	27-33	20-24	—
Connector — Radiator Nipple	23-31	17-23	—
Connector, Radiator-to-Tube	24-30	18-22	—
Cooler Tube-to-Transmission	16-24	12-18	—
Auxiliary Cooler Tube	10-14	7.4-10.3	—
Control Assembly to Pump	24-31	18-23	—
Torque Converter Drain Plug	24-27	18-20	—
Dust Cover to 7.3L Plate	18-23	13-17	—
Dust Cover to 7.5L Plate	3-7	—	30-60
Dust Cover to Case, 5.8L	18-23	13-17	—
Dust Cover to Case, 7.3L	18-23	13-17	—
Extension Housing to Case	41-54	30-40	—
Insulator and Retainer to Extension Housing	81-108	60-80	—
Transmission Support Crossmember to Insulator and Retainer, F-Super Duty and Motorhome	68-95	50-70	—
Transmission Support Crossmember to Insulator and Retainer, Except F-Super Duty and Motorhome	81-108	60-80	—
Transmission Fluid Filler Tube to 7.3L, Diesel Engine	18-23	13-17	—
Transmission Fluid Filler Tube to Valve Cover — 7.3L Diesel Engine	4-6	—	39-57
Transmission Fluid Filler Tube to Manifold — Nut 5.8L/7.5L	18--23	13-17	
Flywheel to Torque Converter — Nut	30-41	22-30	—
Transmission Heat Shield to Case	9-12	—	77-104
Inner Lever to Manual Control Shaft Nut	41-54	30-40	—

(Continued)

TORQUE SPECIFICATIONS (Cont'd)

Description	N·m	Lb-Ft	Lb-In
Inner OWC Race to Case	24-34	18-25	—
Line Pressure to Case — Plug	8-16	6-12	—
Lower Control Body to Main Control Body	9-11	—	80-100
Main and Lower Control Body to Case	9-11	—	80-100
Main Accumulator to Case	9-11	—	80-100
Manual Lever to Shaft — Nut	35-47	26-35	—
Transmission Range Sensor	8-10	—	77-85
Overdrive/Intermediate Cylinder Fluid Feed Bolt	8-14	6-10	—
Transmission Pan to Case	14-16	10-12	—
Pump Body to Case	24-31	18-23	—
Parking Rod Abutment to Case	22-27	16-20	—
Parking Rod Guide Plate to Case	22-27	16-20	—
Positive Detent Spring to Case	9-11	—	80-100
Reinforcing Plate to Case	9-11	—	80-100
Solenoid Body to Case	9-11	—	80-100
Speedometer Plug to Extension Housing	4-6	—	36-54
Starter Motor to Engine Plate	27-46	20-34	—
Transmission Fluid Cooler Hose Clamp	3.1-4.3	—	27-38
Auxiliary Transmission Fluid Cooler Retaining Screw	7-10	—	62-88.5
Stator Support to Pump Body	9-11	—	80-100
Trans. to Engine, All Except 7.3L Diesel Engine	52-71	38-52	—
Trans. to 7.3L Diesel Engine	53-72	39-53	—
Valve Assembly — Cooler Check to Case	34-41	25-30	—
Shift Bracket to Case	27-41	20-30	—

Official Licensed Product Ford Motor Company

BAND/CLUTCH APPLICATION CHART NO. 601

	Friction Elements							One-Way Clutches					
								Overdrive		Intermediate		Low	
Gear	Intermediate Band	Coast	Overdrive	Intermediate	Direct	Forward	Reverse	Drive	Coast	Drive	Coast	Drive	Coast
ⓓ first	—	[ab]	—	—	—	apply	—	HOLD	[ab]	—	—	HOLD	O/R
ⓓ second	—	[ab]	—	apply	—	apply	—	HOLD	[ab]	HOLD	O/R	O/R	O/R
ⓓ third	—	[ab]	—	apply	apply	apply	—	HOLD	[ab]	O/R	O/R	O/R	O/R
ⓓ fourth	—	—	apply	apply	apply	apply	—	O/R	O/R	O/R	O/R	O/R	O/R
1	—	apply	—	—	—	apply	apply	HOLD	CC	—	—	HOLD	—

(Continued)

SPECIFICATIONS (Continued)

BAND/CLUTCH APPLICATION CHART NO 601 (Cont'd)

	Friction Elements							One-Way Clutches					
								Overdrive		Intermediate		Low	
Gear	Inter-mediate Band	Coast	Over-drive	Inter-mediate	Direct	For-ward	Re-verse	Drive	Coast	Drive	Coast	Drive	Coast
2	apply	apply	—	apply	—	apply	—	HOLD	CC	HOLD	BA	O/R	O/R
reverse	—	apply	—	—	apply	—	apply	HOLD	CC	O/R	O/R	—	—

a In D range with the transmission control switch pressed, the coast clutch is applied and the O/D one-way clutch is bypassed
b On certain applications in O/D range, the coast clutch solenoid and clutch is controlled by the PCM

O/D — Overdrive
O/R — Overrunning
CC — Coast Friction Clutch Applied
BA — Band Applied

SPECIAL SERVICE TOOLS/EQUIPMENT

SPECIAL SERVICE TOOLS REQUIRED

Tool Number/ Description	Illustration
T50T-100-A Impact Slide Hammer	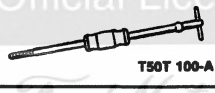 T50T 100-A
T57L-77820-A Pressure Gauge	T57L 77820-A
T58L-101-B Puller	T58L 101-B
T59L-100-B Impact Slide Hammer	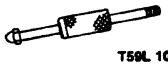 T59L 100-B
T61L 7657 B Extension Housing Seal Replacer	T61L 7657 B
T63L-77837-A Front Pump Seal Replacer	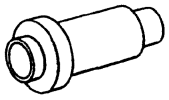 T63L 77837 A
T65L-77515-A Clutch Spring Compressor	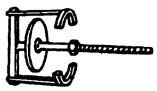 T65L-77515-A

(Continued)

SPECIAL SERVICE TOOLS REQUIRED (Cont'd)

Tool Number/ Description	Illustration
T71P-19703 C O-Ring Tool	T71P-19703-C
T74P-77248 A Seal Remover	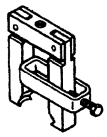 T74P-77248-A
T74P-77498-A Shift Lever Seal Replacer	T74P 77498-A
T76L-7902 C Converter Clutch Torquing Tool	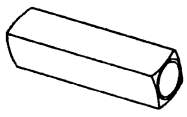 T76L 7902-C
T77F-1176 A Threaded Drawbar	T77F 1176-A
T77L 7697 C Extension Housing Bushing Replacer	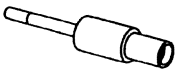 T77L 7697-C

(Continued)

SPECIAL SERVICE TOOLS/EQUIPMENT (Continued)

SPECIAL SERVICE TOOLS REQUIRED (Cont'd)

Tool Number/ Description	Illustration
T77L-7697-D Extension Housing Bushing Remover	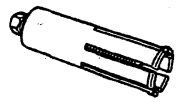 T77L-7697-D
T77L-7902-R Converter Clutch Holding Tool	T77L-7902-R
T77L-77548-A Lip Seal Protector	T77L-77548-A
T78P-3504-N Lock Nut Pin Remover	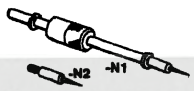 T78P-3504-N
T80L-7902-A End Play Checking Tool	T80L-7902-A
T81P-7902-C Torque Converter Handles	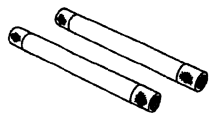 T81P-7902-C
T88C-77000-AH Return Spring Compressor	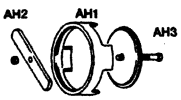 T88C-77000-AH
T89T-70010-A Pump Puller Adapter	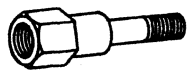 T89T-70010-A
T89T-70010-B Aligning Pin	T89T-70010-B

(Continued)

SPECIAL SERVICE TOOLS REQUIRED (Cont'd)

Tool Number/ Description	Illustration
T89T-70010-C Clutch Spring Fixture	T89T-70010-C
T89T-70010-E Clutch Remover/Replacer	T89T-70010-E
T89T-70010-F Clutch Spring Compressor Plate	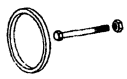 T89T-70010-F
T89T-70010-G Oil Filler Tube Replacer	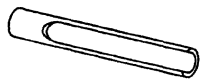 T89T-70010-G
T92P-70010-AH Transmission Range (TR) Sensor (MLPS) Alignment Tool	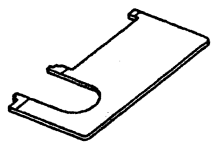 T92P-70010-AH
T92T-77110-AH Rear Case Bushing Replacer	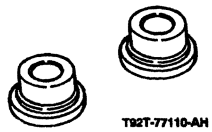 T92T-77110-AH

SPECIAL SERVICE TOOLS DESIRED

Tool Number	Description
D80P-4201-A	Depth Micrometer
D89L-77000-A	Banding Tool
TOOL-1175-AC	Seal Remover
TOOL-4201-C	Dial Indicator with Bracketry

ROTUNDA EQUIPMENT

Model	Description
007-000130	Transmission Tester
007-00086	Transmission Range (TR) Sensor ("MLPS" Manual Lever Position Sensor Cable)
007-00107	Cable and Overlay
007-00500	New Generation Star (NGS) Tester
014-R1067	Leak Test Kit
014-00028	Torque Converter/Oil Cooler Cleaner
014-00106	Car/Truck Engine Repair Stand

(Continued)

Official Licensed Product Ford Motor Company

SPECIAL SERVICE TOOLS/EQUIPMENT (Continued)

ROTUNDA EQUIPMENT (Cont'd)

Model	Description
014-00322	EEC IV 60-Pin Breakout Box
014-00407	Digital Volt-Ohmmeter
014-00752	Oil Cooler Flusher Kit

(Continued)

ROTUNDA EQUIPMENT (Cont'd)

Model	Description
014 00763	E4OD Transmission Jack Adapter
014 00942	Highlift Transmission Jack
014 00950	EEC V 104-Pin Breakout Box

Official Licensed Product
Ford Motor Company

SECTION 07-02 Transmission, Automatic, Cooling

SUBJECT	PAGE
VEHICLE APPLICATION	07-02-1
DESCRIPTION AND OPERATION	
Fluid Cooler, Auxiliary	07-02-1
Fluid Cooler, Integral	07-02-1
DIAGNOSIS AND TESTING	
Transmission Fluid Cooler	07-02-1
Inspection and Verification	07-02-1
Symptom Chart	07-02-2
REMOVAL AND INSTALLATION	
Transmission Fluid Cooler, Auxiliary	07-02-2
REMOVAL AND INSTALLATION (Cont'd)	
Fluid Cooler Hose(s)	07-02-7
Fluid Cooler Tube(s)	07-02-4
CLEANING AND INSPECTION	
Transmission Fluid Cooler	07-02-7
Transmission Fluid Cooler Tube(s)/Hose(s)	07-02-8
SPECIFICATIONS	07-02-8

VEHICLE APPLICATION

F-250 Heavy Duty, F-350 and F-Super Duty

DESCRIPTION AND OPERATION

Fluid Cooler, Integral

All vehicles with an automatic transmission (7003) are equipped with a transmission fluid cooler (7A095) that is integral to the radiator assembly In operation, the transmission fluid travels from the transmission to the transmission fluid cooler in the radiator side or bottom tank The transmission fluid cooler transfers the heat from the transmission fluid to the engine coolant

Official Licensed Product Ford Motor Company

Fluid Cooler, Auxiliary

Some vehicles with an automatic transmission (7003) are equipped with an optional auxiliary transmission fluid cooler (7A095) that is mounted to the radiator assembly In operation, the transmission fluid travels from the transmission to the auxiliary transmission fluid cooler The transmission fluid cooler transfers the heat from the transmission fluid to the outside air

DIAGNOSIS AND TESTING

Transmission Fluid Cooler

Inspection and Verification

When fluid leakage is found at transmission fluid cooler (7A095), replace transmission fluid cooler Refer to Transmission Fluid Cooler in the Removal and Installation portion of this section

DIAGNOSIS AND TESTING (Continued)

Symptom Chart

TRANSMISSION OVERHEATING

Condition	Possible Source	Action
• Transmission Overheating	• Clogged transmission fluid cooler. • System leaks. • Stuck cooler fitting check ball.	• INSPECT transmission fluid cooler for plugging. SERVICE as required. • INSPECT transmission fluid cooler for leaks. SERVICE as required. • REMOVE cooler line and CHECK case-mounted cooler line fitting for stuck check ball. SERVICE as required.

REMOVAL AND INSTALLATION

Transmission Fluid Cooler, Auxiliary

Removal

1. Place a drain pan under the transmission fluid cooler (7A095).
2. Disconnect all fluid cooler tubes and hoses at the transmission fluid cooler. Plug all port openings.
3. Remove retainer nuts and bolts, and remove transmission fluid cooler from vehicle.

Installation

1. Follow the removal procedures in reverse order.
2. Replenish transmission fluid to proper operating levels.
3. Start engine and check for leaks.

F-Super Duty Motorhome Chassis (Except Diesel)

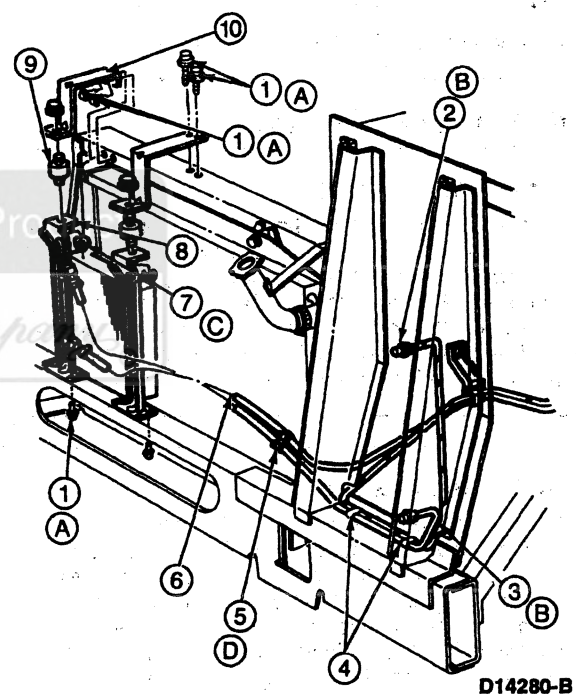

D14280-B

Item	Part Number	Description
1	W611102-S2	Screw and Washer
2	7D273	Fluid Tube Connector
3	7F113	Inlet Tube
4	372223-S101	C-Clip
5	376240	Clamp
6	N809635	Hose
7	55763	Nut
8	7A095	Transmission Fluid Cooler
9	6C645	Insulator
10	6K761	Fluid Cooler Upper Bracket

(Continued)

REMOVAL AND INSTALLATION (Continued)

Item	Part Number	Description
A	—	Tighten to 5.2-7.2 N·m (46-64 Lb-In)
B	—	Tighten to 24-30 N·m (18-22 Lb-Ft)
C	—	Tighten to 16-24 N·m (12-18 Lb-Ft)
D	—	Tighten to 3.1-4.3 N·m (27-38 Lb-In)

F-250 Heavy-Duty, F-350 and F-Super Duty, 7.3L Diesel

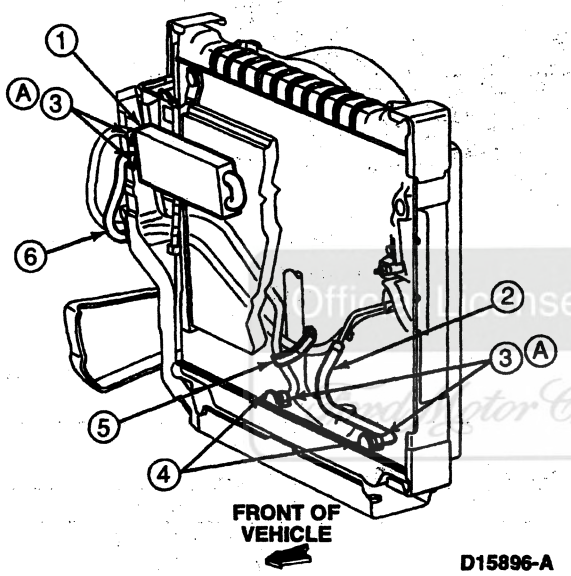

Item	Part Number	Description
1	7A095	Transmission Fluid Cooler
2	N809635-S183A	Hose

(Continued)

Item	Part Number	Description
3	7C107	Hose Clamp
4	7G058	Connector
5	—	Strap, Tie
6	7890	Hose
A	—	Tighten to 3.1-4.3 N·m (27-38 Lb-In)

Unofficial Licensed Product Motorcraft Company

REMOVAL AND INSTALLATION (Continued)

F-250 Heavy-Duty, F-350 and F-Super Duty, 7.3L Diesel (Continued)

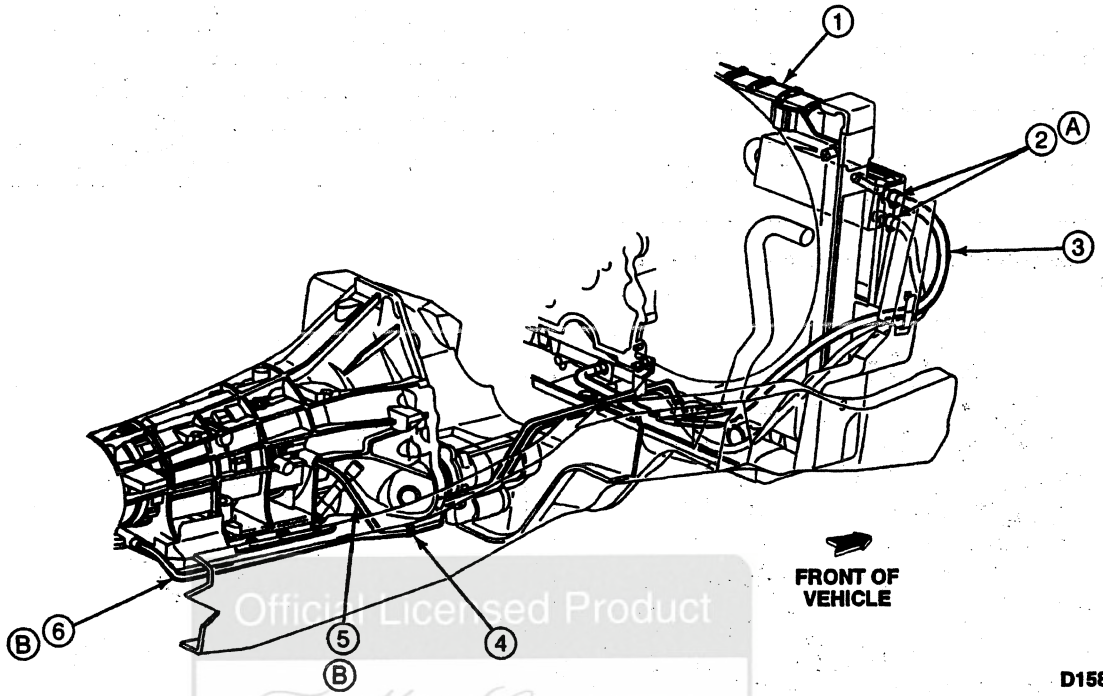

Item	Part Number	Description
1	8005	Radiator
2	7C107	Hose Clamp
3	7890	Hose
4	372223-S101	C-Clip
5	7A031	Fluid Cooler Tube

(Continued)

Item	Part Number	Description
6	7A030	Fluid Cooler Inlet Tube
A	—	Tighten to 3.1-4.3 N·m (27-38 Lb-In)
B	—	Tighten to 16-24 N·m (12-18 Lb-Ft)

Fluid Cooler Tube(s)

Removal and Installation

When one or more of the fluid cooler steel tubes must be replaced, each replacement tube must be fabricated from the same size steel tubing as the original line.

Using the original fluid tube as a guide, bend the new tube as required. Add the necessary fittings, and install the tube. Make sure that the replacement tube has adequate clearance relative to other components, especially the exhaust system and parts having sharp edges. All tube nuts must be hand-started before being tightened to specification.

After the fittings have been tightened, add fluid as needed, and check for fluid leaks.

REMOVAL AND INSTALLATION (Continued)

E4OD Transmission, F-250 Heavy Duty, F-350 and F-Super Duty, 5.8L, 7.5L

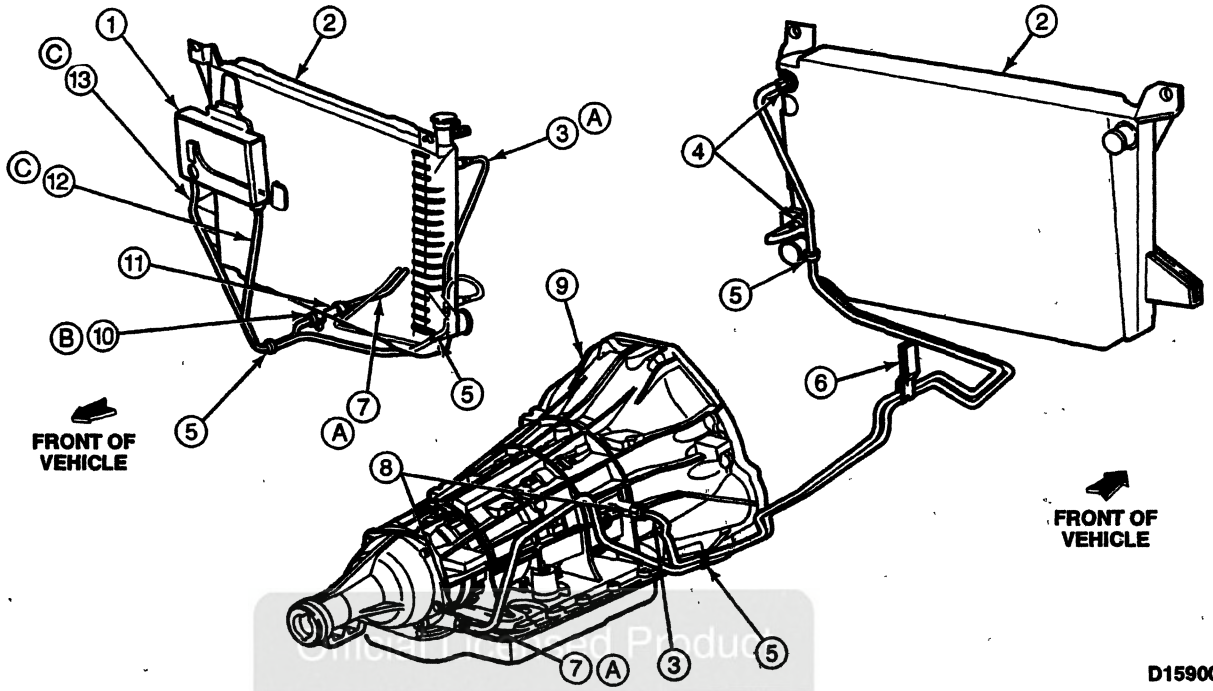

Item	Part Number	Description
1	7A095	Transmission Fluid Cooler
2	8005	Radiator
3	7A031	Fluid Cooler Tube
4	7D273	Fluid Tube Connector
5	372223-S101	C-Clip
6	7N291	Transmission Fluid Cooler Tube Clip
7	7A030	Fluid Cooler Inlet Tube
8	—	Connector (Part of 7000)
9	7000	Automatic Transmission

(Continued)

Item	Part Number	Description
10	376240-S	Clamp
11	7890	Hose Assy, Transmission Fluid Cooler
12	7F113	Inlet Tube
13	7F112	Outlet Tube
A	—	Tighten to 16-24 N·m (12-18 Lb-Ft)
B	—	Tighten to 3.1-4.3 N·m (27-38 Lb-In)
C	—	Tighten to 10-14 N·m (7-11 Lb-Ft)

REMOVAL AND INSTALLATION (Continued)

Transmission Fluid Cooler Tubes, F-Super Duty Motorhome Chassis (Except Diesel)

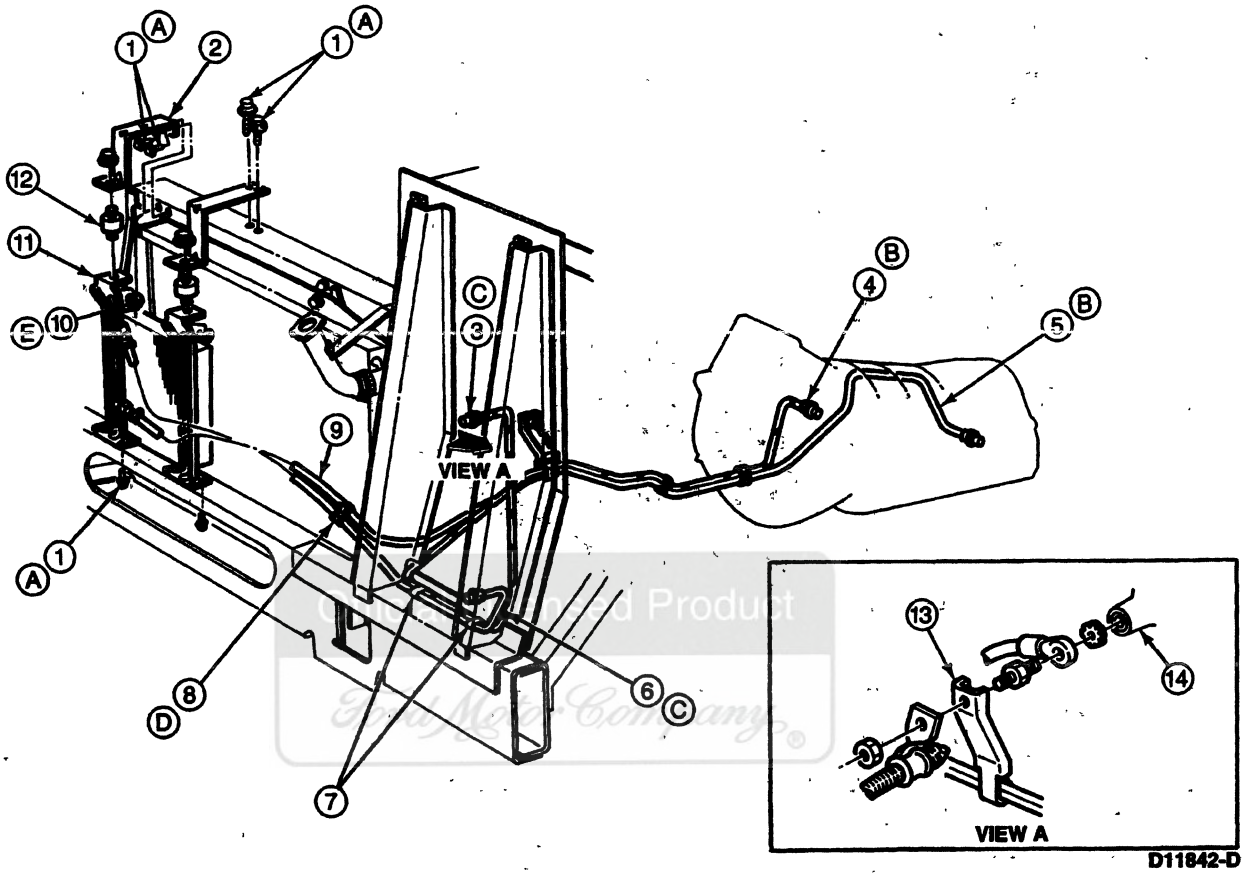

Item	Part Number	Description
1	W611102-S2	Screw and Washer
2	6K761	Fluid Cooler Upper Bracket
3	7D273	Fluid Tube Connector
4	7A031	Fluid Cooler Tube
5	7A030	Fluid Cooler Inlet Tube
6	7F113	Inlet Tube
7	372223-S101	C-Clip
8	376240	Clamp
9	N809635	Hose
10	55736	Nut
11	7A095	Transmission Fluid Cooler
12	6C645	Insulator

(Continued)

Item	Part Number	Description
13	7N291	Transmission Fluid Cooler Tube Clip
14	6010	Cylinder Blocks
A	—	Tighten to 5.2-7.2 N·m (46-64 Lb-In)
B	—	Tighten to 16-24 N·m (12-18 Lb-Ft)
C	—	Tighten to 25-30 N·m (18-22 Lb-Ft)
D	—	Tighten to 3.1-4.3 N·m (27-38 Lb-In)
E	—	Tighten to 16-24 N·m (12-18 Lb-Ft)

REMOVAL AND INSTALLATION (Continued)

F-Super Duty Commercial Chassis, 7.3L

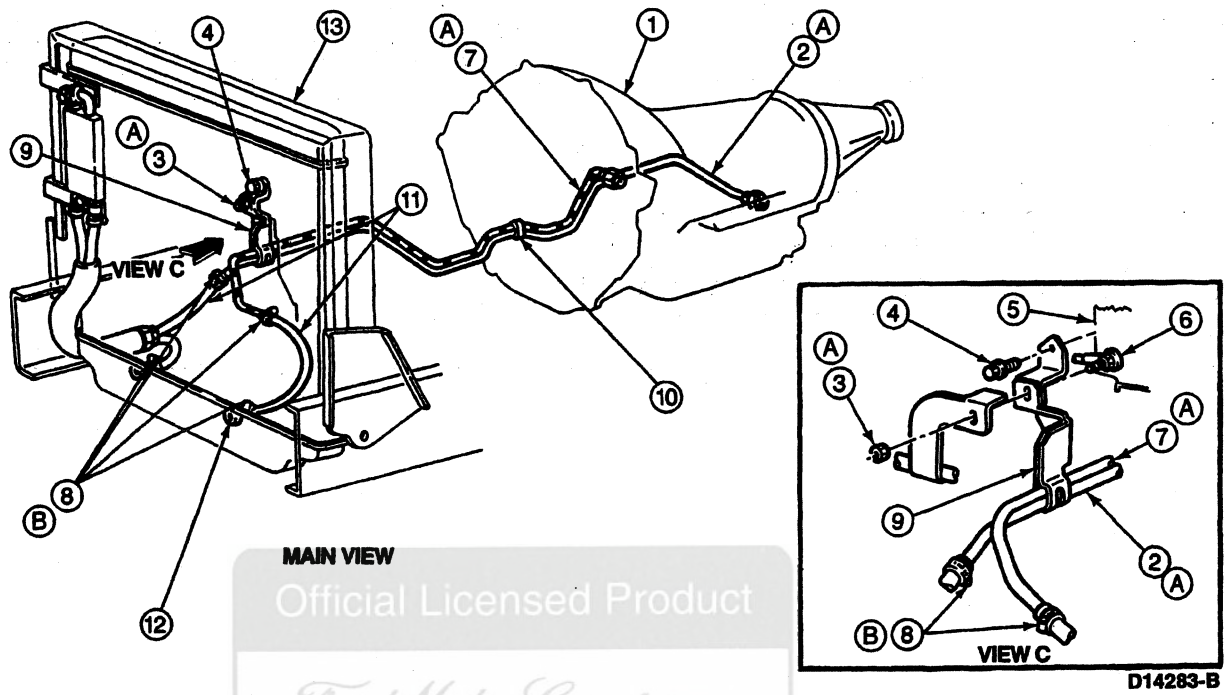

Official Licensed Product
Ford Motor Company

Item	Part Number	Description
1	7003	Transmission
2	7A030	Inlet Tube
3	33799	Nut, 3/8-16 Hex
4	57643	Screw and Washer, 3/8-16 x .62 Hex-Head
5	6010	Cylinder Blocks
6	14301	Battery Ground Cable
7	7A031	Outlet Tube
8	376240-S	Hose Clamp

(Continued)

Item	Part Number	Description
9	7N291	Transmission Fluid Cooler Tube Clip
10	372223-S101	C-Clip
11	N809635-S276A	Hose, 7.9 mm ID
12	—	*Connector* (Part of 8005 Radiator)
13	8005	Radiator
A	—	Tighten to 16-24 N·m (12-18 Lb-Ft)
B	—	Tighten to 2.8-4.0 N·m (25-35 Lb-In)

Fluid Cooler Hose(s)

Removal

1. Place a drain pan under the fluid cooler hose to be removed.
2. Loosen the fluid cooler hose clamps.
3. Remove the fluid cooler hose.

Installation

Follow the removal procedure in reverse order. Replenish transmission fluid to proper operating levels. Start engine and check for leaks.

Tighten the fluid cooler hose clamps to 3.1-4.3 N·m (27-38 lb-in).

CLEANING AND INSPECTION

Transmission Fluid Cooler

When internal damage has occurred in the transmission (7003), metal particles, clutch plate material, or band material may have been carried into the transmission fluid cooler (7A095). These contaminants must be cleaned out of the transmission fluid cooler and fluid cooler tubes before the transmission is put back into service.

CLEANING AND INSPECTION (Continued)

Transmission Fluid Cooler Tube(s)/Hose(s)

Upon inspection, any fluid cooler tubes or hoses that are defective or damaged must be replaced. Refer to the procedures in the Removal and Installation portion of this section.

SPECIFICATIONS

TORQUE SPECIFICATIONS

Description	N·m	Lb-Ft	Lb-In
Fluid Cooler Nuts	16-24	12-18	—
Fluid Cooler Hose Clamps	3.1-4.3	—	27-38

(Continued)

TORQUE SPECIFICATIONS (Cont'd)

Description	N·m	Lb-Ft	Lb-In
Fluid Cooler Screw and Washer	5.2-7.2	—	46-64
Fluid Cooler Tube at Auxiliary Cooler	10-14	7-11	—

Official Licensed Product
Ford Motor Company

SECTION 07-03 Transmission, Manual, Model S5-47 ZF

SUBJECT	PAGE
VEHICLE APPLICATION	07-03-1
DESCRIPTION AND OPERATION	
Description	07-03-1
Powerflow	07-03-3
DIAGNOSIS AND TESTING	
Transmission	07-03-4
Inspection and Verification	07-03-4
Symptom Charts	07-03-6
REMOVAL	
Front Seal	07-03-17
Rear Seal, 4x2 Transmissions (Except F-Super Duty)	07-03-18
Rear Seal, 4x4 and F-Super Duty Series Transmissions	07-03-18
Shift Lever and Boot	07-03-18
Transmission (4x2)	07-03-13
Transmission (4x4)	07-03-16
DISASSEMBLY	
Extension Housing — Shift Rail Bearing, Countershaft and Mainshaft Bearing Outer Race	07-03-25
Transmission	07-03-19
DISASSEMBLY AND ASSEMBLY OF SUBASSEMBLIES	
Bearing, Countershaft	07-03-48
Case	07-03-27
Input Shaft and Bearing	07-03-30
Mainshaft	07-03-32
Shift Lever Housing	07-03-27
ASSEMBLY	
Transmission	07-03-49
INSTALLATION	
Extension Housing — Shift Rail Bearing, Countershaft and Mainshaft Bearing Outer Race	07-03-58
Rear Seal	07-03-59
Shift Lever and Boot	07-03-57
Transmission (4x2)	07-03-59
Transmission (4x4)	07-03-62
CLEANING AND INSPECTION	
Bearing Retainers	07-03-65
Bearings	07-03-63
Countershaft	07-03-64
Extension Housing	07-03-63
Gears	07-03-64
Input Shaft	07-03-64
Output Shaft	07-03-64
Speedometer Gears	07-03-65
Synchronizers	07-03-64
Thrust Washers	07-03-65
Transmission	07-03-62
ADJUSTMENTS	
Bearing Preload Adjustment	07-03-65
Countershaft Tapered Roller Bearing Preload Measurement	07-03-66
Input Shaft and Mainshaft Tapered Roller Bearing Preload Measurement	07-03-65
SPECIFICATIONS	
Gear Ratios	07-03-67
Inspection Standards and Tolerances	07-03-68
SPECIAL SERVICE TOOLS/EQUIPMENT	07-03-69

VEHICLE APPLICATION

F-250 Heavy Duty, F-350, and F-Super Duty

DESCRIPTION AND OPERATION

Description

The model number for the ZF transmission (7003) is S5-47. This model number can be divided into three parts. First, "S" designates a synchronized transmission. Second, "5" designates the number of forward gears. Finally, "47" is the approximate maximum input torque capacity in tens of lb-ft. In this case, 47 equals 470 lb-ft input torque capacity.

The S5-47 ZF transmission is available in both wide ratio and close ratio versions. The wide ratio version is available for all F-Series vehicles over 8500 lb GVW with gasoline engines (6007). The close ratio version is available only in F-Series vehicles with a 7.3L diesel engine and a GVW over 8500 lb. The ratios shown in the following chart.

	1st	2nd	3rd	4th	5th	Reverse
Close Ratio (Diesel)	5.08	2.60	1.53	1.0	0.77	4.66
Wide Ratio (Gasoline, Diesel)	5.72	2.94	1.61	1.0	0.76	5.24

DESCRIPTION AND OPERATION (Continued)

The transmission features an aluminum case (7005) with an integral clutch housing. Because of the aluminum case, the tapered roller bearings of the transmission shafts must be fitted under preload. This is because heat expansion of the aluminum case is greater than that of the steel alloy mainshaft and countershaft cluster gear (7113). If the bearings were not pre-loaded, this would result in excessive end play when the case expands in warm, loaded operating conditions. The transmission also features shrink-fit gears on the countershaft cluster gear. Shrink-fit gears are connected to the countershaft cluster gear by friction only, rather than connected through splines. The gear is heated and lightly pressed onto the countershaft cluster gear. The subsequent cooling of the gear provides the shrink fitting. The countershaft cluster gear is serviced as an assembly.

NOTE: For vehicles equipped with the 7.3L diesel engine, this transmission requires use of synthetic Motorcraft MERCON® ATF XT-2-QDX or MERCON® equivalent.

Transmission Identification

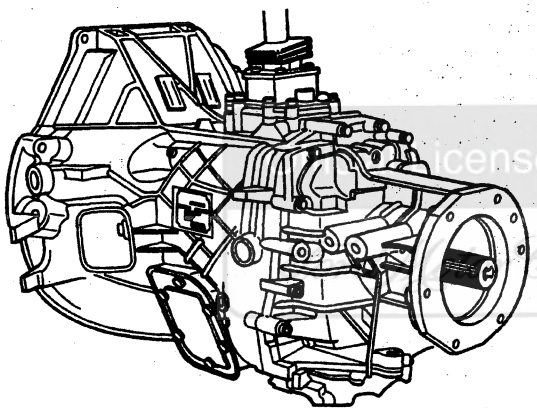

ZF S5-47 TRANSMISSION – 4X4 AND F-SUPER DUTY VERSION

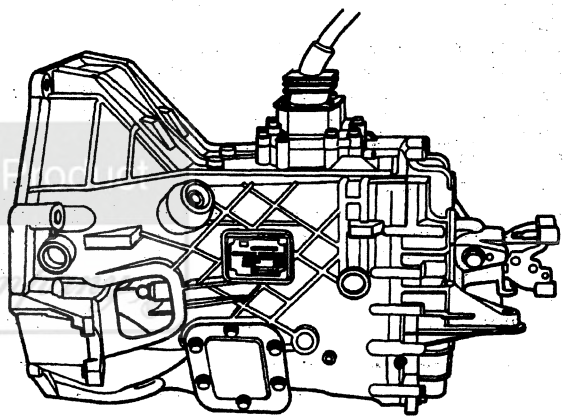

ZF S5-47 TRANSMISSION – 4X2 VERSION (EXCEPT F-SUPER DUTY)

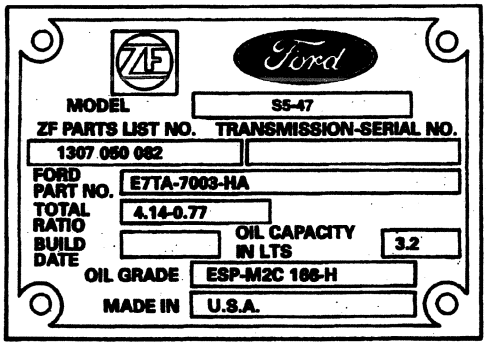

TRANSMISSION IDENTIFICATION PLATE

DC0058-A

DESCRIPTION AND OPERATION (Continued)

Powerflow

Powerflow in Neutral

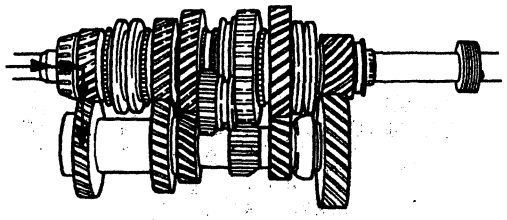

C12989-A

- The input gear drives the countershaft.
- The countershaft gears drive the 1st, 2nd and 3rd gears on the output shaft.
- All synchronizers are centered (disengaged).
- No gears are engaged to the output shaft.
- The output shaft is not engaged to the input shaft.

Powerflow in 1st Gear

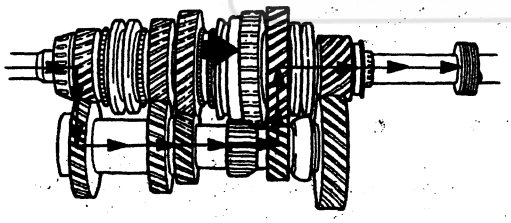

C12990-A

- The input gear drives the countershaft.
- The countershaft gears drive the 1st, 2nd and 3rd gears on the output shaft.
- The 1-2 synchronizer hub is splined to the output shaft.
- When the synchronizer sleeve is shifted rearward, the 1st gear is engaged to the output shaft through the synchronizer hub.
- The output shaft rotates once for every 5.08 CR or 5.72 WR rotations of the crankshaft.

Powerflow in 2nd Gear

1-2 SYNCHRONIZER SHIFTED FORWARD

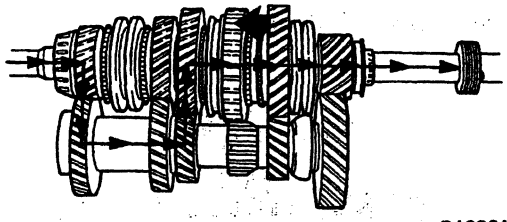

C12991-A

- The input gear drives the countershaft.
- The countershaft gears drive the 1st, 2nd and 3rd gears on the output shaft.
- The 1-2 synchronizer hub is splined to the output shaft.
- When the synchronizer sleeve is shifted forward, the 2nd gear is engaged to the output shaft through the synchronizer hub.
- The output shaft rotates once for every 2.60 CR or 2.94 WR rotations of the crankshaft.

Powerflow in 3rd Gear

3-4 SYNCHRONIZER SHIFTED REARWARD

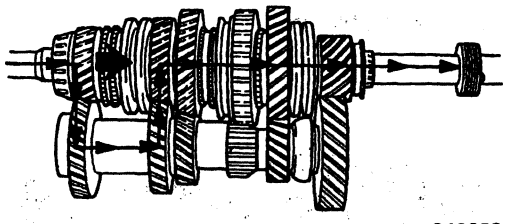

C12992-A

- The input gear drives the countershaft.
- The countershaft gears drive the 1st, 2nd and 3rd gears on the output shaft.
- The 3-4 synchronizer hub is splined to the output shaft.

Official Licensed Product
Ford Motor Company

DESCRIPTION AND OPERATION (Continued)

- When the synchronizer sleeve is shifted rearward, the 3rd gear is engaged to the output shaft through the synchronizer hub.
- The output shaft rotates once for every 1.53 CR or 1.61 WR rotations of the crankshaft.

Powerflow in 4th Gear

3-4 SYNCHRONIZER SHIFTED FORWARD

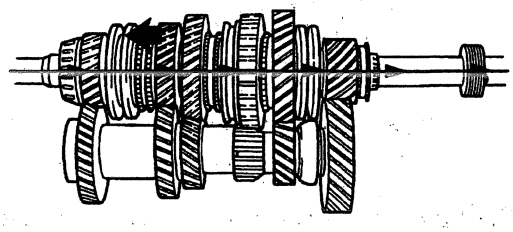

C12993-A

- The input gear drives the countershaft.
- The countershaft gears drive the 1st, 2nd and 3rd gears on the output shaft.
- The 3-4 synchronizer hub is splined to the output shaft, but no gears are engaged to the output shaft.
- When the synchronzier sleeve is shifted forward, the input shaft is locked to the output shaft through the synchronizer hub.
- The output shaft rotates once for every rotation of the crankshaft.

Powerflow in 5th Gear

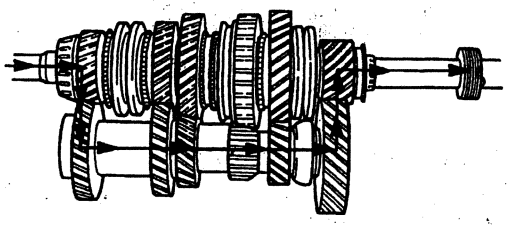

C12994-A

- The input gear drives the countershaft.
- The countershaft gears drive the 1st, 2nd and 3rd gears on the output shaft, and the 5th gear synchronizer.
- The 5th gear synchronizer is splined to the countershaft.
- When the synchronizer sleeve is shifted forward, the 5th gear is engaged to the countershaft.
- The countershaft 5th gear drives the output shaft 5th gear.
- The output shaft is driven in overdrive. Less than one 0.77 CR or 0.76 WR rotation of the crankshaft is needed for each rotation of the output shaft.

Powerflow in Reverse Gear

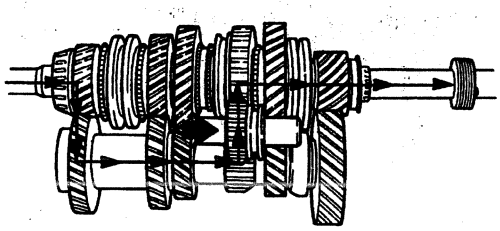

C12995-A

- The input gear drives the countershaft.
- The countershaft drives the reverse idler gear, after the idler is slid into engagement.
- The reverse idler gear drives the teeth cut along the outside of the 1-2 synchronizer sleeve (which is splined to the output shaft through the hub), which reverses the rotation of the output shaft and drives it in reduction.

DIAGNOSIS AND TESTING

Transmission

Inspection and Verification

A troubleshooting guide has been put together to assist in diagnosing transmission-related problems. Use the transmission noise evaluation procedure and troubleshooting guides on the following pages, or refer to Section 08-00. Remember, it is important to get an accurate description of the complaint before any diagnosis can be performed. Ask questions as to whether it occurs hot or cold, during shifting, driving at a particular speed or in a particular gear. If possible, have the customer demonstrate the concern.

Cold Transmission

- Drive the vehicle in all gears (1-5 and reverse gears).
- Evaluate the noise in neutral. Check if there are any noise changes in a particular gear, i.e., 4th gear. In 4th gear, the countershaft cluster gear (7113) is not under load.
- Check if the noise increases when the transmission (7003) is warming up.
- See if the noise is related to engine speed, road speed or gear selection.

Official Licensed Product

DIAGNOSIS AND TESTING (Continued)

Warm Transmission

- Check all gears plus reverse gear and make note of any noise changes in a particular gear.
- Check noise in neutral while parked. Check if the noise disappears at a certain engine rpm or with the clutch pedal depressed.
- Drive in the gear in which the noise is most noticeable. Press in the clutch pedal and leave the gear engaged. If the noise changes or disappears, the noise may be amplified by the vibration of the engine (6007).
- Drive under the same condition again. Press the clutch pedal in and shift into neutral. Release the clutch pedal while the vehicle is coasting down the road. Evaluate the noise, as the rear axle assembly (4006) turns the mainshaft.

Additional Testing For 4x4 Trucks (Non-Electronic Shift)

- Check for any noise change when shifting the transfer case (7A195) between 4x2, 4 high, 4 low or into neutral.
- With the vehicle at a complete stop and the transfer case in neutral, shift through all the gears and evaluate noise at different engine rpm. Check for any noises in neutral at different engine rpm.

NOTE: To isolate clutch concerns from transmission concerns, operate the transmission at no-load. On 4x4 models, place the transfer case in neutral. Remove the driveshaft on 4x2 models. Run the engine at 3000 rpm and operate the transmission throughout ranges with the clutch engaged. If hard shifting concern (power to transmission) disappears, the concern may be in the clutch system. An improperly operating clutch can result in hard shifting that is most noticeable in 1st, 2nd, and reverse. The hydraulic release mechanism must work properly. Continued operation with a defective clutch system may result in premature wear or damage of synchronizer (7124).

Hard shifting or difficulty engaging gears may be the result of improper clutch function. Check the release system travel. Minimum travel for the concentric slave cylinder bearing (4.9L and 5.8L engines) and the external system slave cylinder push rod (7.3L and 7.5L engines) is 11 mm (7/16 inch). If system travel is less than 11 mm, this is an indication of problems in the release system such as excessive flexing of the instrument panel (04320), cracked instrument panel reinforcement at the clutch master cylinder mounting and air or water in the hydraulic clutch hose. Refer to Section 08-00.

If the release system travel is greater than 11 mm (7/16 inch), and the clutch is suspected, check for clutch reserve as follows:

1. Set the parking brake control (2780) and put the transmission in neutral.
2. With the clutch pedal fully depressed, shift into reverse, then shift half-way between reverse and neutral to defeat the synchronizer.
3. Allow the clutch pedal to fully return and adjust the position of shift control selector lever and housing to obtain light contact between the gear teeth. A slight grind will occur.
4. Slowly depress the clutch pedal until grinding stops. Measure the clutch pedal travel from this position to the full down position (clutch reserve position).

This clutch reserve dimension should be at least 38 mm (1-1/2 inches). If the reserve is less than 38 mm (1-1/2 inches), and there are no hydraulic control system concerns, remove the transmission and check for excessive clutch wear. On the 7.3L diesel and 7.5L engines, check for contamination of clutch release hub and bearing and binding on the bearing retainer. Replace the clutch assembly or clutch release hub and bearing as required.

Licensed Product Company

DIAGNOSIS AND TESTING (Continued)

NOTE On the 5 8L vehicles, the case (7005) is ribbed in order to reduce gear rattle and gear rollover noises

Symptom Charts

NOISE WHILE STOPPED — TRANSMISSION IN NEUTRAL

Condition	Possible Source	Action
• Noise Present with Clutch Pedal Fully Depressed	• Engine noise • Clutch release hub and bearing failure • Pilot bearing failure • Misaligned transmission	• REFER to appropriate Service Manual section for these areas
• Noise Disappears When Engine Exceeds 1500 rpm Without Depressing Clutch Pedal	• Neutral rollover is caused by the engine firing pulses transmitted through the gear set Some neutral rollover is normal on the 7 5L application The dual mass flywheel on the 7 3L diesel and the two stage clutch on the 4 9L and 5 8L should eliminate this concern on these engines	• CHECK engine idle quality and speed A rough or low idle will aggravate this concern
• Noise Present at Engine Speeds Above Idle	• Insufficient lubrication • Damaged tapered roller or caged needle roller bearing • Scuffed gear tooth contact surfaces	• DRAIN oil (when required) and FILL with the correct oil, conforming to Ford specification ESP-M2C-166H Type "H" or MERCON® • INSPECT for failure Pay special attention to the mainshaft front bearing (pocket bearing), located between the input shaft and mainshaft TURN the gears on the mainshaft to check for failure of needle bearings by feeling for roughness • DISASSEMBLE transmission and check gear tooth contact surfaces REPLACE gears as required
• Noise on PTO-Equipped Transmissions	• Incorrect PTO gear mesh due to Wrong model PTO, incorrect installation, defective PTO	• REMOVE the PTO and INSTALL a cover EVALUATE for noise without PTO • CHECK the mating teeth on countershaft cluster gear and also on the gear of the input shaft for damage If any parts are damaged, REPLACE CONTACT PTO supplier / manufacturer to VERIFY model usage, shimming and PTO quality

Official Licensed Product
Ford Motor Company

NOISE WHILE DRIVING

Condition	Possible Source	Action
• Noise Is Present in All or Several Gears Noise Occurs at High and Low Engine Speeds and May Vary with Engine Speed	• Worn or rough output shaft rear bearing • Needle bearing under mainshaft gears damaged • Wrong preload on main or cluster shaft bearings • PTO installed incorrectly	• DISASSEMBLE transmission and INSTALL new output shaft rear bearing on mainshaft. • REPLACE needle bearing and gear • DISASSEMBLE transmission and CORRECT preload • CHECK PTO installation
• Rattle Noise When Taking Off from a Stop and Driving at Less Than 1000 rpm	• "Lugging Rattle "	• OPERATE truck without "lugging " Condition will not shorten the life of the transmission

DIAGNOSIS AND TESTING (Continued)

NOISE WHILE DRIVING (Continued)

Condition	Possible Source	Action
• Clunking Noise When Shifting or Speeding Up or Slowing Down. Condition Is Worse on Bumpy Surfaces	• Freeplay in the system (clutch through axle and fuel injector shutoff timing). Some clunk is normal with the 4.9L and 5.8L. • Loose yoke nut.	• CHECK for excessive backlash of rear axle assembly. Clunk cannot be corrected by repairing transmission unless a defect is evident. • INSTALL a new spiral lock nut. No staking required. TIGHTEN to 270 N·m (200 lb-ft).
• Noise While Driving in One Gear Increases with Road Speed	• Worn, imperfect or chipped gear teeth on the affected gear.	• REPLACE affected mating gears.
• Whining Noise at High Engine rpm in 3rd and 5th Gear	• Worn input shaft gear and countershaft drive gear.	• CHECK noise level in 4th gear under same engine conditions. If noise level is less, REPLACE the input shaft and countershaft cluster gear. INSPECT and REPLACE other gears as required.
• Shift Lever Buzz Present While Driving, Not Present During a Neutral Engine Run-Up While Parked	• Upper shift control selector lever damaged or loose. • Lower shift control selector lever defective.	• CHANGE shift control selector lever. If buzz is still present, SEE in which gear the buzz occurs. DISASSEMBLE and INSPECT specific gear. CHECK guide pieces for clearance. • REPLACE lower shift lever. Shift lever E9TZ-7210-G is less sensitive to vibration than earlier design.
• Shift Lever Rattle in Neutral Engine Run Up, Primarily Diesel 4x4	• Shift lever may not have plastic bushing at the pivot. • Shift lever boot incorrectly installed.	• CHECK by temporarily removing the shift lever boot. REPLACE if the noise is gone. • Shift lever boot must make air-tight seal to shift lever. REPLACE shift lever boot if stretched or sealing surface is damaged.
• Moan or Vibration on F-Super Duty at Road Speeds Greater Than 50 mph	• Aftermarket modifications to frame or driveshaft.	• INSPECT non-factory driveshafts for: — 0 to 51 inches long — 3 inch diameter tube is OK. — Up to 55 inches long — 3-1/2 inch diameter tube is required. — Up to 59 inches long — 4 inch diameter tube is required. — Working angles greater than 1/2 degree but less than 3 degrees. — System balanced to within 0.4 oz. at the ends and 0.8 oz. at the driveshaft center bearing bracket.
• Hard Shift (Particularly 1st, 2nd and Reverse)	• Clutch not releasing completely. • Operator not fully depressing clutch pedal. • Flexing of instrument panel. • Hydraulic clutch hose routed too close to exhaust manifold. • Air/water in hydraulic clutch hose. • Insufficient reserve of synchronizer (a defective clutch system can result in premature loss of synchronizer reserve).	• REFER to Section 08-00 in this manual. • INTERVIEW operator. • SERVICE Instrument panel. • MOVE or SHIELD hydraulic clutch hose. • BLEED clutch system. • REPLACE complete synchronizer and corresponding gear, if required.

Official Licensed Product
Ford Motor Company

DIAGNOSIS AND TESTING (Continued)

SHIFT CONCERNS

Condition	Possible Source	Action
• Notchy Shifting	• Some notchiness is normal (especially in 3rd gear)	• For excessive notchiness, REPLACE with revised synchronizers 1/2 F6TZ-7124-B 3/4 F6TZ-7124-C 5/R F6TZ-7124-A
• Grinding Noise During Shifting	• Synchronizer cone too smooth (after a few thousand miles)	• MAKE 3 to 5 hard shifts with high engine rpm If noise is still present, DISASSEMBLE and CHECK for damage (darkened patches OK) REFER to Synchronizers in the Cleaning and Inspection portion of this section
	• Synchronizer ring defective • Insufficient wear limit of synchronizer ring	• CHANGE synchronizer • CHANGE synchronizer
• Walking or Jumping Out on Rough Roads	• Interference or resistance in the mechanism preventing full engagement of the sliding collar	• REMOVE and DISASSEMBLE transmission and CHECK profile of internal grooves in the sliding sleeve
	• If sliding collar has been shifted completely into position, some other malfunction could move sliding collar and shift lever out of its proper location	• CHECK for shift lever interference The stub lever, gear shift finger or shift forks could be worn REMOVE transmission and REPLACE damaged parts
• Walks Out of Gear Under Drive or on a Coast Load	• Worn or loose engine mounts • Shift fork pads or groove in sliding collar worn excessively	• CHECK engine mounts • REMOVE and DISASSEMBLE transmission and REPLACE damaged parts
	• Transmission and engine out of alignment either vertically or horizontally	• VERIFY transmission is tightly bolted to the engine
• Walk or Jump Out on Rough Roads	• Use of heavy shift lever extensions	• USE original equipment shift lever INSTALL heavy duty shift rail detent springs (E8TZ-7E218-A)
	• Shifter interlock springs broken or missing	• REMOVE detent spring plug on detent and REPLACE shifter interlock springs
	• Detent spring plug not pressed in properly	• REPLACE with new detent spring plug and PRESS in 1 mm (3/64 inch)
	• No preload in drive gear, mainshaft or countershaft cluster gear, caused by worn bearings	• REMOVE and DISASSEMBLE transmission and REPLACE defective bearings (necessary to reset bearing preload)
	• Grated selector teeth	• CHANGE synchronizer and gear
• Excessive Shift Lever Movement in 3rd Gear	• 3-4 synchronizer body snap ring not seated in groove on output and fifth gear driveshaft	• DISASSEMBLE and REPLACE affected parts, paying special attention to 3-4 synchronizer, input gear, input shaft pocket bearing and shift fork
• Gear Cannot Be Engaged	• Clutch not releasing (see hard shift)	• CHECK clutch per procedure in Section 08-00
	• Gear selector interlock sleeve jammed in transmission	• If bent or damaged, REPLACE the gear selector interlock sleeve
	• Damage to teeth on sliding collar or improper installation (dog teeth worn)	• REPLACE or CORRECT synchronizer CHECK for damage on the corresponding mainshaft gear in clutch teeth area REPLACE as required
	• Jammed pressure pieces in synchronizer	• REMOVE and DISASSEMBLE transmission and REPLACE pressure pieces
	• Shift rails out of proper position	• REPLACE all shift rails, detents and gear selector interlock sleeve

Official Ford Product Ford Motor Company

DIAGNOSIS AND TESTING (Continued)

SHIFT CONCERNS (Continued)

Condition	Possible Source	Action
• Sticking in Gear	• Clutch not releasing (see hard shift above) • Gear selector interlock sleeve jammed in transmission • Sliding collar tight on splines (dog teeth damaged)	• CHECK clutch per procedure in Section 08-00 • If bent or damaged, REPLACE the gear selector interlock sleeve • REMOVE and DISASSEMBLE transmission
• Stuck in Gear	• Shift rails out of proper position	• REPLACE all shift rails, detents and gear selector interlock sleeve
• High Shift Efforts	• Lack of lubricant or wrong lubricant used, causing build-up of sticky and sludgy deposits on splines of sliding collar • Case bushing rough, or dragging • Clutch not releasing (see hard shift above) • Damaged input shaft pocket bearing	• INSPECT through the PTO openings If sludge is present, REMOVE and CLEAN the transmission • PLACE transmission in 4th gear and ROTATE the mainshaft by hand while the clutch is depressed If a roughness is felt, REMOVE the case bushing, INSPECT and REPLACE the bearing and input shaft, if required (input bearing preload must be RESET if input shaft is replaced) • INSTALL a new input shaft and input shaft pocket bearing (necessary to reset bearing preload)
• High Shift Effort in One Gear Only	• Sliding sleeve tight on splines • Synchronizer teeth chipped or badly mutilated • Binding or interference of shift lever with other objects or rods inside the cab • Mainshaft gears seized or galled on either the thrust face or diameters • Synchronizer (wear limit too low, fractures) • Synchronizer cone smoothness	• REMOVE transmission and REPLACE affected synchronizer • REMOVE and DISASSEMBLE transmission and REPLACE damaged parts • CHECK shift operation in cab • REMOVE and DISASSEMBLE transmission, REPLACE synchronizer and other affected parts • REMOVE and DISASSEMBLE transmission, REPLACE synchronizer and other affected parts • MAKE 3 to 5 hard shifts with high engine rpm
• High Shift Efforts in Cold Weather, All Gears	• Incorrect, high-viscosity fluid	• INSTALL Type H or MERCON® fluid ROAD TEST the vehicle to IDENTIFY possible damage caused by the wrong fluid Synthetic Motorcraft MERCON® ATF XT-2-QDX or MERCON® equivalent will improve cold weather shiftability

Ford Motor Company

DIAGNOSIS AND TESTING (Continued)

LEAK CONCERNS

Condition	Possible Source	Action
• Leak at Case Cover	• Reused or damaged case cover gasket.	• REPLACE with new case cover gasket. Anaerobic Sealant E3AZ-19554-AA meeting Ford specification WSK-M2GA9 can be used with the new gasket.
• Leak at Case Plug	• Sealing ring missing from case plugs (transmissions with an E9TA prefix or later have a sealing surface machined on the housing). • Transmissions with an F4TA prefix have a sealing ring on the plug with rubber centering feature for improved sealing.	• INSTALL a new sealing ring. • INSTALL a new sealing ring.
• Leak at Transfer Case Cover	• Bolts loose or damaged transmission case deflector gasket.	• REPLACE transmission case deflector gasket. TIGHTEN bolts to 38 N·m (28 lb-ft).
• Leak at Detent Spring Plug	• Reused or damaged detent spring plugs.	• USE new detent spring plugs when reassembling. Do not DEFORM case around detent spring plug to retain.
• Leak at Large Welch Plug Inside Flywheel Housing, Cracks Around the Hole	• Improper assembly.	• RESEAL using Gasket Maker E2AZ-19562-B or equivalent meeting Ford specification WSK-M2G348-A5. If cracked, REPLACE flywheel housing.
• Leak at Input Shaft Bearing Oil Passage Plug (Inside Flywheel Housing with 7.5L and 7.3L Engine and on Left Side with 4.9L and 5.8L Engine)	• Improper assembly.	• RESEAL using Gasket Maker E2AZ-19562-B or equivalent meeting Ford specification WSK-M2G348-A5. If cracked, REPLACE flywheel housing.
• Leak at Output Shaft Oil Seal	• Output yoke nut loose or improperly staked (4x2, except F-Super Duty).	• REPLACE seal using new lock nut. TIGHTEN to 270 N·m (200 lb-ft). **CAUTION: Do not reuse lock nut.**
• Leak at Input Oil Seal	• Improper assembly. Seal lip may have rolled during assembly, garter spring may have become dislodged during a previous repair.	• REPLACE input oil seal, using extreme caution that input shaft does not contact the oil seal during reassembly (if the seal lip is rolled, leaking may not occur for several hundred miles).
• Leak Between Quill Pipe and Flywheel Housing (7.3L and 7.5L Engines Only)	• Damaged O-ring during assembly.	• REMOVE quill pipe, INSPECT sealing surfaces and REPLACE O-ring. LUBRICATE O-ring prior to assembly to PREVENT damage.
• Leak at Case Joint	• Damaged mating surfaces or assembly error.	• SERVICE or REPLACE damaged case. RESEAL with Gasket Maker E2AZ-19562-B or equivalent meeting Ford specification WSK-M2G348-A5. TIGHTEN bolt to 23 N·m (17 lb-ft).

Official Licensed Product Ford Motor Company

DIAGNOSIS AND TESTING (Continued)

MISCELLANEOUS CONCERNS

Condition	Possible Source	Action
• Cracked Flywheel Housing	• Drivetrain vibration caused by assembly error • Vehicle modification (drive shaft lengthened or shortened)	• CHECK the integrity of driveshaft attachment • Non-factory driveshafts should be inspected for — 0 to 51 inches long — 3 inch diameter tube is OK — Up to 55 inches long — 3-1/2 inch diameter tube is required — Up to 59 inches long — 4 inch diameter tube is required — Working angles greater than 1/2 degree but less than 3 degrees — System balanced at 3000 rpm to within 0.4 in./oz. at the ends and 0.8 in./oz. at the center support
• Cracked Rear Engine Mount Transmission Attachment Ears	• Broken front engine mounts • Vibration caused by a driveline imbalance • Rear mount upper flange not flat	• INSPECT and REPLACE front engine mounts if required • SEE above • REPLACE rear mount

Official Licensed Product
Ford Motor Company

DIAGNOSIS AND TESTING (Continued)

BEARING FAILURE

Condition	Possible Source	Action
• Worn or Damaged Bearings NOTE: The service life of most transmissions is governed by the life of the bearings. The majority of bearing failures can be related to driveline vibration or contamination of the fluid. Additional reasons for bearing failures are:	• Extended start-up idle in extreme cold may lead to wear of input shaft pocket bearing.	• Synthetic Motorcraft MERCON® ATF XT-2-QDX or MERCON® equivalent provides improved lubrication when transmission temperatures remain below -29°C (-20°F) for extended periods. Synthetic MERCON® is required in vehicles equipped with 7.3L diesel engine.
	• Any combination of operation at or above GVW in high ambient temperatures, on steep grades, or vehicles with high frontal areas (exceeding 60 square feet) can affect all bearings due to temperature buildup.	• Heat buildup may cause break down of the ATF. Synthetic MERCON® can withstand higher operating temperatures.
	• Input shaft pocket bearing not lubricated due to missing, damaged or misinstalled front bearing oil scoop ring.	• REPLACE damaged components and VERIFY proper installation of front bearing oil scoop ring. CHECK for proper installation of the snap ring, which retains the 3-4 synchronizer, on the mainshaft next to the front bearing oil scoop ring.
	• Damage due to towing a vehicle greater than 80 km (50 miles) or at speeds exceeding 56 km/h (35 mph) with the driveshaft installed. Gear bearings are especially susceptible to damage.	• PROVIDE correct towing procedures to tow operator.
	• Vibration break-up of retainer and brinelling of races-fretting corrosion.	• REFER to restrictions of mainshaft in the Miscellaneous Concerns portion of this symptom chart.
	• Incorrect preload causes faster wearing of the bearings, due to incomplete contact area.	• Be sure to FOLLOW the appropriate bearing preload setting procedure in the Adjustments portion of this section.
	• Lack of lubricant or wrong type.	• CHECK for leaks and REPAIR as required. REPLACE with correct fluid.
	• Acid etch of bearing due to water in lube.	• IDENTIFY and CORRECT source of water entry.
	• Worn out due to other part failure.	• REMOVE, DISASSEMBLE and CLEAN the transmission, then REPLACE damaged parts (necessary to reset bearing preload if any bearings are replaced).

Official Product Ford Motor Company

REMOVAL

Transmission (4x2)

Model S5-47 ZF, Disassembled View

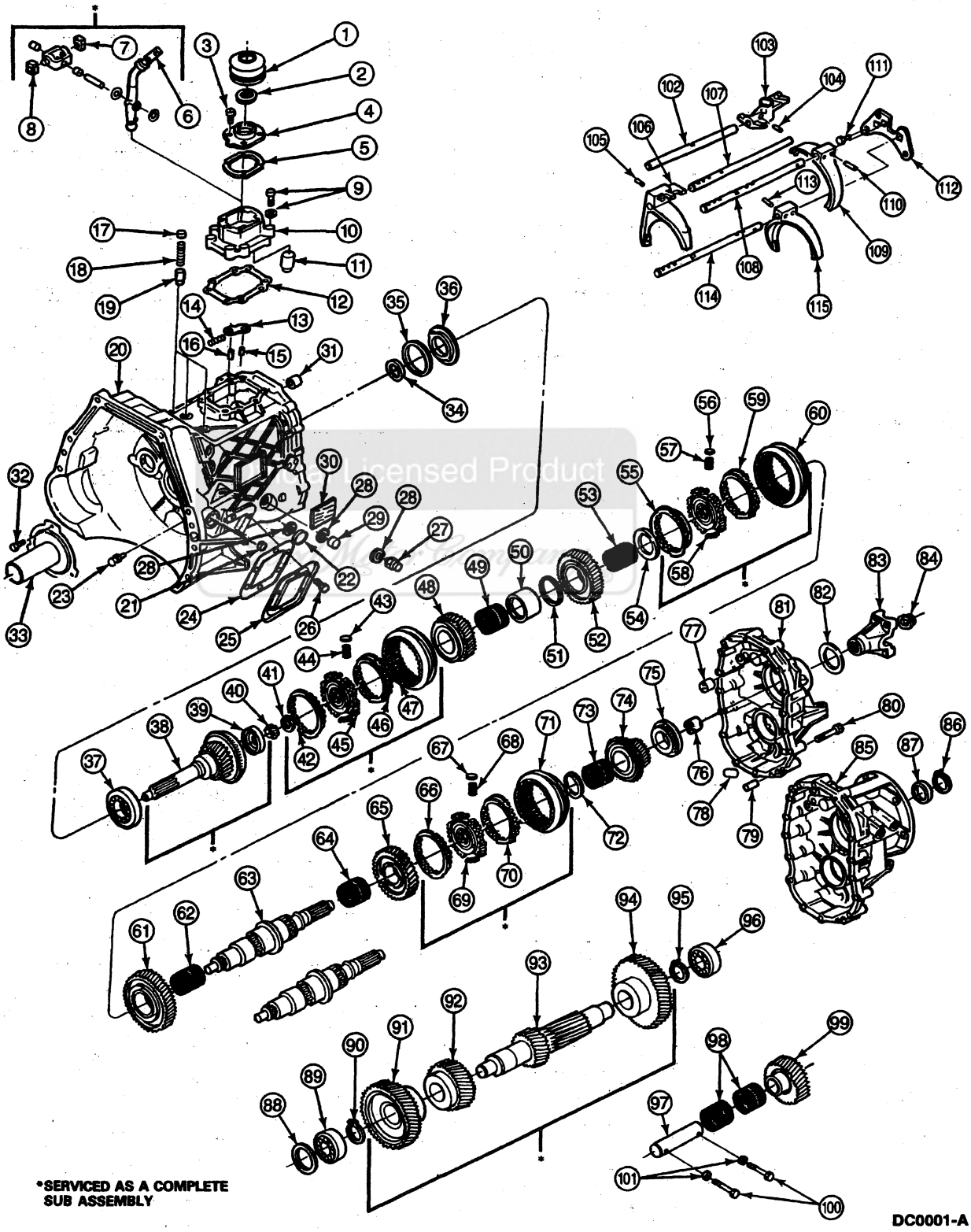

REMOVAL (Continued)

Item	Part Number	Description
1	7277	Gearshift Lever Boot
2	7D152	Snap Ring
3	N603264	Capscrew
4	7262	Gearshift Lever Boot Retainer
5	7207	Gasket
6	7210	Shift Lever
7	7C371	Guide Piece
8	7C371	Guide Piece
9	7C015	Hex Bolts and Washers
10	7203	Shift Lever Housing
11	7E218	Shift Detent Plunger Assy
12	7185	Gasket
13	7F194	5th-Reverse Interlock
14	7234	Shifter Interlock Spring
15	7B096	Interlock Roll Pin
16	7B096	Interlock Roll Pin
17	7L013	Detent Spring Plug
18	7N120	Spring
19	7247	Shift Rail Detent Plunger
20	7005	Case
21	7L018	Case Plug
22	7A010	Case Plug
23	7B602	Clutch Release Lever Stud
24	7166	Transmission Case PTO Gasket
25	7165	PTO Cover
26	304650	Bolt
27	15520	Backup Lamp Switch
28	7L101	Sealing Ring
29	7A010	Case Plug
30	—	ID Plate (Part of 7003)
31	7D362	Central Shift Rail Bearing
32	7A443	Bolt (3)
33	7050	Main Drive Gear Bearing Retainer
34	7052	Oil Seal
35	7029	Input Bearing Front Shim
36	7040	Oil Baffle
37	7025	Case Bearing
38	7017	Input Shaft
39	7046	Front Bearing Oil Scoop Ring
40	7120	Input Shaft Pocket Bearing
41	7B331	Small Parts Repair Kit
42	—	Gear Synchronizer Ring (Part of 7124)
43	7124	Pressure Piece
44	—	Spring (Part of 7B331)

(Continued)

Item	Part Number	Description
45	—	3rd-4th Synchronizer Body (Part of 7124)
46	—	3rd Gear Synchronizer Ring (Part of 7124)
47	—	3rd-4th Sliding Sleeve (Part of 7124)
48	7186	3rd Gear
49	7133	Caged Needle Roller Bearing
50	7173	3rd Speed Bearing Spacer
51	7114	Thrust Washer
52	7103	2nd Gear
53	7133	2nd Speed Gear Bearing
54	7B331	Small Parts Repair Kit
55	7124	2nd Gear Synchronizer Ring
56	7124	Pressure Piece
57	7124	Spring
58	7124	1st-2nd Synchronizer Body
59	7124	1st Gear Synchronizer Ring
60	7124	1st-2nd Sliding Sleeve
61	7100	First Gear
62	7127	Gear Bearing
63	7061	Mainshaft
64	7127	Reverse Gear Bearing
65	7142	Reverse Gear
66	7124	Reverse Gear Synchronizer Ring
67	7124	Pressure Piece
68	7124	Spring
69	7124	5th-Reverse Synchronizer Body
70	7124	5th-Gear Synchronizer Ring
71	7124	5th-Reverse Sliding Sleeve
72	7B331	Small Parts Repair Kit
73	7121	5th Gear Bearing
74	7158	5th Gear
75	7R205	Output Shaft Rear Bearing
76	7072	Spacer
77	7D362	Central Shift Rail Bearing
78	7E290	Magnet
79	—	Dowel (Part of 7003)
80	7A443	Bolt
81	7A039	Extension Housing (4 x 2)
82	7052	Oil Seal
83	7089	Output Yoke (4 x 2)
84	7045	Output Yoke Lock Nut (4 x 2)
85	7A039	Extension Housing (4 x 4)
86	7B331	Small Parts Repair Kit
87	7052	Oil Seal

(Continued)

Official Licensed Product
Ford Motor Company

REMOVAL (Continued)

Item	Part Number	Description
88	7119	Thrust Washer
89	7065	Output Shaft Bearing
90	7064	Output Shaft Snap Ring
91	7113	Countershaft Drive Gear
92	7113	Countershaft 3rd Gear
93	7113	Countershaft Cluster Gear
94	7113	Countershaft 5th Gear
95	7064	Output Shaft Snap Ring
96	7065	Output Shaft Bearing
97	7140	Reverse Idler Gear Shaft
98	7E139	Reverse Idler Gear Bearing
99	7141	Reverse Idler Gear
100	7214	Reverse Idler Gear Shaft Bolt
101	7K267	Sealing Ring

(Continued)

Item	Part Number	Description
102	7240	Main Shift Rail
103	7243	Shift Finger
104	7B096	Roll Pin
105	7B096	Roll Pin
106	7230	3-4 Shifter Fork
107	7241	3-4 Reverse Shift Rail
108	7242	5-Rev Shift Rail
109	7231	5-Rev Shift Fork
110	7B096	Roll Pin
111	7A443	Bolt (3)
112	7K201	Gear Selector Interlock Plate
113	7B096	Roll Pin
114	7358	1-2 Shift Rail
115	7239	1-2 Shift Fork

1. Shift the transmission (7003) into neutral.
2. Remove the four screws and remove the shift lever boot and shift lever boot retainer from the shift lever housing.
3. Remove the two bolts and remove the upper shift lever and housing from the lower shift lever and housing.
4. **CAUTION: Remove lower shift lever and housing from the vehicle to prevent getting transmission fluid on the front floor mat or floor carpet.**

   Remove the four Allen-head capscrews from the shift lever housing and remove the entire shifter assembly from the top of the transmission.

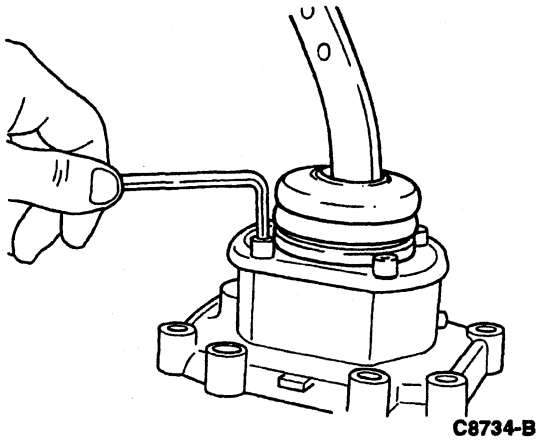

C8734-B

5. Raise the vehicle on a hoist and position safety stands under the vehicle.
6. On diesel engines, remove bolt retaining engine charge exhaust pipe to transmission housing.
7. Disconnect the backup lamp switch (15520) located at the top left hand side of the transmission.
8. If the transmission is to be disassembled, remove the case plug (7A010) and drain the oil from the transmission.
9. Position Rotunda Low Lift Transmission Jack 164-R3506 or equivalent under the transmission. Secure the transmission to the jack stand.
10. Remove the driveshaft (4602) from the vehicle. Disconnect the clutch slave cylinder from the transmission. Refer to Section 05-01 and Section 08-02. Keep transmission in upright position to avoid fluid leakage.
11. On F-Super Duty series vehicles remove the transmission parking brake from the transmission. Refer to Section 06-05 in the Body, Chassis manual. Keep parking brake in upright position to avoid fluid leakage.
12. Remove the transmission rear insulator and lower retainer as described in Section 02-03. Remove the transmission support crossmember (6A023).
13. Remove the bolts that retain the transmission to the engine (6007).
14. Move the transmission to the rear until the input shaft (7017) clears the flywheel (6375). Lower the transmission from the vehicle. Keep transmission in upright position to avoid fluid leakage.

Ford Motor Company Unlicensed Product

REMOVAL (Continued)

Transmission (4x4)

1 Shift the transmission (7003) into neutral

2 Remove the four screws and remove the boot and bezel assembly from the transmission opening cover

3 **CAUTION: Remove lower shift lever from the vehicle to prevent getting transmission fluid on the floor mat or carpet**

Remove the four Allen-head capscrews from the shift tower cover and remove the entire shifter assembly from the top of the transmission

4 NOTE The following step applies to 7 3L diesel engine vehicles only

Loosen marman clamp at wastegate housing exhaust outlet

5 Raise the vehicle on a hoist and position safety stands under vehicle

6 NOTE Steps 6 and 7 apply to 7 3L diesel engine vehicles only

Remove nuts retaining exhaust extension pipe to muffler and pipe assembly

7 Remove engine charge exhaust pipe and extension pipe

8 If transmission is to be disassembled, remove the drain plugs and drain the transmission and transfer case (7A195)

9 Remove the rear driveshaft (4602) from the vehicle Refer to Section 05-01

10 Remove the front driveshaft from the vehicle Refer to Section 05-01

11 Disconnect the backup lamp switch (15520)

12 Disconnect the clutch linkage from the transmission

13 If equipped, remove the skid pan from beneath the transfer case

14 Remove the transfer case according to the procedure outlined in Section 07-07A, Section 07-07B or Section 07-07C

15 Position Rotunda Low Lift Transmission Jack 164-R3506 or equivalent, under transmission Remove the transmission rear insulator and lower retainer Refer to Section 02-03 Remove the crossmember Refer to Section 02-01

16 Remove the bolts that retain the transmission to the engine block

17 Move the transmission to the rear until the input shaft clears the engine flywheel housing Lower the transmission from the vehicle

Official Licensed Product
Ford Motor Company

REMOVAL (Continued)

Transmission

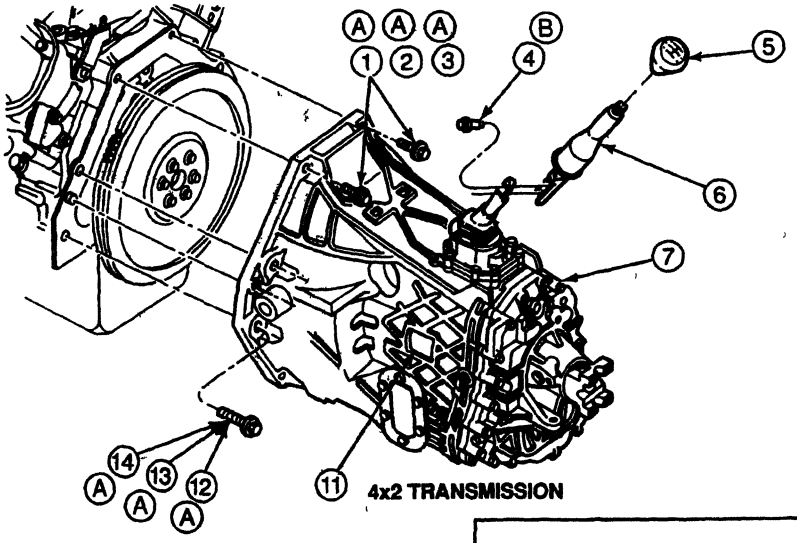

4x2 TRANSMISSION

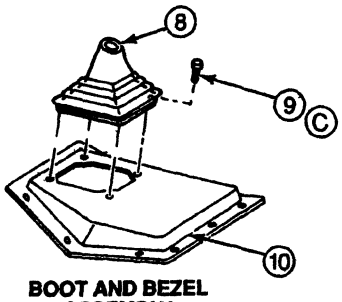

BOOT AND BEZEL ASSEMBLY

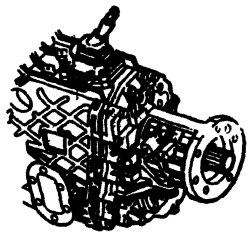

4X4 TRANSMISSION SAME AS 4X2 TRANSMISSION EXCEPT AS SHOWN

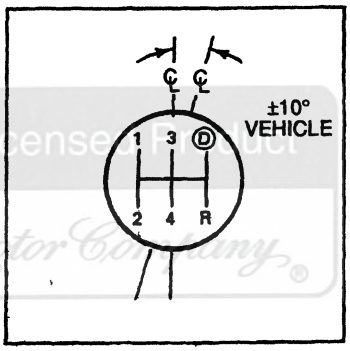

C11502-D

Item	Part Number	Description
1	385739	Bolt, 7/16-14 x 1 62, 5 8L
2	57661	Bolt, 7/16-14 x 1 5, 7 5L
3	N808234	Bolt, M12-1 75 x 70, 7 3L
4	N801010-S101	Bolt
5	7213	Shift Lever Knob
6	7210	Shift Lever
7	7003	Transmission
8	7277	Shift Lever Boot
9	N610959	Bolt
10	12110	Transmission Floor Cover Plate

(Continued)

Item	Part Number	Description
11	—	Transmission I D Plate (Part of 7003)
12	57664	Bolt, 7/16-14 x 2 25, 5 8L
13	57666	Bolt, 7/16-14 x 2 75, 7 5L
14	N808235	Bolt, M12-1 75 x 110, 7 3L
A	—	Tighten to 53-72 N·m (39-53 Lb-Ft)
B	—	Tighten to 22-33 N·m (16-24 Lb-Ft)
C	—	Tighten to 5-9 N·m (44-80 Lb-In)

Front Seal

SPECIAL SERVICE TOOL(S) REQUIRED

Description	Tool Number
Input Shaft Seal Replacer	T95T-7025-A

REMOVAL (Continued)

NOTE: The through-bore of oil seal is designed such that the oil seal can be removed without having to disassemble the transmission (7003) if removal and replacement of oil seal is all that is required.

Removal

1. For 7.3L and 7.5L engine applications, remove the three release bearing guide tube retaining screws. Remove guide tube.
2. Tap on the oil seal with a screwdriver until the oil seal turns. Then use a screwdriver to pry out the seal.

Installation

1. Insert new oil seal over input shaft and drive it flush with the case using Input Shaft Seal Replacer T95T-7025-A.
2. For 7.3L and 7.5L engine applications, insert guide tube over input shaft. Insert and tighten three bolts (7A443) to 24 N·m (18 lb-ft).

Rear Seal, 4x2 Transmissions (Except F-Super Duty)

SPECIAL SERVICE TOOL(S) REQUIRED

Description	Tool Number
Companion Flange Holding Tool	T78P-4851-A
Locknut Socket	T87T-7025-AH
Rear Seal Remover	T87T-7025-CH
TOD Forcing Screw	T84T-7025-B

Removal

1. Disconnect the driveshaft (4602) from the output flange. Refer to Section 05-01.
2. Attach Companion Flange Holding Tool T78P-4851-A to the transmission output flange with four hex bolts.
3. Loosen the hex nut that holds the output flange to the mainshaft with Locknut Socket T87T-7025-AH. Remove the flange holding tool after loosening the nut.
4. Remove the output flange from the mainshaft.
5. Insert Rear Seal Remover T87T-7025-CH over output end of mainshaft and tighten into oil seal (7052).
6. Assemble TOD Forcing Screw T84T-7025-B into seal remover. Turn forcing screw while holding seal remover to pull oil seal.

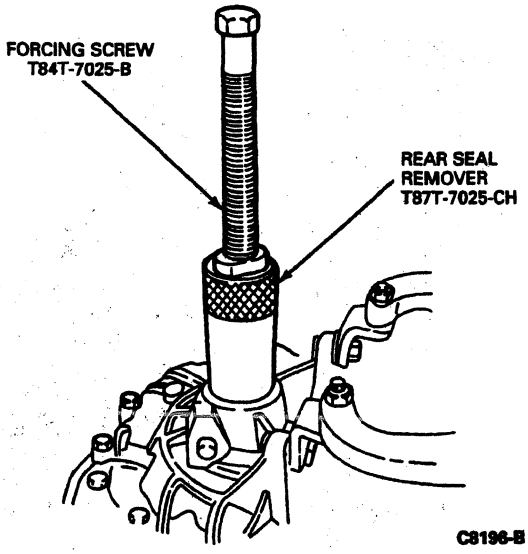

Rear Seal, 4x4 and F-Super Duty Series Transmissions

Removal and installation is the same as for the 4x2 with the additional steps of removing and installing the transfer case. Refer to the appropriate section in this manual.

On F-Super Duty series vehicles, remove the transmission-mounted parking brake as described in Section 06-05 in the Body, Chassis Manual.

Shift Lever and Boot

1. Slide the two guide pieces off the cardan joint.

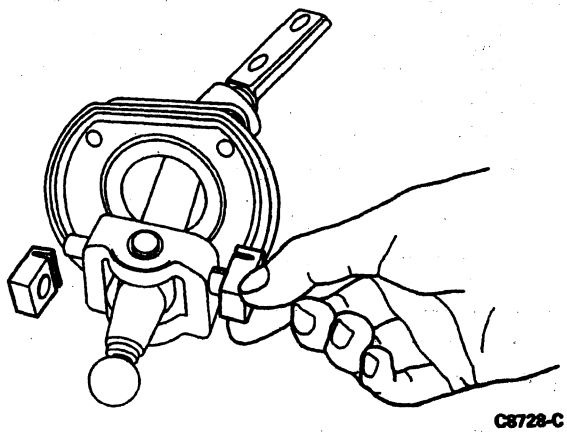

REMOVAL (Continued)

2. Slide the shift lever boot and shift lever boot retainer as an assembly off past the top of the shift lever.

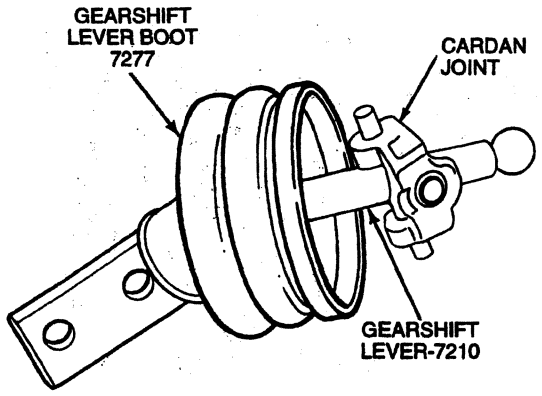

C9021-D

3. NOTE: A cross-shaft passes through the cardan joint and is pressed into the shift lever. Do not disassemble these components.

   Invert the shift lever boot and shift lever boot retainer and remove the snap ring.

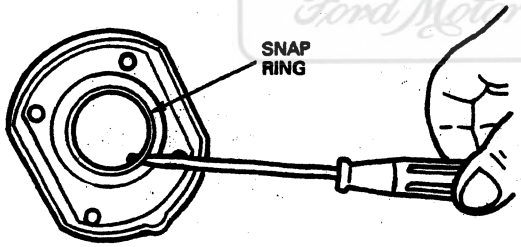

C8730-B

DISASSEMBLY

Transmission

SPECIAL SERVICE TOOL(S) REQUIRED

Description	Tool Number
Bench Mounted Holding Fixture	T57L-500-B
Companion Flange Holding Tool	T78P-4851-A

(Continued)

SPECIAL SERVICE TOOL(S) REQUIRED (Cont'd)

Description	Tool Number
Locknut Socket	T87T-7025-AH
Jet Plug Remover	T77L-9533-B
Gear Pack Holding Fixture	T87T-7025-HH
Shift Rod Support	T87T-7025-JH

1. NOTE: For 4x4 and F-Super Duty vehicles, start with Step 4.

   Attach the transmission (7003) to the Bench Mounted Holding Fixture T57L-500-B. Place the transmission in a vertical position with the case (7005) pointing downward.

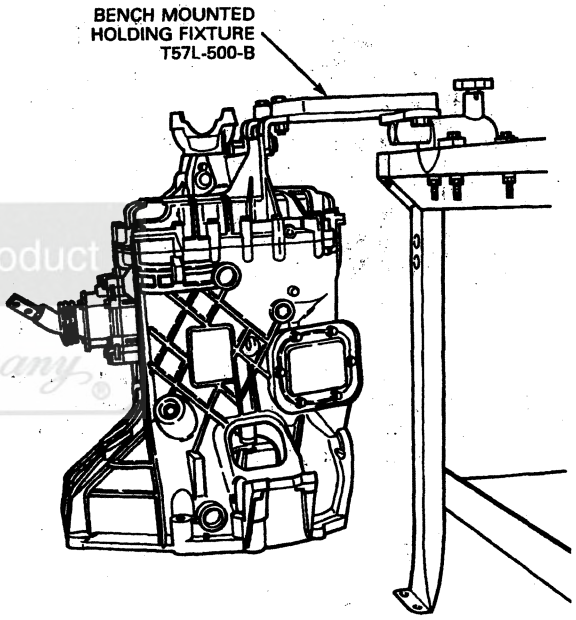

C8676-B

2. Attach Companion Flange Holding Tool T78P-4851-A to the transmission output flange.

Unlicensed Product
Ford Motor Company

DISASSEMBLY (Continued)

3. **CAUTION: Do not remove the hex nut or output flange at this time.**

   Loosen the spiral lock yoke nut that holds the output flange to the mainshaft with Locknut Socket T87T-7025-AH. Remove the flange holding tool after loosening the nut.

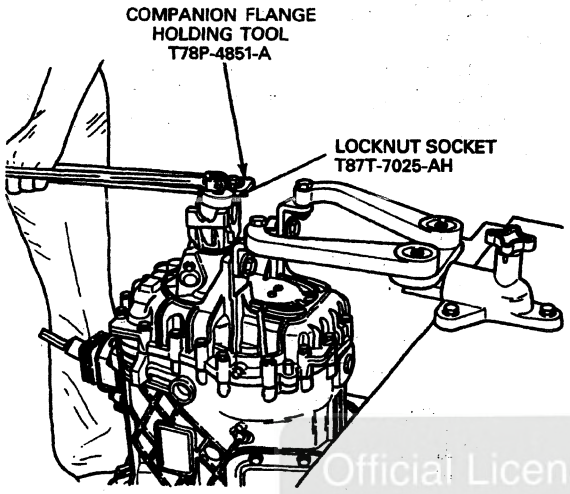

C8678-C

4. Remove 15 of the 17 8 mm hex-head screws that hold the case and extension housing (7A039) together. Leave two screws at opposite sides of the extension housing installed.

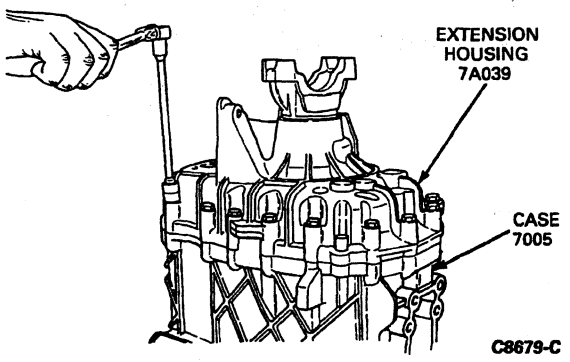

C8679-C

5. Remove any power take-off equipment installed on the transmission.
6. **CAUTION: Make sure that parts do not inadvertently fall into transmission when rotating.**

   Remove the eight 8 mm hex bolts that attach the shift housing to the case. Remove the complete shift lever and shift lever housing as an assembly. Rotate transmission on holding fixture so that the case is pointing upward.

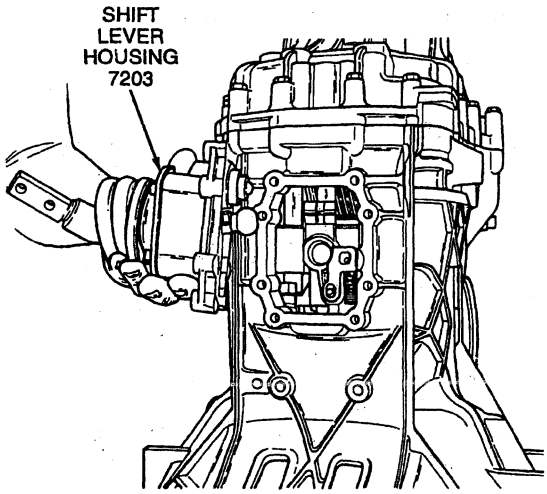

C8680-C

7. Remove the gear selector interlock sleeve (7K201) and shifter interlock spring (7234) which serves as a reverse gear interlock.

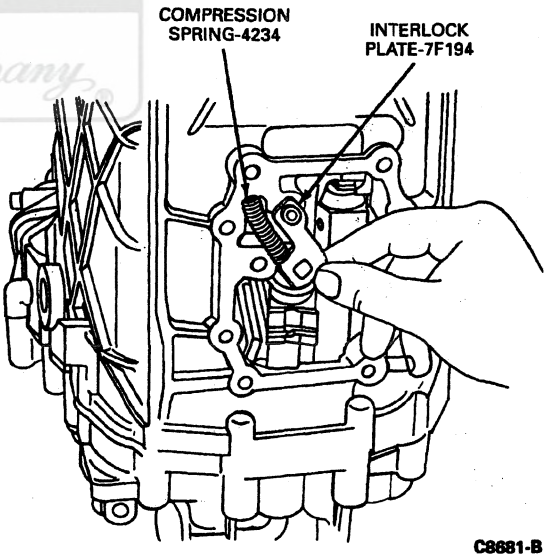

C8681-B

Official Licensed Product
Ford Motor Company

DISASSEMBLY (Continued)

8. **WARNING: DETENT SPRING PLUG IS UNDER SPRING PRESSURE. ALWAYS WEAR PROTECTIVE EYEGLASSES WHEN PERFORMING THIS PROCEDURE TO MAKE SURE THAT DETENT SPRING PLUG DOES NOT STRIKE EYES WHEN IT IS FORCED OUT BY SPRING PRESSURE.**

   NOTE: Discard removed detent spring plugs and replace with new detent spring plugs.

   NOTE: The latest detent spring plugs are of a larger diameter than on older vehicles and will not work on older vehicles.

   Puncture the center of the detent plug and screw in Jet Plug Remover T77L-9533-B and use its slide hammer to remove plug. Repeat this procedure for the other two detent spring plugs in the case.

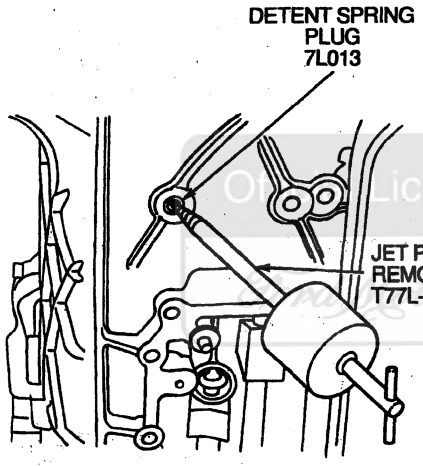

C8682-C

9. Remove the springs that are now protruding from the holes.

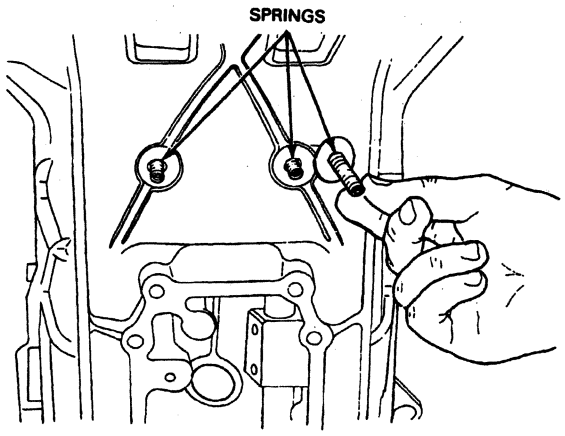

C8683-1A

10. Remove the reverse idler gear shaft bolts.

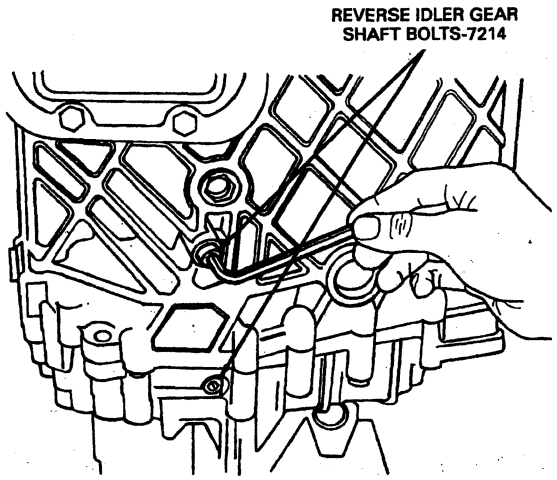

C8684-B

11. If required, remove the backup lamp switch (15520), located above and slightly forward of the transmission ID plate. Remove the sealing ring.

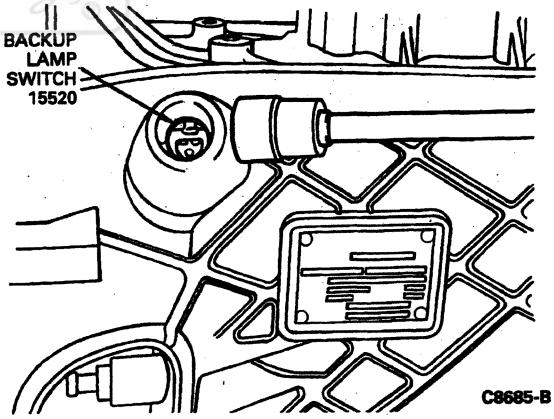

C8685-B

12. NOTE: The mainshaft is facing upward during this operation.

    Use a suitable punch to remove the two dowel pins located in opposite corners of the mating surfaces of extension housing and case. Drive them out toward the rear of the transmission.

DISASSEMBLY (Continued)

13. Remove the two remaining hex bolts from the extension housing.

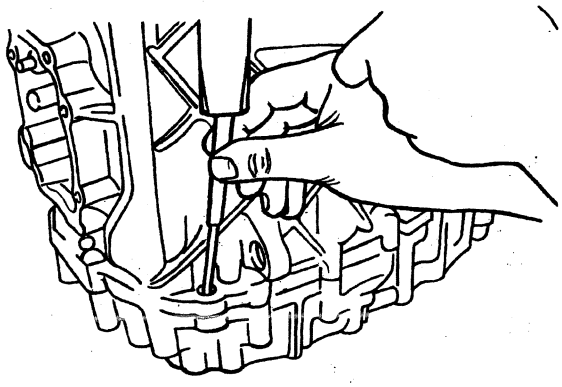

C8687-C

14. **CAUTION: The mating surfaces of case and extension housing are coated with an adhesive sealing agent. If it is difficult to separate case and extension housing because of this adhesive, carefully tap the front of the case with a soft hammer until the bond is loosened. Never use a prying device, such as a screwdriver or chisel, to force case and extension housing apart. This could damage the surfaces and cause leaks.**

Carefully lift the case off the extension housing. It may be necessary to push the main gear shift rail inwards to prevent it from hanging up on the case as it is being removed. Use care to make sure that the main gear shift rail is not lifted off together with the case. Refer to Case in the Disassembly and Assembly of Subassemblies portion of this section for case disassembly and assembly procedures.

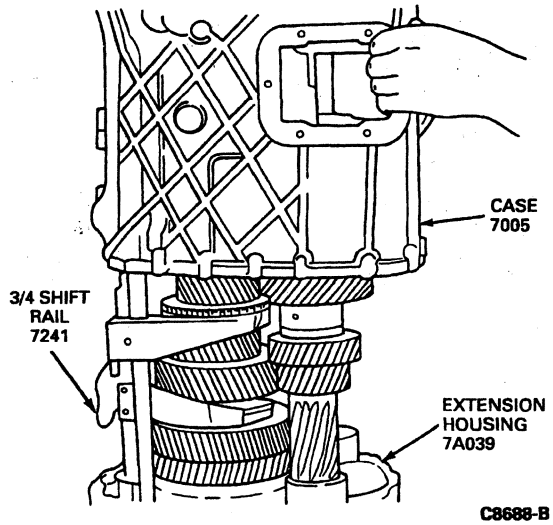

C8688-B

15. Remove the main gear shift rail and and shift finger.

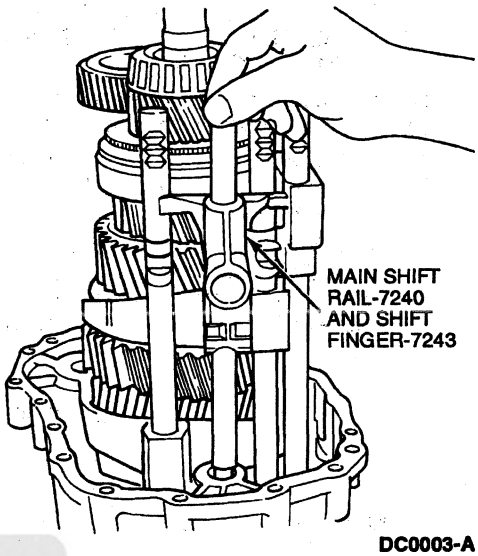

DC0003-A

16. Lift the reverse idler gear shaft (7140) out of the reverse idler gear, and remove the reverse idler gear and two reverse idler gear bearings from the case.

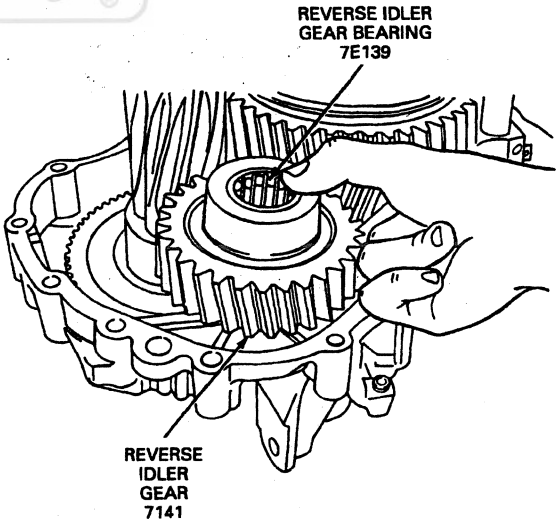

C8691-B

DISASSEMBLY (Continued)

17. Remove the three selector plate bolts that retain the gear selector interlock sleeve to the extension housing.

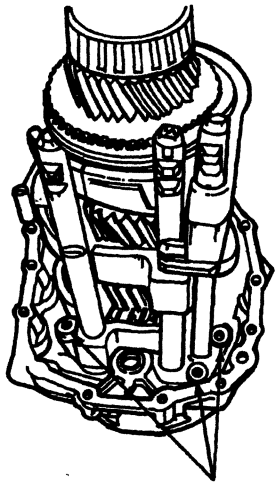

18. With the transmission in a vertical position, use Endless Lifting Sling D87L-1000-A or equivalent to strap Gear Pack Holding Fixture T87T-7025-HH to the mainshaft and countershaft cluster gear (7113). Pass the sling over the shift rails.

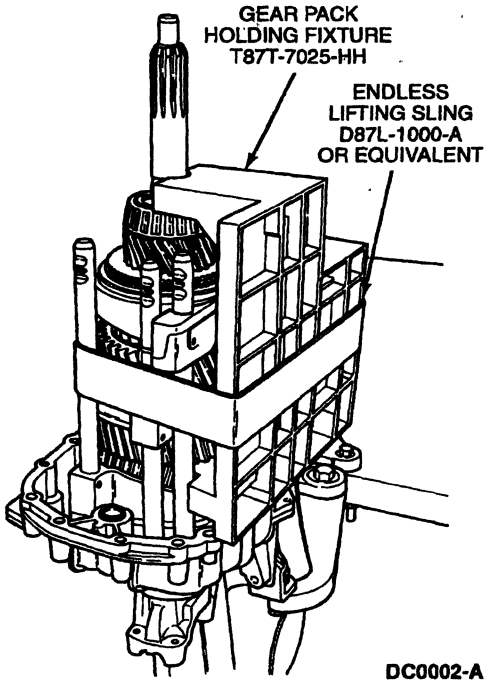

19. Place the Shift Rod Support T87T-7025-JH over the ends of the shift rails.

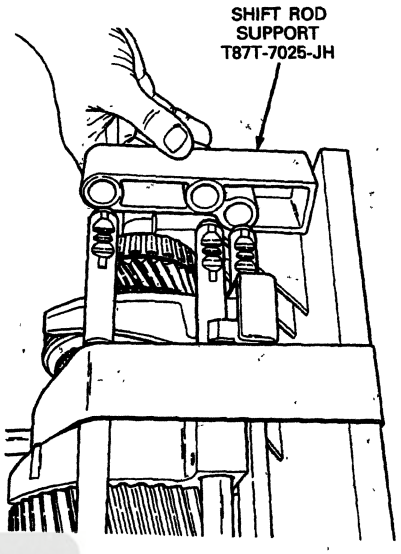

20. Carefully rotate the transmission, together with the gear pack holding fixture, into a horizontal position with the holding fixture beneath the gear pack.

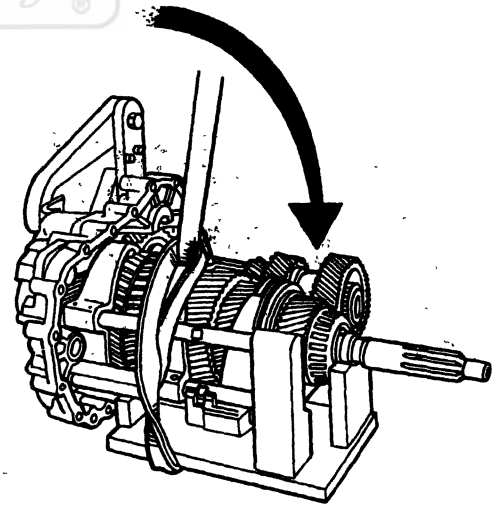

Official Licensed Product

DISASSEMBLY (Continued)

21. Remove the spiral lock output yoke lock nut from the mainshaft. Remove the flange from the mainshaft. If the mainshaft is difficult to remove, tap loose with a hammer.

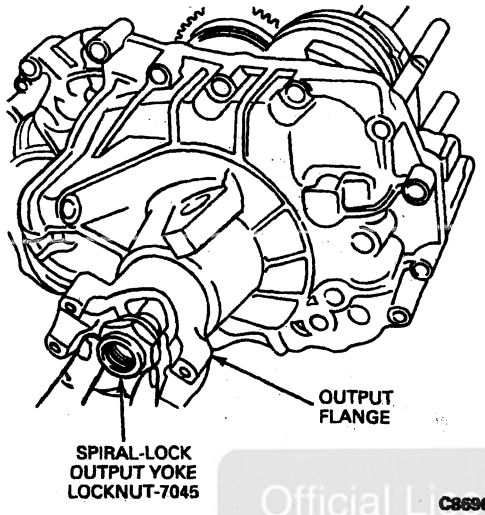

C8696-B

22. Carefully pull the gearpack and shift rails and their holding fixtures forward to dislodge them from the extension housing. Place this assembly on a workbench.

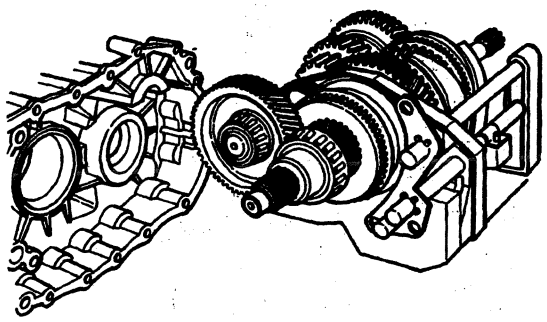

C8697-B

23. Remove the spacer from the mainshaft if so equipped.

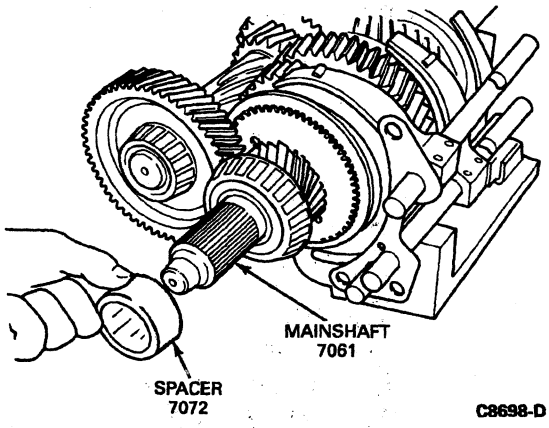

C8698-D

24. Remove the sling from around the shift rails, gearpack, and holding fixture.
25. Turn the shift rails approximately 45 degrees to release them from the shift hubs. Lift the shift rails, 3-4 shifter forks and gear selector interlock sleeve, together with Shift Rod Support T87T-7025-JH, off the mainshaft.

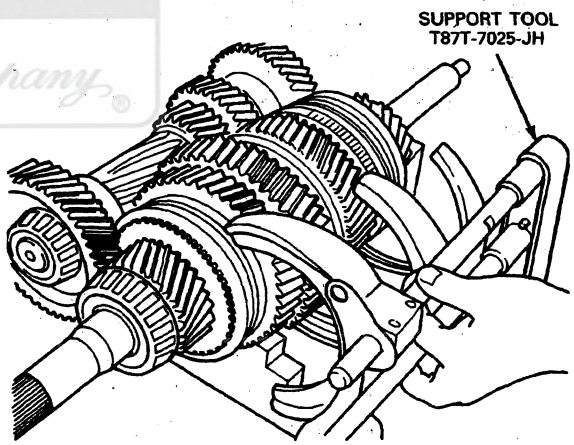

C8699-D

Official Licensed Product

DISASSEMBLY (Continued)

26. Using the shift rod support tool as a base, set the shift rail assembly on a workbench with the shift rails in a vertical position. Remove the gear selector interlock plate.

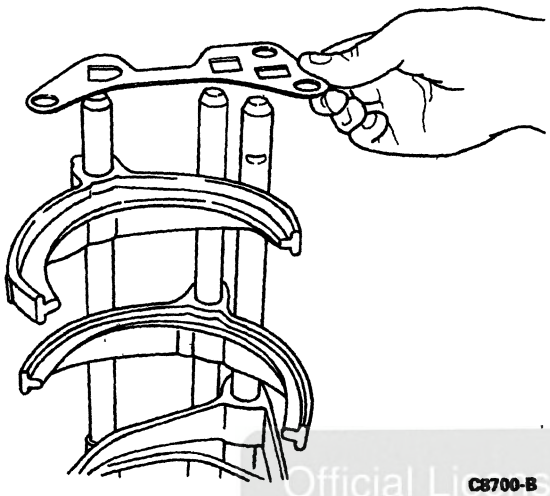

C8700-B

27. Mark each gear shifter fork (7230), shift rail, and position in the holding fixture to make reassembly easier. Lift the shift rails from the support tool. Refer to Shift Lever Housing in the Disassembly and Assembly of Subassemblies portion of this section for disassembly procedures.

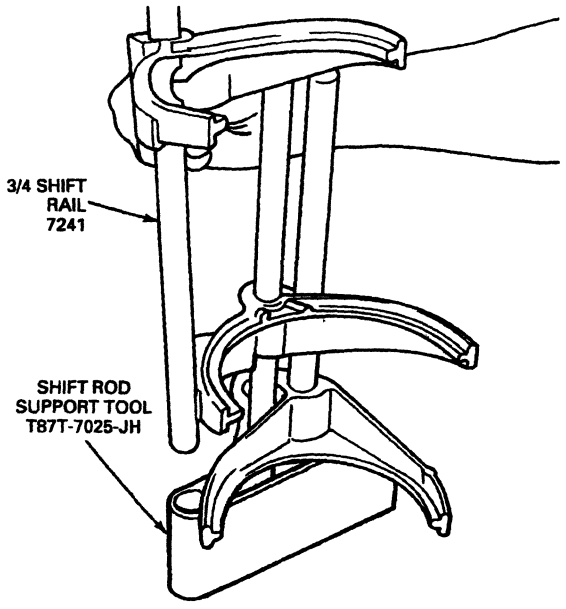

C8701-D

28. Lift the countershaft cluster gear off the bench stand. Separate the input shaft (7017) from the mainshaft. Lift the mainshaft from the stand. Refer to Mainshaft and to Bearing, Countershaft and to Input Shaft and Bearing in the Disassembly and Assembly of Subassemblies portion of this section.

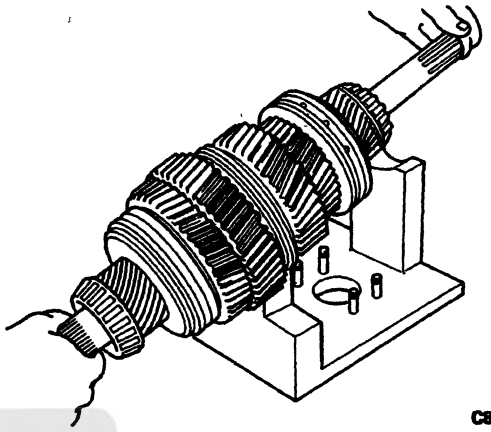

C8702-B

29. Remove the rear cover from the holding fixture.

Extension Housing — Shift Rail Bearing, Countershaft and Mainshaft Bearing Outer Race

Disassembly

SPECIAL SERVICE TOOL(S) REQUIRED

Description	Tool Number
Impact Slide Hammer	T50T-100-A

1. NOTE: Refer to Transmission in the Disassembly portion of this section for removal procedure.

   If required, drive out the two dowel pins from extension housing (7A039).

DISASSEMBLY (Continued)

2. Using Impact Slide Hammer T50T-100-A, and Internal Puller D80L-943-A or equivalent, remove the outer race of output shaft rear bearing (7R205) from the extension housing.

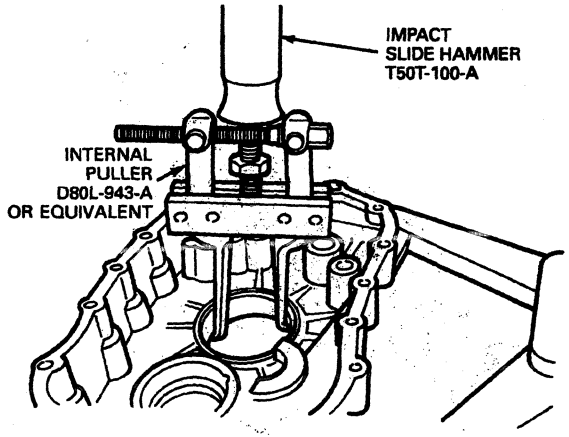

C8737-C

3. Using a suitable drift, drive the oil seal (7052) out of the extension housing and discard.

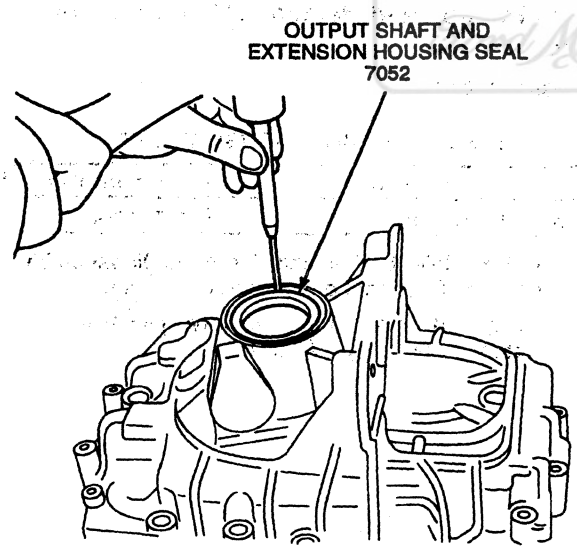

DC0004-A

4. Using Impact Slide Hammer T50T-100-A and Internal Puller D80L-943-A or equivalent, remove the countershaft rear bearing outer race from the extension housing.

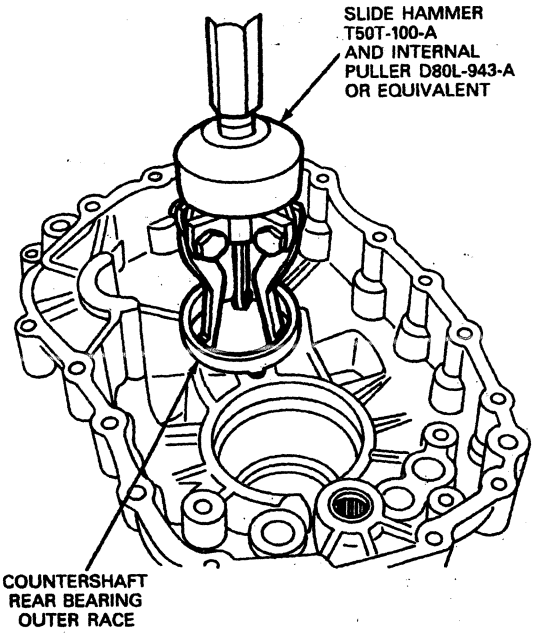

C8739-B

5. If required, remove the central shift rail bearing from the extension housing. Use Blind Hole Puller D80L-100-G or equivalent and Impact Slide Hammer T50T-100-A to remove the bearing.

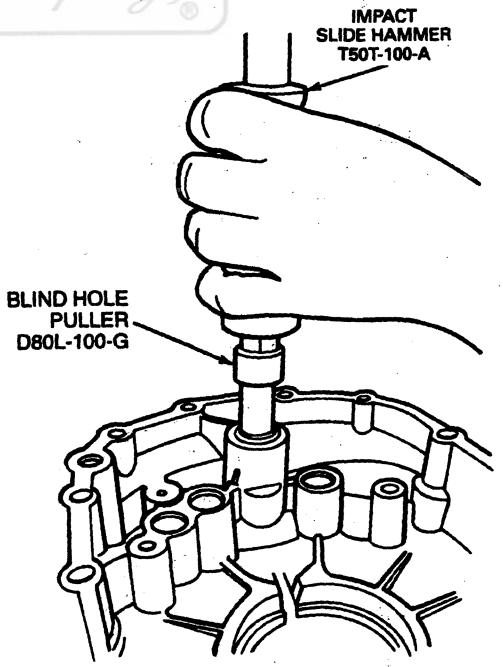

DC0059-A

DISASSEMBLY AND ASSEMBLY OF SUBASSEMBLIES

Shift Lever Housing

1. NOTE: Disassembly of parts inside the shift lever housing should be confined to replacement of the detent when necessary.

   If required, install a new detent in the shift lever housing. Using Rotunda Heat Gun 107-R0300 or equivalent.

2. Heat the detent mounting area in the shift lever housing to approximately 120°C (248°F). Press the detent into its mounting hole until it rests against its stop in the base of the hole.

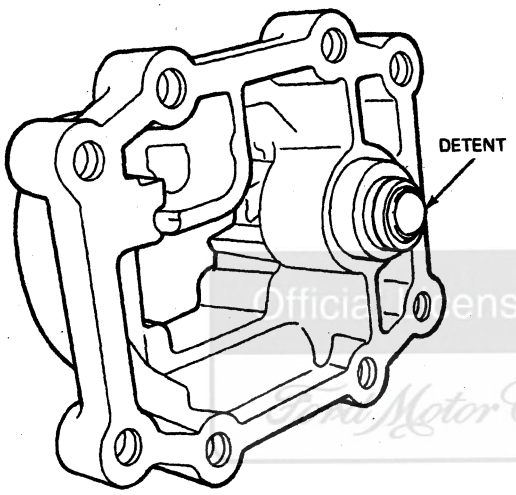

C8733-B

Case

SPECIAL SERVICE TOOL(S) REQUIRED

Description	Tool Number
Impact Slide Hammer	T50T-100-A
Bearing Cup Puller	T77F-1102-A
Needle Bearing Replacer	T87T-7025-DH
Driver Handle	T80T-4000-W
Front Seal Replacer	T87T-7025-EH
Bearing Cup Replacer	T73T-4222-A
Mainshaft Front Bearing Cup Replacer	T87T-7025-PH

Disassembly

1. NOTE: If the main drive gear bearing retainer (7050) is being removed, the oil seal can be removed when the main drive gear bearing retainer is out of the housing.

   NOTE: The through-bore of oil seal (7052) is designed such that oil seal can be removed without having to disassemble the transmission if removal and replacement of oil seal is all that is required. Refer to Front Seal in the Removal portion of this section.

   If required, remove three mounting screws and remove main drive gear bearing retainer.

2. Using a punch, remove the oil seal from the base of the main drive gear bearing retainer.

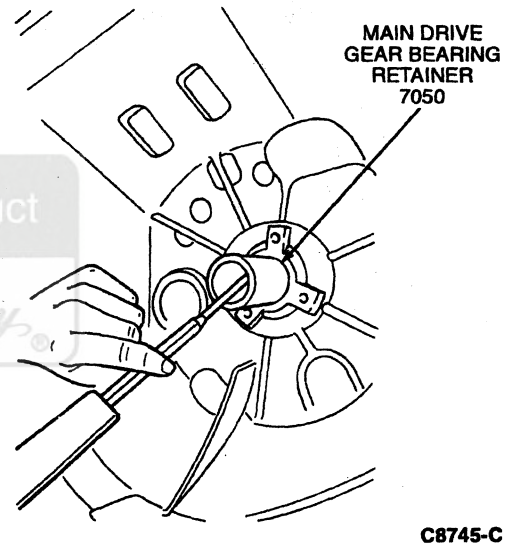

C8745-C

3. NOTE: Case disassembly is required to enable reuse of smaller parts.

   Using Impact Slide Hammer T50T-100-A and Bearing Cup Puller T77F-1102-A, remove the input shaft bearing outer race from the case (7005).

Official Licensed Product Ford Motor Company

DISASSEMBLY AND ASSEMBLY OF SUBASSEMBLIES (Continued)

4. NOTE: The oil baffle will be destroyed when the race is removed. Discard the oil baffle and install a new one during assembly.

   Remove the oil baffle and input bearing front shims.

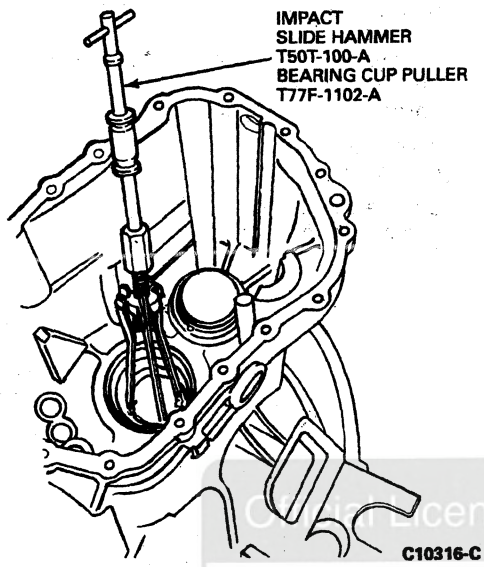

5. Remove the front bearing outer race with Impact Slide Hammer T50T-100-A and Internal Puller D80L-943-A.

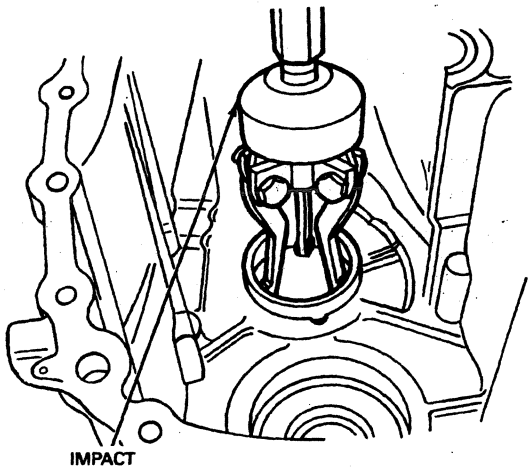

6. If required, remove the case plugs (7A010) and sealing rings from the case.

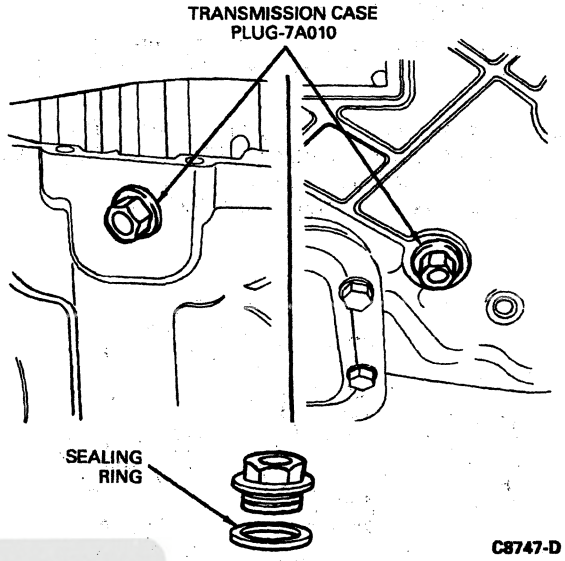

7. If required, remove the slotted spring pins that hold the 5th-reverse interlock plate from their bores in the case just below the shift control housing (7203).

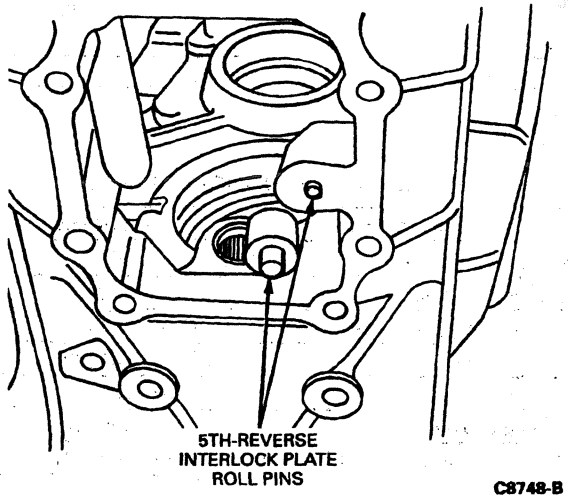

DISASSEMBLY AND ASSEMBLY OF SUBASSEMBLIES (Continued)

8. If required, remove the central shift rail needle bearing from the case using Impact Slide Hammer T50T-100-A and Blind Hole Puller D80L-100-Q or equivalent.

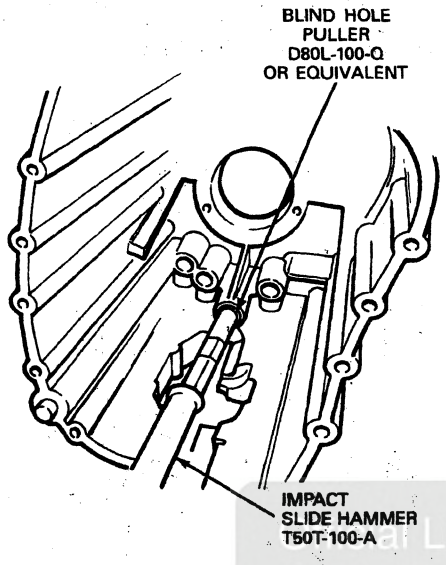

Assembly

1. If they were removed, tap the 5th-reverse interlock plate roll pins into their bores in the case until the bigger one bottoms out (sticks out approximately 8 mm (0.315 inch); the small one sticks out 4-5 mm (0.158-0.197 inch). Do not allow it to bottom out.

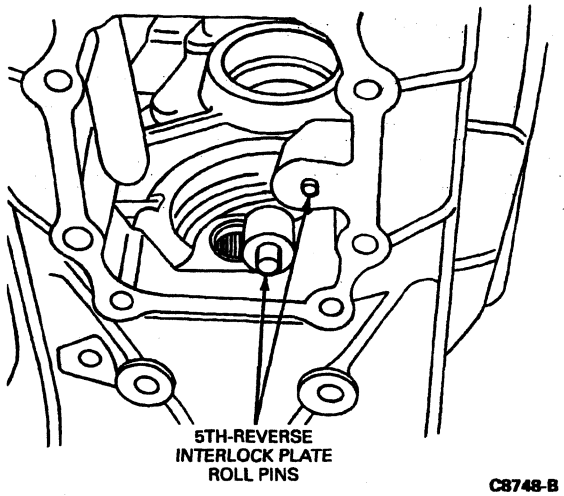

2. Heat the case in the area of the bearing bore of 5th-reverse shift rail to 160°C (320°F) with Rotunda Heat Gun 107-R0300 or equivalent. Drive the bearing sleeve in with Needle Bearing Replacer T87T-7025-DH and Driver Handle T80T-4000-W until it is flush with the surface of the bore.

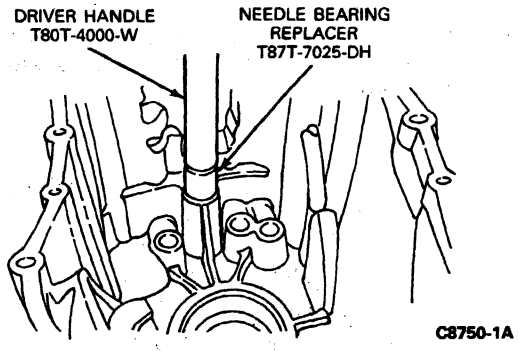

3. If removed, install the case plugs into the case. Tighten to 60 N·m (44 lb-ft). Both case plugs are of the straight-thread type, which require rubber sealing rings to prevent leakage. (These torque values apply to a cold case.)
4. Place a new shifter shaft seal on the release bearing guide tube (7.3L and 7.5L housings only).

Ford Motor Company Licensed Product

DISASSEMBLY AND ASSEMBLY OF SUBASSEMBLIES (Continued)

5. **CAUTION: If the countershaft cluster gear (7113), input shaft (7017), mainshaft or one or more tapered roller bearings has been replaced, it is mandatory that the tapered roller bearings be adjusted to obtain a preload of 0.02 to 0.11 mm (0.00079 to 0.00434 inch). Refer to adjustments in this section for procedure.**

   Position the oil seal in the case. Using Driver Handle T80T-4000-W and Front Seal Replacer T87T-7025-EH, drive in the oil seal until it seats against its stop.

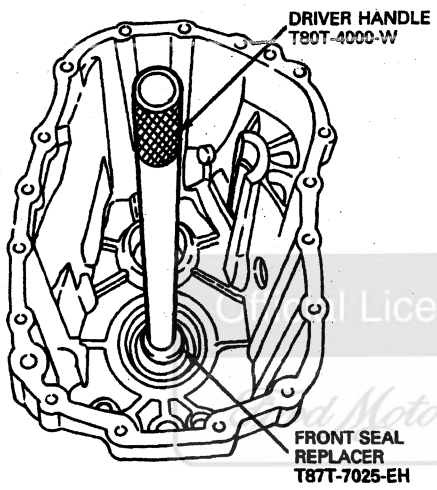

C8753-C

6. Heat up the mounting bore in the case for the outer race of the output shaft bearing (7065) to 160°C (320°F) with Rotunda Heat Gun 107-R0300 or equivalent.
7. Position the output bearing front shim with proper thickness in the bore. Using Driver Handle T80T-4000-W and Bearing Cup Replacer T73T-4222-A, drive the output shaft bearing in until it seats against the stop in the case.

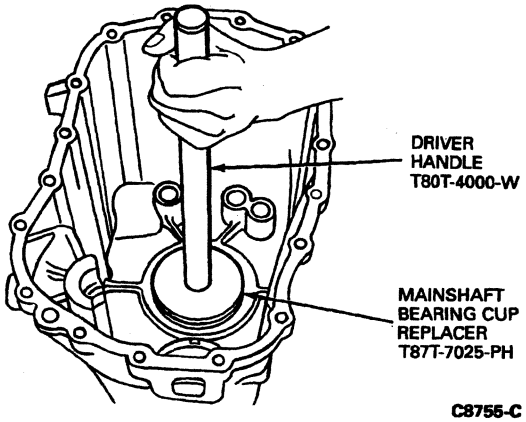

C8755-C

8. Heat the case in the area of the bearing (7025) of input shaft to 160°C (320°F) with Rotunda Heat Gun 107-R0300 or equivalent.
9. Position the correct input bearing front shim in the bore for the bearing. Using Driver Handle T80T-4000-W and Mainshaft Front Bearing Cup Replacer T87T-7025-PH, drive the bearing in until it seats against its stop in the bore.

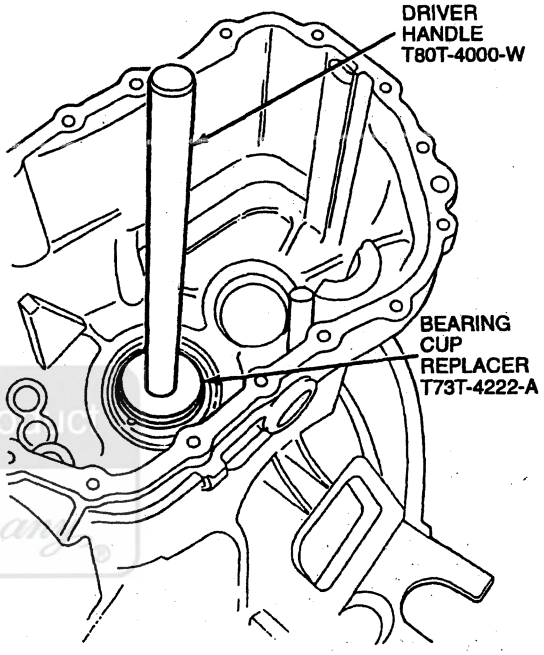

C8754-D

Input Shaft and Bearing

SPECIAL SERVICE TOOL(S) REQUIRED

Description	Tool Number
Inner Pinion Bearing Cone Replacer	T85T-4621-AH
Axle Bearing/Seal Plate	T75L-1165-B

DISASSEMBLY AND ASSEMBLY OF SUBASSEMBLIES (Continued)

Disassembly

1. Position the two Collet Halves (44803 and 44797) of the Pinion and Carrier Bearing Puller D81L-4220-A or equivalent around the bearing (7025). Install the Puller on the collet halves and pull the case bearing from the input shaft (7017).

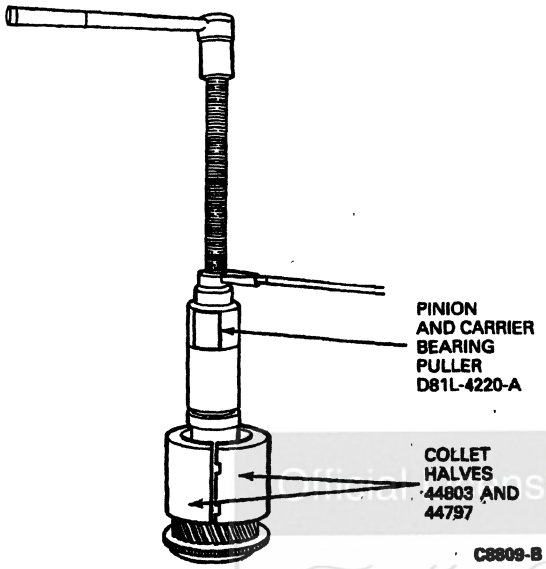

Assembly

1. **CAUTION: Inspect the surface of the input shaft in the area of the bearing race to make sure it is smooth and free of burrs.**

   Place the case bearing on the input shaft.

2. Place Inner Pinion Bearing Cone Replacer T85T-4621-AH over the case bearing.

3. **CAUTION: Make sure that the oil baffle is fully installed and not damaged.**

   Position the case bearing, input shaft, and Inner Pinion Bearing Cone Replacer T85T-4621-AH in Axle Bearing / Seal Plate T75L-1165-B as shown in the illustration.

4. **CAUTION: Press plunger must not contact pocket bearing outer race.**

   Press the bearing on until it seats against its stop on the input shaft.

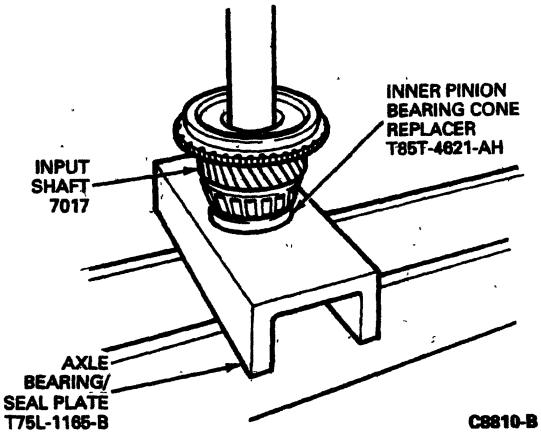

5. **CAUTION: Do not heat the case bearing for more than 15 minutes.**

   CAUTION: Do not drive against the bearing cone. Drive against the inner race only.

   An alternate method is to heat the inner race of the case bearing to 160°C (320°F) with Rotunda Precision Metal Gear / Bearing Heater 164-R3900, Heat Gun 107-R0300 or equivalent and position it on the input shaft. Use a suitable tool to seat the case bearing against its stop.

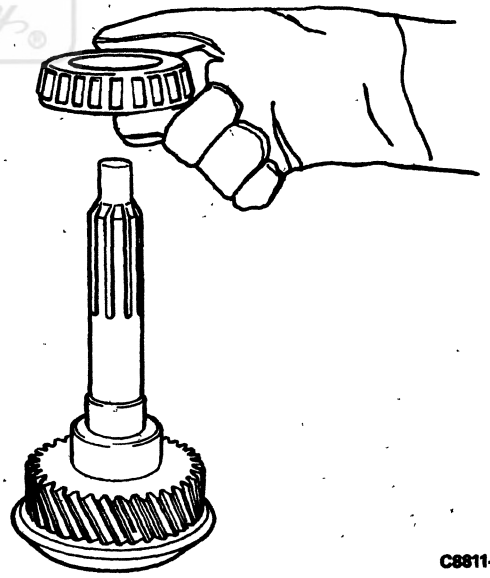

Ford Motor Company

DISASSEMBLY AND ASSEMBLY OF SUBASSEMBLIES (Continued)

Mainshaft

SPECIAL SERVICE TOOL(S) REQUIRED

Description	Tool Number
Bearing Collets	T87T-7025-FH
Remover Tube	T77J-7025-B
Bearing Collet Sleeve	T75L-7025-G
Inner Pinion Bearing Cone Replacer	T85T-4621-AH

Disassembly

1. NOTE: Use brass pads or equivalent in vice jaws to prevent damage to mainshaft.

   Clamp the output end of the mainshaft firmly in a vise.

2. Remove the synchronizer ring from the 3rd-4th synchronizer (7124).

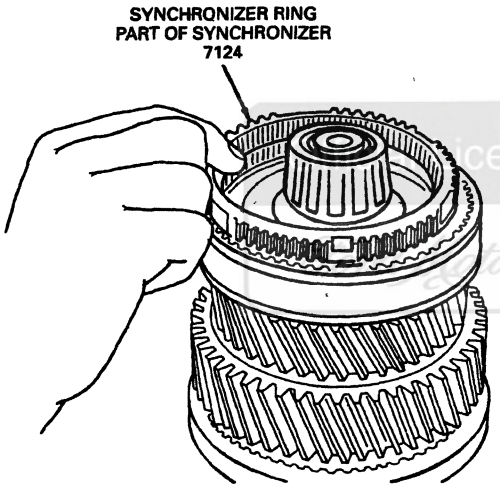

C8756-B

3. Place the Bearing Collets T87T-7025-FH or equivalent on either side of the input shaft pocket bearing. Position the Remover Tube T77J-7025-B in the collets. Pass the Bearing Collet Sleeve T75L-7025-G over the Remover Tube T77J-7025-B and into the collets so they clamp firmly to the input shaft pocket bearing. Pull the input shaft pocket bearing from the mainshaft.

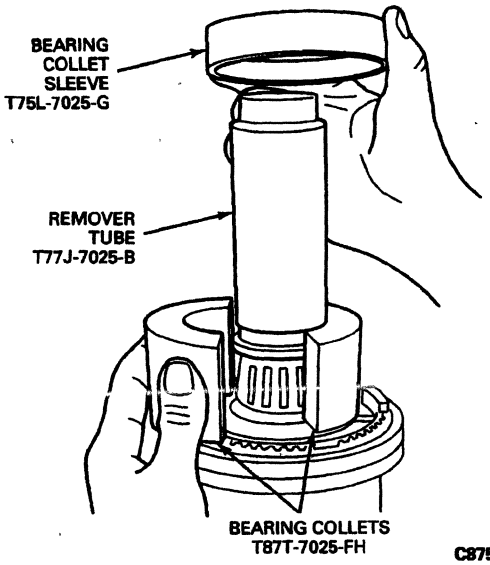

C8757-C

4. **CAUTION: Place a cloth around the synchronizer to catch the compression springs and pressure pieces that will be released when the sliding sleeves are removed.**

   Remove the 3rd-4th gear sliding sleeve (part of synchronizer) from the mainshaft.

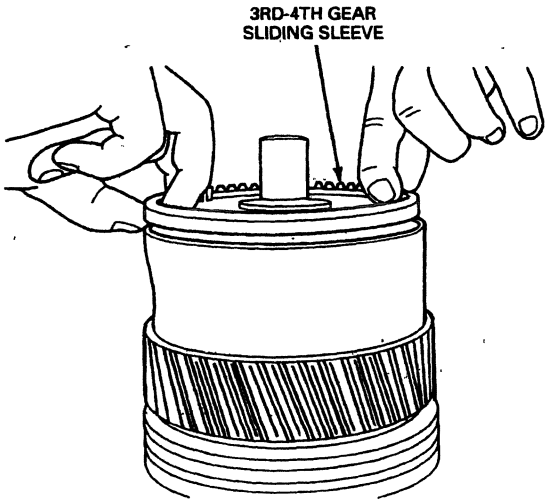

C8758-B

DISASSEMBLY AND ASSEMBLY OF SUBASSEMBLIES (Continued)

5. Remove the snap ring part of small parts repair kit that retains the 3rd-4th synchronizer body to the mainshaft.

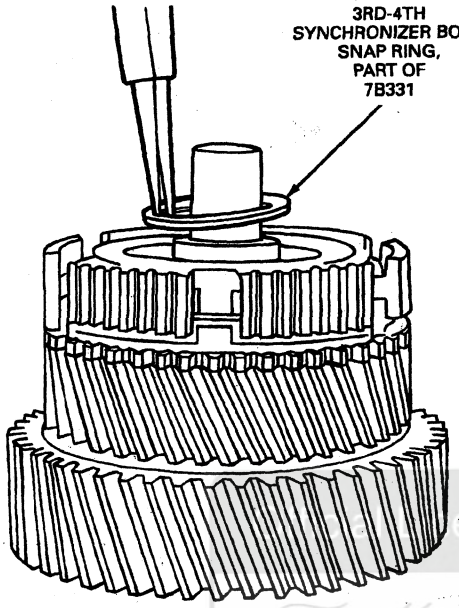

C8759-B

6. Place Bearing Pulling Attachment D79L-4621-A or equivalent over the mainshaft and let it rest on the mainshaft.

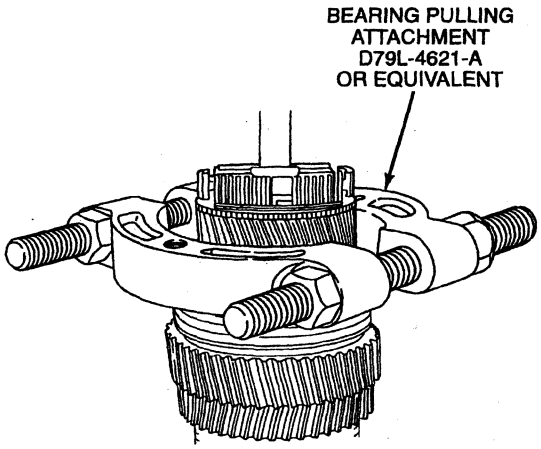

C8760-C

7. Place the Shaft Protector D80L-625-4 or equivalent on the end of the mainshaft. Place the Push-Puller Set D80L-927-A or equivalent on the assembled collet halves and retaining ring and pull the synchronizer body from the mainshaft.

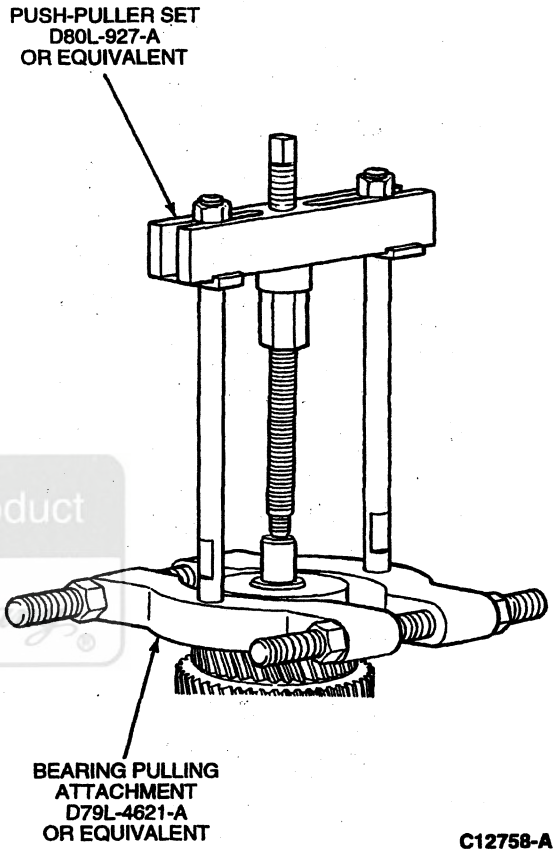

C12758-A

Licensed Product
Ford Motor Company

DISASSEMBLY AND ASSEMBLY OF SUBASSEMBLIES (Continued)

8. Remove the synchronizer ring (part of synchronizer) from the 3rd gear of mainshaft.

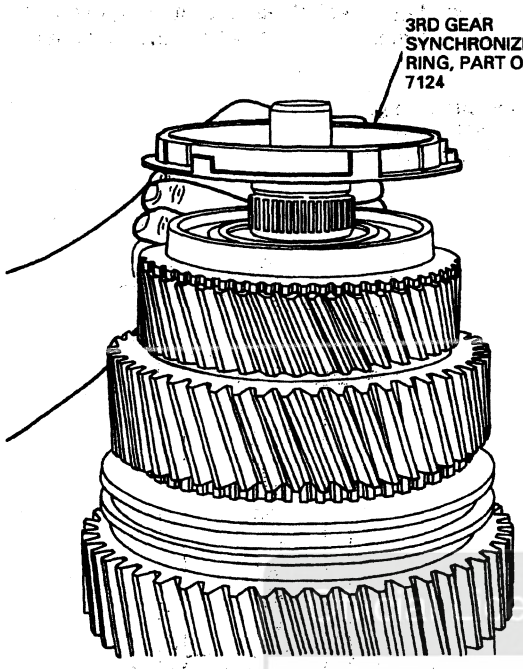

9. Remove the 3rd gear from the mainshaft.

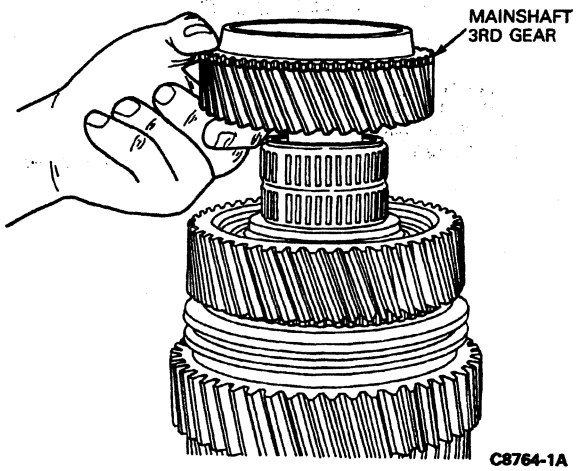

10. Remove the 3rd gear bearings from the mainshaft.

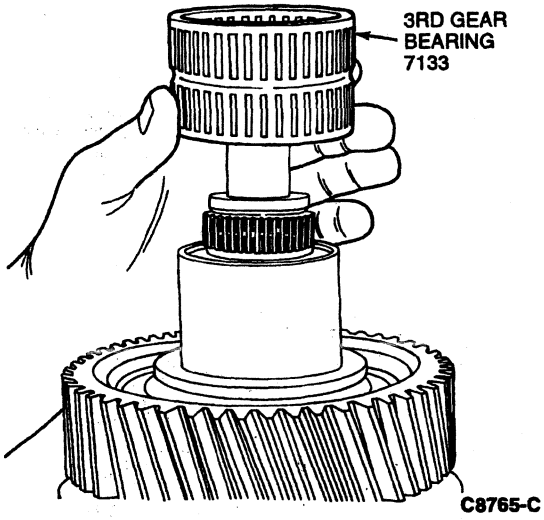

11. Lift the 1st-2nd gear sliding sleeve (part of synchronizer) up as far as it will slide.
12. Position Bearing Pulling Attachment D79L-4621-A or equivalent over the mainshaft and let it rest on the first gear (1GR)(7100).
13. Position the two collet halves of Bearing Pulling Attachment D79L-4621-A or equivalent so they seat in the groove in the 1st-2nd sliding sleeve (part of synchronizer).

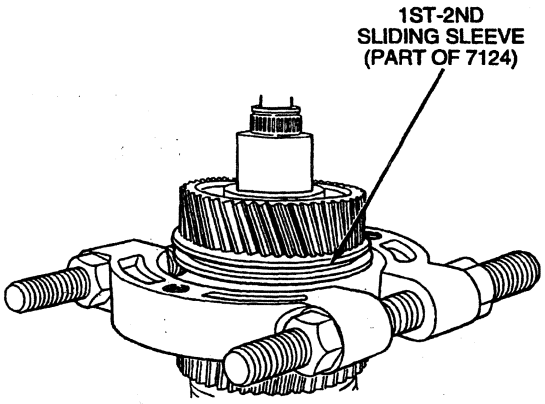

Ford Motor Company Licensed Product

DISASSEMBLY AND ASSEMBLY OF SUBASSEMBLIES (Continued)

14. **CAUTION: Position a cloth around the 1st-2nd synchronizer to catch the springs and pressure pieces that will be released when the sliding sleeve (part of synchronizer) clears the 1st-2nd synchronizer.**

    Position Shaft Protector D80L-625-4 or equivalent on the end of the mainshaft. Position the Push-Puller Set D80L-927-A or equivalent on the Collet Retaining Ring and pull the 1st-2nd sliding sleeve (part of synchronizer), 2nd gear, thrust washer (7119), and input bearing spacer from the mainshaft.

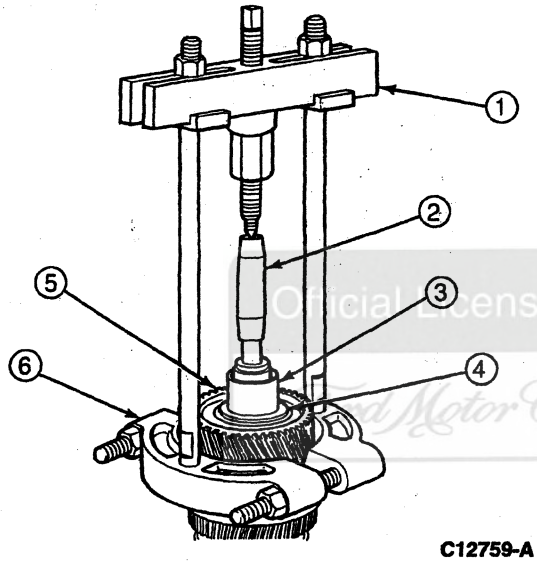

C12759-A

Item	Part Number	Description
1	D80L-927-A	Push-Puller Set
2	D80L-625-4	Shaft Protector
3	7173	Input Bearing Spacer
4	7119	Thrust Washer

(Continued)

Item	Part Number	Description
5	7101	Second Gear
6	—	1st-2nd Sliding Sleeve (Part of 7124)

15. Remove the snap ring (part of small parts repair kit) retaining the 1st-2nd synchronizer body to the mainshaft.

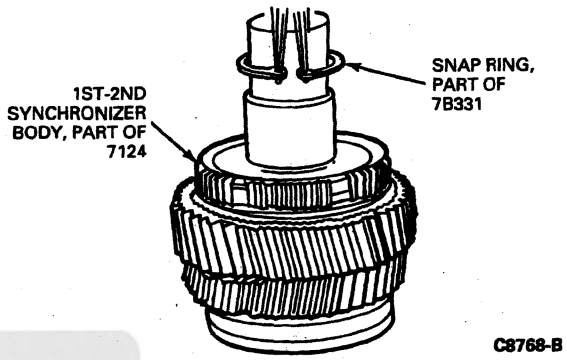

C8768-B

16. NOTE: Use brass pads or equivalent to prevent damage.

    Reposition the mainshaft in the vise so that the output end of the mainshaft is now facing up.

17. **CAUTION: Failure to use a bearing gripper will destroy the output shaft rear bearing (7R205).**

    NOTE: On 4x4 versions and F-Super Duty versions, a snap ring (part of small parts repair kit) retaining the taper roller bearing inner race must be removed.

    Position a bearing gripper such as Bearing Pulling Attachment D79L-4621-A or equivalent on the output shaft rear bearing. The gripper used must pull the output shaft rear bearing by the shoulder of the tapered rollers, not from the bearing cage.

Official Licensed Product Ford Motor Company

DISASSEMBLY AND ASSEMBLY OF SUBASSEMBLIES (Continued)

18. Position Push-Puller Set D80L-927-A or equivalent on the bearing gripper and pull the output shaft rear bearing from the mainshaft.

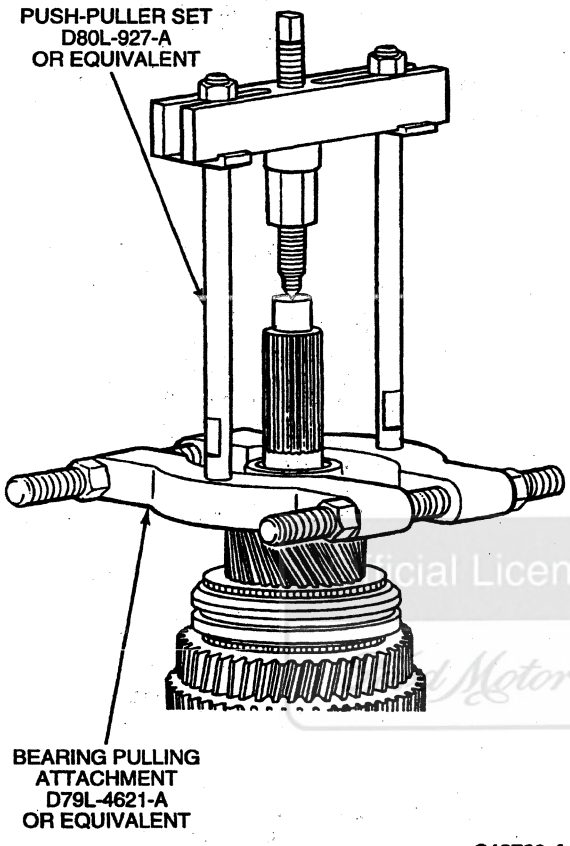

C12760-A

19. Remove the 5th gear from the mainshaft.
20. Remove the 5th gear bearing from the mainshaft.

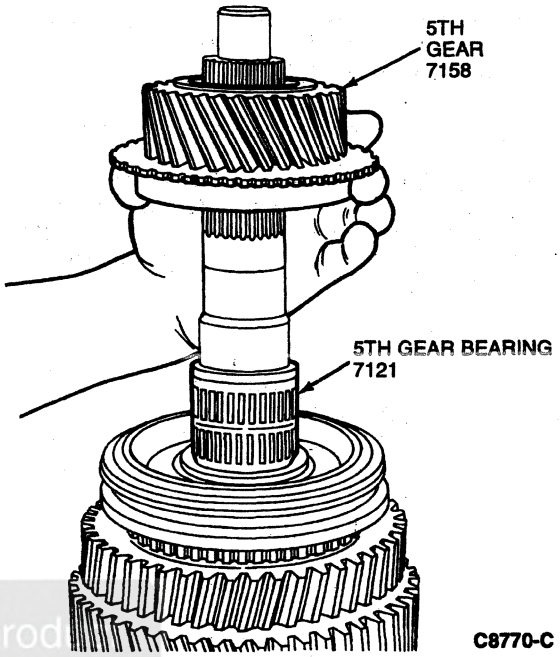

C8770-C

21. Remove the synchronizer ring (part of synchronizer) from the 5th-reverse synchronizer.

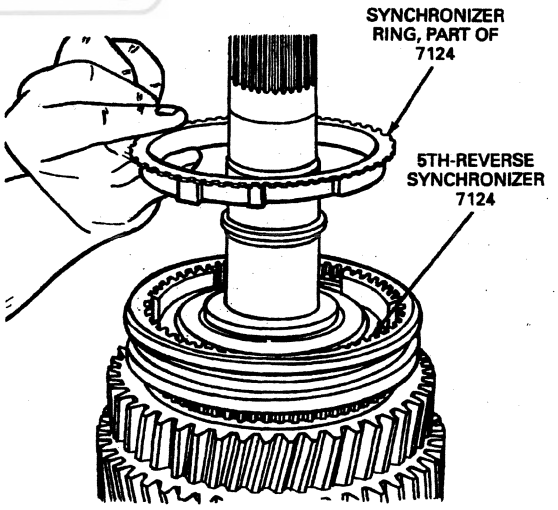

C8771-B

DISASSEMBLY AND ASSEMBLY OF SUBASSEMBLIES (Continued)

22. Remove the snap ring (part of small parts repair kit) retaining the 5th-reverse synchronizer body to the mainshaft.

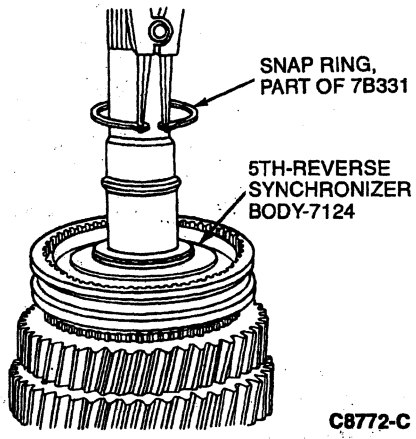

C8772-C

23. **CAUTION: Position a cloth around the 5th-reverse synchronizer to catch the springs and pressure pieces that will be released when the sliding sleeve clears the 5th-reverse synchronizer.**

    Remove the 5th-reverse sliding sleeve (part of synchronizer).

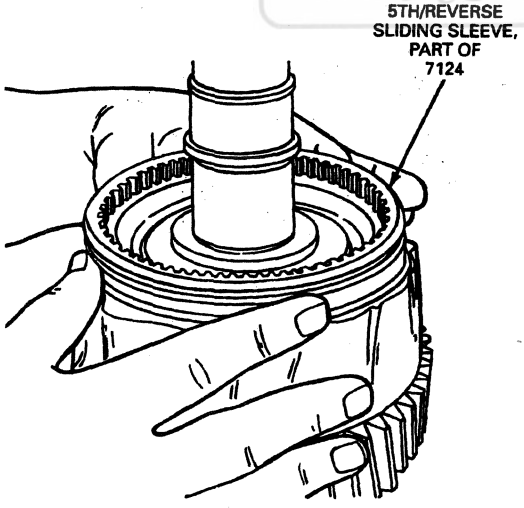

C8773-B

24. Place Bearing Pulling Attachment D79L-4621-A or equivalent over the mainshaft and let it rest on the 1st gear.

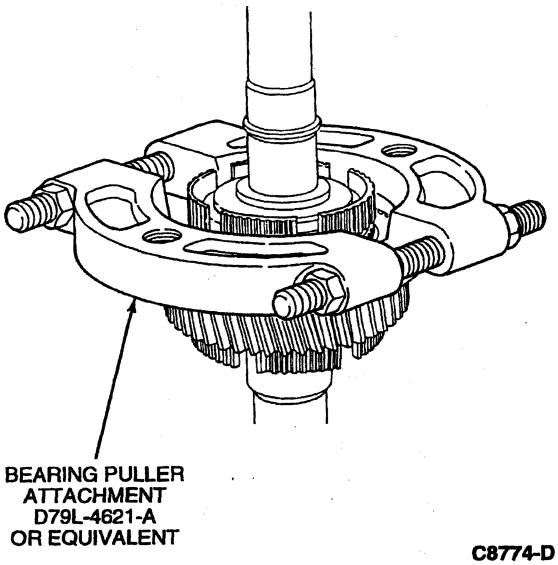

C8774-D

25. Position Push-Puller Set D80L-927-A or equivalent on the Bearing Pulling Attachment D79L-4621-A or equivalent and pull the 5th-reverse synchronizer body from the mainshaft.

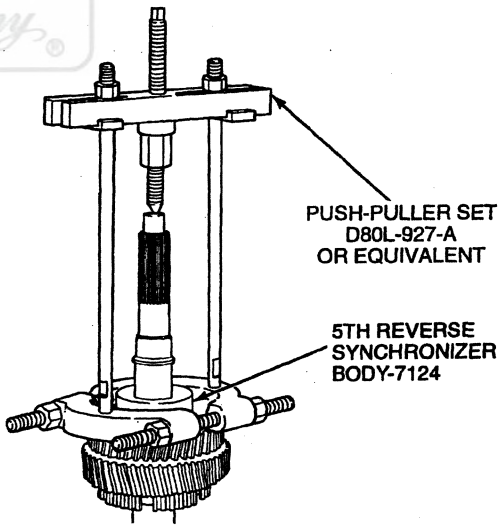

C12761-A

Ford Motor Company

DISASSEMBLY AND ASSEMBLY OF SUBASSEMBLIES (Continued)

26. Remove the synchronizer ring (part of synchronizer) from the reverse gear.

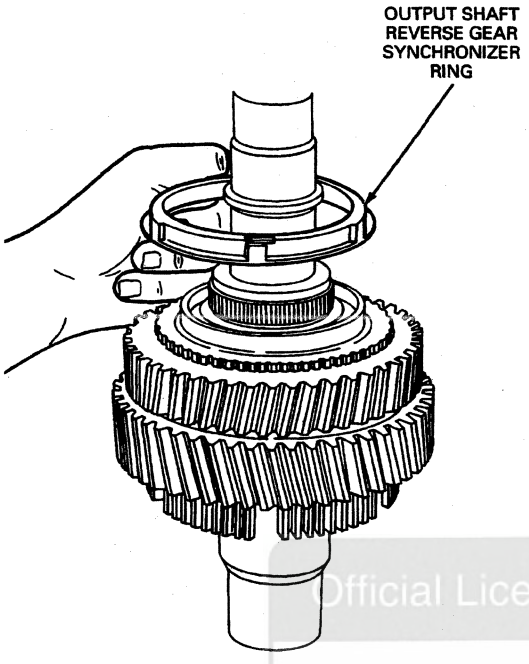

C8776-B

27. Remove the reverse gear from the mainshaft.

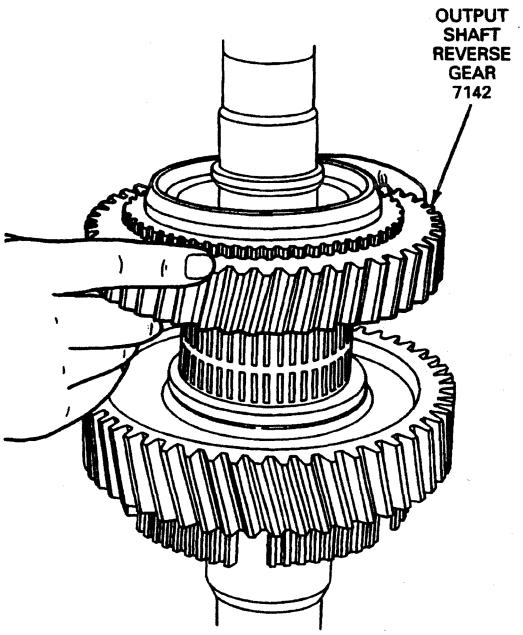

C8777-B

28. Remove the reverse gear bearing from the mainshaft.

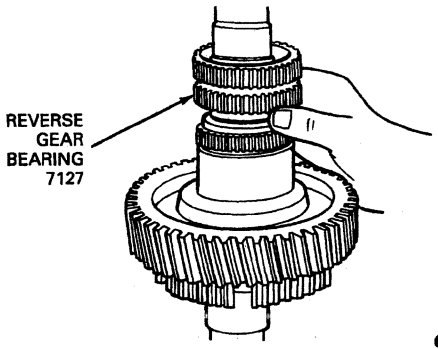

C8778-B

29. Remove the mainshaft from the vise.
30. **CAUTION: Make sure mainshaft is properly supported.**

    Position the mainshaft in a press as shown in the illustration and press the first gear and the 1st-2nd synchronizer from the mainshaft.

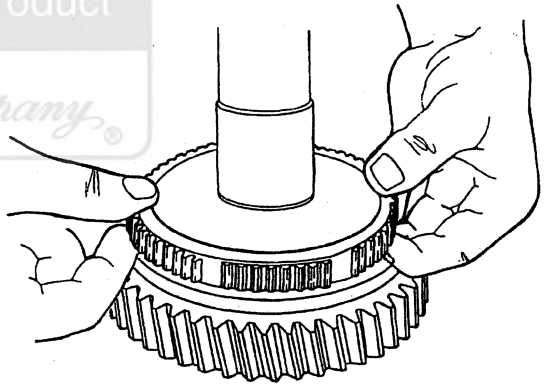

C8799-C

Official Licensed Product
Ford Motor Company

DISASSEMBLY AND ASSEMBLY OF SUBASSEMBLIES (Continued)

31. An alternate method is to clamp the mainshaft at the output end. Position the jaws of Push-Puller Set D80L-927-A or equivalent and Bearing Puller Attachment D79L-4621-A or equivalent on the first gear and pull the first gear and the 1st-2nd synchronizer from the mainshaft.

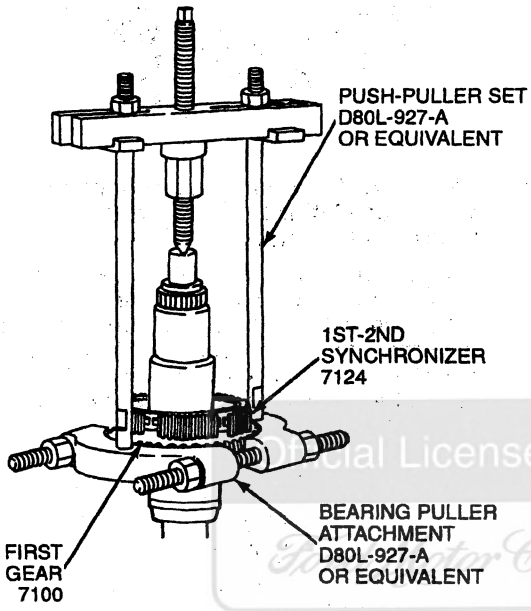

C8780-C

32. Remove the 1st speed gear bearing from the mainshaft.

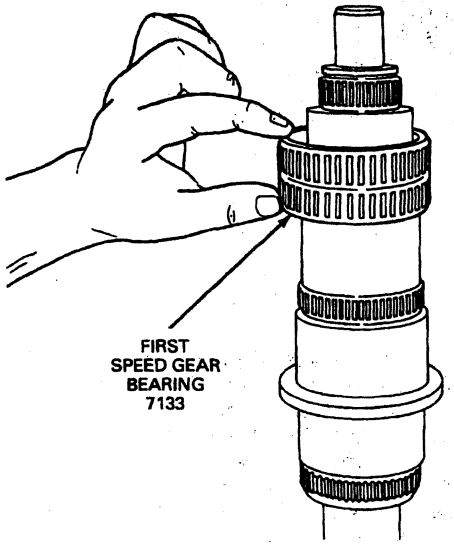

C8781-B

Assembly

1. NOTE: Use brass pads or equivalent to prevent damage.

   Clamp the input end of the mainshaft in a vise.

2. Place the reverse gear bearing on the mainshaft.

3. **CAUTION: Before installing original synchronizer, check for excessive wear. Refer to wear check of synchronizer under Synchronizers in the Cleaning and Inspection portion of this section.**

   Place the reverse gear on the mainshaft over the reverse gear bearing. The clutching teeth on the reverse gear must face upwards.

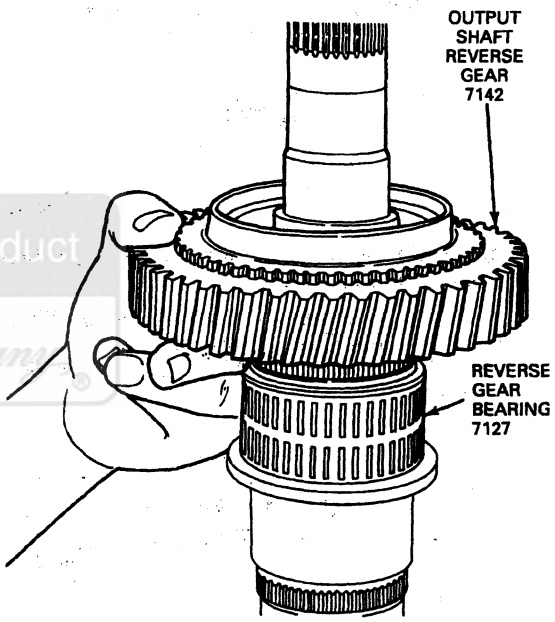

C8782-B

Official Licensed Product
Factory Company

DISASSEMBLY AND ASSEMBLY OF SUBASSEMBLIES (Continued)

4. Position the reverse gear synchronizer ring (part of synchronizer) on the taper of the reverse gear.

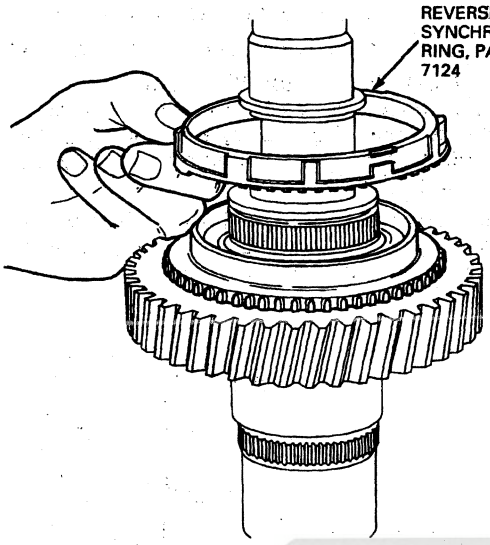

C8783-B

5. **CAUTION: Do not heat synchronizer body for more than 15 minutes.**

   Heat the 5th-reverse synchronizer body with a Precision Metal Gear / Bearing Heater 164-R3900, Heat Gun 107-R0300 or equivalent to 160°C (320°F).

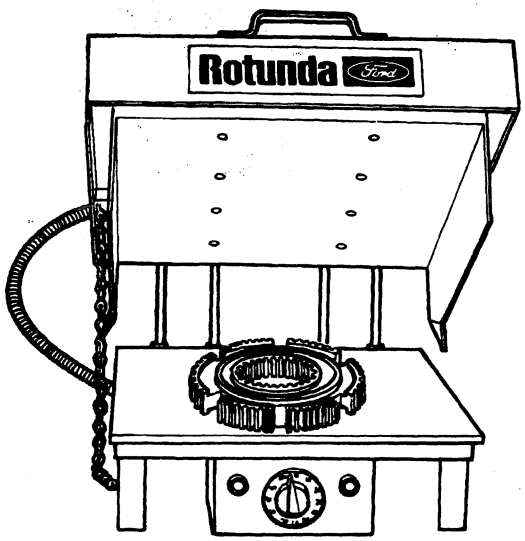

C8784-1A

6. Position the synchronizer body on the mainshaft so that the side with the deeper hub faces down and the short lugs on the synchronizing ring (part of synchronizer) engage in the shallow gaps in the synchronizer body. Push or lightly tap the synchronizer body down until it stops.

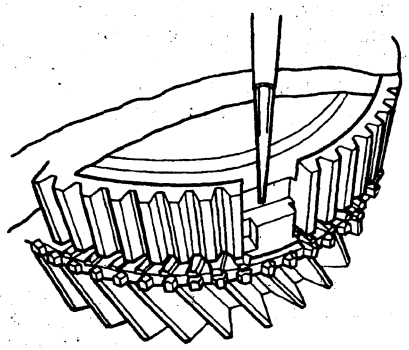

C8785-C

7. **CAUTION: Make sure snap ring (part of small parts repair kit) is free of burrs before checking clearance.**

   Install the snap ring (part of small parts repair kit) on the mainshaft next to the 5th-reverse synchronizer body. The clearance between the snap ring (part of small parts repair kit) and the synchronizer body should not be more than 0.1 mm (0.004 inch) with zero clearance preferable.

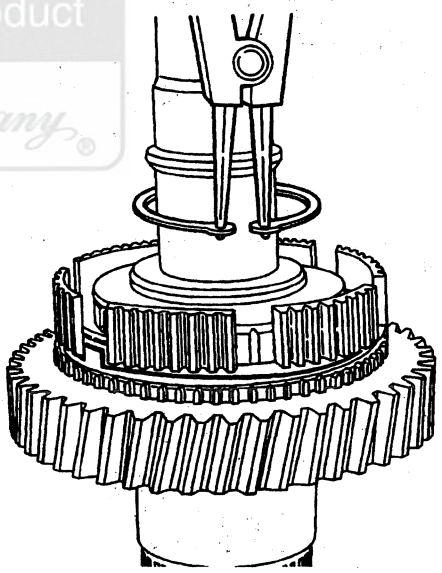

C8786-C

8. Check the reverse gear end play. End play must be between 0.15-0.35 mm (0.00591-0.01378 inch).

9. There are two grooves on the 5th-reverse sliding sleeve (part of synchronizer). With the two grooves facing up (toward output end of mainshaft), position the sliding sleeve over the synchronizer body (both part of synchronizer). In three positions on the sliding sleeve, three teeth have been cut away. Align these three areas with the three shallow gaps in the synchronizer body and the three lugs on the synchronizer ring (part of synchronizer). Slide the sliding sleeve down until it rests over the clutching teeth of reverse gear.

Unauthorized Product Motor Company

DISASSEMBLY AND ASSEMBLY OF SUBASSEMBLIES (Continued)

10. **CAUTION: If the original springs (part of countershaft pilot bearing) are not being replaced, inspect them before reuse. Refer to Synchronizer Compression Spring Tension Check in the Cleaning and Inspection portion of this section for procedure.**

    Insert three compression springs with each pressure piece in the recesses of the synchronizer body (all part of synchronizer).

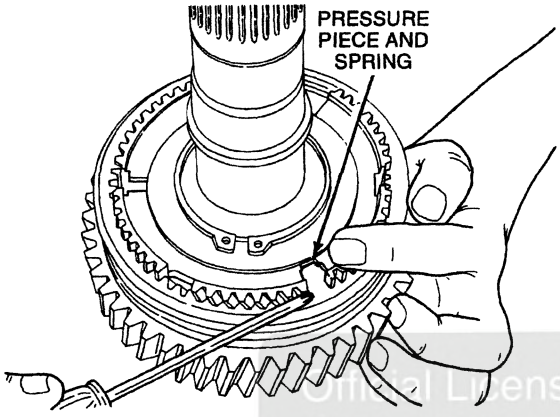

C8788-C

11. NOTE: The short lugs on the synchronizer ring should be located over the shallow gaps in the 5th-reverse synchronizer body.

    Place the 5th gear synchronizer ring on the synchronizer body (both part of synchronizer).

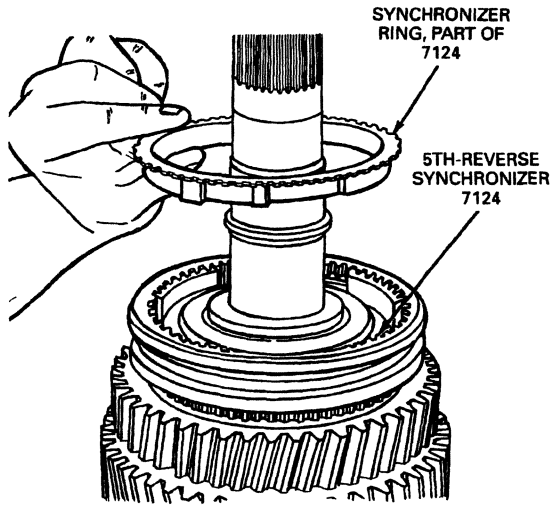

C8771-B

12. Push the 5th gear synchronizer ring (part of synchronizer) downwards while pulling the sliding sleeve (part of synchronizer) into the center position.

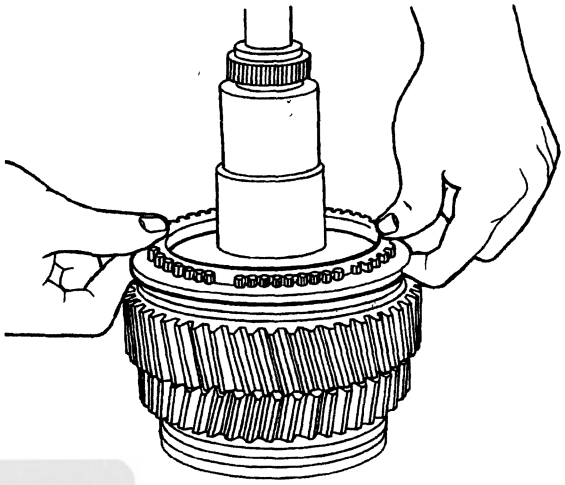

C8789-B

13. Place 5th gear bearing on the mainshaft.

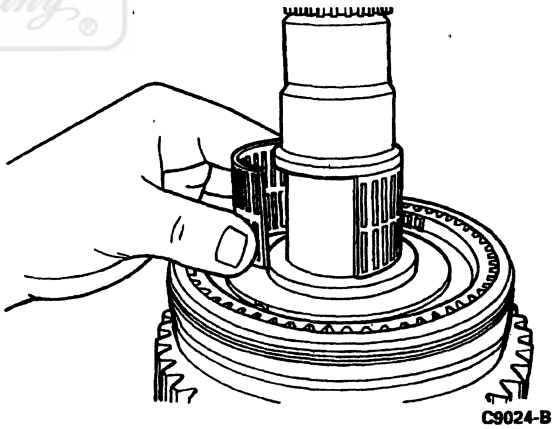

C9024-B

Official Licensed Product

DISASSEMBLY AND ASSEMBLY OF SUBASSEMBLIES (Continued)

14. Install the 5th gear on the mainshaft over the 5th gear bearing.

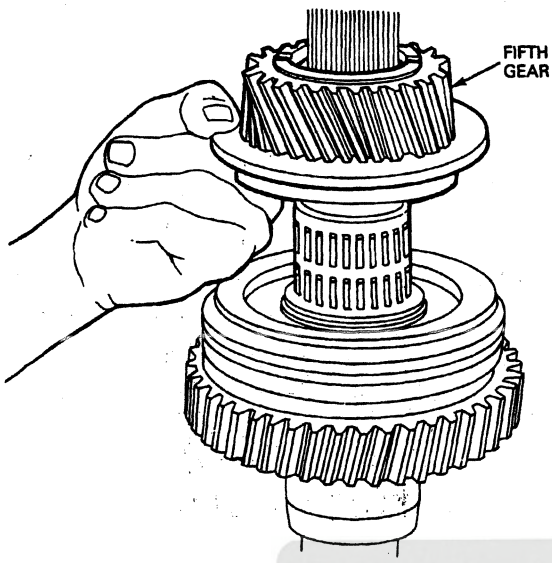

15. **CAUTION: Do not heat the output shaft rear bearing for more than 15 minutes.**

    CAUTION: If necessary to drive the output shaft rear bearing on, drive against the inner race only. Do not drive against the bearing cone.

    Heat the inner race of the output shaft rear bearing to 160°C (320°F) with Rotunda Precision Metal Gear / Bearing Heater 164-R3900 or equivalent. Place it on the mainshaft and drive it on if necessary until it seats against its stop on the mainshaft.

16. NOTE: On 4x4 and F-Super Duty versions, fit an additional retaining ring (part of small parts repair kit) in the annular groove adjacent to the inner race. It must have an end play of 0.0-0.1 mm (0.0-0.004 inch). 0 mm (0.0 inch) should be aimed for.

    Check the end play of the 5th gear. End play must be 0.15-0.35 mm (0.006-0.014 inch).

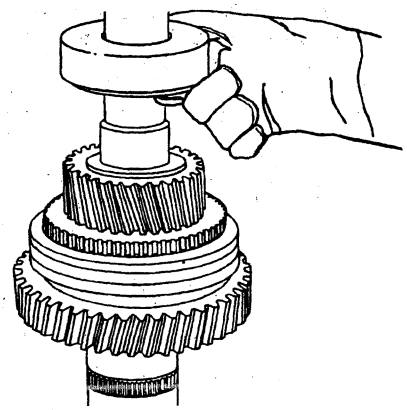

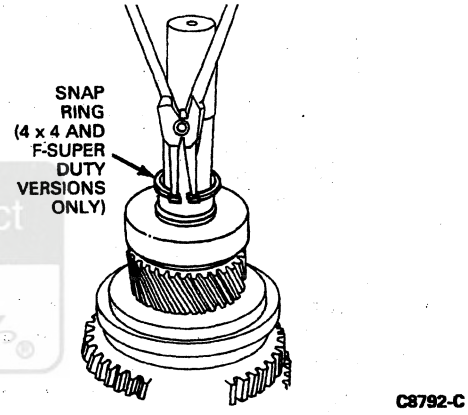

17. NOTE: Use brass pads or equivalent to prevent damage.

    Turn the mainshaft over and clamp it at the output end.

18. Place the first gear bearing on mainshaft.

Official Licensed Product

DISASSEMBLY AND ASSEMBLY OF SUBASSEMBLIES (Continued)

19. Place the first gear over the first gear bearing. The clutching teeth on first gear must face upward.

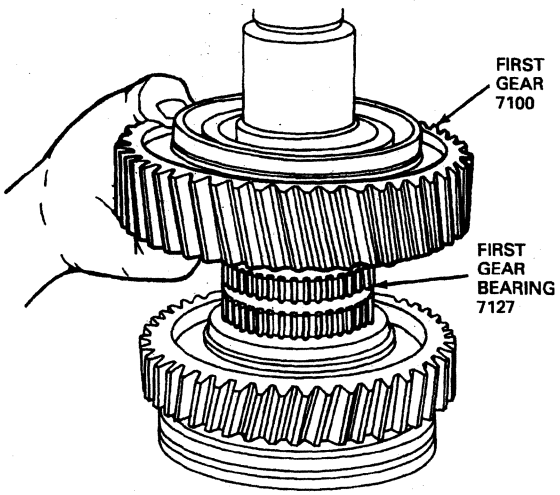

C8793-B

20. Place the synchronizer ring (part of synchronizer) on the taper of the first gear.

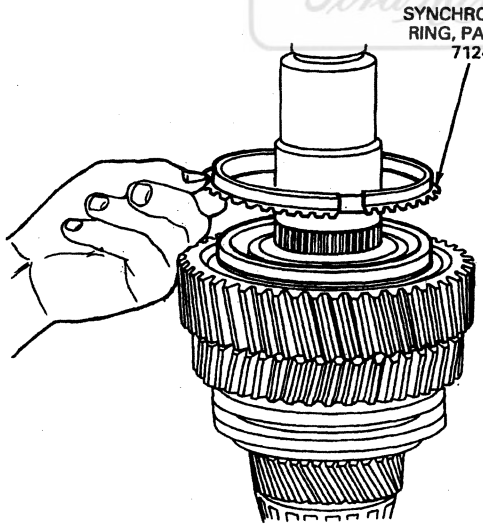

C8794-B

21. **CAUTION: Do not heat the synchronizer body for more than 15 minutes.**

Heat the 1st-2nd synchronizer body to 160°C (320°F) with Rotunda Precision Metal Gear / Bearing Heater 164-R3900 or equivalent. Position the synchronizer body on the mainshaft so that the short lugs on the synchronizing ring (part of synchronizer) engage in the shallow gaps in the synchronizer body. Lightly tap the synchronizer body down until it stops against the synchronizer ring (part of synchronizer). When proper installation is made, the word ENGINE will be visible on the synchronizer body.

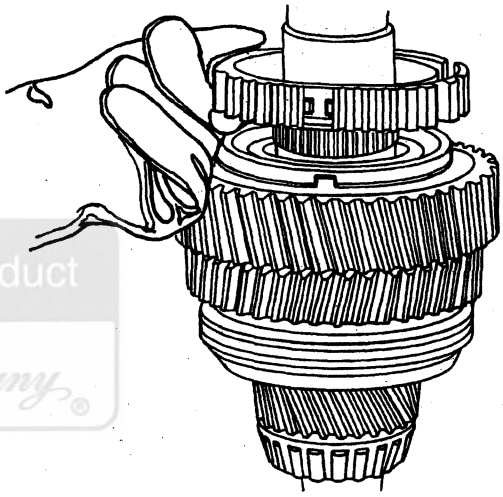

C8795-D

22. Install a new snap ring on the mainshaft next to the 1st-2nd synchronizer body (part of small parts repair kit). Clearance between the snap ring and the synchronizer body should not be more than 0.1 mm (0.004 inch).

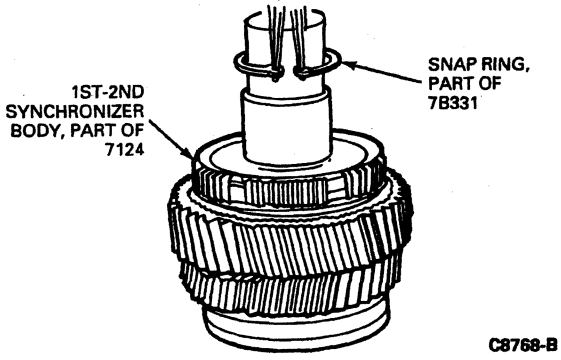

C8768-B

23. Check the end play of the first gear. It must be between 0.15 and 0.35 mm (0.006 and 0.014 inch).

Official Licensed Product
Ford Motor Company

DISASSEMBLY AND ASSEMBLY OF SUBASSEMBLIES (Continued)

24. Position the sliding sleeve over the synchronizer body with its tapered collar facing down (toward the output end of the mainshaft). In three positions on the sliding sleeve, three teeth have been cut away. Align these three areas with the three shallow gaps in the synchronizer body and the three lugs on the synchronizer ring. Slide the sliding sleeve down until it rests against the first gear.
25. **CAUTION: If the original springs are not being replaced, inspect them before reuse. Refer to Synchronizer Compression Spring Tension Check in the Cleaning and Inspection portion of this section for procedure.**

    Insert three compression springs with each pressure piece (part of small parts repair kit) in the recesses of the synchronizer.

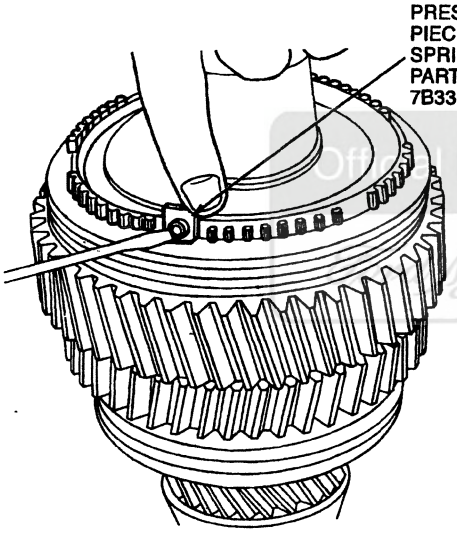

C8797-C

26. NOTE: The short lugs on the synchronizer ring should be located over the gaps in the 1st-2nd synchronizer body.

    Place the 2nd gear synchronizer ring (part of synchronizer) on the 1st-2nd synchronizer body.

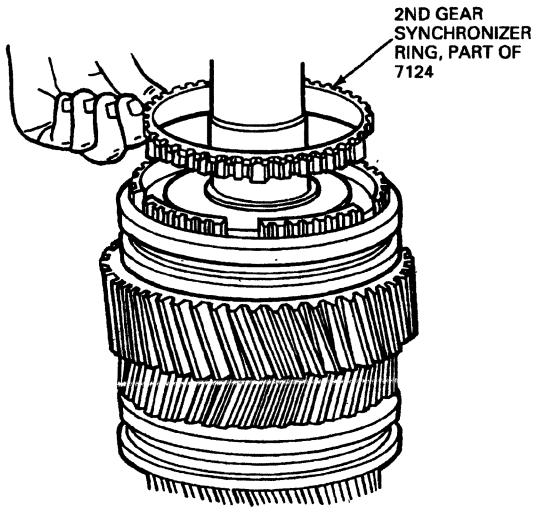

C8798-B

27. Push the synchronizer ring downwards while pulling the sliding sleeve into the center position.

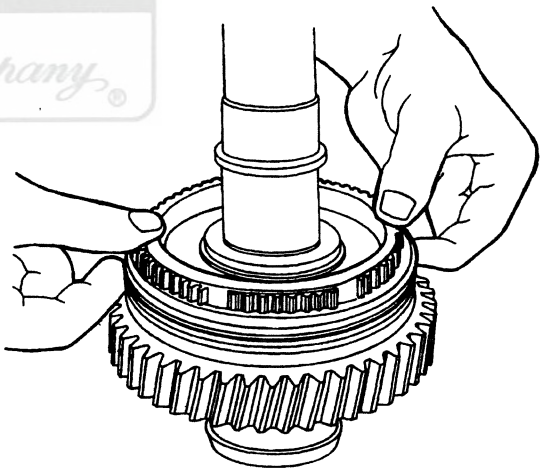

C8799-B

28. Place the second speed gear bearing on the mainshaft.

Official Licensed Product Motor Company

DISASSEMBLY AND ASSEMBLY OF SUBASSEMBLIES (Continued)

29. Place the 2nd gear over the second speed gear bearing on the mainshaft. The taper of the 2nd gear must face down on the mainshaft.

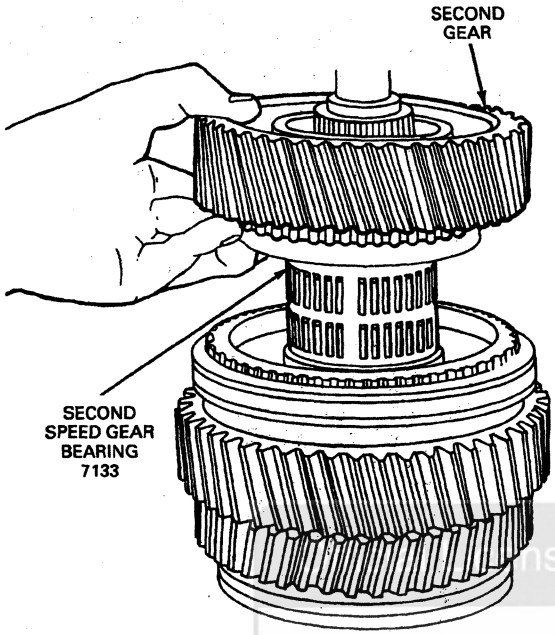

C8800-B

30. **CAUTION: Do not heat the thrust washer for more than 15 minutes.**

    Heat the thrust washer to 160°C (320°F) with Rotunda Precision Metal Gear / Bearing Heater 164-R3900 or equivalent.

31. Position the thrust washer on the mainshaft and tap it down until it seats against its stop on the mainshaft. If necessary, gently tap the thrust washer to fully seat it.

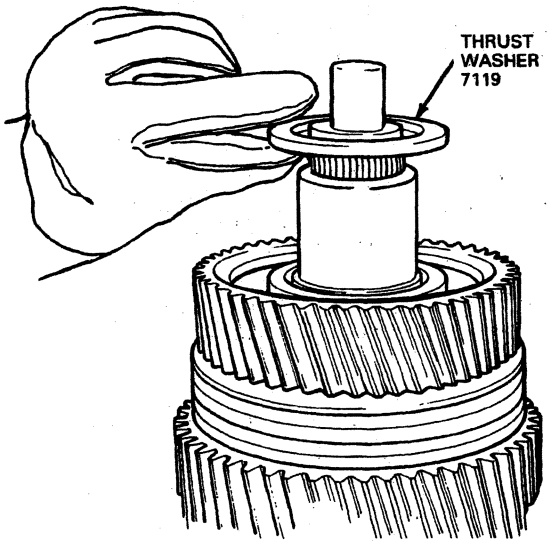

C8801-D

32. **CAUTION: Do not heat the input bearing spacer (7173) for more than 15 minutes.**

    Heat the 3rd-speed bearing spacer to 160°C (320°F) with Rotunda Precision Metal Gear / Bearing Heater 164-R3900 or equivalent.

33. Position the 3rd gear bearing spacer on the mainshaft and tap it down until it seats against its stop on the mainshaft. If necessary, gently tap the 3rd speed bearing spacer to fully seat it.

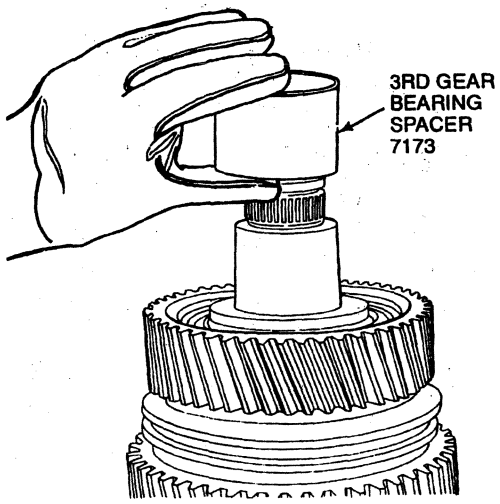

C8802-E

34. Check the end play of the 2nd gear. It must be between 0.15-0.45 mm (0.006-0.017 inch).

35. After the 3rd-speed bearing spacer has fully cooled, place the 3rd speed gear bearing over it.

Licensed Product Ford Motor Company

DISASSEMBLY AND ASSEMBLY OF SUBASSEMBLIES (Continued)

36. Place the 3rd gear over the 3rd-speed gear bearing on the mainshaft. The taper of the 3rd gear must face up.

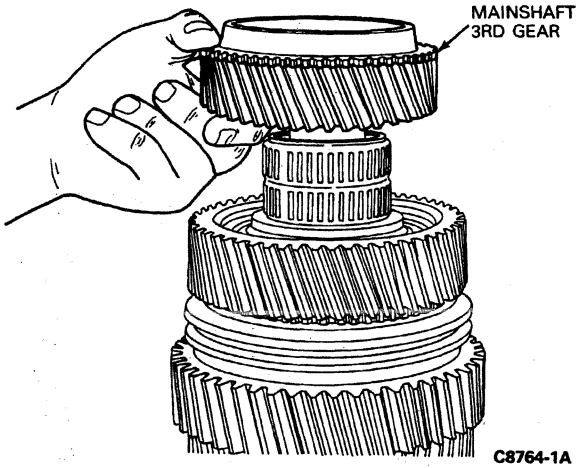

C8764-1A

37. Place the 3rd gear synchronizer ring (part of synchronizer) on the taper of the 3rd gear.

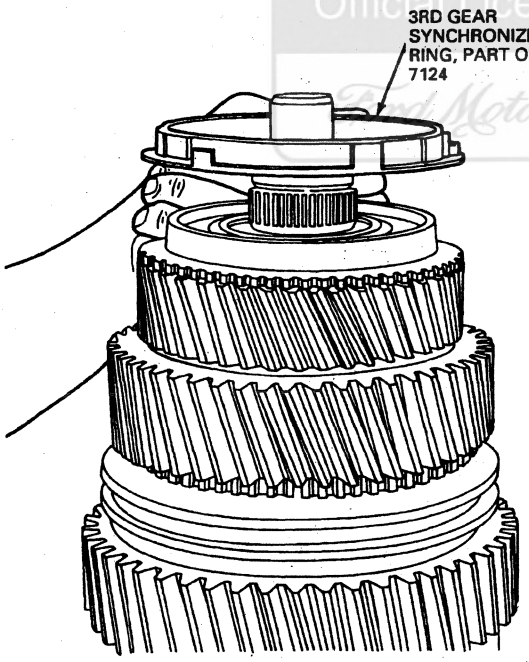

C8763-B

38. **CAUTION: Do not heat the synchronizer for more than 15 minutes.**

Heat the 3rd-4th synchronizer body with Rotunda Precision Metal Gear / Bearing Heater 164-R3900 or equivalent to a maximum 160°C (320°F). Position the synchronizer body on the mainshaft so that the short lugs on the synchronizer ring (part of synchronizer) engage in the shallow gaps in the synchronizer body. Lightly tap the synchronizer body down until it stops against the synchronizer ring (part of synchronizer). The recess in the synchronizer body must face upwards.

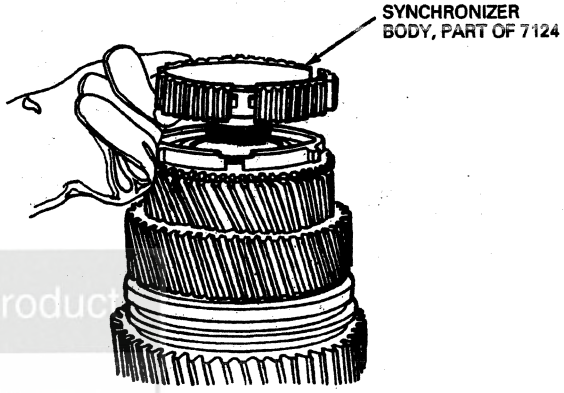

C8803-D

Official Licensed Product Ford Motor Company

DISASSEMBLY AND ASSEMBLY OF SUBASSEMBLIES (Continued)

39. Install a new snap ring on the mainshaft next to the 3rd-4th synchronizer body (part of small parts repair kit). Clearance between the snap ring and the synchronizer body should not be more than 0.1 mm (0.004 inch).

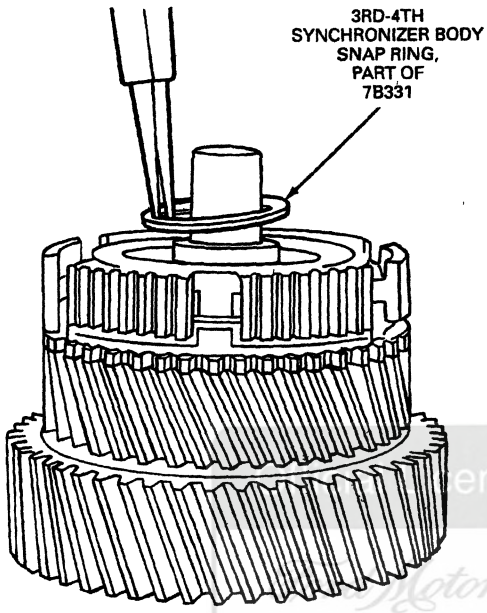

C8759-B

40. Check the end play of the 3rd gear. It must be between 0.15 and 0.35 mm (0.00591 and 0.01378 inch).
41. Position the sliding sleeve over the synchronizer body (both part of synchronizer) with the smaller of the two grooves facing down. In three positions on the sliding sleeve, three teeth have been cut away. Align these three areas with the three shallow gaps in the synchronizer body and the three lugs on the synchronizer ring (part of synchronizer). Slide the sliding sleeve (part of synchronizer) down until it rests against the 3rd gear.
42. **CAUTION: If the original springs are not being replaced, inspect them before reuse. Refer to Synchronizer Compression Spring Tension Check in the Cleaning and Inspection portion of this section for procedure.**

    Insert three compression springs with each pressure piece (part of small parts repair kit) in the recesses of the synchronizer body.

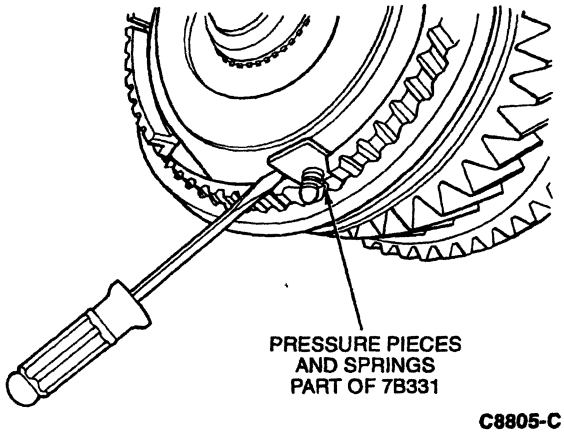

C8805-C

43. NOTE: The short lugs on the synchronizer ring (part of synchronizer) should be located over the shallow gaps in the 3rd-4th synchronizer body.

    Place the 4th gear synchronizer ring (part of synchronizer) on the synchronizer body.

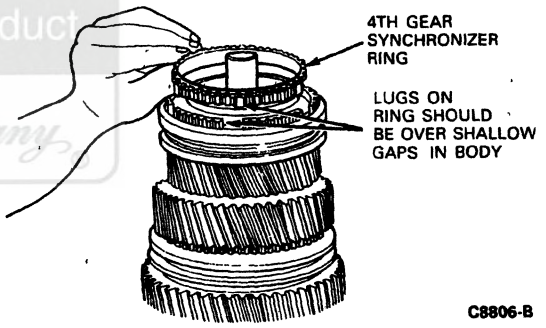

C8806-B

Licensed Product Ford Motor Company

DISASSEMBLY AND ASSEMBLY OF SUBASSEMBLIES (Continued)

44. Push the synchronizer ring downwards while pulling the sliding sleeve (both part of synchronizer) into the center position.

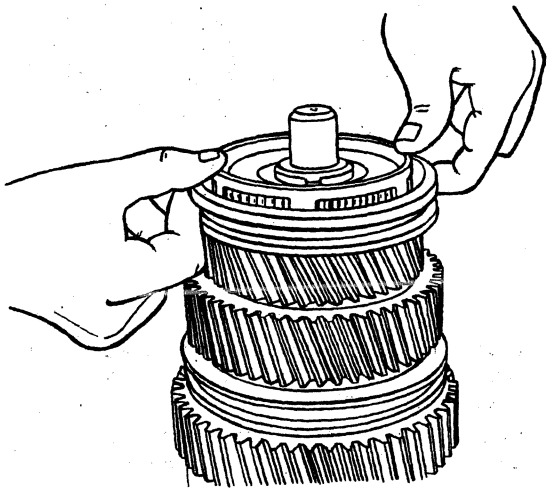

C8807-B

45. **CAUTION: Do not heat the input shaft pocket bearing for more than 15 minutes.**

    CAUTION: If necessary to drive the input shaft pocket bearing on, drive against the inner race only. Do not drive against the bearing cone.

    Heat the inner race of the input shaft pocket bearing to 160°C (320°F) with Rotunda Precision Metal Gear / Bearing Heater 164-R3900 or equivalent. Position it on the mainshaft and drive it on if necessary until it seats against its stop on the mainshaft.

An alternate method is to press the input shaft pocket bearing on using Inner Pinion Bearing Cone Replacer T85T-4621-AH.

C8808-C

Bearing, Countershaft

SPECIAL SERVICE TOOL(S) REQUIRED

Description	Tool Number
Countershaft Bearing Remover	T96T-7025-A
Steering Pump Pulley Remover	T69L-10300-B

Disassembly

1. NOTE: Do not attempt service procedures on the gears of countershaft cluster gear (7113). Only the bearings can be serviced.

   NOTE: Use brass pads or equivalent to prevent damage.

   NOTE: This procedure can also be used to replace the other countershaft bearing.

   Position countershaft cluster gear in a vise clamping onto 5th gear (part of countershaft cluster gear).

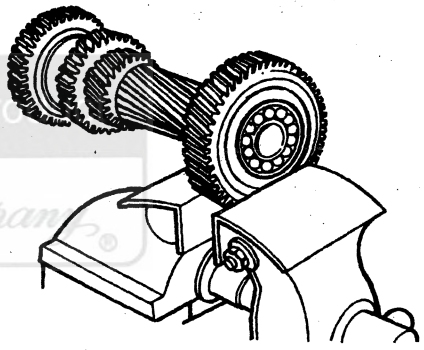

C10831-B

2. Place puller device, such as Pinion and Carrier Bearing Puller D81L-4220-A or equivalent over the inner ring of the output shaft bearing (7065) located at the output end of the countershaft cluster gear. Turn the knurled ring on the tool to secure it to the ring on the output shaft bearing.

Official Licensed Pro... Company

DISASSEMBLY AND ASSEMBLY OF SUBASSEMBLIES (Continued)

3. Position Bearing Pulling Attachment D79L-4621-A or equivalent over the gripper tool and remove the output shaft bearing from the countershaft.

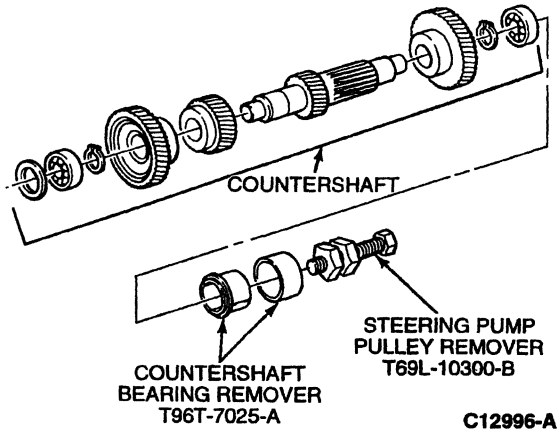

Assembly

1. **CAUTION: Maximum heating time is 15 minutes.**

   Using Rotunda Heat Gun 107-R0300 or equivalent, heat the output shaft bearing not to exceed 160°C (320°F).
2. Install output shaft bearing on end of countershaft cluster gear and drive it to its axial stop.

ASSEMBLY

Transmission

SPECIAL SERVICE TOOL(S) REQUIRED

Description	Tool Number
Gear Pack Holding Fixture	T87T-7025-HH
Shift Rod Support	T87T-7025-JH
Bench Mounted Holding Fixture	T57L-500-B
Output Seal Replacer	T87T-7025-LH
Rear Seal Replacer	T87T-7025-BH
Remover Tube	T77J-7025-B
Companion Flange Holding Tool	T78P-4851-A
Locknut Socket	T87T-7025-AH

NOTE: Any time the transmission (7003) is serviced check the following items:

- Confirm that the front bearing oil baffle is installed in the input shaft synchronizer cone recess.
- Visually inspect the front bearing oil baffle for tears or damage.
- The front bearing oil baffle is recessed 6 mm (+1 -0 mm) (0.24 inch [+0.04 -0 inch]) below the synchronizer cone edge.
- The front bearing oil baffle fits tight and cannot be moved by hand.
- The three lubrication holes in the input shaft (7017) are free of any obstruction.
- The oil channel (in the main case) to the bearing (7025) is free of any obstruction.
- The oil baffle (part of the shim pack) behind the outer race of the bearing is free of damage.
- The synchronizer body snap ring forward of the 3rd-4th synchronizer package on the mainshaft is in position.

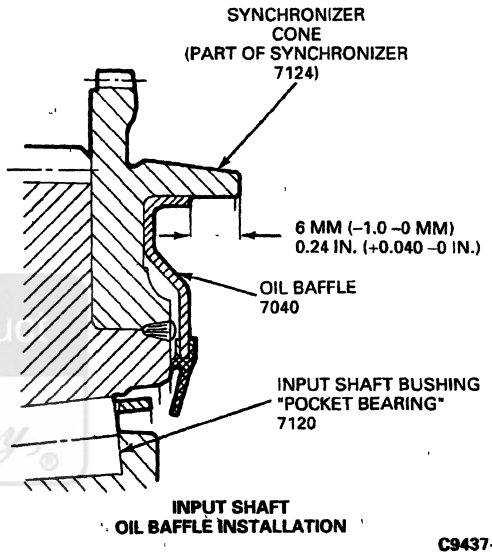

1. Place the input shaft end over the input shaft pocket bearing on the input end of the mainshaft.

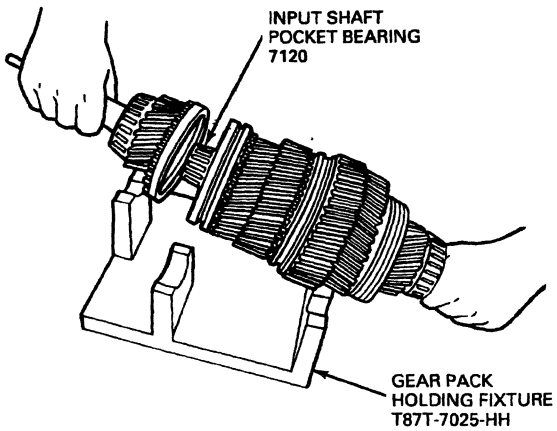

Official Licensed Product Ford Motor Company

ASSEMBLY (Continued)

2. Place the mainshaft and input shaft on the Gear Pack Holding Fixture T87T-7025-HH. Place the countershaft cluster gear (7113) on the fixture and mesh the gears of the mainshaft and countershaft cluster gear.

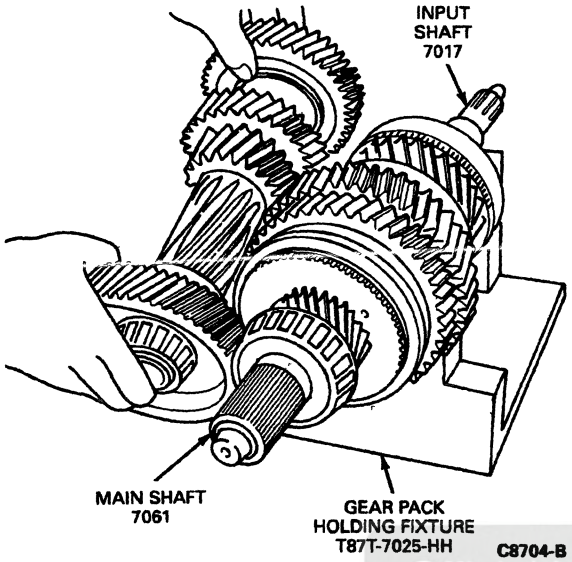

C8704-B

3. Place the three shift rails and forks into the Shift Rod Support T87T-7025-JH in the position from which they were removed during disassembly.
4. Position the three shift rail assemblies together with the shift rod support tool and gear selector interlock plate so that the gear shifter forks (7230) engage in the correct sliding sleeves (part of mainshaft synchronizer (7124)).

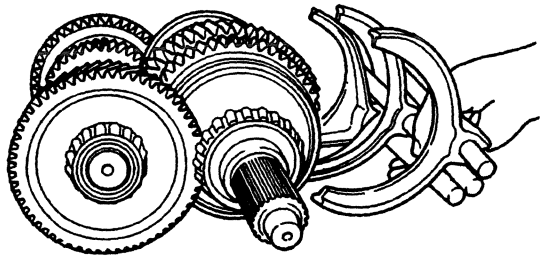
C8705-B

5. Place the gear selector interlock plate on the three shift rails and engage it in the grooves of the gear selector interlock plate in the main shift rail.

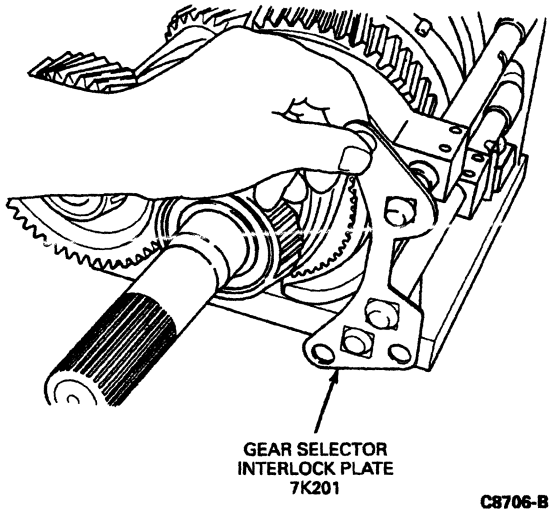

C8706-B

6. Install spacer onto output shaft.

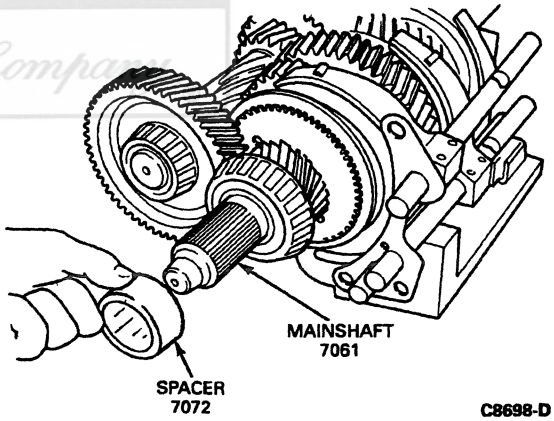

C8698-D

7. Secure the extension housing (7A039) into the Bench Mounted Holding Fixture T57L-500-B.

Official Licensed Product Ford Motor Company

ASSEMBLY (Continued)

8. Position Endless Lifting Sling D87L-1000-A or equivalent around the shift rails, the holding fixture and the mainshaft and countershaft cluster gear. Position the gear pack into the extension housing and push the mainshaft and countershaft cluster gear and rails forward until the output shaft rear bearing (7R205) and output shaft bearing (7065) seat in their outer races in the extension housing and the shift rails slide into their retaining holes in the extension housing.

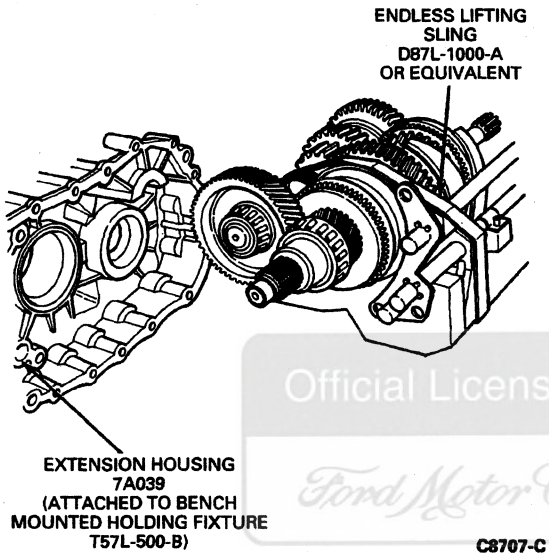

9. Rotate the gear pack and extension housing upwards 90 degrees so it is in a vertical position with the input shaft pointing upwards.

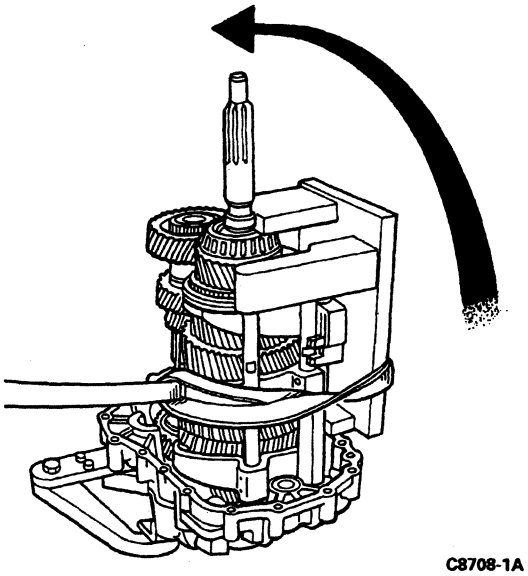

10. If equipped, slide the output flange onto the end of the mainshaft until it seats against its stop. Screw the spiral lock output yoke lock nut onto the mainshaft until it is finger-tight.

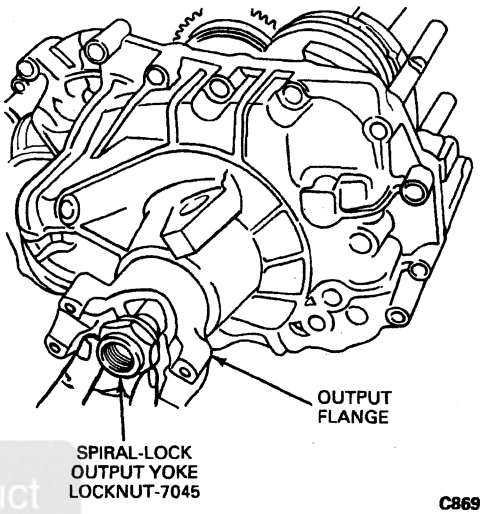

11. Remove the Shift Rod Support T87T-7025-JH.

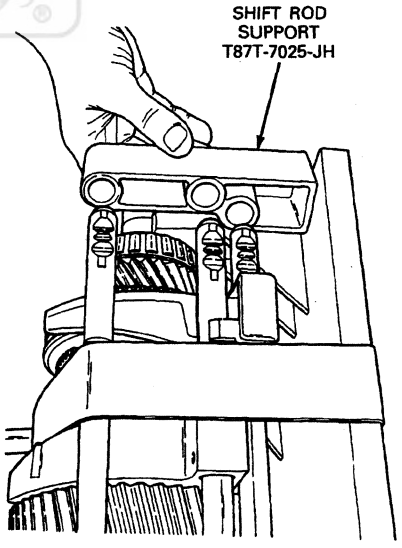

Official Licensed Product
Ford Motor Company

ASSEMBLY (Continued)

12. Remove the strap and remove the gear pack holding fixture from the mainshaft and countershaft cluster gear.

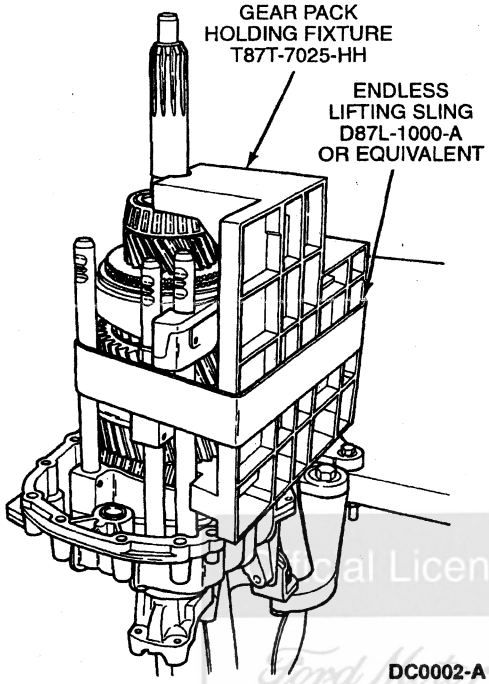

DC0002-A

13. Attach the three capscrews that secure the shift interlock to the rear transmission housing. Tighten them to 10 N·m (7 lb-ft). Be sure that the interlock moves freely after tightening the screws.

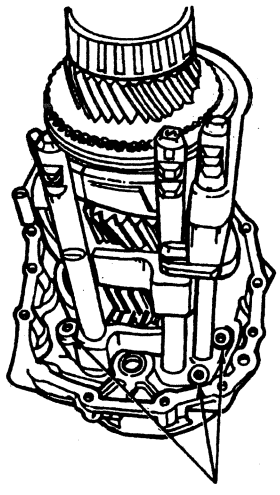

C8692-B

14. Engage the teeth of the reverse idler gear with the reverse gear. Slide the reverse idler gear shaft (7140) downward through the reverse idler gear bearings and into the extension housing. Align the lower of the two threaded holes in the reverse idler gear shaft with the bore in the extension housing. Place a sealing ring on the reverse idler shaft bolt and attach through the bore in the case (7005) into the reverse idler gear shaft. Tighten the screw finger-tight.

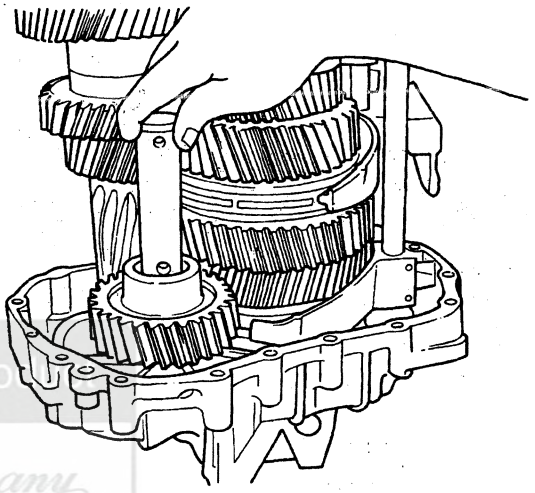

C8710-B

15. Insert the main shift rail with shift finger fork into its bore in the extension housing.

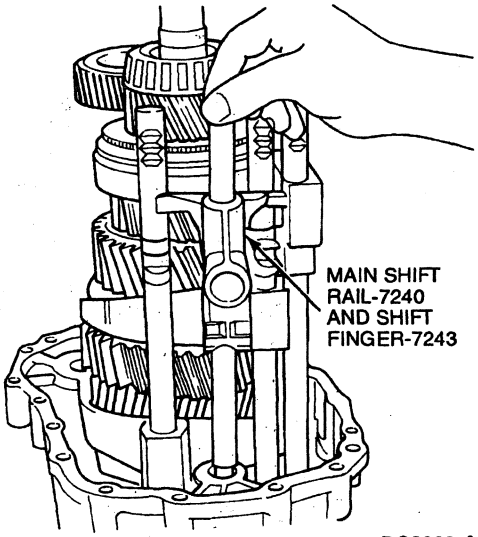

DC0003-A

Ford Motor Company

ASSEMBLY (Continued)

16. If the magnet was removed during disassembly, insert it in the recess in the extension housing.

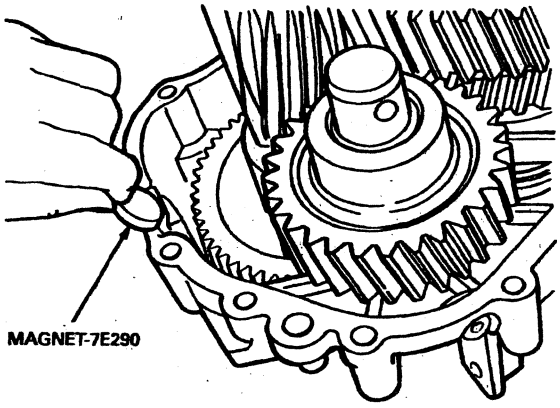

C8711-B

17. **CAUTION: The tapered roller bearing preload should be adjusted if either the case or extension housing, countershaft cluster gear, mainshaft, input shaft, or a bearing has been replaced. If the tapered roller bearings on the mainshaft, input shaft, or countershaft cluster gear have to be adjusted, do not apply Gasket Maker E2AZ-19562-B or equivalent meeting Ford specification WSK-M2G348-A50.**

CAUTION: Do not use a silicone sealing compound.

NOTE: Do not wait longer than ten minutes to tighten all 17 bolts, due to the rapid curing time of the sealant.

If the tapered roller bearings do not have to be adjusted, thinly coat the sealing surface of the extension housing with Gasket Maker E2AZ-19562-B or equivalent meeting Ford specification WSK-M2G348-A5.

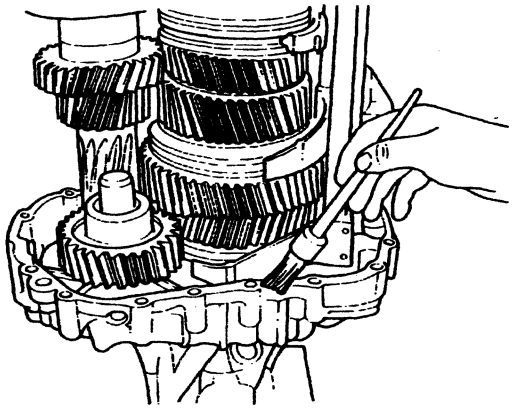

C8712-1A

18. **CAUTION: Make sure that the shift rail bearings do not obstruct entry of the shift rails.**

If removed, push the three shift rail bearings back into their holes in the case.

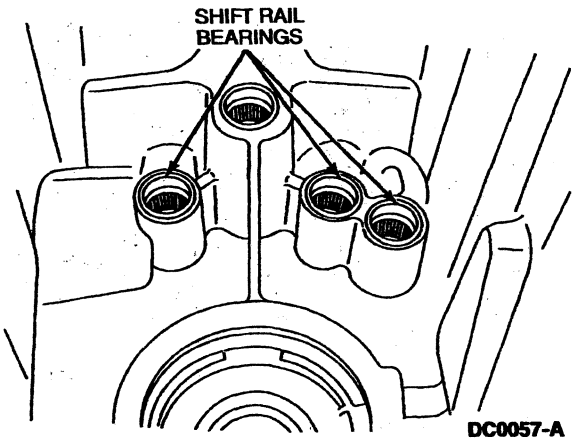

DC0057-A

19. **CAUTION: Be careful that the input shaft does not damage the input shaft seal and extension housing seal. Also be careful that the oil baffle is not bent when the case is positioned over the input shaft.**

Carefully place the case over the mainshaft and countershaft cluster gear and shift rails until it rests on its mating surface on the extension housing. It may be necessary to push the 5th-reverse shift rail inward to clear the inner surfaces of the case.

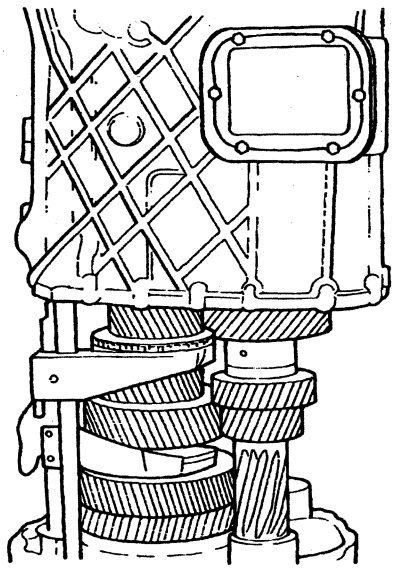

C9019-1A

ASSEMBLY (Continued)

20. Drive in the two dowels that align the extension housing and the case. Next, insert two hex screws and tighten them finger-tight.

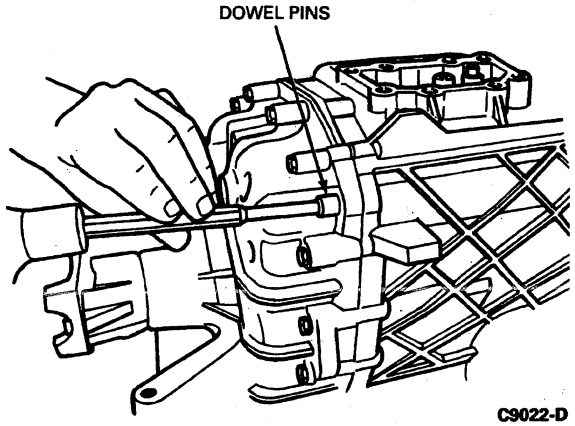

C9022-D

21. NOTE: If it is not necessary to adjust the mainshaft / input shaft preload, install all of the hex screws that attach case to extension housing and tighten to 23 N·m (17 lb-ft).

    Screw two additional hex screws into the bores of extension housing near the mainshaft and countershaft cluster gear finger-tight.

22. **CAUTION: The tapered roller bearing preload should be adjusted if either the case to extension housing, countershaft cluster gear, mainshaft, input shaft or a bearing has been replaced. Refer to Adjustments in this section.**

    NOTE: The rear case reverse idler shaft bolt was installed finger-tight earlier.

    Fit sealing ring to the remaining reverse idler shaft shift rod bolt. Install the screw into the bore in the case and tighten both reverse idler shaft bolts to 22 N·m (16 lb-ft).

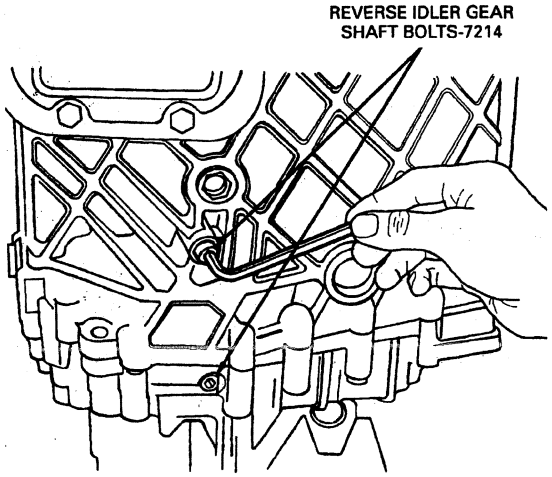

C8684-B

23. Rotate the transmission so the input shaft is pointing down.

Official Licensed Product Ford Motor Company

ASSEMBLY (Continued)

24. On 4x2 transmissions (except F-Super Duty), remove the hex nut that secures the output flange to the mainshaft, then remove the flange from the mainshaft. Position the oil seal (7052) on Output Seal Replacer T87T-7025-LH and position the oil seal and tool in the opening in the extension housing. Apply a little liquid soap around the circumference to minimize friction. Using a soft hammer, gently tap the Rear Seal Replacer T87T-7025-BH until it seats in the opening.

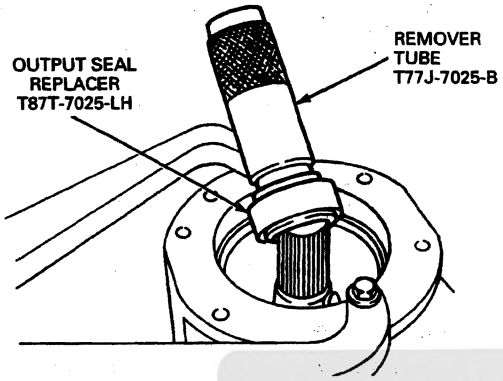

4 x 4 AND F-SUPER DUTY TRANSMISSION REAR OIL SEAL INSTALLATION

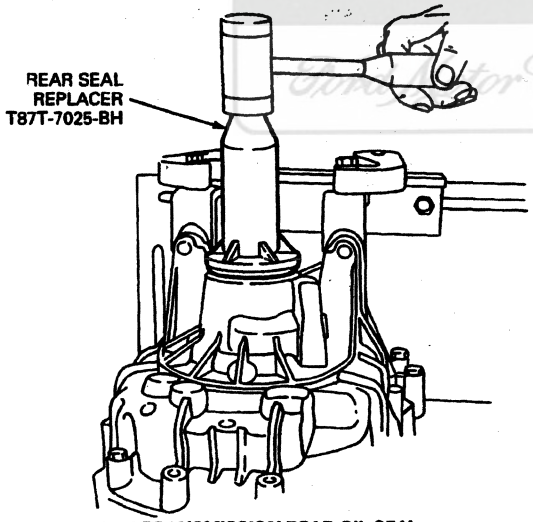

4 x 2 TRANSMISSION REAR OIL SEAL INSTALLATION (EXCEPT F-SUPER DUTY) **C8715-C**

25. On 4x4 and F-Super Duty transmissions, use Output Seal Replacer T87T-7025-LH and Remover Tube T77J-7025-B to install the oil seal. Gently tap on tube with a soft hammer until tool seats against its stop.

26. **CAUTION: Do not reuse the output yoke lock nut after any servicing of the transmission. Always replace it with a new one.**

On 4x2 transmissions (except F-Super Duty), reinstall the output flange on the mainshaft. Install Companion Flange Holding Tool T78P-4851-A. Install a new spiral lock output yoke lock nut onto the mainshaft using Locknut Socket T87T-7025-AH. Tighten the output yoke lock nut to 270 N·m (200 lb-ft).

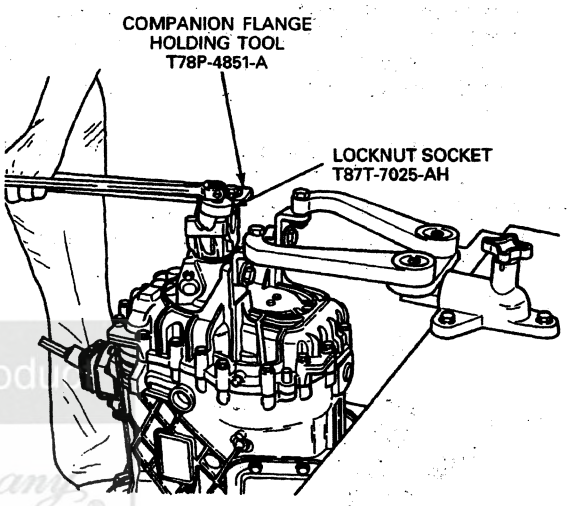

C8678-C

27. If required, install new PTO cover and gasket over the opening in the case using the original attaching screws which have self-sealing threads and tighten to 38 N·m (28 lb-ft).

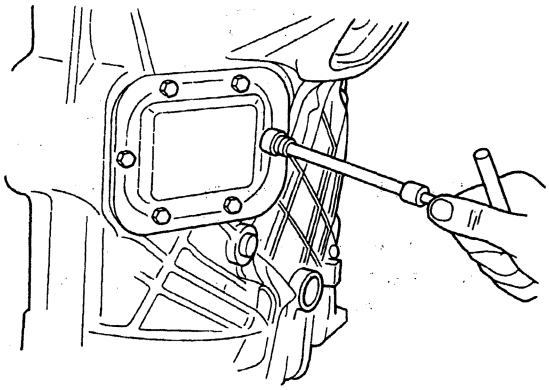

C8716-1A

Licensed Product Ford Motor Company

ASSEMBLY (Continued)

28. **CAUTION: The procedure must be followed exactly to make sure that the interlock function operates properly.**

    NOTE: Make sure that the interlock plate and shifter interlock spring (7234) do not drop into the case.

    Position the 5th-reverse gear interlock plate into its installed position as shown in the illustration following Step 30. Place the gasket over the mating surface of shift control housing in the case.

    Make sure that the stop plate moves freely and that the gasket does not interfere with it. The interlock plate must be in a position which is lower than the gasket so that the plate may move freely.

29. Unloaded length of shifter interlock spring is 35.5 mm (1.398 inch) minimum.

30. Place the shifter interlock spring above the nose in the interlock plate and move both parts into their installed positions.

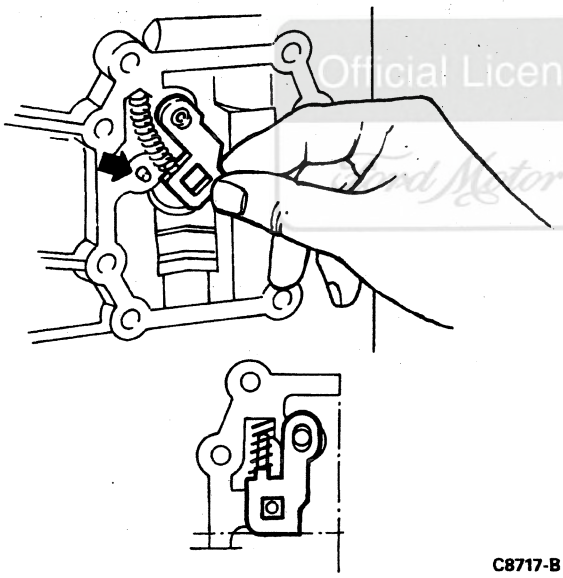

C8717-B

31. **CAUTION: Do not force the shift lever to shift into reverse. Damage to the interlock components could occur.**

    Install the shift lever housing. Make sure gasket is positioned correctly.

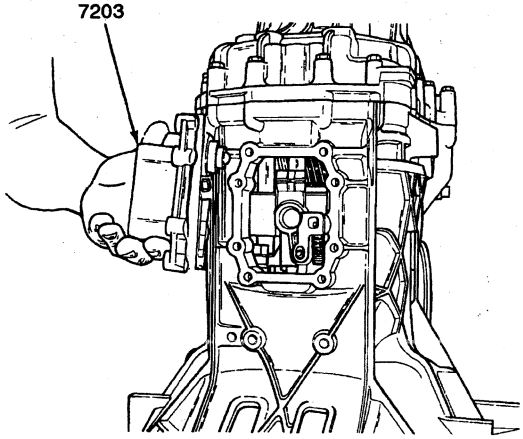

C8718-D

32. Check the functioning of the interlock:
    a. Temporarily install the shift lever. The nose on the shift lever located just above the ball must point toward the interlock plate. Install spring washers and tighten screws to 22 N·m (16 lb-ft).
    b. The shift lever cannot be shifted between fifth and reverse if the interlock was properly installed.
    c. Once proper installation of the interlock is confirmed, remove shift lever.

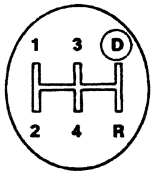

C8719-1A

Official Licensed Product
Ford Motor Company

ASSEMBLY (Continued)

33. A compression spring is installed into each of the three detent bolts. The positions are shown in the illustration. Before installing the springs, check that their unloaded length is 44.1 mm (1.736 inch).

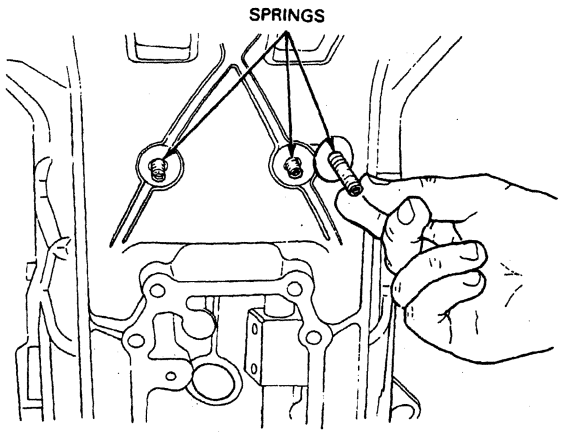

C8683-1A

34. **CAUTION: Do not strike detent spring plug in center as such an action can cause the detent spring plug to cave in which will result in leakage.**

    Vehicles have revised detent spring plugs on the housing. New detent spring plugs have a 14 mm diameter versus the old 10 mm diameter. Now detent spring plugs should be installed using a 14 mm punch. There is no longer a need to measure the depth of the detent spring plug when installing it due to a positive stop in the housing to which the detent spring plug will be driven.

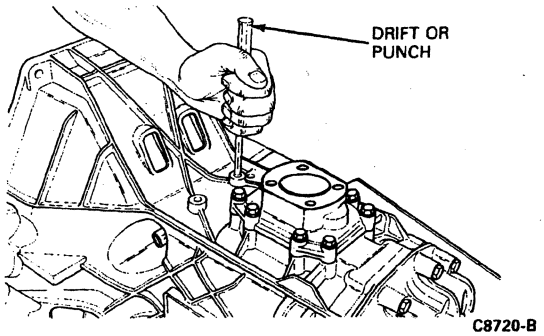

C8720-B

35. If removed, install the backup lamp switch (15520) with a new sealing ring into its mounting boss on the side of the transmission near the ID plate. Tighten the switch to 20 N·m (15 lb-ft).

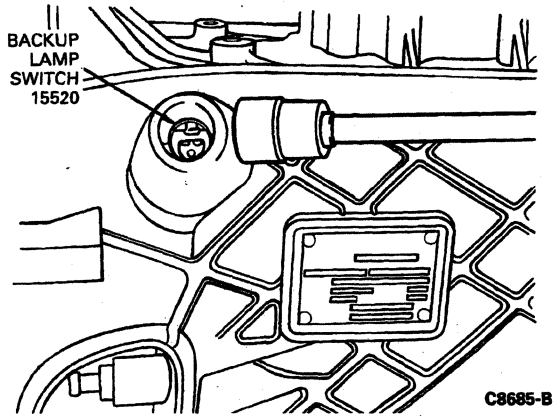

C8685-B

INSTALLATION

Shift Lever and Boot

1. Insert the shift lever boot in its upright position in the cover of shift lever.

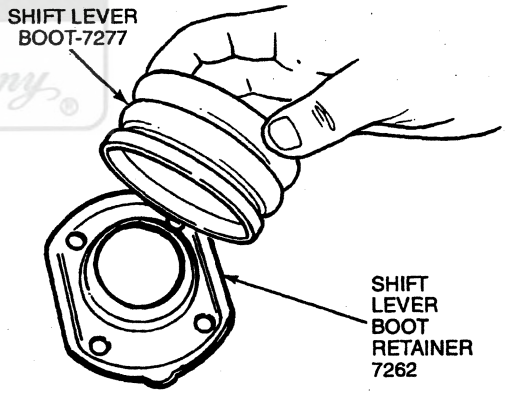

C8731-C

2. Using a screwdriver, install the snap ring inside the shift lever boot so that the shift lever boot and ring will be secured in the groove in the shift lever boot retainer.
3. Slide the shift lever boot and cover as an assembly on past the shift lever.
4. Place the two guide pieces on the lugs on the cardan joint. The slotted ends of the guide pieces should be located near the cover pointing inwards toward the shift lever.

INSTALLATION (Continued)

Extension Housing — Shift Rail Bearing, Countershaft and Mainshaft Bearing Outer Race

SPECIAL SERVICE TOOL(S) REQUIRED

Description	Tool Number
Needle Bearing Replacer	T87T-7025-DH
Driver Handle	T80T-4000-W
Bearing Cup Replacer	T73T-4222-A
Mainshaft Front Bearing Cup Replacer	T87T-7025-PH

1. If removed, install the central shift rail bearing into the extension housing (7A039). Heat the extension housing in the area of the bearing bore to 160°C (320°F) with Rotunda Heat Gun 107-R0300 or equivalent. Insert the ball sleeve and drive the bearing in until it seats against its stop using Needle Bearing Replacer T87T-7025-DH and Driver Handle T80T-4000-W.

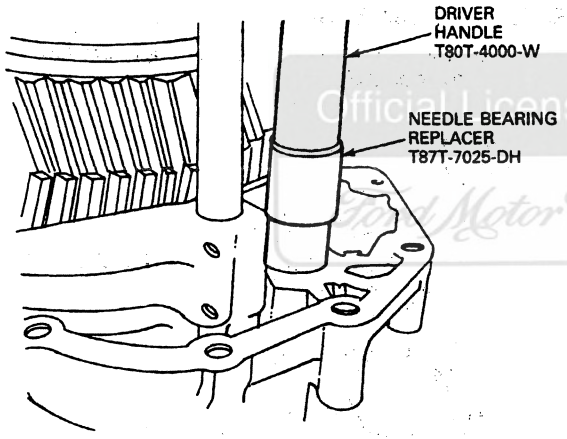

C8741-1A

2. Heat the extension housing in the area of the countershaft rear bearing outer race to 160°C (320°F) with Rotunda Heat Gun 107-R0300 or equivalent. With Driver Handle T80T-4000-W and Bearing Cup Replacer T73T-4222-A, drive the countershaft bearing cup into its bore until it seats against its stop.

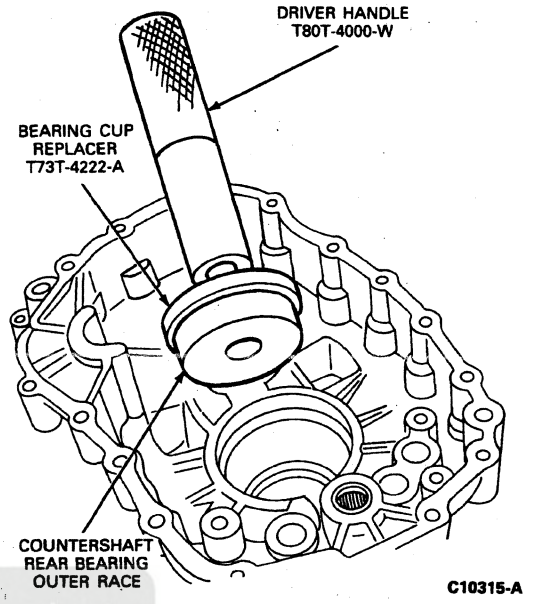

C10315-A

3. NOTE: Do not install the oil seal (7052) at this time. The oil seal is installed just prior to installing the output flange.

   Heat the extension housing in the area of the mainshaft outer race to 160°C (320°F) with Rotunda Heat Gun 107-R0300 or equivalent. Using Driver Handle T80T-4000-W and Mainshaft Front Bearing Cup Replacer T87T-7025-PH, drive the bearing cup into its bore until it seats against its stop.

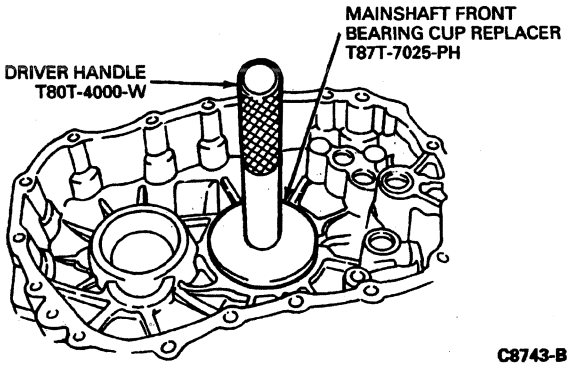

C8743-B

Official Licensed Product Ford Motor Company

INSTALLATION (Continued)

Rear Seal

SPECIAL SERVICE TOOL(S) REQUIRED

Description	Tool Number
Rear Seal Replacer	T87T-7025-BH
Companion Flange Holding Tool	T78P-4851-A
Locknut Socket	T87T-7025-AH

1. Position the oil seal (7052) on Rear Seal Replacer T87T-7025-BH and position the oil seal and tool over the output end of the mainshaft.
2. Apply a little liquid soap around the circumference to minimize friction. Using a soft hammer, gently tap the Rear Seal Replacer T87T-7025-BH until it seats in the opening.
3. Install the output flange on the output end of the mainshaft.
4. Attach Companion Flange Holding Tool T78P-4851-A to the transmission output flange with four hex bolts.
5. **CAUTION: Do not reuse the output flange retaining nut after any servicing of the transmission (7003). Always replace it with a new one.**

   Install a new output flange retaining nut (F3TZ-7045-A) on the mainshaft with Locknut Socket T87T-7025-AH. Tighten the nut to 270 N·m (200 lb-ft). Remove the flange holding tool after tightening the nut.
6. Connect the driveshaft to the output flange. Refer to Section 05-01.

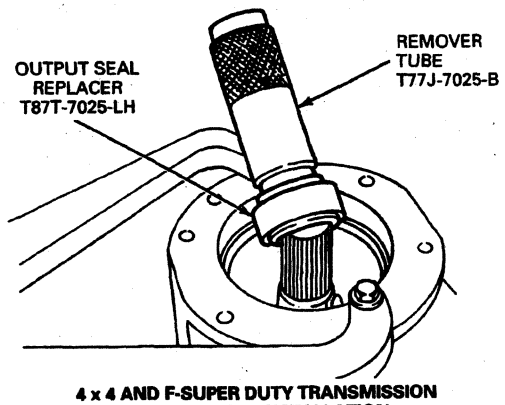

4 x 4 AND F-SUPER DUTY TRANSMISSION REAR OIL SEAL INSTALLATION

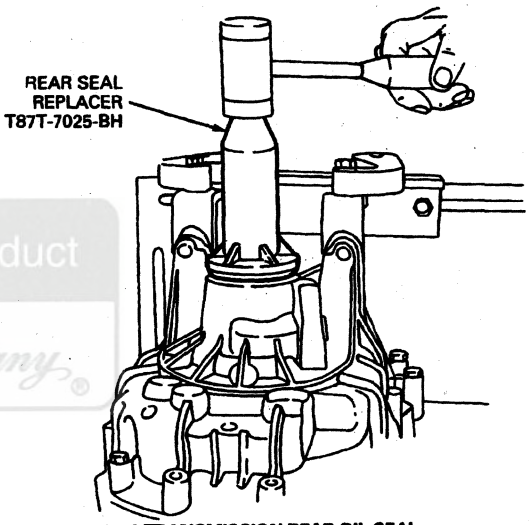

4 x 2 TRANSMISSION REAR OIL SEAL INSTALLATION (EXCEPT F-SUPER DUTY) C8715-C

Official Licensed Product

Transmission (4x2)

1. Place the transmission (7003) on a transmission jack such as Rotunda Low Lift Transmission Jack 164-R3506 or equivalent. Secure the transmission to the jack. Install guide studs in the engine (6007) and raise the transmission until the splines of input shaft (7017) are aligned with the splines of clutch disc (7550). The clutch release hub and bearing must be properly positioned in the clutch release lever (7515).
2. Slide the transmission forward on the guide studs until it is in position on the engine. Install the attaching bolts and tighten them to 53-72 N·m (39-53 lb-ft). Remove the guide studs and install the two remaining attaching bolts.

INSTALLATION (Continued)

3. Install the transmission support crossmember (6A023) as described in Section 02-03. Position the insulator and retainer between the transmission and transmission support crossmember. Install bolts and tighten to 60-80 N·m (45-60 lb-ft).Install the nut retaining the insulator and retainer to transmission support crossmember. Tighten to 68-94 N·m (50-70 lb-ft). Remove the transmission jack.
4. Connect the clutch linkage. Refer to Section 08-02.
5. Connect the backup lamp switch (15520).
6. On F-Super Duty series vehicles, install the transmission parking brake. Refer to Section 06-05 in the Body, Chassis Manual.
7. Install the driveshaft. Refer to Section 05-01.
8. Fill the transmission with Motorcraft MERCON® ATF XT-2-QDX or -DDX or MERCON® equivalent. Remove safety stands and lower the vehicle.

   For vehicles equipped with 7.3L diesel engine, use Synthetic Motorcraft MERCON® ATF XT-2-QDX or MERCON® equivalent.
9. On diesel engines, install bolt retaining engine charge exhaust pipe to transmission housing. Tighten bolt to 54-68 N·m (40-50 lb-ft).
10. **CAUTION: Do not use any sealant on gasket.**

    Place a new, dry gasket on the upper surface of the shift lever housing. Place the shift lever with the attached guide pieces into the guide piece grooves. The slotted ends of these guide pieces must face upward.

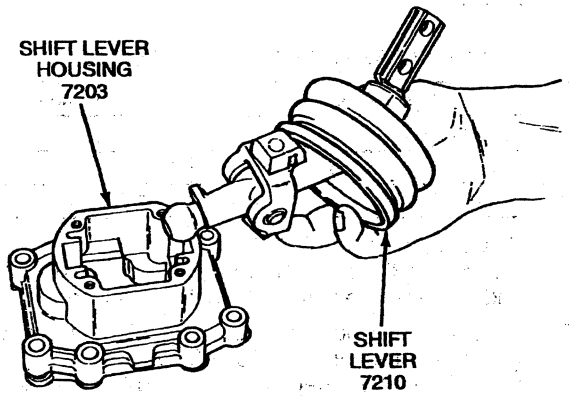

C8727-C

11. Tighten the four Allen-head capscrews that secure the shift lever boot retainer to the shift lever housing to approximately 10 N·m (7 lb-ft).
12. Install the upper shift lever to the lower shift lever and tighten the two retaining screws to 22-33 N·m (16-24 lb-ft).
13. Install the inner shift lever boot and the shift lever boot retainer to the opening cover of transmission.
14. Install the shift lever knob on the upper shift lever if removed.

INSTALLATION (Continued)

Manual Transmission Assembly

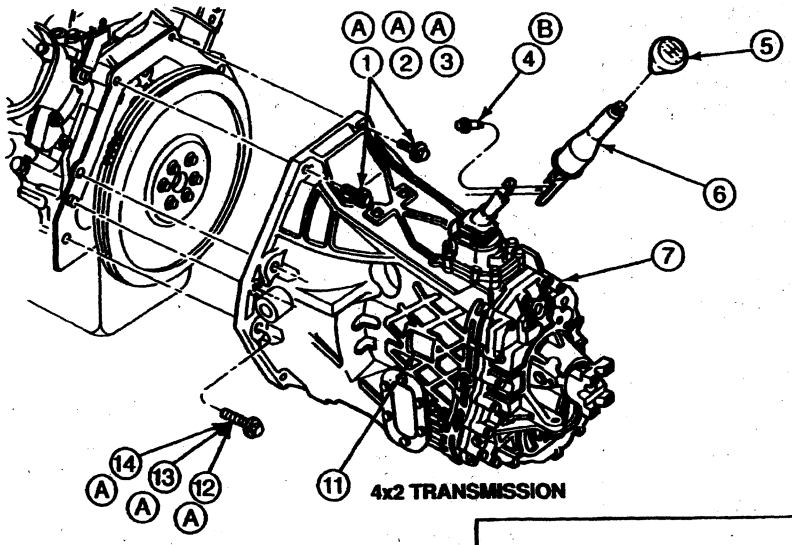

4x2 TRANSMISSION

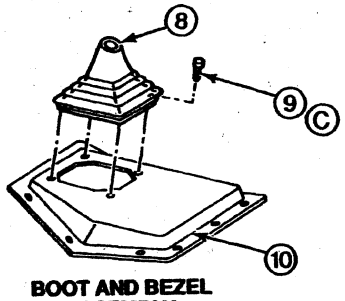

BOOT AND BEZEL ASSEMBLY

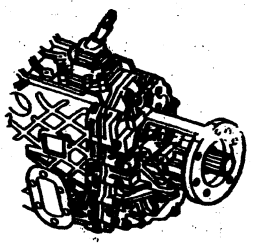

4X4 TRANSMISSION SAME AS 4X2 TRANSMISSION EXCEPT AS SHOWN

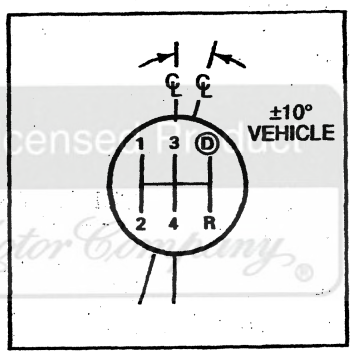

Official Licensed Product
Ford Motor Company

C11502-D

Item	Part Number	Description
1	385739	Bolt, 7/16-14 x 1.62; 4.9L/5.8L
2	57661	Bolt, 7/16-14 x 1.5; 7.5L
3	N808234	Bolt, M12-1.75 x 70; 7.3L
4	N801010-S101	Bolt
5	7213	Shift Lever Knob
6	7210	Shift Lever
7	7003	Transmission
8	7277	Shift Lever Boot
9	N610959	Bolt
10	12110	Transmission Floor Cover Plate

(Continued)

Item	Part Number	Description
11	—	Transmission I.D. Plate (Part of 7003)
12	57664	Bolt, 7/16-14 x 2.25; 4.9L/5.8L
13	57666	Bolt, 7/16-14 x 2.75; 7.5L
14	N808235	Bolt, M12-1.75 x 110; 7.3L
A	—	Tighten to 53-72 N-m (39-53 Lb-Ft)
B	—	Tighten to 22-33 N-m (16-24 Lb-Ft)
C	—	Tighten to 5-9 N-m (44-80 Lb-In)

INSTALLATION (Continued)

Transmission (4x4)

1. Place the transmission (7003) on a transmission jack such as Rotunda Low Lift Transmission Jack 164-R3900 or equivalent, and install two guide studs in the transmission front case top holes, to guide the transmission into position. Join together the transmission and engine block mating surfaces.
2. Install the two lower bolts and tighten to 54-68 N·m (40-50 lb-ft). Remove the guide studs and install the upper bolts.
3. Place the rear support bracket in position and install the retaining bolts. Refer to Section 02-03. Tighten the bolts to 60-80 N·m (45-60 lb-ft).
4. Install the two bolts at the rear support insulator bracket. Remove the transmission jack.
5. Position the transfer case (7A195) on the transmission jack. Position the transfer case on the transmission, using care to guide the transfer case shift lever through the opening in the floor pan. Install the gasket and six retaining bolts. Tighten the bolts to specifications listed in Section 07-07A, Section 07-07B or Section 07-07C in this manual.
6. Install the front driveshaft (4602).
7. Install the rear driveshaft.
8. NOTE: For vehicles equipped with 7.3L diesel engine, use Synthetic Motorcraft MERCON® ATF XT-2-QDX or MERCON® equivalent.

   Fill transfer case and transmission with Motorcraft MERCON® ATF XT-2-QDX or -DDX or MERCON® equivalent.
9. Connect the backup lamp switch (15520).
10. Install engine charge exhaust pipe and extension pipe.
11. Install nuts retaining extension pipe to muffler and pipe assembly. Tighten nuts to 23-33 N·m (17-24 lb-ft).
12. Remove safety stands and lower vehicle.
13. Place a new, dry gasket on the upper surface of the shift lever housing. Place the shift lever with the attached guide pieces into the guide piece grooves. The slotted ends of these guide pieces must face upward.
14. **CAUTION: Do not use any sealant on gasket.**

    Tighten the four Allen-head capscrews that secure the cover assembly to the gearshift housing to approximately 10 N·m (7 lb-ft).

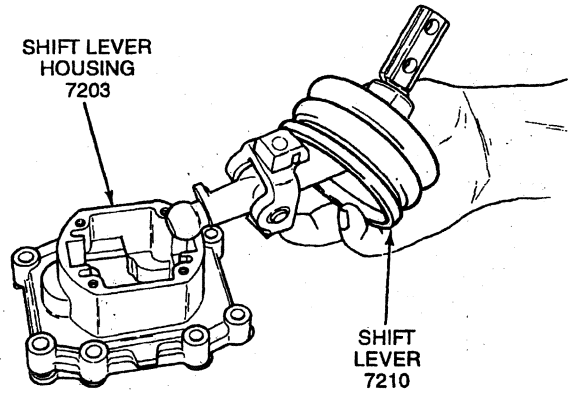

C8727-C

15. Install the upper shift lever to the lower shift lever and tighten the two retaining screws to 22-33 N·m (16-24 lb-ft).
16. Install the inner boot and the boot and bezel assembly to the transmission opening cover.
17. Install the shift ball on the upper shift lever if removed.

CLEANING AND INSPECTION

Transmission

Cleaning

1. NOTE: Do not clean, wash or soak transmission seals in cleaning solvent.

   Wash all parts, except seals, in a suitable cleaning solvent. Brush or scrape all foreign matter from the parts. Be careful not to damage any parts with the scraper. Dry all parts with compressed air.

Inspection

1. Inspect case (7005) for cracks, worn or damaged bores, damaged threads, or any other damage that could affect operation of the transmission (7003). Inspect the machined mating surfaces for burrs, nicks or damage.

Case Service

Inspect the case for cracks and stripped threads. Inspect the gasket surfaces and mating surfaces for burrs. Check the vent for obstructions, and check all fluid passages for obstructions and leakage.

Inspect the case bushing for scores. Check all parking linkage parts for wear or damage.

If a transmission case thread is damaged, service kits may be purchased from local jobbers. To service a damaged thread, the following procedure should be carefully followed:

1. Drill out the damaged threads, using the same drill size as the thread outside diameter. For example, use a 5/16-inch drill for a 5/16-18 thread.

CLEANING AND INSPECTION (Continued)

2. Select the proper special tap and tap the drilled hole. The tap is marked for the size of the thread being repaired. Thus, the special tap marked 5/16-18 will not cut the same thread as a standard 5/16-18 tap. It does cut a thread large enough to accommodate the insert, and after the insert is installed, the original thread size (5/16-18) is restored.
3. Select the proper coil inserting tool. These tools are marked with the thread size being repaired. Place the insert on the tool and adjust the sleeve to the length of the insert being used. Press the insert against the face of the tapped hole. Turn the tool clockwise and wind the insert into the hole until the insert is one-half turn below the face.
4. Working through the insert, bend the insert tang straight up and down until it breaks off at the notch.
5. Improperly installed inserts can be removed with the extractor tool. Place the extractor tool in the insert with the blade resting against the top coil one-quarter to one-half turn away from the end of the coil. Tap the tool sharply with a hammer until the blade cuts into the insert. Exert downward pressure on the tool and turn it counterclockwise until the insert is removed.

Extension Housing

Inspect the extension housing (7A039) for cracks. Make sure that the machined mating surfaces are free from burrs, nicks or any other damage. If necessary, replace the oil seal (7052) after the extension housing has been installed onto the transmission (7003).

Bearings

1. Rotate the bearings in a cleaning solvent until all lubricant is removed. Hold the bearing assembly to prevent it from rotating while drying it with compressed air.
2. Lubricate the bearings with approved transmission lubricant. Wrap them in a clean, lint-free cloth or paper, until ready for use.

Raceways

Bearings that have been removed using special service tools may have been damaged simply due to the tool design. Be sure the following checks are made to determine if the bearing can be put back into service.

- Inner Ring Raceway — While holding outer ring stationary, rotate inner ring at least three revolutions. Examine raceway of inner ring for pits or spalling. If pits or spalling are unacceptable, replace the bearing assembly. Light particle indentation is acceptable.
- Outer Ring Raceway — While holding inner ring stationary, rotate outer ring at least three revolutions. Examine raceway of the outer ring from the same side as the raceway of the inner ring. If raceway is spalled or pitted, similar to that shown, replace the bearing assembly. Light particle indentation is acceptable.

External Surfaces

The bearing must be replaced if damage is found in any of the following areas:

1. radial cracks on front and rear faces of outer or inner rings
2. cracks on outside diameter or outer ring (particularly around snap ring groove)
3. deformation or cracks in ball cage (particularly around rivets)

Spin Test

1. Lubricate bearing raceways with a slight amount of clean oil. Turn the bearing back and forth slowly until raceways and balls are coated with oil.
2. Hold bearing by inner ring in a vertical position. Vertical movement between the inner and outer rings is acceptable. Spin outer ring several times by hand (do not use compressed air). If roughness or vibration is noticeable or the outer ring stops abruptly, the bearing should be cleaned again and lubricated. Roughness in a bearing is usually caused by foreign particles in the bearing, which comes from inside the transmission case. If bearing is still rough after cleaning and relubricating three times, it must be replaced.
3. Hold bearing by the inner ring in a horizontal position. Spin outer ring several times by hand (do not use compressed air). If bearing is still rough after cleaning and relubricating three times (if not done in Step 2), it must be replaced. If bearing passes the visual inspection and spin tests, it can be reinstalled in transmission.

Official Licensed Product Ford Motor Company

CLEANING AND INSPECTION (Continued)

Gears

Inspect the teeth of each gear. If excessively worn, broken or chipped, replace the gear. Excessive wear increases backlash, which results in noise and unacceptable operating characteristics.

Output Shaft

Check output shaft for runout by mounting the shaft between V-blocks and applying Dial Indicator with Bracketry TOOL-4201-C to several places along shaft. The standard reading of the indicator for runout should be less than 0.05 mm (0.002 inch). If runout exceeds 0.05 mm (0.002 inch), replace shaft.

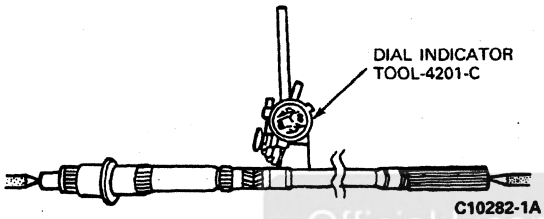

Input Shaft

Replace input shaft (7017) if splines are damaged. If needle bearing contact surfaces are worn, rough, or other bearing contact surfaces are damaged, replace input shaft.

Countershaft

Check countershaft gear teeth and countershaft splines for wear or damage. Replace countershaft if bent, scored, or worn.

Synchronizers

Synchronizer Ring/Synchronizer Body Wear Check

Inspect the internal surface for contact pattern. The contact pattern should be the same on the entire internal circumference of the ring.

Position the synchronizer ring on the synchronizer body as shown in the illustration. Insert a feeler gauge and measure clearance at two opposite points. If clearance is less than 0.6 mm (0.024 inch) for the 3rd-4th, 1st-2nd and 5th synchronizers (7124) and 0.4 mm (0.016 inch) for the reverse synchronizers, replace the synchronizer, affected mainshaft gear, or both if required to bring to within specification.

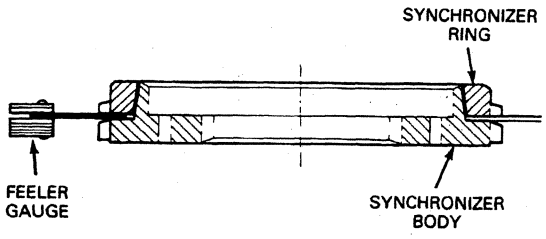

GEARS	CLEARANCE
1	0.6 mm (0.024 inch)
2	0.6 mm (0.024 inch)
3	0.6 mm (0.024 inch)
4	0.6 mm (0.024 inch)
5	0.6 mm (0.024 inch)
Reverse	0.4 mm (0.016 inch)

C8725-1B

Synchronizer Compression Spring Tension Check

Check the length of all compression springs of synchronizers.

SPRING SPECIFICATIONS

Unloaded Length	O.D.	Wire Diameter
14.8 mm (Min.) (0.583 In.)	5.960 mm (0.235 In.)	0.95 mm (0.037 In.)

Mainshaft and Input Shaft Gears

1. Inspect the friction taper cone on the gears and check for the following wear patterns.
   a. Sporadic slightly darkened patches on otherwise evenly smoothed circumference is acceptable. The patches will appear to be blackish in color and will vary in degree and surface area depending on the synchronizer ring contact area.
   b. Signs of excessive heat will appear to be burnt to a reddish-blue color, mainly on the edges of the cone. This is a result of excessive overloading, operating failure or perhaps a malfunctioning clutch system.
2. Replace gears showing excessively burnt spots (reddish-blue) on the friction taper cone edges. In this case, the selector teeth will be damaged as well.

Official Licensed Product
Ford Motor Company

CLEANING AND INSPECTION (Continued)

3. Reuse the gears if sufficient synchronizer reserve allowance is available and the teeth (dog teeth) are in good condition. Acceptable wear patterns are depicted in the following illustration.

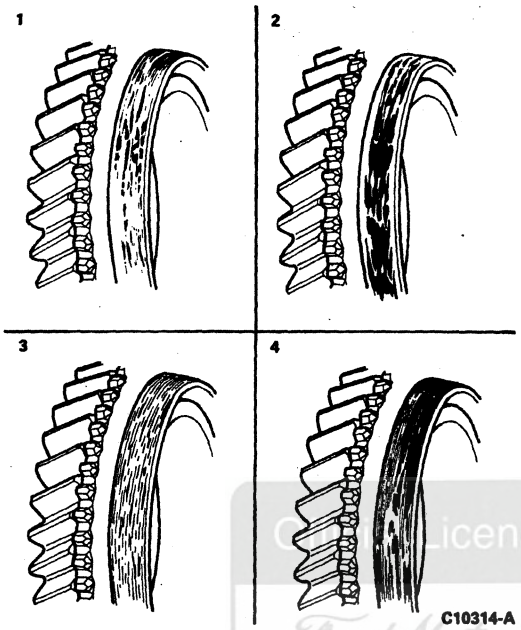

Shift Fork/Sliding Sleeve

Check the contact surfaces of the shift fork and sliding hub sleeve for evidence of wear or damage.

Synchronizer Body

1. Check operation of sliding sleeve installed onto synchronizer body.
2. Position synchronizer body and sleeve horizontally. Lift the synchronizer body approximately three-quarters of the way off the sleeve. Release the synchronizer body, and observe downward motion. Synchronizer body should slide downward into sleeve on its own. It should not be necessary to push synchronizer body into sleeve. Service as necessary.

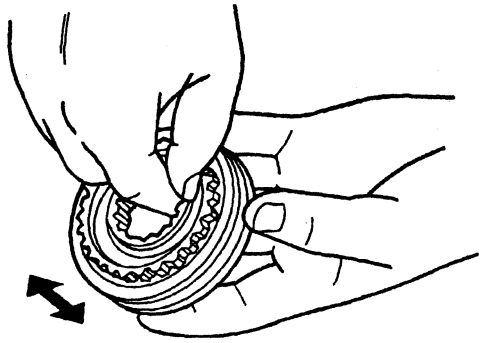

Speedometer Gears

Check drive gear, driven gear and driven gear shaft for wear or damage.

Thrust Washers

Check the surfaces of all thrust washers. Replace washers that are scored or reduced in thickness.

Bearing Retainers

Replace bearing covers that are grooved or showing wear from the thrust or adjacent bearings. Check the oil return threads in the bearing covers. If the sealing action of the threads has been destroyed by contact from the input shaft (7017) or output shaft, replace the covers.

ADJUSTMENTS

Bearing Preload Adjustment

Measurement and adjustment of the tapered roller bearings is necessary if a housing, countershaft cluster gear (7113), mainshaft or input shaft (7017) has been replaced or if a tapered roller bearing per shaft has been replaced. The mainshaft, input shaft, and countershaft cluster gear should be adjusted to provide a preload of 0.02-0.11 mm (0.00079-0.00434 inch). After adjusting the two shafts, each should be rotated a few times to center the rollers in the bearings involved.

Input Shaft and Mainshaft Tapered Roller Bearing Preload Measurement

1. With the transmission (7003) placed on a bench with the output flange facing upward, attach a dial indicator gauge with a magnetic base, such as Dial Indicator / Magnetic Base D78P-4201-B or equivalent to the output flange in such a manner that the measurement bar will rest on the output end of the mainshaft as shown in the illustration.
2. Zero the dial indicator and, using a pry bar, gently pry up the input shaft (7017) and mainshaft.

Ford Motor Company Licensed Product

ADJUSTMENTS (Continued)

3. NOTE: Shims and oil baffle must be removed prior to preload measurement. The oil baffle is part of the shim package under the outer bearing race.

   Note the indicator gauge reading. An input bearing front shim and oil baffle which is to be fitted later must have a combined thickness equal to the dimension recorded on the dial plus 0.02-0.11 mm (0.00079-0.00434 inch). This will result in obtaining the specified preload after installation of the shims and oil baffle, and mainshaft and countershaft cluster gear (7113).

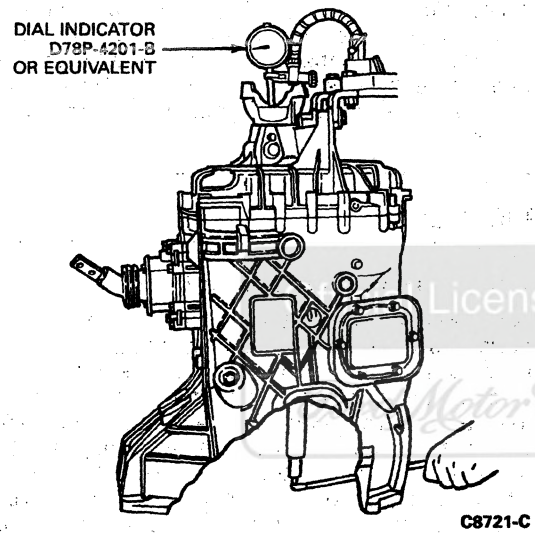

Countershaft Tapered Roller Bearing Preload Measurement

SPECIAL SERVICE TOOL(S) REQUIRED

Description	Tool Number
Clutch Housing Alignment Adapter	T75L-4201-A

1. NOTE: Countershaft is serviced by Ford as an assembly only. Individual countershaft components will not be serviced.

   Using two 10 mm hex screws, attach Dial Indicator with Bracketry TOOL-4201-C and Clutch Housing Alignment Adapter T75L-4201-A to the PTO opening in the case (7005) as shown in the illustration. Position the dial indicator gauge to the support in such a way that the measurement bar rests against the flat face of the fourth speed helical gear on the countershaft cluster gear (7113).

2. NOTE: Countershaft thrust washer (7119) under front bearing race must be removed prior to preload measurement.

   Set the dial indicator needle to zero.

3. Insert pry bars through each of the two power take-off openings and position them beneath the 4th speed helical gear on the countershaft cluster gear. Pry up on the countershaft cluster gear.

4. Like the preceding shaft check, the preload should be 0.02 to 0.11 mm (0.00079 to 0.00434 inch) after installing the thrust washer.

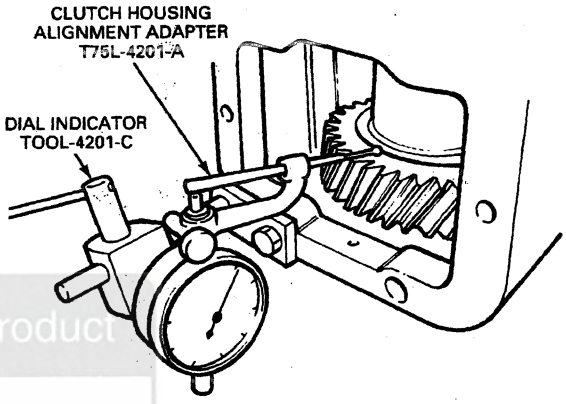

Mainshaft and Input Shaft Tapered Roller Bearing Preload Adjustment

SPECIAL SERVICE TOOL(S) REQUIRED

Description	Tool Number
Impact Slide Hammer	T50T-100-A

1. After completing the tapered roller bearing preload measurements described previously, place the case in an upright position with the input shaft (7017) pointing upwards.

Licensed Product Motor Company

ADJUSTMENTS (Continued)

2. Drive the two dowel pins out of their holes in the case and extension housing (7A039) and lift the case off the extension housing.

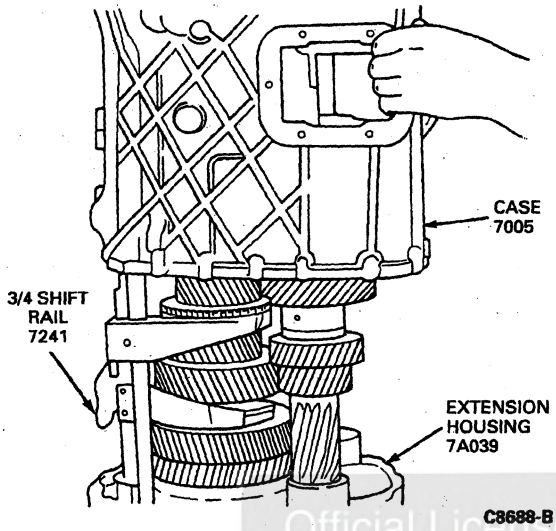

3. Using Impact Slide Hammer T50T-100-A and Internal Puller D80L-943-A or equivalent, remove the countershaft tapered roller bearing outer races and mainshaft tapered roller bearing outer races from the case.

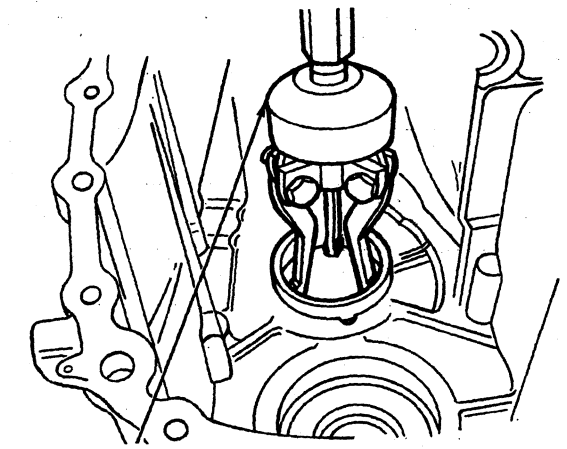

4. NOTE: Always replace the baffle plate with a new one when removed.

   Fit each race with a shim washer or shim washer and baffle plate to obtain the required preload determined previously. Countershaft preload is established by using shims alone; input shaft and mainshaft preload is established by using shims and a baffle. In both cases, the parts are installed beneath the outer race of the tapered roller bearing which seats in the case.

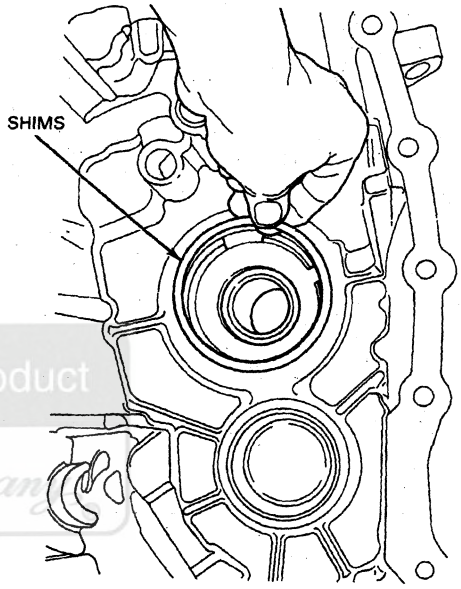

5. **CAUTION: Do not use silicone.**

   Apply Gasket Maker E2AZ-19562-B or equivalent meeting Ford specification WSK-M2G348-A5 to the mating surfaces of the case and extension housing.

6. Position the case on the extension housing. Install all of the screws that secure the case and extension housing and tighten to 23 N·m (17 lb-ft).

Input shaft and mainshaft should turn freely by hand after preload adjustment.

SPECIFICATIONS

Gear Ratios

	1st	2nd	3rd	4th	5th	Reverse
Close Ratio (Diesel)	5.08	2.60	1.53	1.0	0.77	4.66
Wide Ratio (Gasoline, Diesel)	5.72	2.94	1.61	1.0	0.76	5.24

Official Licensed Product

SPECIFICATIONS (Continued)

Inspection Standards and Tolerances

MOUNTING TEMPERATURES

Description	Temperature	
	C	F
Taper Roller Bearing Inner Race	160	320
Synchronizer Bodies	160	320
Thrust Washer	160	320
Needle Bearing Inner Race	160	320
Bearing Outer Race in Cover	160	320
Ball Bearing Sleeve in Cover	160	320

CLEARANCE SPECIFICATIONS

Description	mm	Inches
Countershaft (Preload)	0.02-0.11	0.00079-0.00434
Input Shaft and Mainshaft (Preload)	0.02-0.11	0.00079-0.00434
Mainshaft Reverse Gear	0.15-0.35	0.00591-0.01378
Mainshaft 1st Gear	0.15-0.35	0.00591-0.01378
Mainshaft 2nd Gear	0.15-0.45	0.00591-0.0177
Mainshaft 3rd Gear	0.15-0.35	0.00591-0.01378
Mainshaft 5th Gear	0.15-0.35	0.00591-0.01378
Mainshaft Synchronizer Body Retention Rings	0-0.1	0-0.00394

SPRING SPECIFICATIONS

Description	Length	Outer Diameter	Wire Diameter
Detent Springs	44.1 mm (1.736 In.) Min.	7.880 mm (0.310 In.)	1.250 mm (0.049 In.)
Reverse Gear Stop Plate Spring	35.5 mm (1.398 In.) Min.	9.040 mm (0.356 In.)	1.000 mm (0.039 In.)
Synchronizer Spring	14.8 mm (0.583 In.) Min.	5.960 mm (0.235 In.)	0.950 mm (0.037 In.)

LUBRICANT REFILL CAPACITIES

Description	Liters	U.S. Qts.	Imp. Qts.
Motorcraft MERCON® ATF XT-2-QDX or -DDX or MERCON® Equivalent	3.2	3.4	2.8
7.3L Diesel Synthetic Motorcraft MERCON® ATF XT-2-QDX or MERCON® Equivalent	3.2	3.4	2.8

TORQUE SPECIFICATIONS

Description	N·m	Lb-Ft	Lb-In
Transmission Case Plug (Straight Threads with Sealing Ring)	60	44	—
End Yoke to Mainshaft	270	200	—
Shift Tower Cover to Main Case	23	17	—
PTO Cover Plate	38	28	—
Idler Shaft Retention	22	16	—
Shift Rail Plate	10	7	—
Shift Cover to Tower Cover	10	7	—
Backup Lamp Switch	20	15	—
Upper Shift Lever	22-33	16-24	—
Shift Lever Boot Retainer to Housing	10	7	—

(Continued)

TORQUE SPECIFICATIONS (Cont'd)

Description	N·m	Lb-Ft	Lb-In
Transmission to Engine Bolts	53-72	39-53	—
Diesel Engine Charge Exhaust Pipe to Transmission Housing	54-68	40-50	—
Shift Rail Interlock	10	7	—
Case to Extension Housing	23	17	—
Case Plugs to Case	60	44	—
Gearshift Lever Boot to Floor Plate	5-9	—	44-80
Release Bearing Guide Tube Bolts	24	18	—
Transmission Support Crossmember	60-80	45-60	—
Insulator and Retainer Nut	68-94	50-70	—
Transmission to Engine Block	54-68	40-50	—
Muffler and Pipe Assembly Extension Pipe	23-33	17-24	—

LUBRICANT/ADHESIVE/CLEANER SPECIFICATIONS

Description	Part Number	Ford Specification
Anaerobic Sealant	E3AZ-19554-A	WSK-M2GA9
Gasket Maker	E2AZ-19562-B	WSK-M2G348-A5

Unauthorized Licensed Product Ford Motor Company

SPECIAL SERVICE TOOLS/EQUIPMENT

SPECIAL SERVICE TOOLS REQUIRED

Tool Number/ Description	Illustration
T50T-100-A Impact Slide Hammer	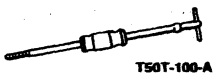
T57L-500-B Bench Mounted Holding Fixture	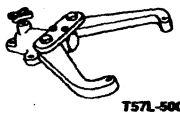
T69L-10300-B Steering Pump Pulley Remover	
T73T-4222-A Bearing Cup Replacer	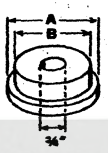
T75L-1165-B Axle Bearing/Seal Plate	
T75L-4201-A Clutch Housing Alignment Adapter	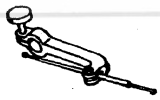
T75L-7025-G Bearing Collet Sleeve	
T77F-1102-A Bearing Cup Puller	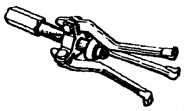
T77J-7025-B Remover Tube	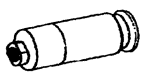
T77L-9533-B Jet Plug Remover	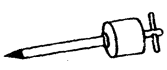

(Continued)

SPECIAL SERVICE TOOLS REQUIRED (Cont'd)

Tool Number/ Description	Illustration
T78P-4851-A Companion Flange Holding Tool	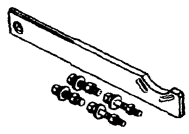
T80T-4000-W Driver Handle	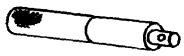
T84T-7025-B TOD Forcing Screw	
T85T-4621-AH Inner Pinion Bearing Cone Replacer	
T87T-7025-AH Locknut Socket	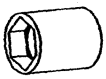
T87T-7025-BH Rear Seal Replacer	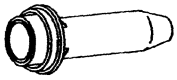
T87T-7025-CH Rear Seal Remover	
T87T-7025-DH Needle Bearing Replacer	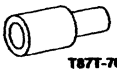
T87T-7025-EH Front Seal Replacer	
T87T-7025-FH Bearing Collets	

(Continued)

Official Licensed Product Ford Motor Company

SPECIAL SERVICE TOOLS/EQUIPMENT (Continued)

SPECIAL SERVICE TOOLS REQUIRED (Cont'd)

Tool Number/ Description	Illustration
T87T-7025-HH Gear Pack Holding Fixture	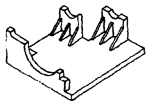 T87T-7025-HH
T87T-7025-JH Shift Rod Support	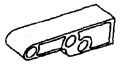 T87T-7025-JH
T87T-7025-LH Output Seal Replacer	 T87T-7025-LH
T87T-7025-MH Puller Collets	 T87T-7025-MH
T87T-7025-NH Puller Collets	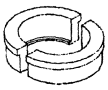 T87T-7025-NH
T87T-7025-OH Collet Retaining Ring	 T87T-7025-OH
T87T-7025-PH Mainshaft Front Bearing Cup Replacer	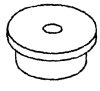 T87T-7025-PH

(Continued)

SPECIAL SERVICE TOOLS REQUIRED (Cont'd)

Tool Number/ Description	Illustration
T95T-7025-A Input Shaft Seal Replacer	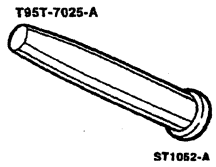 T95T-7025-A ST1052-A
T96T-7025-A Countershaft Bearing Remover	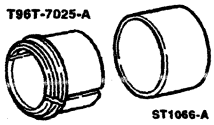 T96T-7025-A ST1066-A

SPECIAL SERVICE TOOLS DESIRED

Tool Number	Description
D78P-4201-B	Dial Indicator/Magnetic Base
D79L-4621-A	Bearing Pulling Attachment
D80L-100-G	Blind Hole Puller
D80L-625-4	Shaft Protector
D80L-927-A	Push-Puller Set
D80L-943-A	Internal Puller
D81L-4220-A	Pinion and Carrier Bearing Puller
D87L-1000-A	Endless Lifting Sling
TOOL-4201-C	Dial Indicator with Bracketry

ROTUNDA EQUIPMENT

Model	Description
107-R0300	Heat Gun
164-R3506	Low Lift Transmission Jack
164-R3900	Precision Metal Gear/Bearing Heater

Official Licensed Product

SECTION 07-05 Transmission, Automatic, External Controls

SUBJECT	PAGE
VEHICLE APPLICATION	07-05-1
DESCRIPTION AND OPERATION	
Brake Shift Interlock System	07-05-1
Shift Control Linkage	07-05-1
Transmission Control Switch	07-05-2
DIAGNOSIS AND TESTING	
Electrical Schematic Reference(s)	07-05-2
Transmission, Automatic, External Controls	07-05-2
Inspection and Verification	07-05-2
Pinpoint Tests	07-05-3
Symptom Chart	07-05-2
REMOVAL AND INSTALLATION	
Brake Shift Lock Actuator	07-05-6
REMOVAL AND INSTALLATION (Cont'd.)	
Gearshift Lever and Housing	07-05-7
Throttle Valve Control Linkage, External	07-05-8
Transmission Control Switch	07-05-8
Transmission Shift Cable and Bracket	07-05-6
CLEANING AND INSPECTION	
Brake Shift Interlock System	07-05-9
Gearshift Lever	07-05-9
ADJUSTMENTS	
Shift Indicator Cable	07-05-10
Transmission Shift Control Cable	07-05-9
SPECIFICATIONS	07-05-11

VEHICLE APPLICATION

F-250 Heavy Duty, F-350 and F-Super Duty

Official Licensed Product
Ford Motor Company

DESCRIPTION AND OPERATION

Shift Control Linkage

The transmission shift control linkage or cable transfers the transmission operating mode from the gearshift lever (7210) to the automatic transmission. The indicated transmission position on the steering column selector shaft is transferred to a shift lever on the bottom of the steering column. On vehicles equipped with cable-operated shift systems, the indicated position of the gearshift lever is transferred to the automatic transmission through the transmission column shift selector tube (7212), then to the cable, and down to the manual control lever (7A256) at the automatic transmission.

Brake Shift Interlock System

All vehicles are equipped with a brake shift interlock system. The brake shift interlock system prevents the shifting from PARK (the key is in run) unless the service brake is depressed. The brake shift interlock system consists of a brake shift lock actuator mounted at the base of the steering column. If the key is in run, the brake shift lock actuator continually runs unless the brake is depressed.

DESCRIPTION AND OPERATION (Continued)

Transmission Control Switch

Vehicles equipped with E4OD automatic transmissions have transmission control switch (TCS) located on the end of the gearshift lever (7210). Pushing the transmission control switch will either disengage or engage the overdrive function of the automatic transmission. If the transmission control switch has been depressed and OVERDRIVE disengaged, the word OFF will illuminate on the gearshift lever.

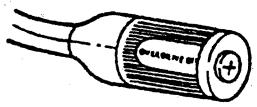

TRANSMISSION CONTROL SWITCH (TCS) DD0604-A

DIAGNOSIS AND TESTING

Electrical Schematic Reference(s)

Refer to Electrical and Vacuum Troubleshooting Manual, Cell 37, Shift Lock for schematic and connector information.

Refer to Electrical and Vacuum Troubleshooting Manual, Cell 30, Transmission Controls (E4OD) for schematic and connector information.

Transmission, Automatic, External Controls

Inspection and Verification

1. Visually inspect the following components of brake shift interlock system. Determine if any of the following electrical or mechanical concerns apply.

VISUAL INSPECTION CHART

Mechanical	Electrical
• Kinked or bound shift lock cable	• Blown fuse(s)
• Kinked or bound shift cable	• Poor connections
• Damaged selector linkage	• Damaged wiring harness

2. If the concern(s) remains after the inspection, determine the symptom(s) and proceed to the following symptom chart.

Symptom Chart

Refer to the Electrical and Vacuum Troubleshooting Manual for the connector numbers in the pinpoint tests.

Use the symptom chart as an aid in determining possible conditions, sources and necessary service actions for shift control linkage.

SHIFT CONTROL LINKAGE

Condition	Possible Source	Action
• Brake Shift Interlock System Does Not Release or Lock Properly	• Circuitry open / shorted. • Blown fuse. • Damaged stoplight switch. • Damaged brake shift lock actuator.	• GO to Pinpoint Test A.
• Shift Control Linkage Binding, Out of Proper Gear Relationship	• Damaged ignition / shifter interlock cable. • Loose ignition / shifter interlock cable. • Loose retainer bracket. • Shift linkage misadjusted. • Damaged internal transmission component.	• GO to Pinpoint Test B.
• Transmission Control Switch (TCS) and Indicator Lamp Not Operating Properly	• Damaged control switch. • Circuitry open / shorted. • Blown fuse. • Burned-out miniature bulb. • Damaged powertrain control module.	• GO to Pinpoint Test C.

DIAGNOSIS AND TESTING (Continued)

BRAKE-SHIFT INTERLOCK SWITCH

Condition	Possible Source	Action
• Cannot Shift from Park with Brake Depressed	• No voltage signal from brake circuit. • Large voltage difference between brake / ignition circuit. • Broken / seized solenoid. • Solenoid electrically worn or damaged.	• CHECK voltage at wire terminal. If no voltage when brake is depressed, SERVICE circuit. • MEASURE the voltage difference between ignition input and brake input — not to exceed 2 volts. SERVICE circuit. • INSPECT latch assembly and plunger. LUBRICATE or REPLACE. • REPLACE solenoid.
• Can Shift from Park Without Depressing Brake	• No power to solenoid. • Broken / seized solenoid. • Solenoid electrically worn or damaged.	• CHECK solenoid wire terminals for power in ignition circuit and proper ground. • INSPECT latch assembly and plunger. LUBRICATE or REPLACE. • REPLACE solenoid.

BRAKE-SHIFT LOCK ACTUATOR OPERATION TABLE

Brake Pedal	Ignition Input	Brake Input	Actuator Status
Not Depressed	12 Volts	0 Volts	Energized — Locked in Park
Depressed	12 Volts	12 Volts	De-energized — Can Shift from Park

Official Licensed Product
Ford Motor Company

Pinpoint Tests

PINPOINT TEST A: BRAKE SHIFT INTERLOCK SYSTEM DOES NOT RELEASE OR LOCK PROPERLY

Test Step		Result ▶	Action to Take
A1	CHECK POWER SUPPLY TO BRAKE SHIFT LOCK ACTUATOR		
	• Turn key to RUN. • Using a test lamp connected to a known good ground, check Circuit 296 (W / P) at Fuse 10 (10A) for F-Series except F-Super Duty or Circuit 298 (P / O) at Fuse 7 (15A) for F-Super Duty. • **Did test lamp illuminate?**	Yes ▶ No ▶	GO to **A3.** GO to **A2.**
A2	CHECK FUSE 10 (10A) / 7 (15A) SUPPLY		
	• Remove Fuse 10 (10A) for F-Series except F-Super Duty or Fuse 7 (15A) for F-Super Duty. • Using test lamp, check power supply to Fuse 10 (10A) for F-Series except F-Super Duty or Circuit 298 (P / O) at Fuse 7 (15A) for F-Super Duty. • **Did test lamp illuminate?**	Yes ▶ No ▶	GO to **A3.** SERVICE Circuit 296 (W / P) for F-Series except F-Super Duty or Circuit 298 (P / O) for F-Super Duty for open circuit. RESTORE vehicle. RETEST system.
A3	CHECK POWER SUPPLY AT BRAKE SHIFT LOCK ACTUATOR		
	• Gain access to brake shift lock actuator. Refer to Transmission Shift Cable and Bracket in the Removal and Installation portion of this section. • Using test lamp, check power supply at brake shift lock actuator connector C236 Circuit 296 (W / P) for F-Series except F-Super Duty or Circuit 298 (P / O) for F-Super Duty. • **Did test lamp illuminate?**	Yes ▶ No ▶	GO to **A4.** SERVICE Circuit 296 (W / P) for F-Series except F-Super Duty or Circuit 298 (P / O) for F-Super Duty for open circuit. RESTORE vehicle. RETEST system.
A4	CHECK BRAKE ON / OFF (BOO) SWITCH POWER TO BRAKE SHIFT LOCK ACTUATOR		
	• Press brake pedal and hold. • Using test lamp, check for voltage at Circuit 511 (LG) at brake shift lock actuator connector C236. • **Did test lamp illuminate?**	Yes ▶ No ▶	GO to **A9.** GO to **A5.** LEAVE brake pedal pressed.

DIAGNOSIS AND TESTING (Continued)

PINPOINT TEST A: BRAKE SHIFT INTERLOCK SYSTEM DOES NOT RELEASE OR LOCK PROPERLY (Continued)

Test Step		Result ▶	Action to Take
A5	CHECK POWER AT BRAKE ON/OFF (BOO) SWITCH		
	• Using test lamp, check Circuit 511 (LG) for voltage. • **Did test lamp illuminate?**	Yes ▶	SERVICE Circuit 511 (LG) for open circuit. RESTORE vehicle. RETEST system.
		No ▶	GO to **A6.**
A6	CHECK FOR SUPPLY TO BRAKE ON/OFF (BOO) SWITCH		
	• Using test lamp, check for voltage at Circuit 10 (LG/R) at stoplight switch connector C279. • **Did test lamp illuminate?**	Yes ▶	REPLACE damaged brake ON/OFF stoplight switch. RESTORE vehicle. RETEST system.
		No ▶	GO to **A7.**
A7	CHECK FUSE 13 (15A)/9 (15A) OUTPUT		
	• Using test lamp, check output side of Fuse 13 Circuit 10 (LG/R) for voltage for F-Series except F-Super Duty or Fuse 9 Circuit 10 (LG/R) for F-Super Duty. • **Did test lamp illuminate?**	Yes ▶	SERVICE Circuit 10 (LG/R) for F-Series except F-Super Duty or Fuse 9 Circuit 10 (LG/R) for F-Super Duty for open circuit. RESTORE vehicle. RETEST system.
		No ▶	GO to **A8.**
A8	CHECK CIRCUIT 10 (LG/R)		
	• Remove Fuse 13 (15A) for F-Series except F-Super Duty or Fuse 9 (15A) for F-Super Duty. • Using an ohmmeter connected to a known good ground, connect second lead to Circuit 10 (LG/R) at Fuse 13 for F-Series except F-Super Duty or Circuit 10 (LG/R) at Fuse 9 for F-Super Duty. Measure resistance. • **Is resistance 5 ohms or less?**	Yes ▶	SERVICE Circuit 10 (LG/R) or Circuit 383 (R/W) for F-Series except F-Super Duty for a short to ground. RESTORE vehicle. RETEST system.
		No ▶	REPLACE damaged Fuse 13 (15A). RESTORE vehicle. RETEST system.
A9	CHECK CIRCUIT 57 (BK)		
	• Using an ohmmeter connected to a known good ground, connect second lead to Circuit 57 (BK). Measure resistance. • **Is resistance 5 ohms or less?**	Yes ▶	REPLACE damaged brake shift lock actuator. RESTORE vehicle. RETEST system.
		No ▶	SERVICE Circuit 57 (BK) for open circuit. RESTORE vehicle. RETEST system.

PINPOINT TEST B: SHIFT CONTROL LINKAGE BINDING, OUT OF PROPER GEAR RELATIONSHIP

Test Step		Result ▶	Action to Take
B1	CHECK SHIFT CONTROL LINKAGE		
	• Gain access to shift control linkage. Refer to Transmission Shift Cable and Bracket in the Removal and Installation portion of this section. • Actuate shift linkage in all ranges. • Observe all linkage during operation. • **Is linkage damaged?**	Yes ▶	REPLACE shift control linkage. RESTORE vehicle. RETEST system.
		No ▶	GO to **B2.**
B2	CHECK SHIFT CONTROL CABLE		
	• Check transmission shift cable and bracket installation and tightness. • **Is shift cable and bracket properly installed?**	Yes ▶	ADJUST linkage. REFER to Transmission Shift Control Cable in the Adjustments portion of this section. GO to **B3.**
		No ▶	SERVICE as necessary. RESTORE vehicle. RETEST system.

Licensed Product Ford Motor Company

DIAGNOSIS AND TESTING (Continued)

PINPOINT TEST B: SHIFT CONTROL LINKAGE BINDING, OUT OF PROPER GEAR RELATIONSHIP (Continued)

Test Step		Result ▶	Action to Take
B3	CHECK LINKAGE / CABLE FOR PROPER GEAR RELATIONSHIP		
	• Actuate shifter in all ranges. • **Does indicator match gear selection?**	Yes ▶	SERVICE is complete. RESTORE vehicle. RETEST system.
		No ▶	REPLACE damaged linkage / cable. RESTORE vehicle. RETEST system.

PINPOINT TEST C:TRANSMISSION CONTROL SWITCH (TCS) AND INDICATOR LAMP NOT OPERATING PROPERLY

Test Step		Result ▶	Action to Take
C1	CHECK SUPPLY TO TRANSMISSION CONTROL SWITCH (TCS)		
	• Key to RUN. • Using a test lamp connected to a known good ground, check for voltage at output side of Fuse 17 (10A) Circuit 640 (R / Y) for F-Series except F-Super Duty or Fuse 7 (15A) Circuit 298 (P / O) for F-Super Duty. • **Did test lamp illuminate?**	Yes ▶	GO to **C3.**
		No ▶	GO to **C2.**
C2	CHECK FUSE 17 (10A) / 7 (15A)		
	• Remove Fuse 17 (10A) for F-Series except F-Super Duty or Fuse 7 (15A) for F-Super Duty. • Using an ohmmeter connected to a known good ground, connect second lead to output side of Fuse 17 (10A) cavity for F-Series except F-Super Duty or Fuse 7 (15A) cavity for F-Super Duty. • Measure resistance. • **Is resistance 5 ohms or less?**	Yes ▶	SERVICE Circuit 640 (R / Y) for F-Series except F-Super Duty or Circuit 298 (P / O) for F-Super Duty for short to ground. REPLACE Fuse 17 (10A) for F-Series except F-Super Duty or Fuse 7 (15A) for F-Super Duty. RESTORE vehicle. RETEST system.
		No ▶	REPLACE damaged Fuse 17 (10A) for F-Series except F-Super Duty or Fuse 7 (15A) for F-Super Duty. RESTORE vehicle. RETEST system.
C3	CHECK SUPPLY VOLTAGE AT TRANSMISSION CONTROL SWITCH (TCS)		
	• Using a test lamp, check Circuit 640 (R / Y) for F-Series except F-Super Duty or Circuit 298 (P / O) for F-Super Duty at transmission control switch (TCS) for voltage. • **Did test lamp illuminate?**	Yes ▶	GO to **C4.**
		No ▶	SERVICE Circuit 640 (R / Y) for F-Series except F-Super Duty or Circuit 298 (P / O) for F-Super Duty for open circuit. RESTORE vehicle. RETEST system.
C4	CHECK TRANSMISSION CONTROL SWITCH (TCS)		
	• Actuate the transmission control switch (TCS). • Using a test lamp, check for voltage at Circuit 224 (T / W) at transmission control switch (TCS). • **Did test lamp illuminate?**	Yes ▶	GO to **C5.**
		No ▶	REPLACE damaged transmission control switch (TCS). RESTORE vehicle. RETEST system.
C5	CHECK TRANSMISSION CONTROL SWITCH (TCS) INPUT TO POWERTRAIN CONTROL MODULE (PCM)		
	• Gain access to the powertrain control module. • Using a test lamp, check for voltage at Circuit 224 (T / W) at PCM connector C185 or C1027. • **Did test lamp illuminate?**	Yes ▶	GO to **C6.**
		No ▶	SERVICE Circuit 224 (T / W) for open circuit. RESTORE vehicle. RETEST system.
C6	CHECK POWERTRAIN CONTROL MODULE OUTPUT TO TRANSMISSION CONTROL INDICATOR LAMP		
	• Using an ohmmeter connected to a known good ground, carefully back-probe Circuit 911 (W / LG) at PCM connector C185 or C1027. • Measure resistance. • **Is resistance 5 ohms or less?**	Yes ▶	System OK.
		No ▶	REPLACE damaged powertrain control module. RESTORE vehicle. RETEST system.

Ford Motor Company Licensed Product

REMOVAL AND INSTALLATION

Brake Shift Lock Actuator

Removal

1. Remove steering column. Refer to Section 11-04 in the Body, Chassis Manual.
2. Unclip wire terminal from brake shift lock actuator.
3. Remove insert plate and brake shift lock actuator by removing two screws.

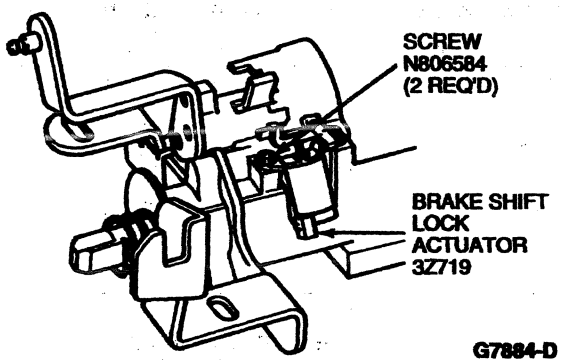

4. Pry off clip.

Installation

1. NOTE: The clip that retains the brake shift lock actuator to the insert plate should not be replaced for service. The clip's sole purpose is an assembly aid for the assembly plant.

   Position insert plate / brake shift lock actuator assembly to the steering column and tighten the screws.
2. Install the steering column. Refer to Section 11-04 in the Body, Chassis Manual.

Transmission Shift Cable and Bracket

Removal

1. From under instrument panel, disconnect shift cable from steering column.
2. Remove cable plastic terminal from gear shift lever pivot ball by prying with a screwdriver between cable plastic terminal and gearshift lever (7210).
3. From engine compartment, pry cable grommet from dash panel.
4. Remove the plastic slide adjuster from manual lever pivot ball, prying with a screwdriver between the slide adjuster and manual control lever (7A256).
5. Remove transmission shift cable from transmission shift cable bracket (7B229) by carefully lifting on the locking tab while pulling up on the fitting.
6. From engine compartment, pull cable through the instrument panel opening.

Installation

1. From instrument panel, feed plastic terminal end of cable through opening in dash panel to engine compartment.
2. Press cable grommet on transmission shift cable into dash panel.
3. From engine compartment, install transmission shift cable into transmission shift cable bracket and make sure locking ears are properly located and seated into bracket.
4. Remove the control cable retainer (7L116) and replace with a new control cable retainer.
5. Place transmission shift cable on manual lever pivot ball and press into place.
6. Push on the locking tab and make sure it is fully seated and locked into place.
7. From the passenger compartment, install cable to steering column bracket. Make sure it is fully seated.
8. Snap cable plastic terminal to shift control selector lever pivot ball on steering column.
9. Adjust transmission shift cable. Refer to Transmission Shift Control Cable in the Adjustments portion of this section.

Official Licensed Product
Ford Motor Company

REMOVAL AND INSTALLATION (Continued)

Transmission Shift Cable and Bracket

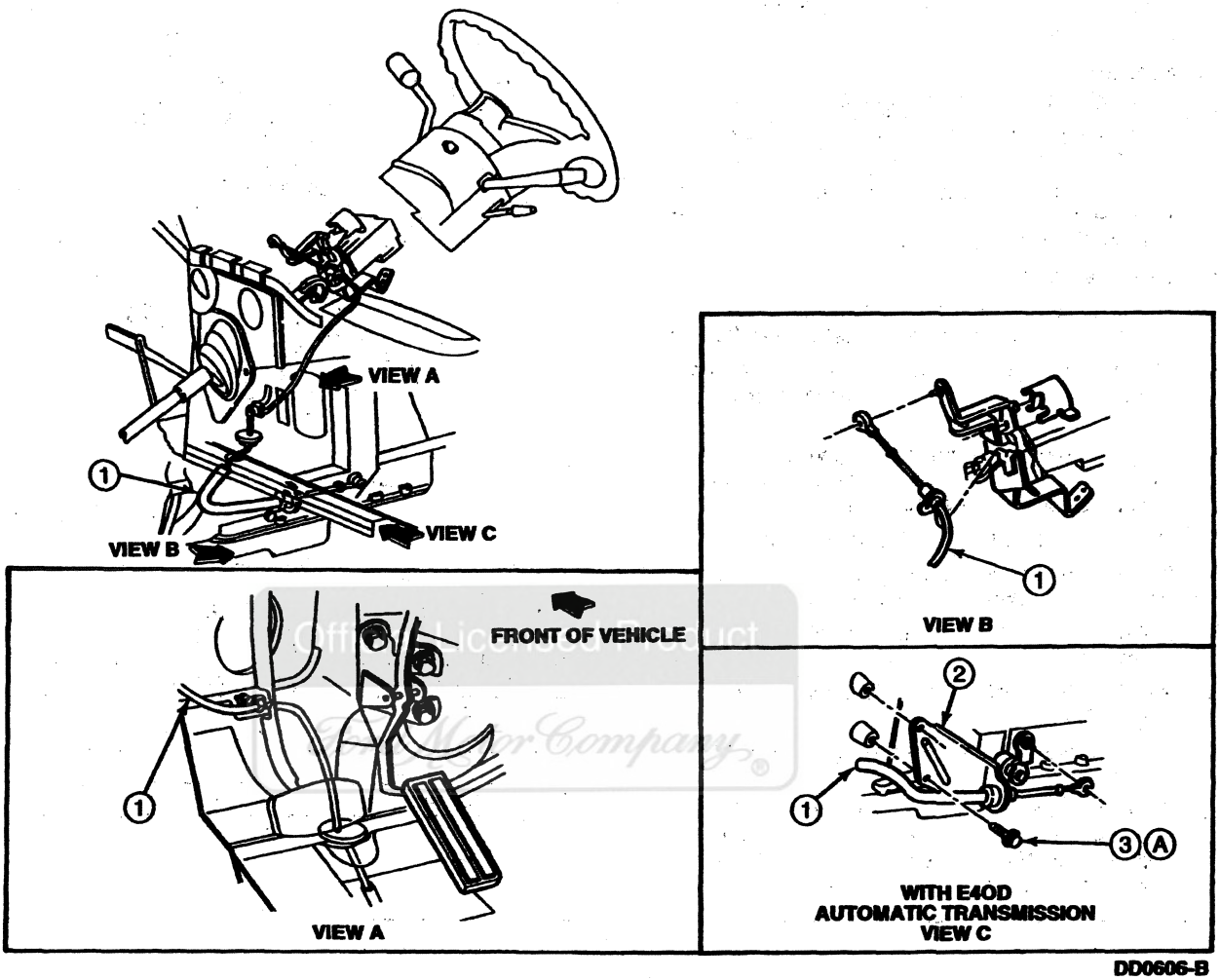

DD0606-B

Item	Part Number	Description
1	7E395	Shift Cable
2	7B229	Transmission Shift Cable Bracket

Item	Part Number	Description
3	56137-S100	Bolt, 3/8-16 x .62
A	—	Tighten to 30-40 N-m (22-30 Lb-Ft)

(Continued)

Gearshift Lever and Housing

Removal

1. Remove steering column release lever by unscrewing from the steering column.
2. Turn ignition switch lock cylinder (11582) to RUN position. Using a 1/8-inch drift, depress ignition switch lock cylinder retaining pin through access hole and remove ignition switch lock cylinder.
3. Remove retaining screws of the instrument cluster mask and remove instrument cluster mask.
4. Remove four retaining screws from lower steering column shroud. Remove upper and lower steering column shrouds.
5. Using a small screwdriver, pry steering column opening weather seal (3513) from pedestal on ignition switch lock cylinder. Slide instrument cluster mask toward handle of shift control selector lever and housing to expose shift lever pin.
6. On vehicles equipped with an E4OD transmission, disconnect transmission control switch (TCS).

REMOVAL AND INSTALLATION (Continued)

7. Using a small drift, tap shift lever pin from bottom for removal. Discard shift lever pin. Remove gearshift lever (7210).

Installation

1. Insert gearshift lever through hole in steering column opening weather seal. Position cover on gearshift lever.
2. Verify that the anti-rattle clip of the gearshift lever is correctly positioned in the shift tube shift lever socket. Replace if required.
3. Insert gearshift lever.
4. Install a new shift lever pin into position and tap in place until the head seats against gearshift lever.
5. On vehicles equipped with an E4OD automatic transmission, connect transmission control switch.
6. Position steering column opening weather seal on the steering column. Insert lower attachment into the slot on side of steering column.
7. Position upper attachment on shift lever pin.
8. Install upper and lower steering column shrouds and install screws. Tighten screws.
9. Install instrument cluster mask and retaining screws.
10. Install ignition switch lock cylinder into steering column flange.
11. Install steering column release lever onto steering column.
12. Check for proper start in PARK and NEUTRAL. Make sure start circuit cannot be actuated in DRIVE or REVERSE positions and the steering column is locked in the LOCK position.

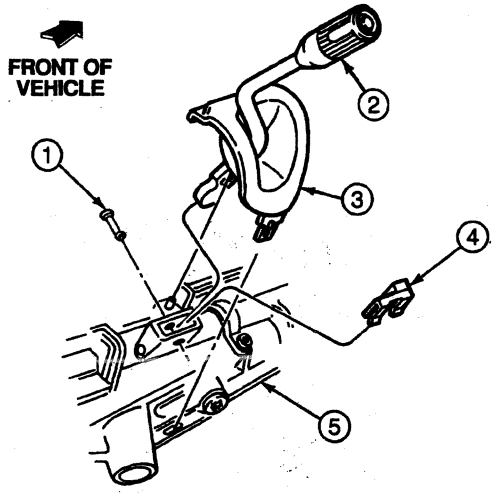

G7740-C

Item	Part Number	Description
1	7G357	Gearshift Lever Pin
2	7210	Gearshift Lever
3	3513	Steering Column Opening Weather Seal
4	7C464	Clip
5	3514	Steering Column Tube

Official Licensed Reproduction Ford Motor Company

Transmission Control Switch

Removal

1. NOTE: The indicator light cover can be removed from the gearshift lever (7210) and housing if it is damaged. Carefully insert a thin-blade screwdriver into the gearshift lever and using the ridge on the cover, slide cover off gearshift lever.

   Remove the transmission control switch (TCS) cover by inserting a thin-blade screwdriver into the recess at the end of the gearshift lever and unsnapping the cover from the gearshift lever.
2. Insert a thin-blade screwdriver into the slot on the TCS and remove the TCS by pulling TCS out of the gearshift lever.

Installation

1. NOTE: If the TCS cover was removed, install by positioning cover to gearshift lever and sliding into place. Make sure that the sides of the cover fit properly into the slots on the gearshift lever.

   Position TCS to gearshift lever making sure that the contact pins are properly oriented to the connector. Install TCS by pushing into gearshift lever until bottom is felt.
2. Position TCS cover to gearshift lever and snap into place.
3. Check TCS for proper operation.

Throttle Valve Control Linkage, External

Removal

1. Open hood and raise vehicle just enough to gain access to transmission while still able to work on throttle body connections.

REMOVAL AND INSTALLATION (Continued)

2. Install a spring on the throttle valve (TV) lever on the transmission to hold it in the full clockwise position.
3. Pry throttle valve cable end off throttle valve lever.
4. Squeeze tabs on cable retainer and remove from bracket.
5. Remove throttle body splash shield if so equipped. Squeeze tabs on throttle valve cable and pull cable conduit out of bracket.
6. Snap cable off ball on throttle body lever.

Installation

1. Insert cable into throttle accelerator cable bracket (9723) so locking tab is on top, and snap cable end onto throttle body ball. Do not snap cable locking tab down into position.
2. Route cable to transmission and through bracket.
3. Make sure spring is in place securing throttle valve lever in full clockwise position. Snap throttle valve cable end onto throttle valve lever ball, and snap cable into bracket.
4. Push down locking tab at engine end of conduit fitting to lock conduit at correct length. Tab is flush with circular profile of fitting.
5. Remove spring from throttle valve lever and install throttle body splash shield, if so equipped.

CLEANING AND INSPECTION

Brake Shift Interlock System

1. Turn ignition switch lock cylinder (11582) to run.
2. Verify that the gearshift lever (7210) is in PARK.
3. Without the brake pedal (2455) applied, verify that the gearshift lever cannot be shifted from PARK.
4. Apply the brake pedal. Verify that the gearshift lever can be shifted from PARK.
5. Shift to REVERSE.
6. Verify that the ignition switch lock cylinder cannot be turned to the LOCK position.
7. Shift to PARK.
8. Verify that the ignition switch lock cylinder can be turned to the LOCK position.
9. If the brake shift interlock system is not operating as specified, refer to Diagnosis and Testing in this section.

Gearshift Lever

Inspect the gearshift lever (7210) for damage, binding conditions and proper operation. Replace the gearshift lever as necessary. Refer to Gearshift Lever and Housing in the Removal and Installation portion of this section.

ADJUSTMENTS

Transmission Shift Control Cable

1. From inside the vehicle, place the gearshift lever (7210) in the OVERDRIVE position (E4OD). Hang a three-pound weight on the gearshift lever.
2. Raise vehicle on a hoist and position suitable safety stands under vehicle.
3. Remove the shift cable from the transmission lever ball stud.
4. Pull down the lock tab on the shift cable body.
5. Position the gearshift lever in the OVERDRIVE position (E4OD). This is three detents from the front-most lever position with the first position counting as one.
6. Connect the cable end fitting to the transmission lever ball stud.
7. Push up on the lock tab to lock the cable in the correctly adjusted position.
8. Remove safety stands and lower vehicle from hoist. Remove the three-pound weight from the gearshift lever.
9. **CAUTION: Under no circumstances should the cable be adjusted in any position other than (D) (OVERDRIVE) for the E4OD automatic transmission.**

   After making the adjustment, check for park engagement. Check the gearshift lever in all detent positions with the engine (6007) running to make sure of correct detent / transmission actions. Readjust if necessary.

Ford Motor Company Licensed Product

ADJUSTMENTS (Continued)

Shift Cable, Automatic Transmission, F-250 Heavy Duty, F-350 and F-Super Duty

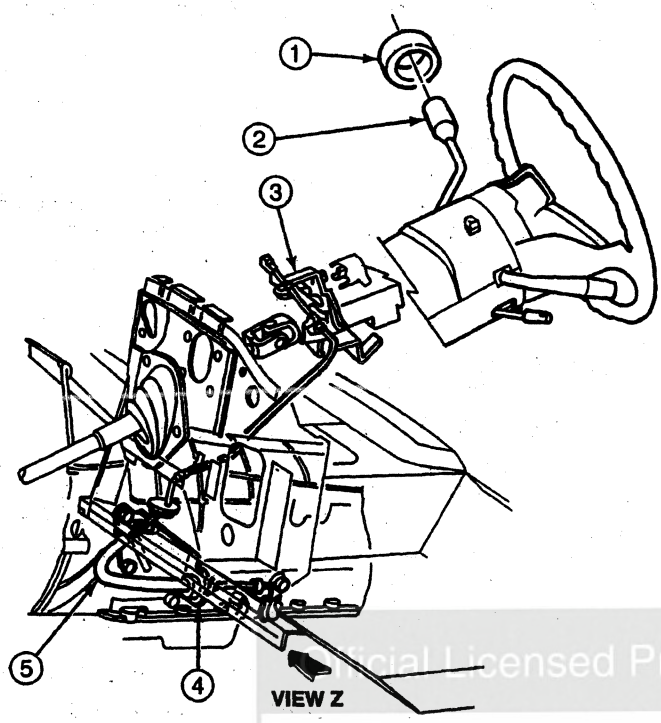

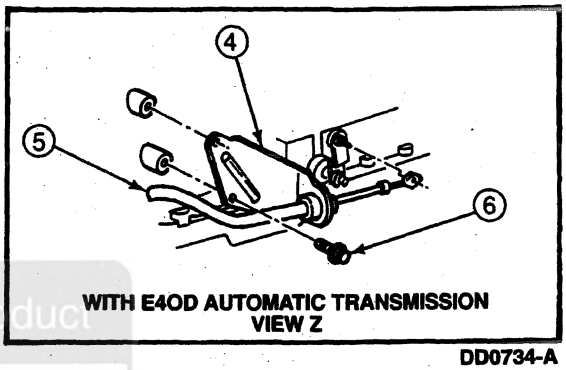

DD0734-A

Item	Part Number	Description
1	—	Three-Pound Weight (to Be Improvised in Shop)
2	7210	Gearshift Lever
3	3514	Steering Column
4	7B229	Transmission Shift Cable Bracket

Item	Part Number	Description
5	7E395	Cable Assy, Transmission Shift
6	56137-S100	Bolt, 3/16-16 x .62 Hex Flange Head

(Continued)

Shift Indicator Cable

1. Remove the four screws from the lower steering column shroud. Remove the lower steering column shroud.
2. Rotate gearshift lever (7210) clockwise until it bottoms out in first gear.
3. Rotate gearshift lever counterclockwise three detents (overdrive position).
4. Hang a three-pound weight on the gearshift lever.
5. Center pointer in the middle of D OVERDRIVE position, by rotating the thumbwheel located on right-hand side of steering column actuator housing.

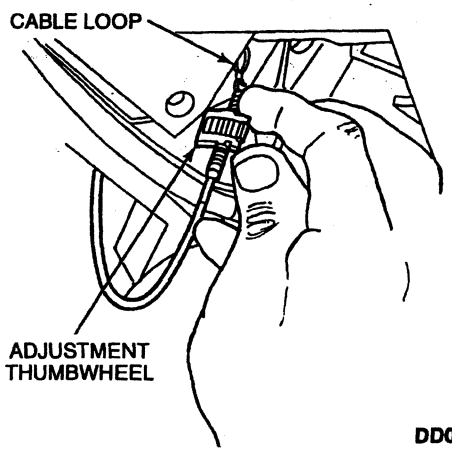

DD0605-A

ADJUSTMENTS (Continued)

E4OD Transmission Selector

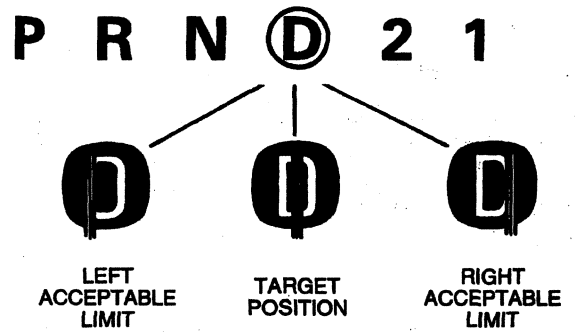

G7647-B

SPECIFICATIONS

TORQUE SPECIFICATIONS

Description	N·m	Lb-In
Transmission Shift Cable Bracket Retaining Bolt	30-40	22-30

Official Licensed Product
Ford Motor Company

SECTION 07-07A Transfer Case, 4x4 System, Service

SUBJECT	PAGE
VEHICLE APPLICATION	07-07A-1
DESCRIPTION AND OPERATION	
4-Wheel Drive Operation	07-07A-7
Locking Hubs	07-07A-7
4x4 Vehicle Driveline Windup	07-07A-8
Mechanical Operation	07-07A-3
2-Wheel Drive — High Range	07-07A-4
4-Wheel Drive — High Range	07-07A-5
4-Wheel Drive — Low Range	07-07A-6
DESCRIPTION AND OPERATION (Cont'd.)	
Neutral	07-07A-3
Mechanical Shift System	07-07A-1
Transfer Case, Chain-Driven	07-07A-1
Windup and Delay — Shifting Out of 4-Wheel Drive	07-07A-8
DIAGNOSIS AND TESTING	
Transfer Case	07-07A-9
Inspection and Verification	07-07A-9

VEHICLE APPLICATION

F-250, F-350 (4x4) Vehicles with Manual Shift Transfer Case

DESCRIPTION AND OPERATION

Transfer Case, Chain-Driven

NOTE: Consult the vehicle owner guide before towing any 4x4. There are speed and distance restrictions that vary from vehicle to vehicle.

Official Licensed Product
Ford Motor Company

Mechanical Shift System

The Borg-Warner 44-07 is a manual shift, part-time two-piece transfer case (7A195). The case is aluminum. The unit is lubricated by a positive-displacement oil pump that channels oil flow through drilled holes in the rear output shaft. The pump turns with the rear output shaft, and allows towing of the vehicle without disconnecting the rear driveshaft.

The input shaft, front output shaft, 4WD indicator switch, breather barb and shift lever are located on the front case half. The rear output shaft and drain and fill plugs are located on the rear case half.

DESCRIPTION AND OPERATION (Continued)

Borg-Warner 44-07 Manual Shift Transfer Case

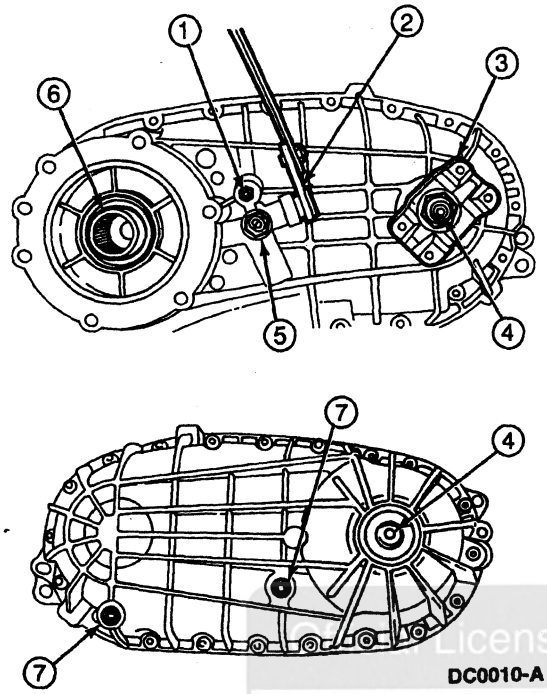

DC0010-A

Item	Part Number	Description
1	7034	Vent
2	7B106	Shift Lever
3	7B214	Case Yoke, Front
4	7061	Output Shaft
5	7E440	FWD Indicator Switch
6	7017	Input Shaft
7	87675-S	Fill/Drain Plug

The Borg-Warner 13-56 is a manual shift part-time three-piece transfer case. The case (7005) is magnesium and has an opening for a power takeoff (PTO). The unit is lubricated by a positive displacement oil pump that channels oil flow through drilled holes in the rear output shaft. The pump turns with the rear output shaft and allows towing of the vehicle without disconnecting the rear driveshaft.

The input shaft, front output shaft, 4WD indicator switch, and shift lever are located on the front case half. The rear output shaft, slip-yoke type bearing retainer, and drain and fill plugs are located on the rear case half.

Borg-Warner 13-56 Manual Shift Transfer Case

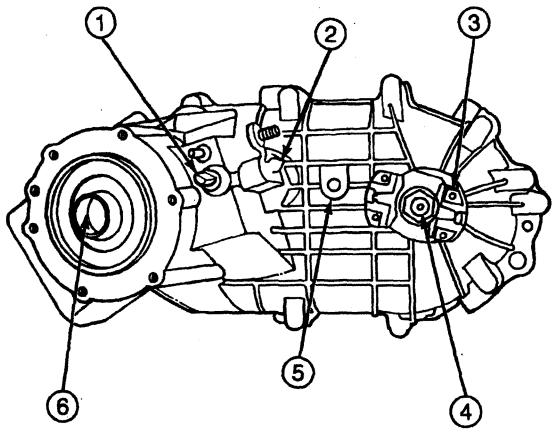

FRONT VIEW

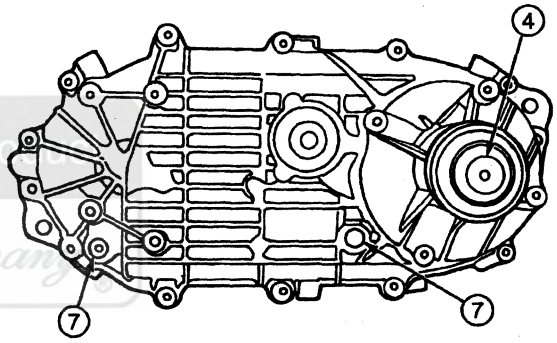

REAR VIEW C7860-E

Item	Part Number	Description
1	7E440	Top Gear Indicator Switch
2	7B106	Shift Lever
3	7B214	Case Yoke
4	7061	Output Shaft
5	87675	Fill Plug for PTO Use
6	7A398	Front Planet
7	87675	Transfer Case Plugs

Not Licensed Product
Ford Motor Company

DESCRIPTION AND OPERATION (Continued)

Transfer Case, Chain-Drive

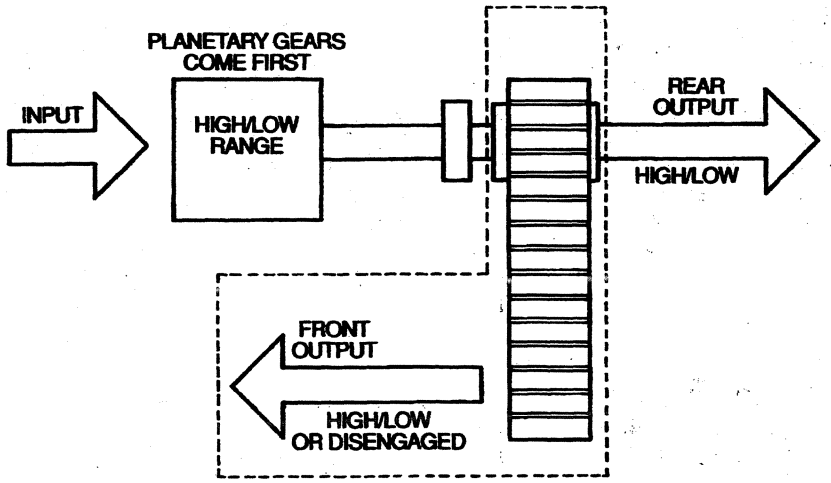

C11430-C

Official Licensed Product

Mechanical Operation

In the 4x2 mode, torque from the transmission (7003) is transferred to the front input shaft, which in turn drives the output and fifth gear drive shaft (7061) that drives the rear axle.

The 2W-4W shift is accomplished when the 2W-4W shift fork moves the lockup collar to engage the drive sprocket on the rear output shaft splines. The drive sprocket turns the chain which turns the front output shaft driven sprocket on the front output and fifth gear drive shaft and the front driveshaft.

The high-low shift is accomplished when the high-low shift fork moves the shift collar hub to engage the front planet (7A398) to the output and fifth gear drive shaft. Torque for the input shaft (7017) is then transmitted through the sun gear, which then turns the front planet. The front planet, which is now engaged to the output and fifth gear drive shaft, provides a reduction.

Neutral

With the shift selector in neutral, no power is transmitted to either front or rear. All the planetary gears turn freely with the input shaft, and the chain sprocket floats freely on the output and fifth gear drive shaft.

DESCRIPTION AND OPERATION (Continued)

Power Flow in Neutral

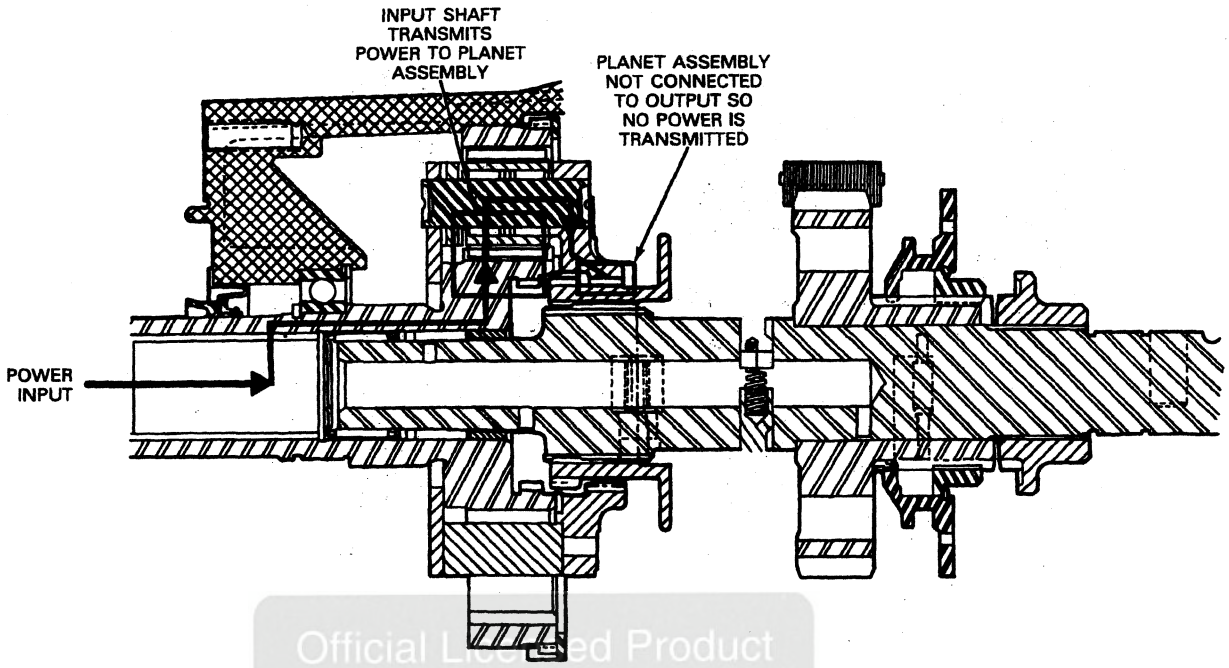

Official Licensed Product
Ford Motor Company

The following illustration shows a cross-section of the front planet. At the center, attached to the input shaft, is the sun gear. This gear meshes with four gears that surround it like planets (which is why this component is called a planetary gear). In turn, the four gears mesh with an outer gear called the ring gear (7A153).

The sun gear rotates at the speed of the transmission output. The ring gear is stationary. The front planet assembly rotates with the planetary gears as they "walk" around the inside of the ring gear to provide the gear reduction. If the output shaft is locked to the sun gear, as in high range, the output rotates at transmission output speed. If the output is locked to the front planet assembly, as in low range, the output rotates at the reduction rate.

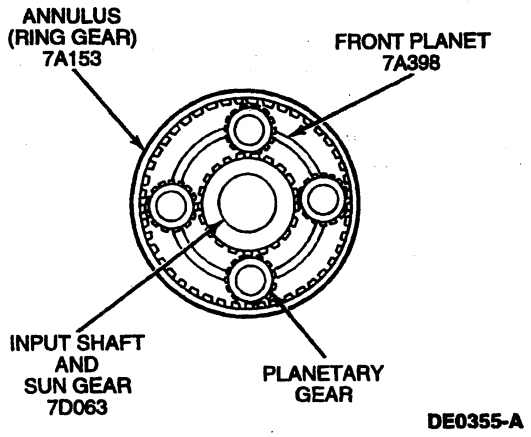

2-Wheel Drive — High Range

When the driver selects 2H, the shift collar hub at the center of the front planet slides forward, putting the transfer case (7A195) into the high speed range (direct drive). The input shaft and the rear output shaft are locked together. This results in direct drive, straight through to the rear driveshaft. In addition, the 4-wheel drive lockup collar is disengaged so none of the 4WD components turn.

DESCRIPTION AND OPERATION (Continued)

Power Flow in 2H

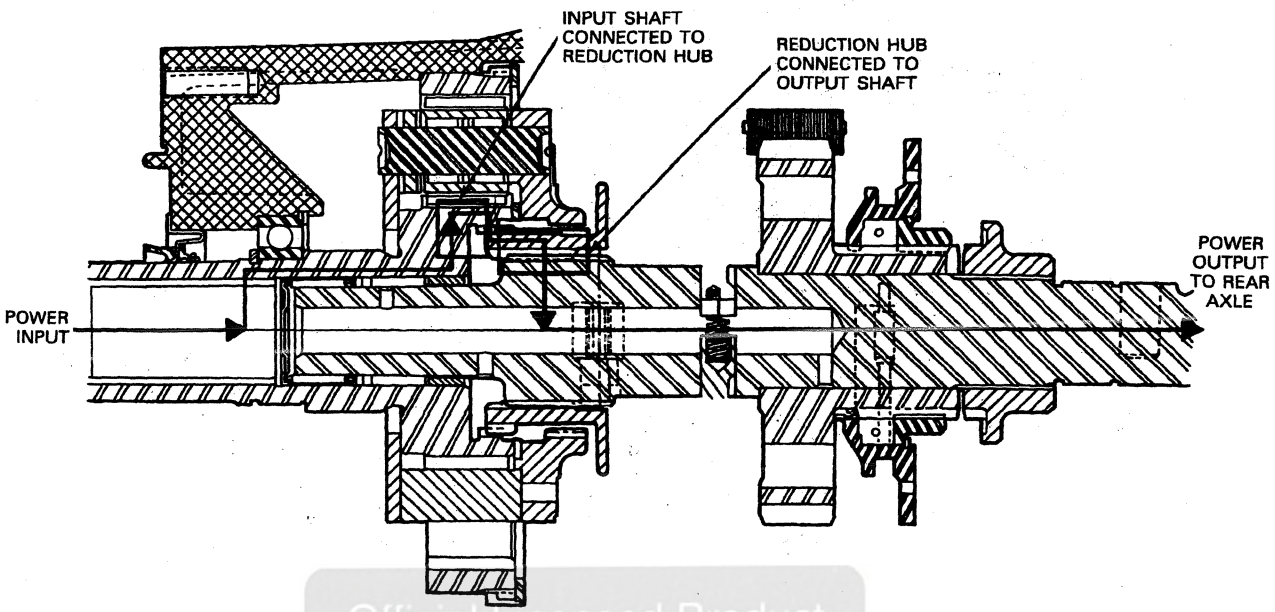

Official Licensed Product
Ford Motor Company

4-Wheel Drive — High Range

In 4-wheel drive — high range (4H), the front planet stays where it was in the 2H shift. The action of the shift lever causes the 4-wheel drive lockup hub to move rearward, locking the chain sprocket to the rear output shaft. Now, both the rear and the front wheels are being driven in the high range.

DESCRIPTION AND OPERATION (Continued)

Power Flow in 4H

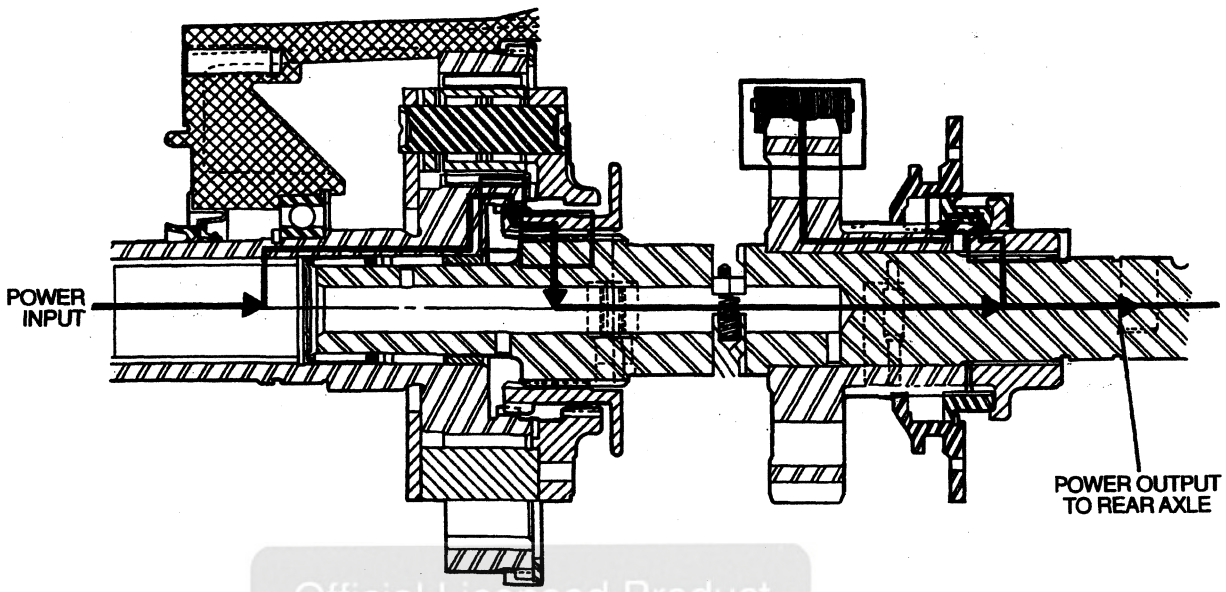

Official Licensed Product
Ford Motor Company

4-Wheel Drive — Low Range

To get maximum pulling capacity, the driver selects 4L. When this happens, the shift collar hub moves rearward, and the front planet is locked to the output and fifth gear drive shaft. With the ring gear unable to turn, the planetary gears "walk" around the inside. The result is that the front planet now turns more slowly than the input shaft. Because the front planet is now locked to the output and fifth gear drive shaft, the output shaft now rotates at a slower speed than the input shaft. This action increases the pulling capacity available to the wheels.

DESCRIPTION AND OPERATION (Continued)

Power Flow in 4L

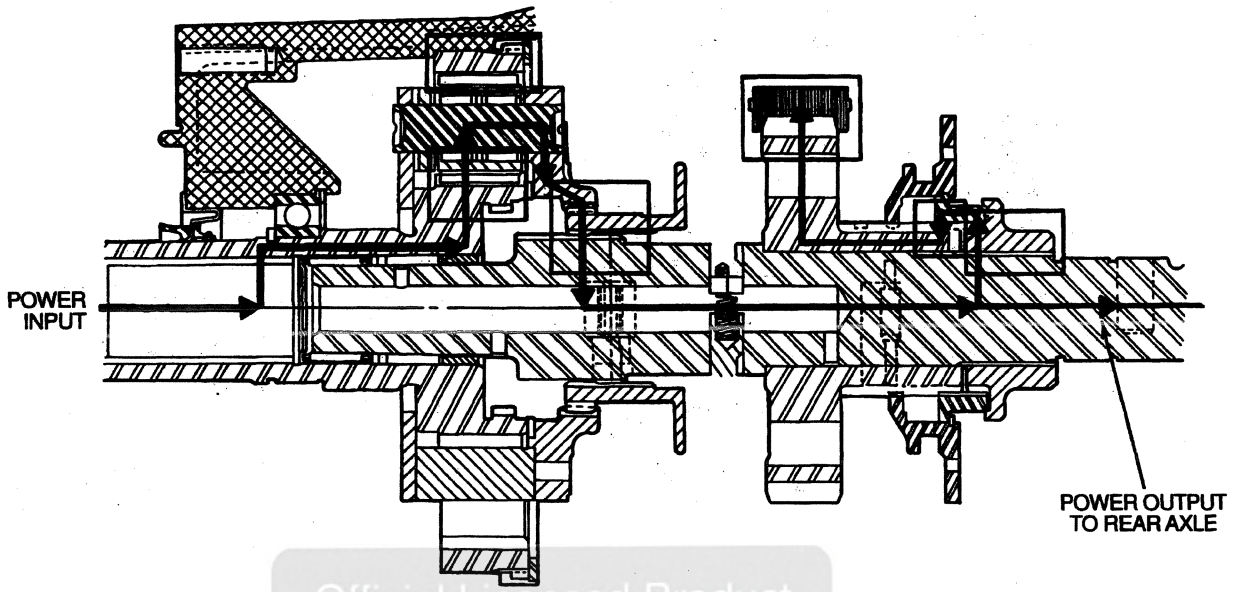

C11441-B

Official Licensed Product
Ford Motor Company

4-Wheel Drive Operation

Locking Hubs

There are two types of front hubs available for 4x4 vehicles.

- Manual (or free-running) that require the driver to get out of the cab to either lock or unlock them.
- Automatic locking (which lock automatically when the axle shaft begins to turn).

Manual (free-running) hubs feature seals that prevent entry of dirt and moisture and are very simple to operate. Automatic locking hubs use the front axle shaft rotation to actuate a cam that locks and unlocks the hub. Locking hubs may be locked at any time, and can be left in the locked position all the time, if desired.

On vehicles equipped with a manual shift transfer case (7A195) and manual locking hubs, low range can be selected when the vehicle's front hubs are unlocked. This is useful for short distances if very low, creeper gearing (but not 4WD) is needed. Refer to Section 04-01B in the Body, Chassis Manual for diagnosis, testing and repair procedures.

In 4WD, the front hubs are locked (either automatically or manually). As a result, the front wheels are no longer free to turn independently. The front and rear driveshafts are also now locked together and must turn as one.

In 4WD, just as in 2WD, each front wheel travels further than the rear wheel on its side. But this time, the front wheels aren't free to turn independently of the rear wheels. They are linked to the drivetrain by the transfer case and front driveshaft.

Points of Possible Slippage, Four-Wheel Drive

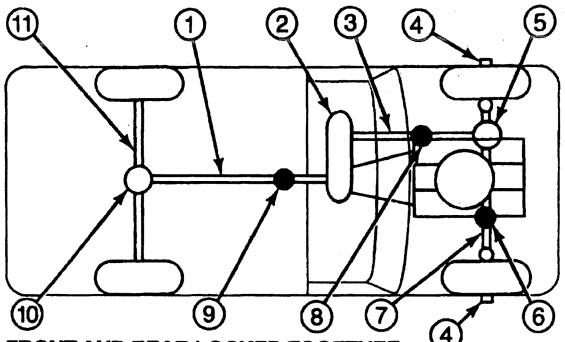

FRONT AND REAR LOCKED TOGETHER C11517-B

Item	Part Number	Description
1	4602	Driveshaft
2	7A195	Transfer Case
3	4602	Driveshaft
4	3B366	Locking Hub

(Continued)

DESCRIPTION AND OPERATION (Continued)

Item	Part Number	Description
5	4026	Differential
6	4841	Driveshaft Slip Yoke
7	3010	Front Axle
8	4841	Driveshaft Slip Yoke
9	4841	Driveshaft Slip Yoke
10	4026	Differential
11	4006	Rear Axle Assembly

Even though difference between the inner and outer front wheels is compensated for by a front differential, torsional windup is still going to occur.

- Anytime one driveline component travels further than another, there will be driveline or torsional windup that must be released.

4WD in a 4x4 provides increased drive traction and performance in off-road situations and when driving on snow or ice. It is not designed for operation on dry surfaces and when traction is good. It is not suitable on dry paved roads or dry parking lots. Where 4WD should and shouldn't be used gives us the answer as to what releases the driveline or torsional windup.

When a 4x4 is driven off-road in 4WD, the wheels are in contact with dirt, sand and sometimes mud. The vehicle is also likely to bounce over bumps and ruts.

- In turns under these conditions, driveline or torsional windup will occur. If it does, the loose dirt or sand or the slippery mud will allow wheels to slip a little, limiting the windup. Tension is also relieved when the wheel bounces in the air going over a bump. Snow and ice will also allow the wheels to slip and limit the windup.

When operating in 4WD on dry hard pavement, even more torsional windup occurs which is not easily released. When the windup becomes great enough, the driver will feel the vehicle hop, skip or bounce. This is caused by the front or rear wheels slipping as the windup is released. Whichever wheels have the least traction are the ones that will slip.

- The tighter the turn, or the greater the traction, the greater the hop, skip or bounce. This torsional driveline windup is the cause of many owner complaints concerning the performance of their 4x4 vehicles.

The following illustration shows that tires of even slightly different sizes roll different distances every revolution (see A). The same effect is true for tires that are the same size but inflated or loaded differently (see B). Operating a 4x4 in 4WD with tires of different size or inflation will produce driveline or torsional windup, even when driving straight ahead. If the vehicle is being driven in 4WD on dry, hard pavement, the driver will notice drag and may experience the hop, skip, bounce effect as the front or rear wheels release the windup.

Tire Rolling Differences Due to Size and Inflation Pressure

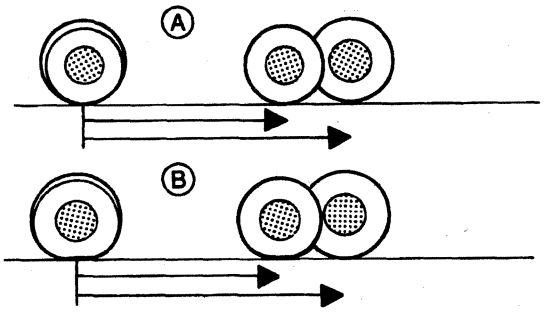

C11462-A

4x4 Vehicle Driveline Windup

Driveline windup does more than just produce hop, skip and bounce. It can also cause delays in shifting out of 4WD. The vehicle must be stopped and the automatic transmission (7003) put in neutral (not park) or the manual transmission clutch depressed in order to shift from 4H to 4L or back.

Windup and Delay — Shifting Out of 4-Wheel Drive

NOTE: To determine if driveline windup is causing delayed shifts to 2WD, jack the vehicle or lift it on a hoist with the wheels free to rotate. This should release the driveline windup, if it is present, and the transfer case (7A195) will complete its shift, if windup is the concern.

NOTE: Vehicles vary in terms of how "tight" they are. Some vehicles have a lot of "give" in the system. Softness in suspension and mounts will allow the driveline to absorb more windup before it affects performance. If driveline windup occurs, the system will tighten like a giant rubber band until the tires start slipping. A "tight" vehicle will signal the windup sooner, usually by a lot of chattering noises.

A delay or a failure to shift out of 4WD may be the result of driveline windup or extremely cold temperatures. In 4WD, windup can develop, especially if the vehicle is operated on hard, dry surfaces or in tight turns. The driver may select 2WD, but the shift doesn't take place even though the 4WD light goes out. Also, as long as the transfer case doesn't shift, the hubs remain locked and the vehicle remains in 4WD. If windup in the transfer case is severe, even backing up may not release it.

DESCRIPTION AND OPERATION (Continued)

In order to return to 2WD under these conditions, two things must happen. First, if the transfer case doesn't shift right away, the vehicle will have to be driven in 4WD until the windup is relieved or until the axle warms up. Second, then it does make the shift, the driver will have to stop the vehicle and go straight in the reverse direction for at least ten feet to unlock the hubs.

DIAGNOSIS AND TESTING

Transfer Case

Inspection and Verification

Maintenance of the hubs is important. Easy shifting from one operating position to the other requires smooth movement of the inner clutch ring. This ring slides on splines which must be clean and well-lubricated. To prevent dirt and water from entering the hub unit, the oil seals must be very carefully installed. If the vehicle is operated where the hub is constantly submerged in water or mud, the hubs need to be serviced more frequently. The important thing is not to run for long periods with dirt and water in the hubs. Start with a short service interval and check for water and dirt. Stretch out the interval as experience shows how dirty they are actually getting.

1. NOTE: Owner driving habits, as well as road and weather conditions, should be noted.

   Road test the vehicle to verify the concern, noting road speed, engine speed and speed range where the vehicle concern is evident.
2. Raise the vehicle on a hoist and position suitable safety floor stands under the vehicle.
3. NOTE: If the area of concern is indicated to be other than the transfer case (7A195), refer to the specific section or sections of the appropriate shop manual.

   Run the vehicle at the road speed and in the axle drive mode (4WD / 2WD) where concern exists. Verify concern area:

   - engine
   - clutch / transmission (7003)
   - transfer case
   - front / rear driveline components
   - front / rear drive axles
   - front / rear brake systems
   - front axle locking hubs
   - front / rear wheels or tires
4. Refer to the appropriate owner guide for operating data, if the concern is verified to be driveline or torsional windup, before servicing the transfer case.
5. If the 4WD system slips under load, find what has broken or is slipping. To locate where slip is taking place, put marks at various possible slip points. Test drive the vehicle, then check to see if marks at different points are still in the same relationship to each other. This will indicate where the slippage is taking place or where to look for broken parts, if any.
   a. On vehicles with automatic locking hubs, find a suitable place where the vehicle can be tested. Mark the components, then drive vehicle without backing up. Stop and check the marks to see if they are in the same relationship to each other. If the vehicle is backed up before checking these marks, the hubs may reindex and not reveal the concern.
6. Check tires and vehicle loading if the concern is clearly driveline windup and not broken parts.
7. If a manual shift lever fails to shift the transfer case, it will have to be serviced. Make sure driveline windup has been eliminated as a cause.
8. NOTE: A condition can arise if the vehicle is equipped with a limited slip front axle and the front tires are worn differently or are slightly different sizes. In this case, operating in 2WD with hubs locked can result in steering pull like a limited slip rear axle. This will disappear when the hubs are unlocked.

   Driveline noise may be experienced if a vehicle is operated in 2WD with the hubs locked. This occurs because the 4WD components are in motion instead of at rest (the normal condition in 2WD with the hubs unlocked). However, it is important to remember that excessive noise can be a sign of a serious condition.

SECTION 07-07B Transfer Case, Manual Shift

SUBJECT	PAGE
VEHICLE APPLICATION	07-07B-1
DESCRIPTION AND OPERATION	
Mechanical Shift System	07-07B-1
DIAGNOSIS AND TESTING	
Transfer Case	07-07B-2
REMOVAL AND INSTALLATION	
Gearshift Lever	07-07B-4
Indicator Switch	07-07B-2
Oil Seal	07-07B-4
Input Shaft Yoke to Flange	07-07B-4
Output Shaft, Rear Extension Housing	07-07B-4
REMOVAL AND INSTALLATION (Cont'd.)	
Output Yoke	07-07B-5
Transfer Case	07-07B-2
DISASSEMBLY AND ASSEMBLY	
Transfer Case	07-07B-5
ADJUSTMENTS	
Fluid Level Check	07-07B-18
Transfer Case	07-07B-18
Vehicles Equipped with a PTO	07-07B-18
SPECIFICATIONS	07-07B-19
SPECIAL SERVICE TOOLS/EQUIPMENT	07-07B-19

VEHICLE APPLICATION

F-350 Chassis Cab with 137-Inch Wheelbase and E4OD Transmission

DESCRIPTION AND OPERATION

Official Licensed Product Ford Motor Company

Mechanical Shift System

The Borg-Warner 13-56 is a manual shift, part-time, three-piece transfer case (7A195). The case is magnesium and has an opening for a power takeoff (PTO). The unit is lubricated by a positive-displacement oil pump that channels oil flow through drilled holes in the rear output shaft. The pump turns with the rear output shaft, and allows towing of the vehicle with the transfer case in NEUTRAL position and without disconnecting the rear driveshaft (4A376).

DESCRIPTION AND OPERATION (Continued)

The input shaft (7017), front output shaft, 4WD indicator switch and shift lever are located on the front case half. The rear output shaft, output shaft slip-yoke type bearing retainer and drain and fill plugs are located on the rear case half.

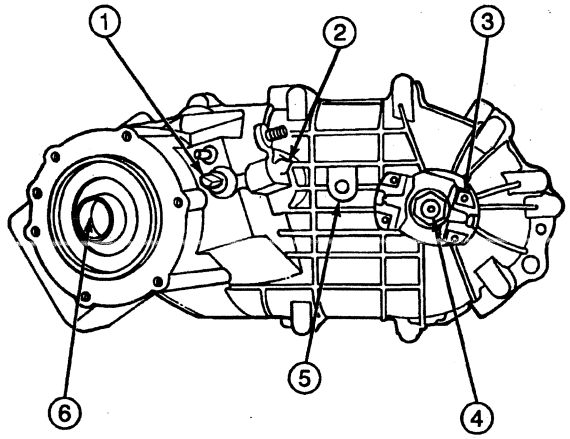

FRONT VIEW

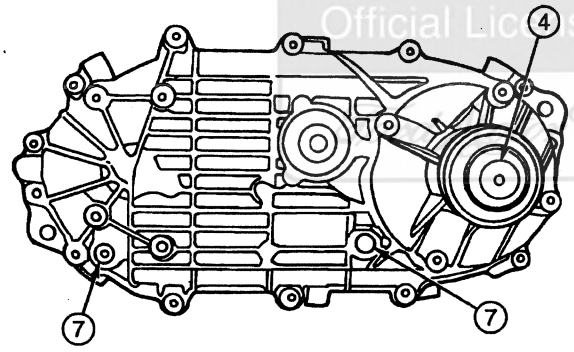

REAR VIEW C7860-E

Item	Part Number	Description
1	7E440	4WD Indicator Switch
2	7B106	Shift Lever
3	7B214	Case Yoke
4	7061	Output Shaft
5	87675-S	Fill Plug for PTO Use
6	7017	Input Shaft
7	7A010	Fill/Drain Plug

DIAGNOSIS AND TESTING

Transfer Case

Refer to Section 07-07A.

REMOVAL AND INSTALLATION

Indicator Switch

Refer to Transfer Case in the Disassembly and Assembly portion of this section.

Transfer Case

Removal

CAUTION: A three way catalytic converter (TWC)(5E212) is located beside heat shield. Be careful when working around three way catalytic converters because of the extremely high temperatures generated by the three way catalytic converter.

1. Raise vehicle on a hoist and position suitable safety stands under vehicle.
2. Remove skid plate, if so equipped.
3. NOTE: Drain transfer case (7A195) only if disassembly is required.

   Place a drain pan under transfer case, remove drain plug and drain fluid from transfer case.
4. Disconnect 4WD indicator switch wire connector at transfer case.
5. Disconnect front driveshaft (4A376) from front case yoke (7B214).
6. Remove rear driveshaft. Refer to Section 05-01.
7. Disconnect vent hose from transfer case.
8. **CAUTION: When removing the control rod from the gearshift lever (7210), do so very gently so as not to damage the gearshift lever.**

   Disconnect the control rod between the transfer case shift lever and the gearshift lever.
9. Support transfer case with Rotunda Hi-Lift Transmission Jack 014-00942 or equivalent.
10. Remove the bolts retaining transfer case to extension housing (7A039).
11. Slide transfer case rearward off of the transmission output shaft, and lower transfer case from vehicle. Remove extension housing gasket (7086) between transfer case and extension housing.

Installation

1. Clean transmission and extension housing gasket mating surfaces. Install a new extension housing gasket.

Official Licensed Product

REMOVAL AND INSTALLATION (Continued)

2. Raise the transfer case with the transmission jack so that the transmission output shaft aligns with the splined transfer case input shaft. Slide the transfer case forward onto the transmission output shaft and onto the dowel pin. Install the six transfer case retaining bolts to the extension housing. Tighten the bolts to 41-54 N·m (30-40 lb-ft) in the sequence shown.

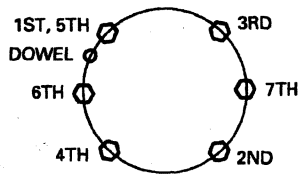

C7434-B

3. Remove transmission jack from transfer case.
4. Install rear driveshaft. Refer to Section 05-01.
5. Connect vent hose to transfer case.
6. Attach the control rod between the transfer case shift lever and the gearshift lever.
7. Connect 4WD indicator switch wire connector at transfer case.
8. Connect front driveshaft to front output case yoke. Refer to Section 05-01.
9. Install skid plate to frame (5005), if so equipped. Tighten nuts and bolts to 20-27 N·m (15-20 lb-ft).
10. If removed, install drain plug and tighten to 9-23 N·m (7-17 lb-ft).
11. As required, check or refill fluid with Motorcraft MERCON® ATF XT-2-QDX or MERCON® equivalent. Refer to Fluid Level Check in the Adjustments portion of this section.
12. Remove safety stands and lower vehicle.

Borg-Warner 13-56 Transfer Case

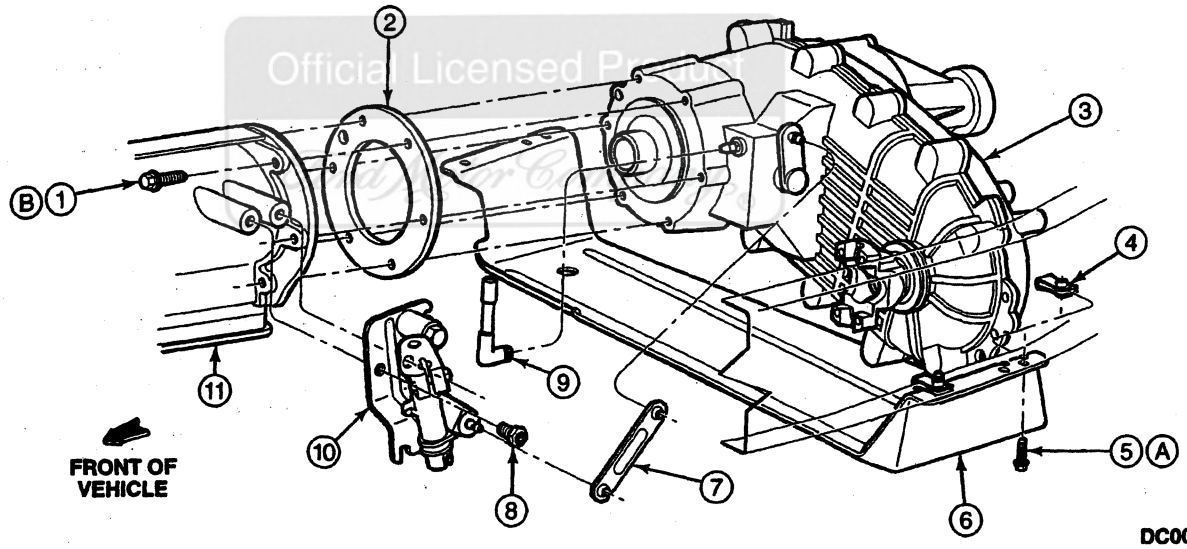

DC0007-A

Item	Part Number	Description
1	N605804-S100	Bolt
2	7086	Extension Housing Gasket
3	7A195	Transfer Case
4	N804340-S2	Nut
5	N605906-S2	Bolt
6	7E063	Skid Plate
7	7A315	Control Rod

(Continued)

Item	Part Number	Description
8	391219-S2	Bolt
9	7A246	Breather Tube
10	7E069	Gearshift Lever
11	7003	Transmission
A	—	Tighten to 20-27 N·m (15-20 Lb-Ft)
B	—	Tighten to 41-54 N·m (30-40 Lb-Ft)

REMOVAL AND INSTALLATION (Continued)

Gearshift Lever

NOTE: Remove the gearshift lever knob (7213) only if the gearshift lever knob, gearshift lever boot (7277) or shift control selector lever is being replaced.

Removal

1. Shift transfer case (7A195) into 2H.
2. Raise vehicle on hoist and position suitable safety stands under vehicle.
3. Loosen (do not remove) the nut retaining the shift handle to the gearshift lever (7210). Remove the shift handle from the gearshift lever.
4. Remove the vent hose from the notch in the detent plate.
5. **CAUTION: When removing the control rod from the gearshift lever, do so very gently so as not to damage the shift control selector lever.**

   Remove the control rod from the gearshift lever.
6. Loosen (do not remove) the large pivot bolt holding the gearshift lever to the detent plate.
7. Swing the gearshift lever out of the way and remove the two bolts retaining the detent plate to the extension housing (7A039). Remove the entire gearshift lever from the vehicle.

Installation

1. NOTE: Prior to installation, the gearshift lever knob must be at room temperature and can be warmed to 60°C-82°C (140°F-180°F) as an assembly aid.

   NOTE: Prior to installing the gearshift lever, make sure the transfer case link is in the 2H position (pointing upward).

   Install the gearshift lever to the extension housing and tighten the two bolts to 96-122 N·m (71-90 lb-ft).
2. Attach the control rod to the gearshift lever.
3. Tighten the large pivot bolt to 92-125 N·m (68-92 lb-ft).
4. Attach the vent hose into the notch in the detent plate so the white mark is flush to the outside surface of the plate.
5. Install the shift handle into the gearshift lever. Tighten the retaining nut to 27-38 N·m (20-28 lb-ft).
6. NOTE: Shift pattern must be parallel within ±10 degrees of vehicle centerline.

   Check transfer case for proper shifting and operation.
7. Remove safety stands and lower vehicle.

Oil Seal

Input Shaft Yoke to Flange

Refer to Transfer Case in the Disassembly and Assembly portion of this section.

Output Shaft, Rear Extension Housing

SPECIAL SERVICE TOOL(S) REQUIRED

Description	Tool Number
Extension Housing Seal Replacer	T61L-7657-B

Removal

1. Raise the vehicle on a hoist and position suitable safety stands under vehicle.
2. Remove rear driveshaft (4A376). Refer to Section 05-01.

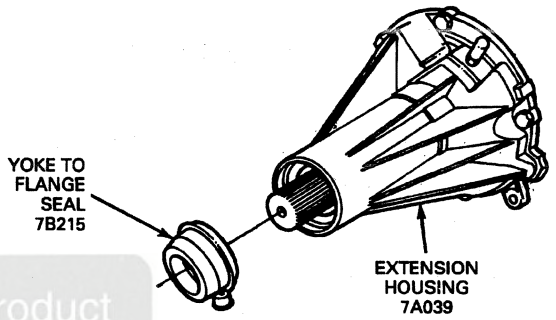

C7863-D

3. Using a screwdriver, pry the yoke to flange seal (7B215) from the bearing retainer. Discard the yoke to flange seal.

Installation

1. **CAUTION: If the bushing in the extension housing is damaged, it must be replaced with the extension housing as an assembly.**

   Position the yoke to flange seal in the retainer so the notch on the yoke to flange seal faces upward and the drain hole in the rubber dust boot faces downward. Drive the yoke to flange seal in the retainer using Extension Housing Seal Replacer T61L-7657-B.

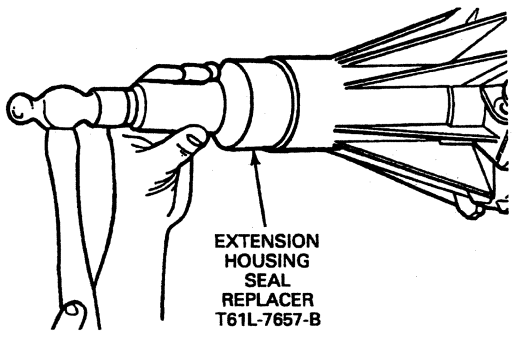

C5905-B

2. Install driveshaft. Refer to Section 05-01.
3. Remove safety stands and lower vehicle.

Ford Licensed Product

REMOVAL AND INSTALLATION (Continued)

Output Yoke

Removal

1. Raise the vehicle on a hoist and position suitable safety stands under vehicle.
2. Disconnect the front driveshaft from the transfer case. Wire the driveshaft out of the way. Refer to Section 05-01.
3. Remove the 32 mm shaft nut (7045), output shaft yoke washer (7B368), oil seal (7052) and the case yoke (7B214).
4. Remove the yoke to flange seal from the rear output housing bore with a screwdriver.

Installation

1. **CAUTION: Prior to seal installation, make sure the output housing bore and face are free of nicks and burrs.**

   Position the yoke to flange seal into the output housing bore, making sure that the seal is not cocked in the bore. Drive the yoke to flange seal into the bore with a suitable output shaft seal replacer.
2. Install the case yoke, oil seal, output shaft yoke washer and shaft nut. Tighten the nut to 203-244 N·m (150-180 lb-ft).
3. Connect the driveshaft to the transfer case output shaft case yoke. Refer to Section 05-01.
4. Check fluid level. Refer to Fluid Level Check in the Adjustments portion of this section. Adjust as required.
5. Remove safety stands and lower the vehicle from the hoist.

DISASSEMBLY AND ASSEMBLY

Transfer Case

SPECIAL SERVICE TOOL(S) REQUIRED

Description	Tool Number
Bench Mounted Holding Fixture	T57L-500-B
Impact Slide Hammer	T50T-100-A
Bearing Cup Replacer	T73T-1202-A
Driver Handle	T80T-4000-W
Bearing Cup Replacer	T73T-1202-B
Bearing Cup Replacer	T80T-4000-P
Output Shaft Seal Replacer	T86T-7034-CH
Extension Housing Seal Replacer	T61L-7657-B

Disassembly

1. Remove transfer case (7A195) from vehicle. Refer to Transfer Case in the Removal and Installation portion of this section.

Ford Motor Company

DISASSEMBLY AND ASSEMBLY (Continued)

Transfer Case, Manual Shift, 13-56

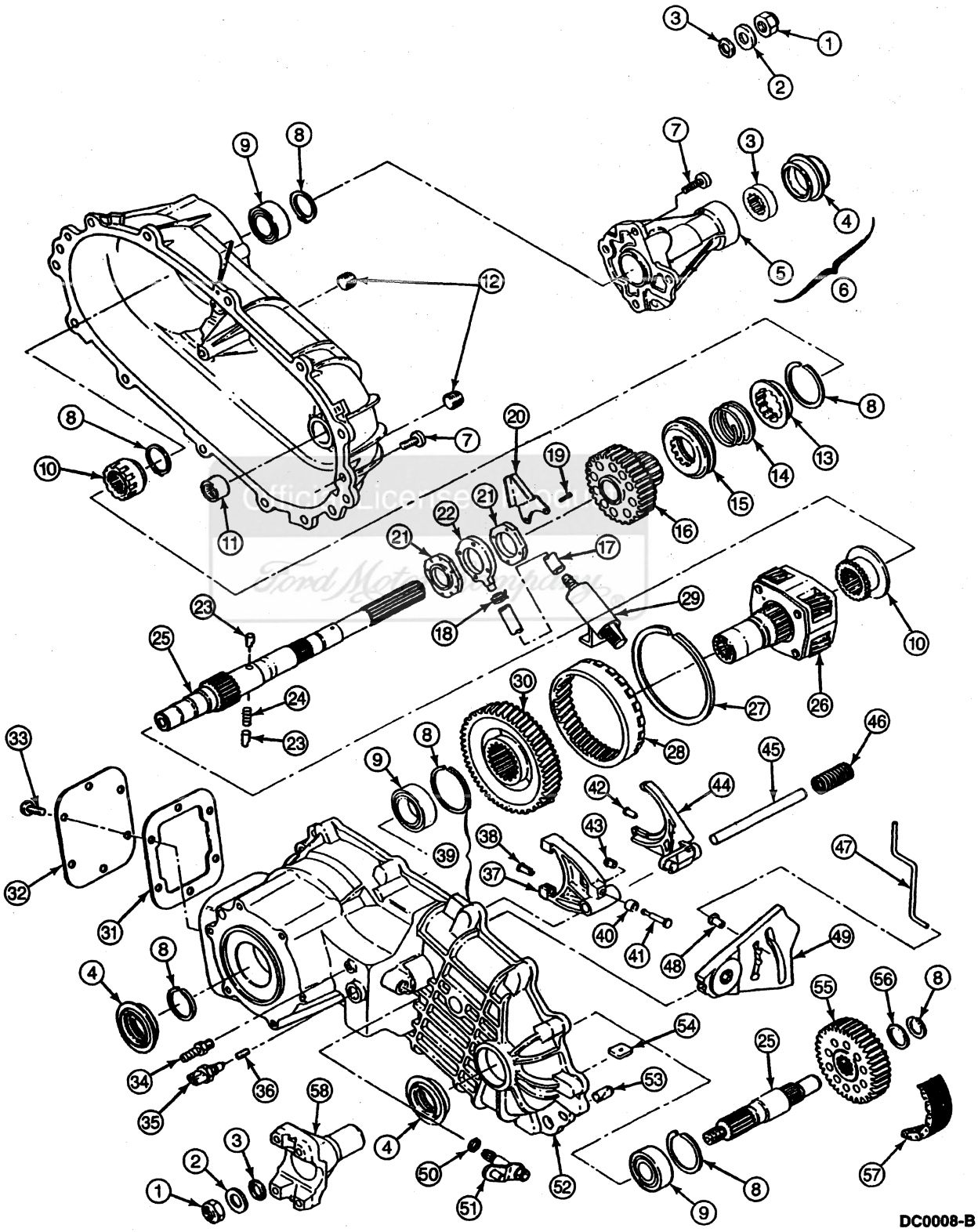

DISASSEMBLY AND ASSEMBLY (Continued)

Item	Part Number	Description
1	7045	Shaft Nut
2	7B368	Output Shaft Yoke Washer
3	7052	Oil Seal
4	7B215	Yoke to Flange Seal
5	—	Extension (Rear Spline) Cap, Bearing (Rear Yoke/Flange) (Serviced As Part of 7085 Assy)
6	7085	Extension Assembly (Rear Spline) Cap Assy, Bearing (Rear Yoke/Flange)
7	7A443	Bolt and Washer Assy
8	7917	Ring, Snap
9	7025	Bearing
10	7100	Shift Collar Hub
11	7127	Caged Needle Bearing
12	7A010	Plug, Pipe
13	7D164	Lockup Hub
14	7D126	Spring, Lockup
15	7106	Lockup Collar
16	7177	Sprocket, Drive
17	7A210	Hose
18	382486-S	Clamp, Hose
19	7A291	Transfer Housing to Case Bolt
20	7E215	Retainer, Pump
21	7A152	Cover, Pump
22	7A149	Housing, Pump
23	7A250	Pin, Pump
24	7A205	Spring, Pump Pin
25	7061	Output Shaft
26	7A398	Front Planet
27	7C122	Ring, Retaining
28	7A153	Ring Gear

(Continued)

Item	Part Number	Description
29	7A098	Filter, Oil
30	—	Gear, PTO (Part of 7A398)
31	7166	Case Deflector Gasket
32	7165	Transfer Case Cover
33	381673-S	Bolt
34	7034	Vent
35	7E440	4WD Indicator Switch
36	—	Setscrew (Part of 7E440)
37	—	Fork, Reduction (Part of 7289)
38	—	Facing, Shift Fork (Part of 7289)
39	7289	Reduction Assembly
40	—	Roller, Cam (Part of 7289)
41	—	Pin (Part of 7289)
42	—	Facing, Shift Fork (Part of 7289)
43	—	Retainer (Part of 7289)
44	—	Fork Assy, Shift, 2W-4W (Part of 7289)
45	7240	Shift Rail
46	7219	Shift Fork Spring
47	7C349	Spring, Detent
48	7C191	Bushing, Detent
49	7F063	Cam, Shift
50	7288	Shifter Shaft Seal
51	7B106	Lever, Shaft and Pin Assy
52	7005	Case
53	—	Pin Dowel (Part of 7005)
54	7L027	Oil Pan Magnet
55	7177	Sprocket, Driven
56	7119	Thrust Washer
57	7A029	Chain, Drive
58	—	Yoke (Part of 7B214)

Licensed Product Motor Company

DISASSEMBLY AND ASSEMBLY (Continued)

2. Remove the shaft nut (7045), output shaft yoke washer (7B368), oil seal (7052) and the case yoke (7B214).

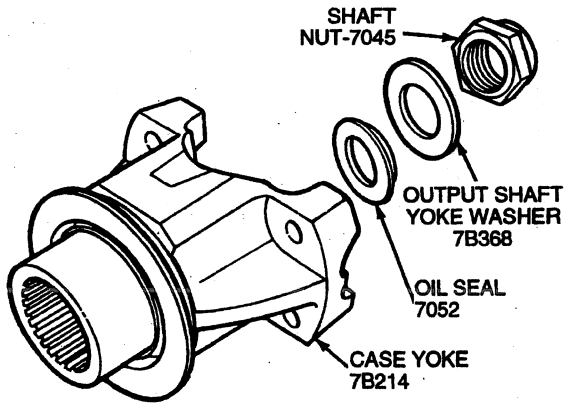

FRONT OUTPUT SHAFT YOKE C7853-E

3. **CAUTION: Aluminum spacer washer is required for proper switch operation and must be reinstalled during transfer case assembly.**

   Remove the 4WD indicator switch and aluminum spacer washer.

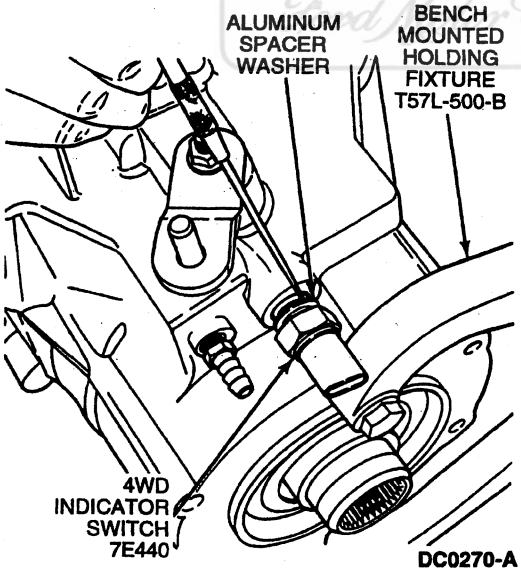

DC0270-A

4. Remove the front and rear output shaft yoke to flange seals (7B215), using a screwdriver.
5. Remove the input shaft yoke to flange seal, using screwdriver.
6. **CAUTION: When removing RTV sealant, use care not to damage the mating surfaces of the magnesium cases (7005).**

   Remove the four No. 50 Torx® head bolts (7A443) retaining the rear slip yoke extension housing to the case. Insert a 1/2-inch breaker bar between the pry bosses and separate the housing from the case. Remove the housing and all traces of silicone rubber from the mating surfaces.

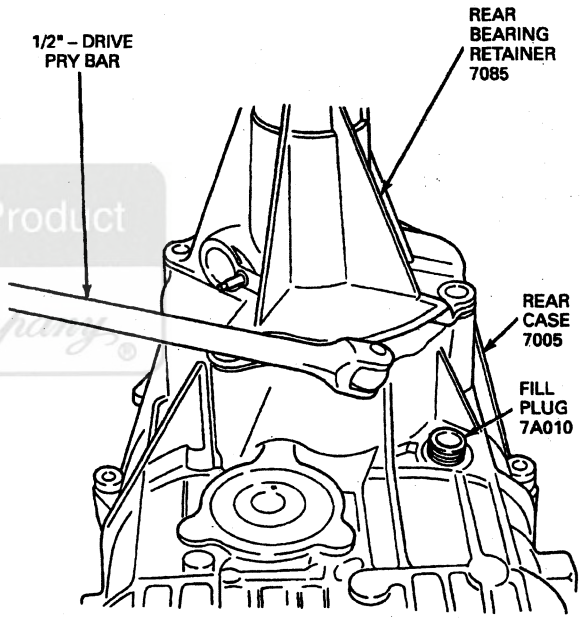

C7869-B

7. Using snap ring pliers, remove the snap ring on the rear output shaft retaining the upper rear bearing (7025).

Official Licensed Product
Ford Motor Company®

DISASSEMBLY AND ASSEMBLY (Continued)

8. **CAUTION: When removing the silicone rubber, use care not to damage the mating surfaces of the magnesium cases.**

   Remove the 12 No. 50 Torx® head bolts that retain the front case to the rear case. Insert a 1/2-inch drive breaker bar between the pry bosses and separate the case halves. Lift the front case from the rear case. Remove all traces of RTV gasket sealant from the case mating surfaces.

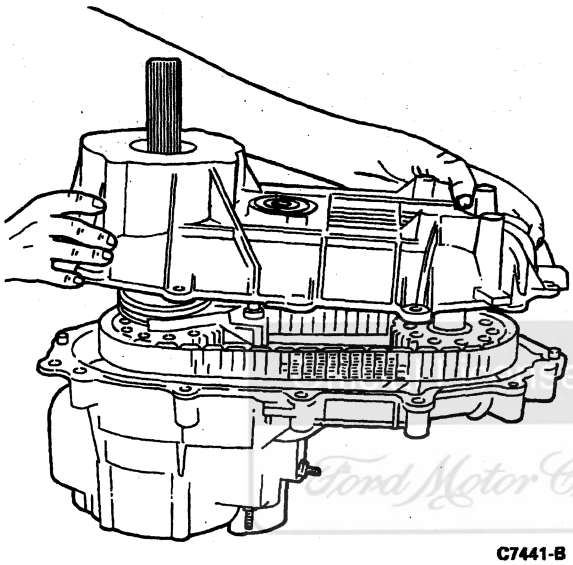

C7441-B

9. Remove front output shaft caged needle bearing from the rear case with Impact Slide Hammer T50T-100-A and Collet D80L-100-T from Blind Hole Puller Set D80L-100-A or equivalent.

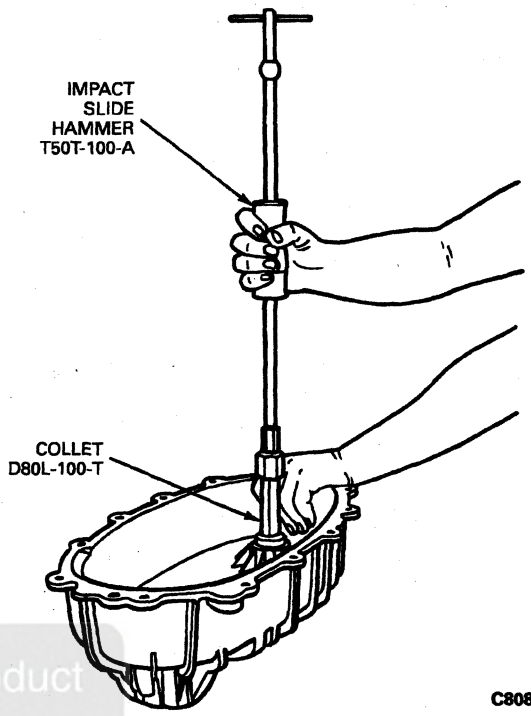

C8082-B

10. **CAUTION: Use care not to damage the case.**

    Drive out the rear output shaft bearing from the inside of the rear case, using a brass drift and tapping lightly with a small hammer.

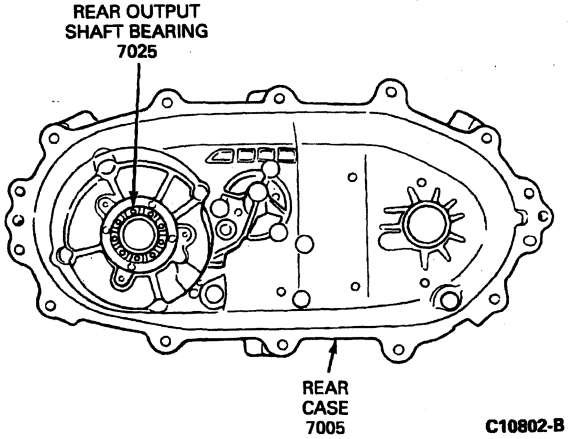

C10802-B

Ford Motor Company

DISASSEMBLY AND ASSEMBLY (Continued)

11. Remove the snap ring from the output shaft securing the shift collar hub. Slide the shift collar hub off of the output shaft.

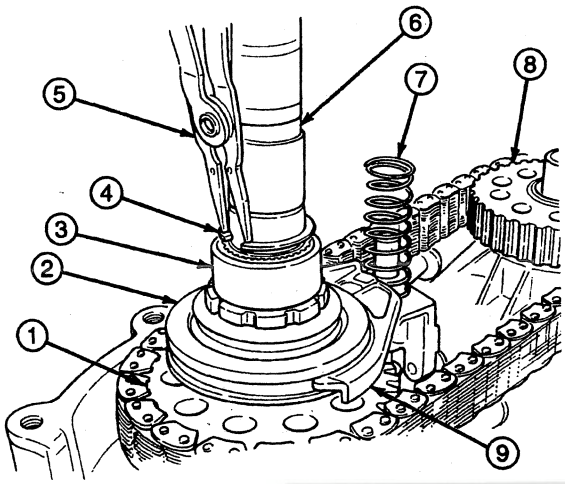

C7872-D

Item	Part Number	Description
1	7177	Drive Sprocket
2	7106	Lockup Collar
3	7100	Shift Collar Hub
4	7917	Snap Ring
5	—	Snap Ring Pliers
6	7061	Output Shaft, Rear
7	7219	Shift Fork Spring
8	7177	Driven Sprocket
9	—	2W-4W Shift Fork (Part of 7289)

12. Remove the shift fork spring from the shift rail and lift the shift mode (2WD / 4WD) fork complete with the shift collar hub from the rear output shaft.

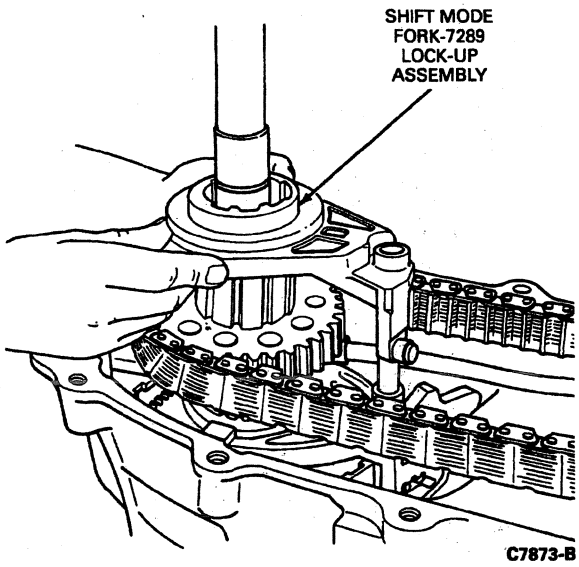

C7873-B

13. Disassemble the 2W-4W lockup assembly by removing the internal snap ring and pulling the lockup hub and spring from the lockup collar.

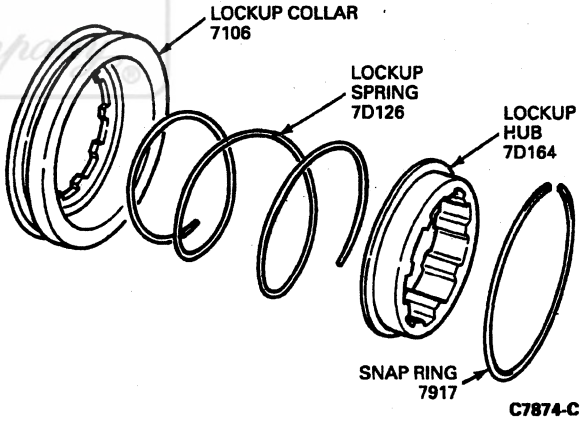

C7874-C

Official Licensed Product

DISASSEMBLY AND ASSEMBLY (Continued)

14. Remove the snap ring retaining the driven sprocket to the front output shaft. Grasp the drive and driven sprocket complete with the chain and lift them at the same time from the drive and driven output shafts.

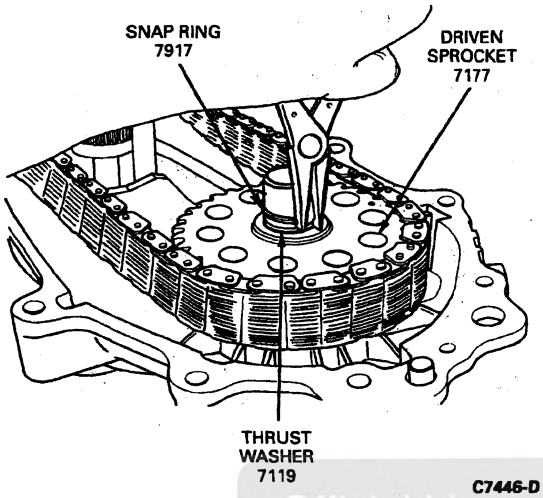

15. Remove the front output shaft.
16. Remove the shift rail by sliding it straight out from the shift fork.
17. **CAUTION: Do not disassemble oil pump unless the oil pump retaining bracket has been bent or broken, or pump damage is indicated. Indications of pump damage are blueing or blackening of the pump, or loosening of the pump bolts.**

    NOTE: To facilitate installation, note the position of the pump front body, pins, spring, rear cover and pump retainer as removed.

    Lift out the pump screen and remove the output shaft with the pump assembled on it. If the pump is to be disassembled, remove the four bolts from the pump body.

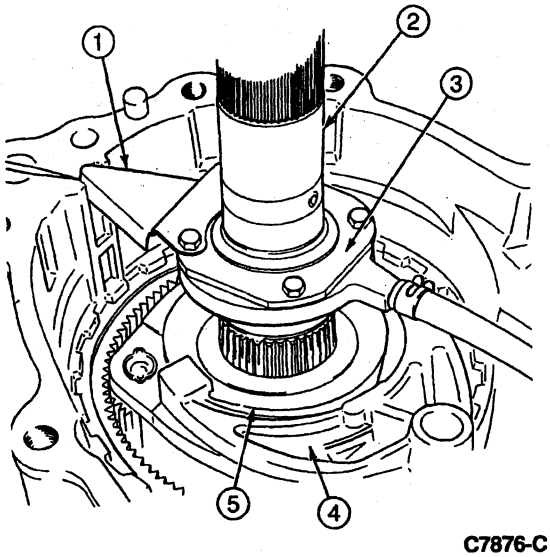

Item	Part Number	Description
1	7E215	Oil Pump Retainer
2	7061	Output Shaft, Rear
3	7A149	Oil Pump
4	—	High-Low Shift Fork (Part of 7289)
5	7100	Shift Collar Hub

18. Remove the oil pan magnet (7L027) from its slot in the case.
19. Remove the high-low shift fork by first rotating it until the roller is free from the cam, then sliding out of engagement from the shift collar hub.
20. Remove the shift collar hub.

Official Licensed Product
Ford Motor Company

DISASSEMBLY AND ASSEMBLY (Continued)

21. Reaching through the front opening with a pair of snap ring pliers, carefully expand the snap ring on the input shaft, allowing it to drop out of the bearing. The front planet (7A398), including the input shaft, is serviced as an assembly only. If the bearing or bushing is to be replaced, drive out both of them through the input spline using suitable tools, such as a brass drift and a small hammer, being careful not to damage the case.

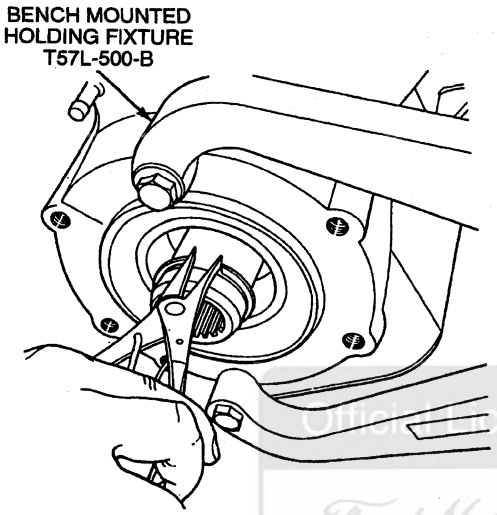

DC0271-A

22. Remove the ring gear (7A153) by prying out the internal snap ring with a screwdriver and lifting out the gear.

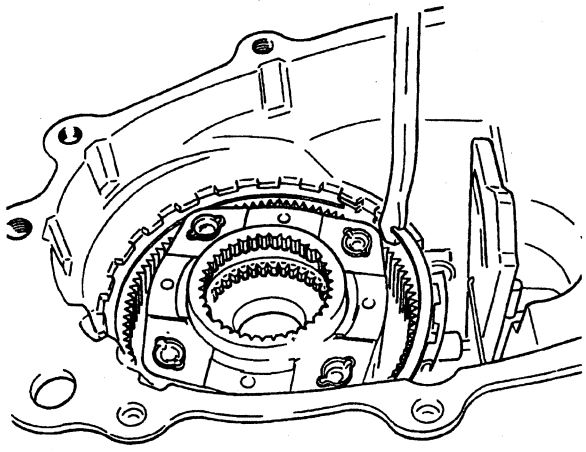

C7877-B

23. Remove the internal snap ring securing the input shaft bearing to the case.

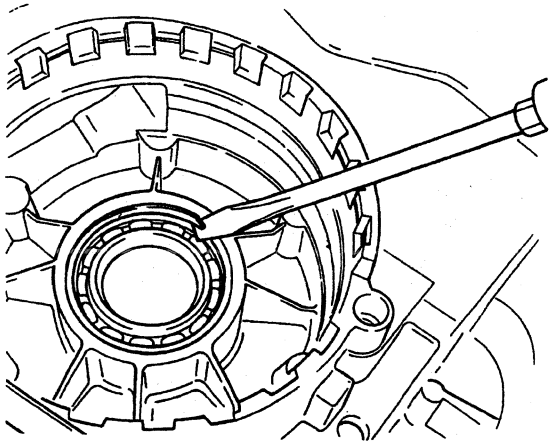

C7879-B

24. Remove the input shaft bearing, using Bearing Cup Replacer T73T-1202-A and Driver Handle T80T-4000-W.

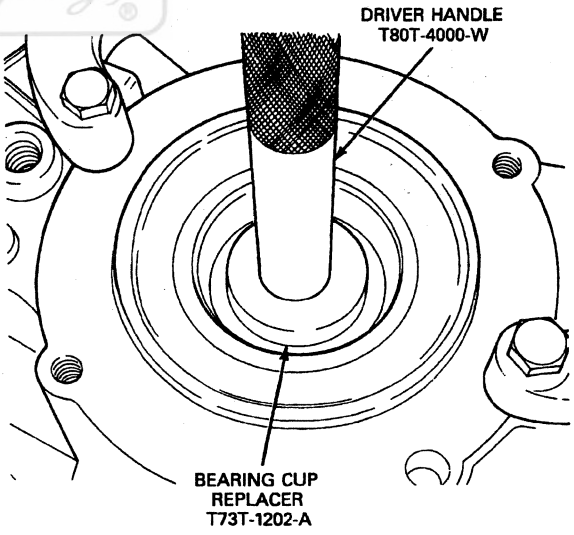

C7880-D

Official Licensed Product
Ford Motor Company

DISASSEMBLY AND ASSEMBLY (Continued)

25. Remove the internal snap ring securing the front output shaft bearing in the case.

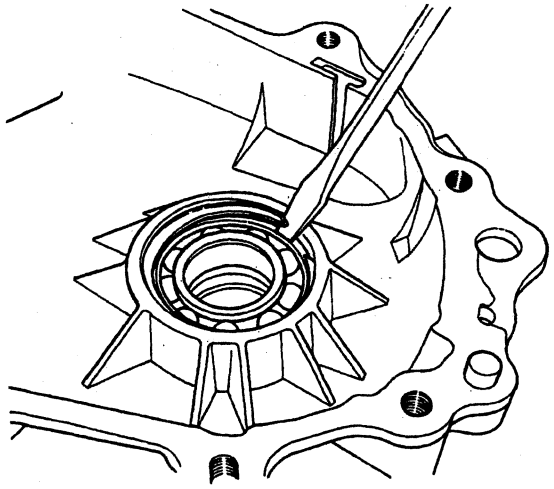

C7852-B

26. Drive the bearing out from the front of the case, using Bearing Cup Replacer T73T-1202-B and Driver Handle T80T-4000-W.

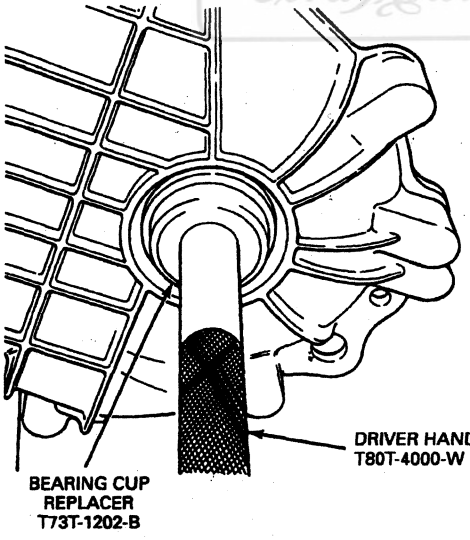

C7881-C

27. Place the shift lever in the NEUTRAL position so the shift cam setscrew can be seen through the hole for the 4WD indicator switch.
28. Remove the setscrew, using a hex key tool.
29. Remove the shift lever by sliding it out of the case.
30. Remove the shift cam detent spring and bushing.
31. Remove the shifter shaft seal (7288) by carefully prying it out of the case, being careful not to damage the case.

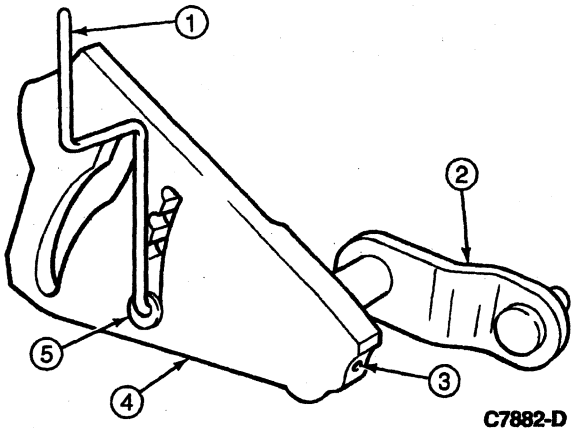

C7882-D

Item	Part Number	Description
1	7C349	Shaft Cam Detent Spring
2	7B106	Shift Lever
3	—	Setscrew Hole (Part of 7F063)
4	7F063	Shift Cam
5	7C191	Bushing

Assembly

Before assembly, lubricate all parts with Motorcraft MERCON® ATF XT- 2-QDX or MERCON® equivalent. Remove all chips from the bolt holes in the case.

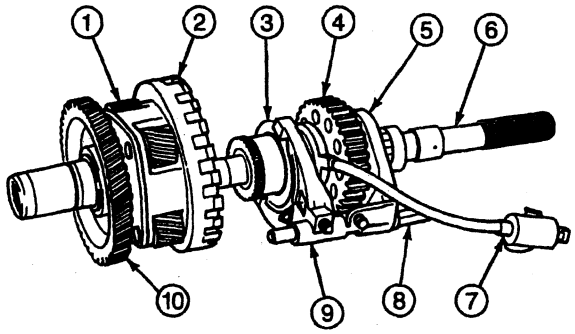

C7883-B

Item	Part Number	Description
1	7A398	Front Planet and Input Shaft
2	7A153	Ring Gear
3	7100	Shift Collar Hub
4	7177	Sprocket, Drive
5	—	2W/4W Shift Fork (Part of 7289)
6	7061	Output Shaft, Rear
7	7A149	Oil Pump and Pickup Tube
8	7240	Shift Rail

(Continued)

DISASSEMBLY AND ASSEMBLY (Continued)

Item	Part Number	Description
9	—	High / Low Shift Fork (Part of 7289)
10	—	PTO Gear (Part of 7A398)

1. Install the input shaft bearing and the front output shaft bearing in the case, using Bearing Cup Replacer T80T-4000-P and Driver Handle T80T-4000-W. Install the internal snap rings retaining the bearings in the case.

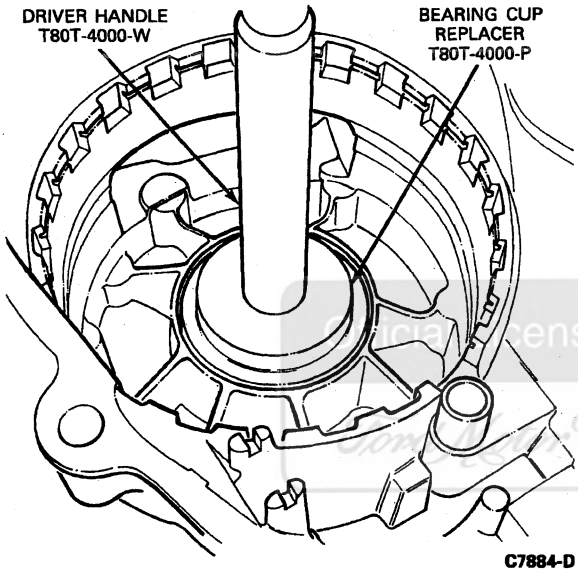

C7884-D

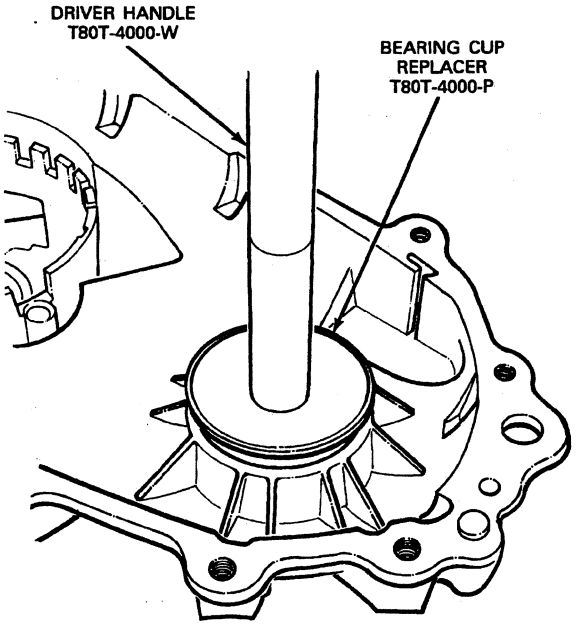

C7885-D

2. Drive the front output yoke to flange seal into the case until it is fully seated against the case, using Output Shaft Seal Replacer T86T-7034-CH.

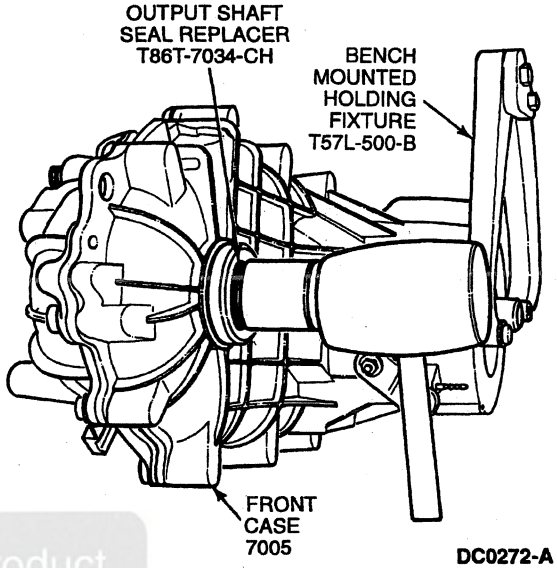

DC0272-A

3. NOTE: The front output shaft is held in place in the case by the front output yoke to flange seal and oil seal slinger.

   Install the front output shaft through the lower bearing. Install the front case yoke onto the front output shaft, then the oil seal, output shaft yoke washer and 32 mm shaft nut. Tighten the yoke shaft nut to 203-244 N·m (150-180 lb-ft).

4. **CAUTION: Make sure that the bearing and bushing are driven in straight.**

   Press the needle bearing and bronze bushing into the input shaft and carrier assembly with the appropriate tools.

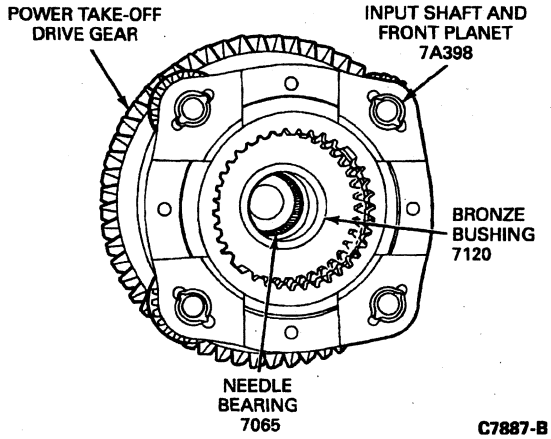

C7887-B

5. Install the ring gear into the slots in the case. Install the large internal snap ring, making sure that it is fully seated.

Ford Motor Company Licensed Product

DISASSEMBLY AND ASSEMBLY (Continued)

6. **CAUTION: Use care not to damage the gear teeth.**

   Install the input shaft and front planet in the case through the input shaft bearing.

7. While supporting the front planet in position, install a new snap ring on the front side of the input shaft bearing, making sure that it is fully seated in the snap ring groove of the input shaft.

8. Install the front input shaft yoke to flange seal into the case, using an appropriate tool, until it is fully seated against the case.

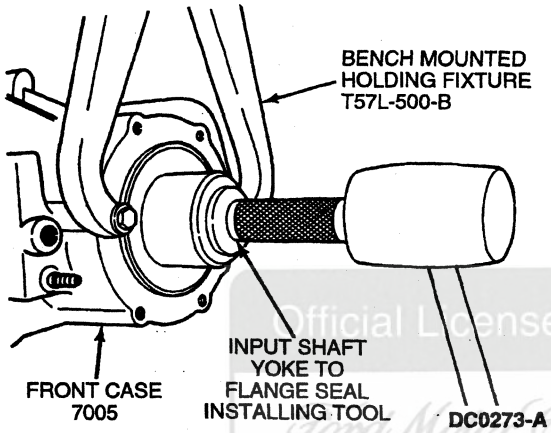

9. Install a new shifter shaft seal into the case, using an appropriate tool.

10. Position the detent spring, bushing and shift cam in the recess in the case.

11. Slide the shift shaft and lever through the case and seal and into engagement with the shift cam. Install the setscrew through the holes in the case for the 4WD indicator switch.

12. Lubricate all pump parts with clean automatic transmission fluid prior to assembly.

13. Assemble the pump and output shaft as follows:

    a. Place the oil pump cover with the word TOP facing the front of the case.

    b. Install the two pins (with the flats facing toward the rear of the vehicle) with the spring between the pins and place the assembly in the oil pump bore in the output shaft.

    c. Place the oil pump body and pickup tube over the output shaft and make sure that the pins are riding against the inside of the pump body.

    d. NOTE: The word TOP on the front cover and the rear cover should be on the same side.

    Place the oil pump rear cover with the words TOP REAR facing the rear of the output shaft.

    e. Install the pump retainer with the tabs facing the front of the transfer case.

    f. NOTE: The output shaft must turn freely within the oil pump. If binding occurs, loosen the four bolts and retighten as outlined.

    Install the four retaining bolts and rotate the output shaft while tightening the bolts to prevent the pump from binding. Tighten bolts to 4-4.5 N·m (35-40 lb-in).

Official Licensed Product Ford Motor Company

Rear Output Shaft and Oil Pump Installation

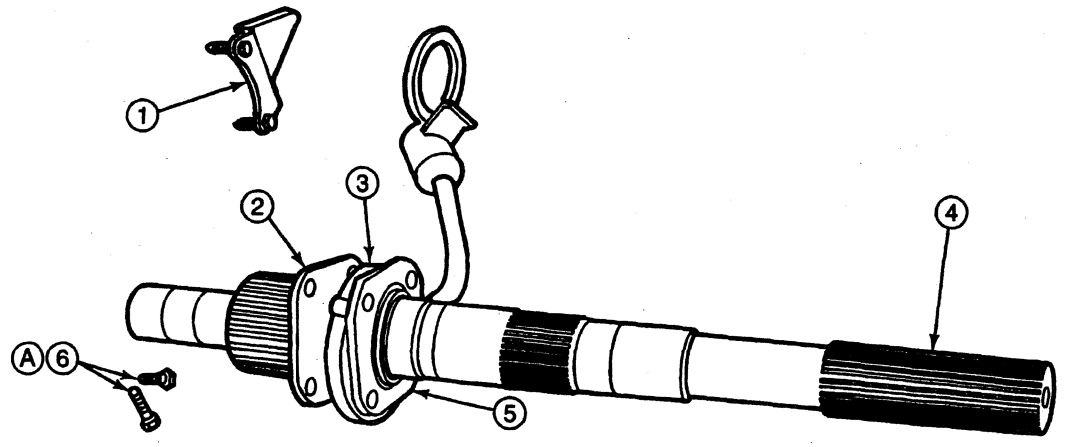

Item	Part Number	Description
1	7E215	Pump Retainer
2	7A152	Oil Pump Front Cover
3	7A149	Oil Pump Body and Pickup Tube

(Continued)

Item	Part Number	Description
4	7061	Output Shaft
5	7A152	Oil Pump Rear Cover
6	7A291	Retaining Bolts
A	—	Tighten Bolts to 4-4.5 N·m (35-40 Lb-In)

DISASSEMBLY AND ASSEMBLY (Continued)

14. Install the shift collar hub. Install the high-low shift fork by engaging it with the shift hub flange and rotating it until the roller is engaged with the lower groove of the cam.
15. Install the shift rail through the high-low fork bore and into the rail bore in the case.
16. **CAUTION: Make sure the external splines of the output shaft engage the internal splines of the shift collar hub. Make sure the oil pump retainer and oil filter leg are in the groove and notch of the front case.**

    Install the output shaft and oil pump in the input shaft. Install the oil pan magnet in the slot in the front case.

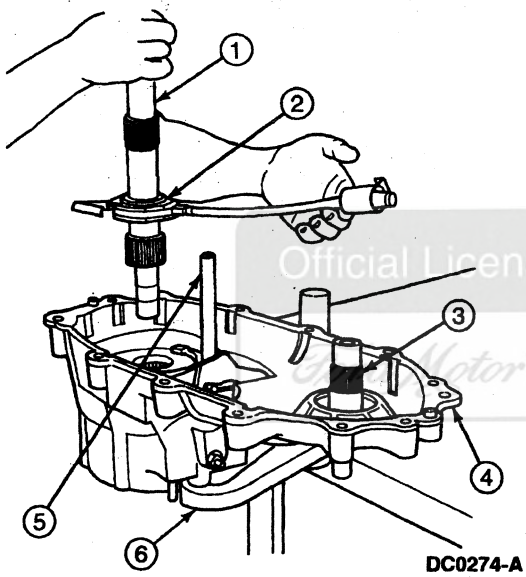

DC0274-A

Item	Part Number	Description
1	7061	Output Shaft, Rear
2	7A149	Oil Pump
3	7061	Output Shaft, Front
4	7005	Case Front
5	7240	Shift Rail
6	T57L-500-B	Bench Mounted Holding Fixture

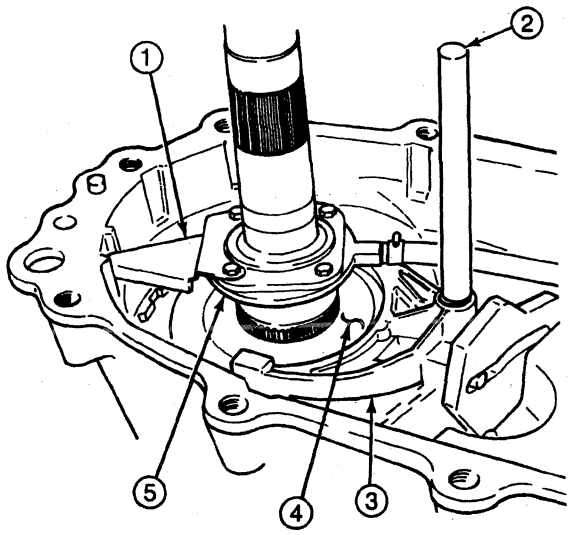

C10898-D

Item	Part Number	Description
1	7E215	Oil Pump Retainer
2	7240	Shift Rail
3	7289	High-Low Shift Fork
4	7100	Shift Collar Hub
5	7A149	Oil Pump

17. Assemble the following components:
    a. Assemble the drive sprocket into the chain.
    b. NOTE: The sprocket engagement spline will face the rear of the vehicle when properly installed.

       Assemble the driven sprocket into the chain so the word REAR is facing upward.
    c. Place the sprockets and chain as an assembly onto the rear and front output shafts.
    d. Install the thrust washer (7119) and snap ring that retains the lower sprocket to the front output shaft.
18. Assemble the 2W-4W lockup as follows:
    a. Position the small end of the tapered compression spring in the lockup collar.

Official Licensed Product Ford Motor Company

DISASSEMBLY AND ASSEMBLY (Continued)

b. NOTE: The snap ring holds the lockup together.

Place the lockup hub over the large end of the spring and compress the spring while installing the internal snap ring.

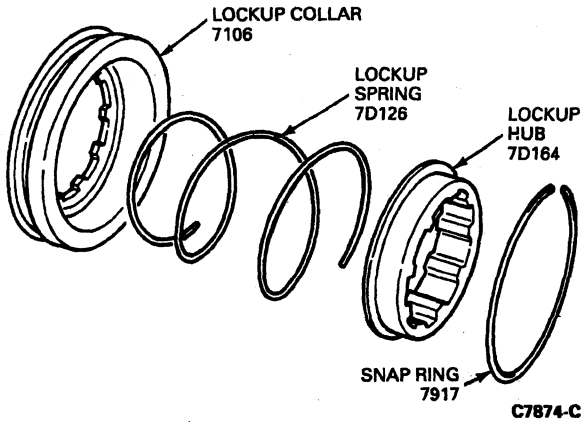

C7874-C

19. Install the lockup and its shift fork over the external splines of the drive sprocket and the shift rail with the cam follower feature of the fork facing the front of the transfer case.
20. Assemble the shift fork spring over the shift rail and against the shift fork.
21. Place the lockup hub over the external splines of the output shaft and secure with the appropriate snap ring. Make sure the snap ring is fully seated in the snap ring groove.

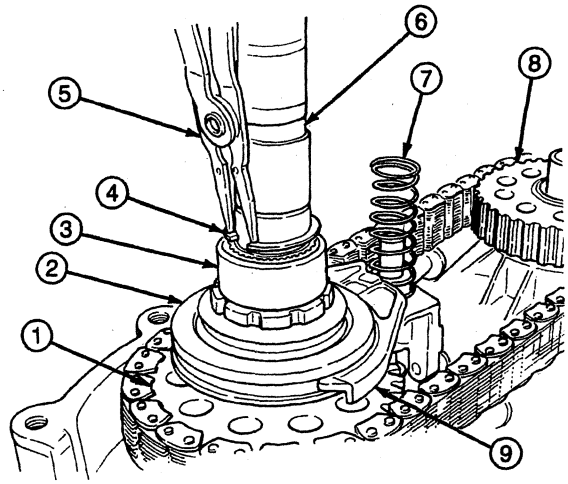

C7872-D

Item	Part Number	Description
1	7177	Drive Sprocket
2	7106	Lockup Collar
3	7100	Shift Collar Hub
4	7917	Snap Ring
5	—	Snap Ring Pliers
6	7061	Output Shaft, Rear
7	7219	Shift Fork Spring
8	7177	Driven Sprocket
9	7335	2W-4W Shift Fork

22. Press the front output needle bearing in its bore in the rear case, using an appropriate tool.
23. Press the rear output shaft bearing into position in the rear case, using an appropriate tool. Install bearing snap ring retainer in rear case.

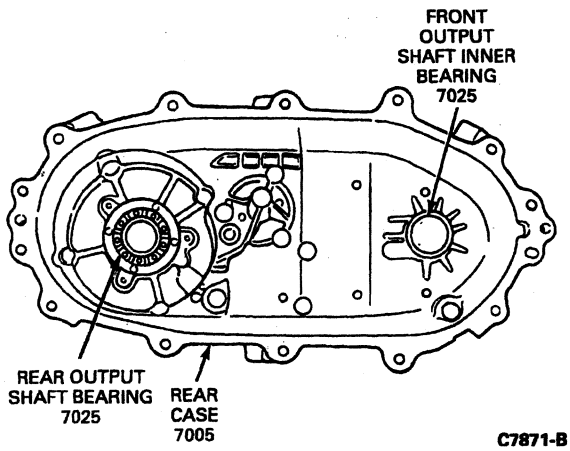

C7871-B

DISASSEMBLY AND ASSEMBLY (Continued)

24. **CAUTION: If too much silicone rubber is used when sealing the case halves, the excess sealant can plug the oil filter and cause case failure.**

    Coat the mating surface of the front case with a very small bead of Black Non-Acid Cure Silicone Rubber E7TZ-19562-A or equivalent meeting Ford specification ESL-M4G273-A.

25. Place the case halves together, making sure that the front output shaft, shift shaft and shift rail are aligned. Install and tighten the 12 No. 50 Torx® head bolts to 35-43 N·m (26-32 lb-ft).

26. Install the rear bearing snap ring on the output shaft, making sure that the snap ring is fully seated in the groove of the output shaft.

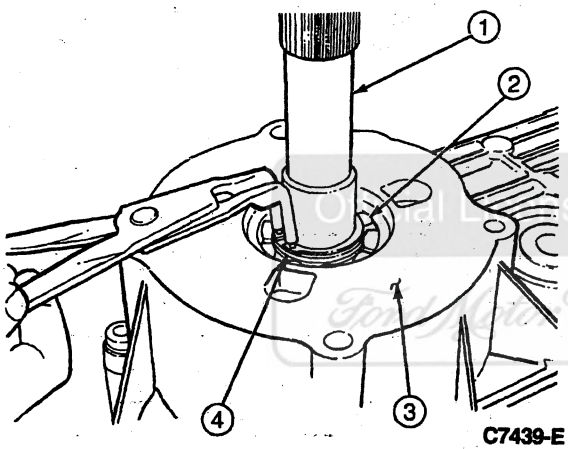

C7439-E

Item	Part Number	Description
1	7061	Output Shaft, Rear
2	7025	Rear Bearing
3	7005	Case
4	7917	Snap Ring

27. **CAUTION: If the bushing in the rear slip yoke extension housing is damaged, it must be replaced with the extension housing as an assembly. The bushing alone cannot be serviced.**

    Install a new yoke to flange seal, using Extension Housing Seal Replacer T61L-7657-B.

28. Apply a very small bead of Black Non-Acid Cure Silicone Rubber E7TZ-19562-A or equivalent meeting Ford specification ESL-M4G273-A to the face of the rear slip-yoke extension housing (7A039).

29. Position the rear slip-yoke extension housing onto the case and secure with the four Torx® bolts. Tighten bolts to 30-49 N·m (22-36 lb-ft).

30. Install the drain plug and tighten to 9-23 N·m (7-17 lb-ft).

31. Install the 4WD indicator switch with aluminum washer into the case. Tighten 4WD indicator switch to 34-47 N·m (25-35 lb-ft).

32. Install the transfer case. Refer to Transfer Case in the Removal and Installation portion of this section.

33. Fill transfer case. Refer to Fluid Level Check in the Adjustments portion of this section.

34. Start engine, check transfer case for correct operation. Stop engine and check fluid level. Fluid should drip out of level hole. If fluid flows out of level hole, the oil pump may not be functioning properly.

ADJUSTMENTS

Fluid Level Check

Transfer Case

Remove the fill plug from the rear transfer case (7A195). Fluid level should be just below the fill plug. If the fluid is below the level, fill with Motorcraft MERCON® ATF XT-2-QDX or MERCON® equivalent fluid to correct level. If vehicle is equipped with a PTO, refer to the following procedure for additional fluid fill requirements.

Vehicles Equipped with a PTO

CAUTION: If the proper fill procedures are not followed, transfer case or PTO failure can result. A fill plug labeled FOR PTO FILL ONLY can be found on the front of the transfer case.

NOTE: The 13-56 transfer case, when used with vehicles equipped with a PTO, requires 3.9 liters (4.1 quarts) more lubricant, bringing the total fill capacity to 5.8 liters (6.1 quarts). Motorcraft MERCON® ATF XT-2-QDX or MERCON® equivalent fluid is the required lubricant to be used in all transfer cases.

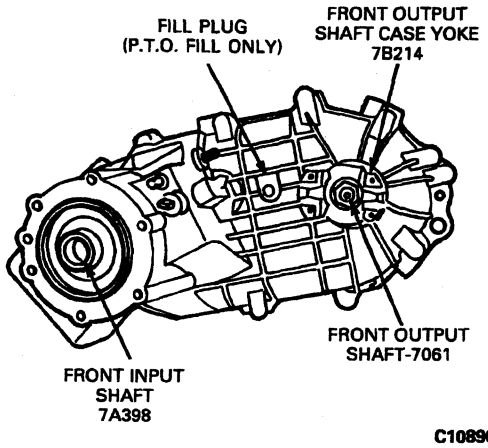

C10890-B

1. Remove the fill plug labeled FOR PTO FILL ONLY from the front of the transfer case.
2. Fill with specified lubricant to the bottom of the fill plug hole.

ADJUSTMENTS (Continued)

3. Install fill plug and tighten to 9-23 N·m (7-17 lb-ft).

SPECIFICATIONS

LUBRICANT/ADHESIVE/CLEANER SPECIFICATIONS

Description	Part Number	Ford Specification
Motorcraft MERCON® ATF	XT-2-QDX	MERCON®
Black Non-Acid Cure Silicone Rubber	E7TZ-19562-A	ESL-M4G273-A

TORQUE SPECIFICATIONS

Description	N·m	Lb-Ft	Lb-In
Case Half Retaining Bolts	35-43	26-32	—
4WD Indicator Switch	34-47	25-35	—
Front Output Case Yoke to Transfer Case	203-244	150-180	—
Drain Plug	9-23	7-17	—
Fill Plug	9-23	7-17	—
Transfer Case to Transmission Extension Housing	41-54	30-40	—
Oil Pump Retaining Bolts	4-4.5	—	35-40
Skid Plate to Frame	20-27	15-20	—
Control Lever Assembly to Transmission Extension Housing	96-122	71-90	—
Shift Lever Retaining Nut	27-38	20-28	—
Control Lever Assembly to Control Rod Pivot Bolt	92-125	68-92	—
Extension Housing	30-49	22-36	—

SPECIAL SERVICE TOOLS/EQUIPMENT

SPECIAL SERVICE TOOLS REQUIRED

Tool Number/ Description	Illustration
T50T-100-A Impact Slide Hammer	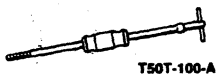 T50T-100-A
T57L-500-B Bench Mounted Holding Fixture	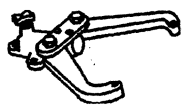 ST1186-A

(Continued)

SPECIAL SERVICE TOOLS REQUIRED (Cont'd)

Tool Number/ Description	Illustration
T61L-7657-B Extension Housing Seal Replacer	T61L-7657-B
T73T-1202-A Bearing Cup Replacer	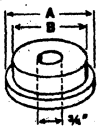 T73T-1202-A
T73T-1202-B Bearing Cup Replacer	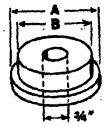 T73T-1202-B
T80T-4000-P Bearing Cup Replacer	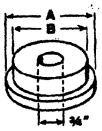 T80T-4000-P
T80T-4000-W Driver Handle	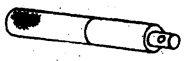 T80T-4000-W
T86T-7034-CH Output Shaft Seal Replacer	T86T-7034-CH

SPECIAL SERVICE TOOLS DESIRED

Tool Number	Description
D80L-100-A	Blind Hole Puller Set
D80L-100-T	Collet

ROTUNDA EQUIPMENT

Model	Description
014-00942	Hi-Lift Transmission Jack

SECTION 07-07C Transfer Case, Heavy-Duty, Manual Shift

SUBJECT	PAGE
VEHICLE APPLICATION	07-07C-1
DESCRIPTION AND OPERATION	
Mechanical Shift System	07-07C-1
DIAGNOSIS AND TESTING	
Transfer Case	07-07C-2
REMOVAL AND INSTALLATION	
Gearshift Lever	07-07C-4
Indicator Switch	07-07C-2
Oil Seal	07-07C-4
Input Shaft Yoke to Flange	07-07C-4
REMOVAL AND INSTALLATION (Cont'd.)	
Output Yoke	07-07C-4
Transfer Case	07-07C-2
DISASSEMBLY AND ASSEMBLY	
Transfer Case	07-07C-4
ADJUSTMENTS	
Fluid Level Check	07-07C-12
Transfer Case Without PTO	07-07C-12
SPECIFICATIONS	07-07C-12
SPECIAL SERVICE TOOLS/EQUIPMENT	07-07C-12

VEHICLE APPLICATION

F-250, F-350 Except 155-Inch Wheelbase SuperCab and 137-Inch Wheelbase Chassis Cab with E4OD Transmission, and F-Super Duty

Official Licensed Product
Ford Motor Company

DESCRIPTION AND OPERATION

Mechanical Shift System

The Borg-Warner 44-07 is a manual shift, part-time two-piece transfer case (7A195). The case is aluminum. The unit is lubricated by a positive-displacement oil pump that channels oil flow through drilled holes in the rear output shaft. The pump turns with the rear output shaft, and allows towing of the vehicle without disconnecting the rear driveshaft.

The input shaft, front output shaft, 4WD indicator switch, breather barb and shift lever are located on the front case half. The rear output shaft and drain and fill plugs are located on the rear case half.

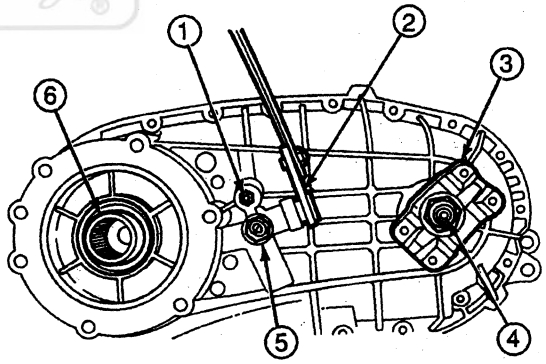

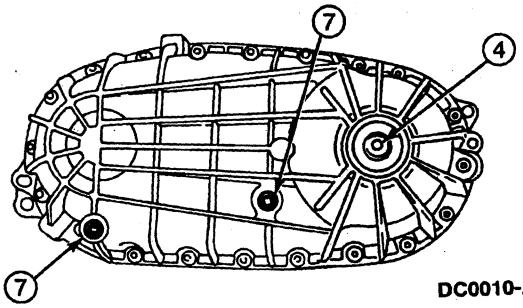

DC0010-A

Item	Part Number	Description
1	7034	Vent
2	7B106	Shift Lever

(Continued)

DESCRIPTION AND OPERATION (Continued)

Item	Part Number	Description
3	7B214	Case Yoke, Front
4	7061	Output Shaft
5	7E440	FWD Indicator Switch
6	7017	Input Shaft
7	87675-S	Fill/Drain Plug

DIAGNOSIS AND TESTING

Transfer Case

Refer to Section 07-07A.

REMOVAL AND INSTALLATION

Indicator Switch

Refer to Transfer Case in the Disassembly and Assembly portion of this section.

Transfer Case

Removal

CAUTION: A three way catalytic converter (TWC)(5E212) is located beside heat shield. Be careful when working around three way catalytic converters because of the extremely high temperatures generated by the three way catalytic converter.

1. Raise vehicle on a hoist and position suitable safety stands under vehicle.
2. Remove skid plate, if so equipped.
3. NOTE: Drain transfer case (7A195) only if disassembly is required.

   Place a drain pan under transfer case, remove drain plug and drain fluid from transfer case.
4. Disconnect 4WD indicator switch wire connector at transfer case.
5. Disconnect front driveshaft (4A376) from front case yoke (7B214). Remove rear driveshaft. Refer to Section 05-01.
6. **CAUTION: When removing the control rod from the gearshift lever (7210), do so very gently so as not to damage the gearshift lever.**

   Disconnect the control rod between the transfer case shift lever and the gearshift lever.
7. Support transfer case with Rotunda Hi-Lift Transmission Jack 014-00942 or equivalent.
8. Remove the bolts retaining transfer case to extension housing (7A039).
9. Slide transfer case rearward off of the transmission output shaft, and lower transfer case from vehicle. Remove extension housing gasket (7086) between transfer case and extension housing.

Installation

1. Clean transmission and extension housing gasket mating surfaces. Install a new extension housing gasket.
2. Raise the transfer case with the transmission jack so that the transmission output shaft aligns with the splined transfer case input shaft. Slide the transfer case forward onto the transmission output shaft and onto the dowel pin. Install the six transfer case retaining bolts to the extension housing. Tighten the bolts to 41-54 N·m (30-40 lb-ft) in the sequence shown.

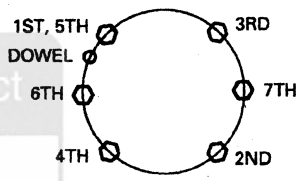

C7434-B

3. Remove transmission jack from transfer case.
4. Install rear driveshaft. Refer to Section 05-01.
5. Attach the control rod between the transfer case shift lever and the gearshift lever.
6. Connect 4WD indicator switch wire connector at transfer case.
7. Connect front driveshaft to front output case yoke. Refer to Section 05-01.
8. Install skid plate to frame (5005), if so equipped. Tighten nuts and bolts to 20-27 N·m (15-20 lb-ft).
9. If removed, install drain plug and tighten to 9-23 N·m (7-17 lb-ft).
10. As required, check or refill fluid with Motorcraft MERCON® ATF XT-2-QDX or MERCON® equivalent. Refer to Fluid Level Check in the Adjustments portion of this section.
11. Remove safety stands and lower vehicle.

Official Licensed Product

REMOVAL AND INSTALLATION (Continued)

Borg-Warner 44-07 Transfer Case

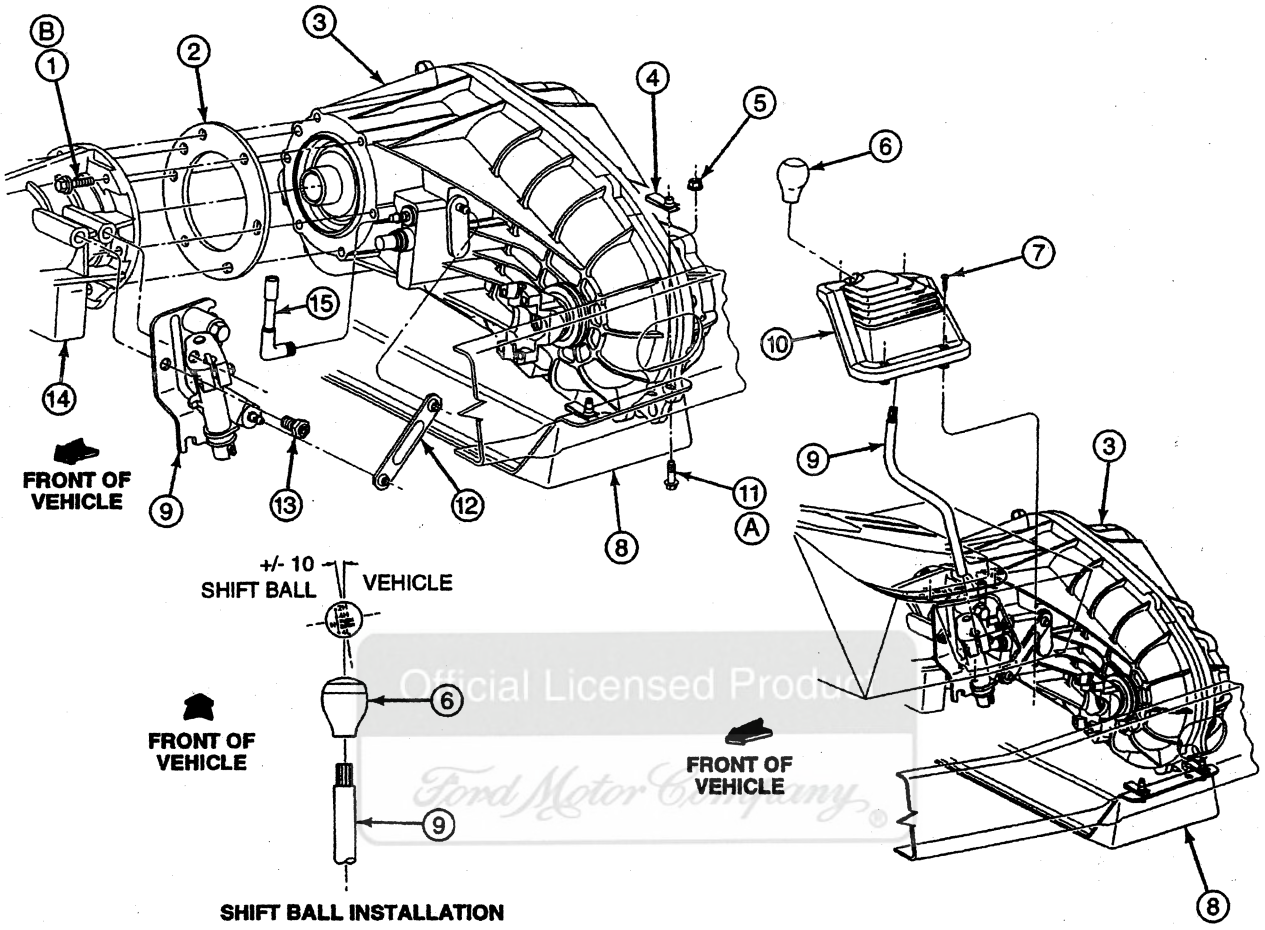

DC0011-A

Item	Part Number	Description
1	N605804-S100	Bolt
2	7086	Extension Housing Gasket
3	7A195	Transfer Case
4	N804340-S2	Nut
5	N620481-S2	Nut (Alternate)
6	7213	Gearshift Lever Knob
7	55930	Screw
8	7E063	Skid Plate
9	7210	Gearshift Lever

(Continued)

Item	Part Number	Description
10	7277	Gearshift Lever Boot
11	N605906-S2	Bolt
12	7A315	Control Rod
13	391219-S2	Bolt
14	7003	Transmission
15	7A246	Transmission Breather Tube
A	—	Tighten to 20-27 N·m (15-20 Lb-Ft)
B	—	Tighten to 41-54 N·m (30-40 Lb-Ft)

REMOVAL AND INSTALLATION (Continued)

Gearshift Lever

NOTE: Remove the gearshift lever knob (7213) only if the gearshift lever knob, gearshift lever boot (7277) or gearshift lever (7210) is being replaced.

Removal

1. Shift transfer case (7A195) into 2H.
2. Raise vehicle on hoist and position suitable safety stands under vehicle.
3. Loosen (do not remove) the nut retaining the shift handle to the gearshift lever. Remove the shift handle from the gearshift lever.
4. Remove the vent hose from the notch in the detent plate.
5. **CAUTION: When removing the control rod from the gearshift lever, do so very gently so as not to damage the gearshift lever.**

   Remove the control rod from the gearshift lever.
6. Loosen (do not remove) the large pivot bolt holding the gearshift lever to the detent plate.
7. Swing the gearshift lever out of the way and remove the two bolts retaining the detent plate to the extension housing (7A039). Remove the entire gearshift lever from the vehicle.

Installation

1. NOTE: Prior to installation, the gearshift lever knob must be at room temperature and can be warmed to 60°C-82°C (140°F-180°F) as an assembly aid.

   NOTE: Prior to installing the gearshift lever, make sure the transfer case link is in the 2H position (pointing upward).

   Install the gearshift lever to the extension housing and tighten the two bolts to 96-122 N·m (71-90 lb-ft).
2. Attach the control rod to the gearshift lever.
3. Tighten the large pivot bolt to 92-125 N·m (68-92 lb-ft).
4. Attach the vent hose into the notch in the detent plate so the white mark is flush to the outside surface of the plate.
5. Install the shift handle into the gearshift lever. Tighten the retaining nut to 27-38 N·m (20-28 lb-ft).
6. NOTE: Shift pattern must be parallel within ±10 degrees of vehicle centerline.

   Check transfer case for proper shifting and operation.
7. Remove safety stands and lower vehicle.

Oil Seal

Input Shaft Yoke to Flange

Refer to Transfer Case in the Disassembly and Assembly portion of this section.

Output Yoke

SPECIAL SERVICE TOOL(S) REQUIRED

Description	Tool Number
Impact Slide Hammer	T50T-100-A
Output Shaft Seal Replacer	T86T-7034-CH

Removal

1. Raise the vehicle on a hoist and position suitable safety stands under vehicle.
2. Disconnect the front driveshaft (4A376) from the transfer case. Wire the driveshaft out of the way. Refer to Section 05-01.
3. Remove the 32 mm shaft nut (7045), output shaft yoke washer (7B368), oil seal (7052) and the case yoke (7B214).
4. Remove the yoke to flange seal (7B215) from the rear output housing bore with suitable seal remover and Impact Slide Hammer T50T-100-A.

Installation

1. **CAUTION: Prior to installation, make sure the output housing bore and face are free of nicks and burrs.**

   Position the yoke to flange seal into the output housing bore, making sure that the seal is not cocked in the bore. Drive the yoke to flange seal into the bore with Output Shaft Seal Replacer T86T-7034-CH.
2. Install the case yoke, oil seal, output shaft yoke washer and shaft nut. Tighten the nut to 203-244 N·m (150-180 lb-ft).
3. Connect the driveshaft to the transfer case output shaft case yoke. Refer to Section 05-01.
4. Check fluid level. Refer to Fluid Level Check in the Adjustments portion of this section. Adjust as required.
5. Remove safety stands and lower the vehicle from the hoist.

DISASSEMBLY AND ASSEMBLY

Transfer Case

SPECIAL SERVICE TOOL(S) REQUIRED

Description	Tool Number
Bench Mounted Holding Fixture	T57L-500-B
Driver Handle	T80T-4000-W

Disassembly

1. Remove transfer case (7A195) from vehicle. Refer to Transfer Case in the Removal and Installation portion of this section.

DISASSEMBLY AND ASSEMBLY (Continued)

Transfer Case, Manual Shift, 44-07

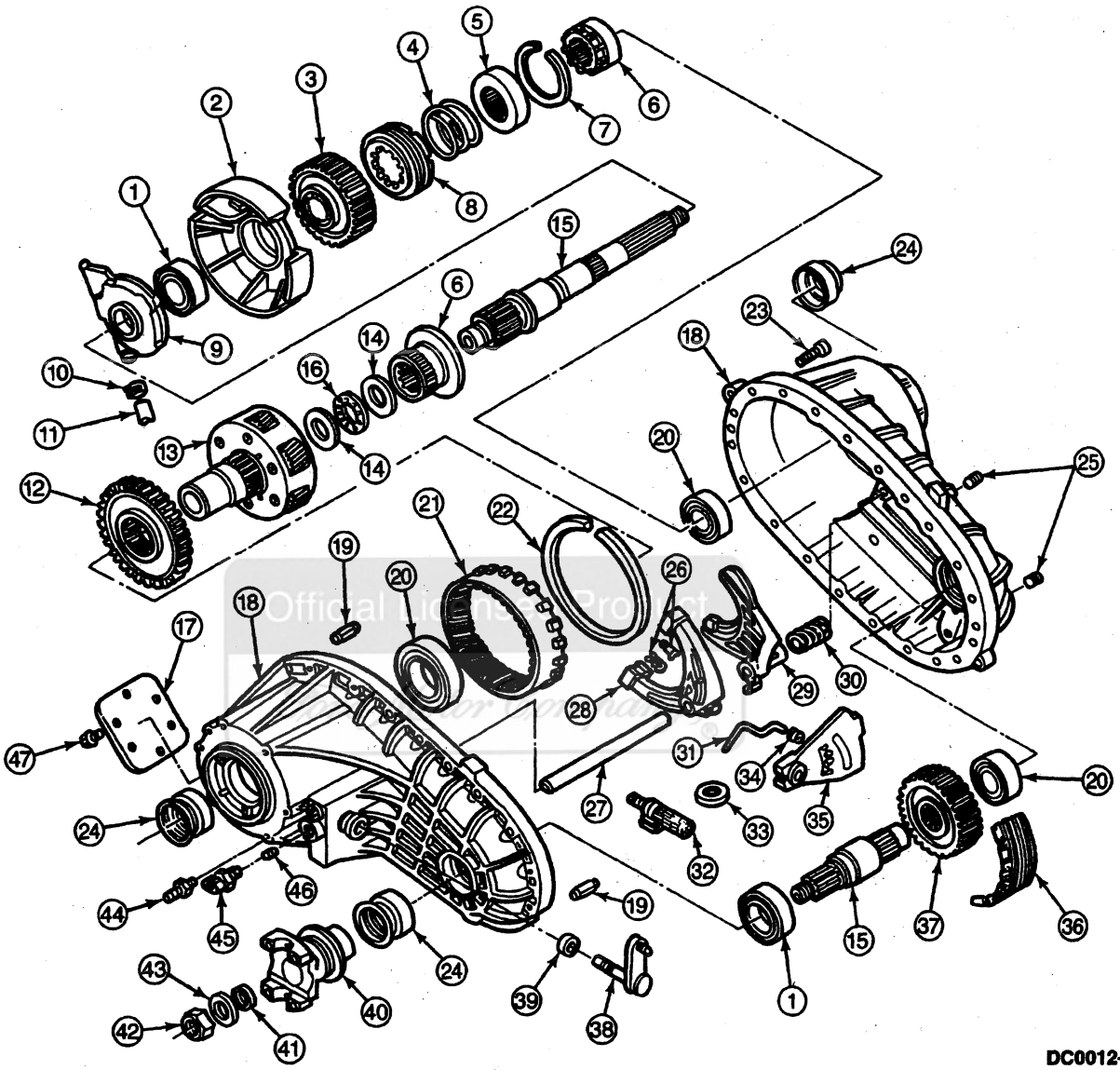

DC0012-A

Item	Part Number	Description
1	7N430	Bearing
2	7085	Bearing Retainer
3	7177	Drive Sprocket
4	7D126	Lockup Spring
5	7D164	Lockup Hub
6	7100	Shift Collar Hub
7	7917	Snap Ring
8	7106	Lockup Collar
9	7A149	Oil Pump
10	382486-S	Clamp, Hose
11	7A210	Coupling Hose

(Continued)

Item	Part Number	Description
12	—	Gear (with PTO Only)
13	7A398	Front Planet
14	7Z111	Thrust Washer
15	7061	Output Shaft
16	7D221	Thrust Bearing
17	7165	Transfer Case Cover (with PTO Only)
18	7005	Case
19	—	Pin Dowel (Part of 7005)
20	7025	Bearing
21	7A153	Ring Gear
22	7064	Snap Ring

(Continued)

DISASSEMBLY AND ASSEMBLY (Continued)

Item	Part Number	Description
23	7A443	Bolt
24	7B215	Yoke to Flange Seal
25	7A010	Case Plug
26	7C430	Shift Fork Facing
27	7240	Shift Rail
28	—	Fork, Reduction (Part of 7289)
29	7289	Fork, Shift, 2WD-4WD
30	7219	Shift Fork Spring
31	7C349	Spring, Detent
32	7A098	Pickup Tube
33	7L027	Oil Pan Magnet
34	7C191	Bushing, Detent

(Continued)

Item	Part Number	Description
35	7F063	Shift Cam
36	7A029	Drive Chain
37	7177	Driven Sprocket
38	7B106	Shaft and Pin Lever
39	7288	Shifter Shaft Seal
40	7B214	Case Yoke
41	7052	Oil Seal
42	7045	Shaft Nut
43	7B368	Output Shaft Yoke Washer
44	7034	Vent
45	7E440	4WD Indicator Switch
46	—	Setscrew (Part of 7E440)
47	381673-S	Bolt (with PTO Only)

2. Remove the output shaft nut (7045), output shaft yoke washer (7B368), oil seal (7052) and the output case yoke (7B214).

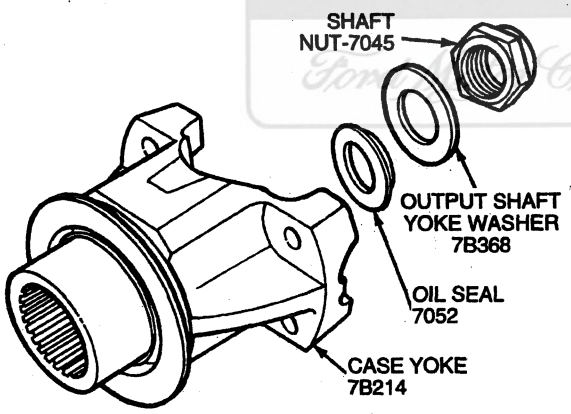

FRONT OUTPUT SHAFT YOKE **C7853-E**

3. Remove the 4WD indicator switch.

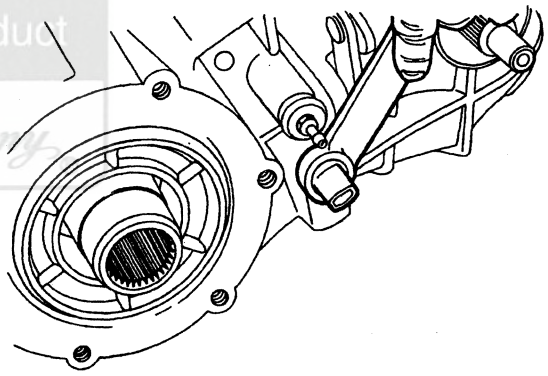

C12769-A

4. NOTE: Discard yoke to flange seal (7B215) after it is removed.

   Remove the yoke to flange seal from the rear case with a screwdriver.

Official Licensed Product Ford Motor Company

DISASSEMBLY AND ASSEMBLY (Continued)

5. **CAUTION: When removing RTV sealant, use care not to damage the mating surfaces of the cases (7005).**
   Remove the 20 No. 40 Torx® head bolts (7A443) that retain the front case to the rear case. Insert a 1/2-inch drive breaker bar between the pry bosses and separate the case halves. Pull the rear case from the front case.

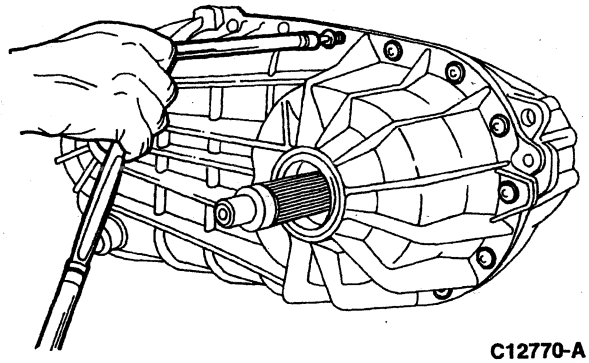

C12770-A

6. Remove front output shaft bearing from the rear case, using suitable bearing remover tool.
7. Slide the shift collar hub off of the output shaft.
8. Remove the shift fork spring from the shift rail and lift the mode (2WD/4WD) shift fork with the lockup collar from the rear output shaft.

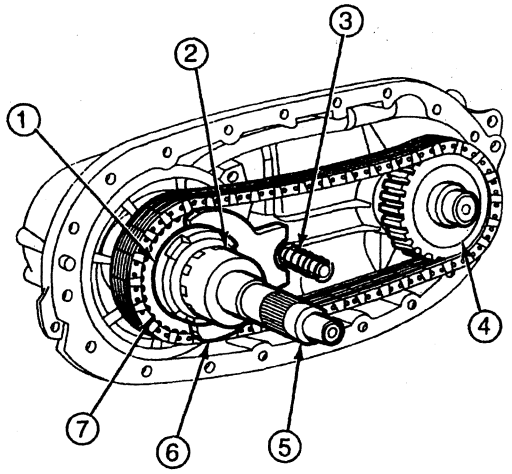

C12934-A

Item	Part Number	Description
1	7106	2W-4W Lockup
2	7100	Shift Collar Hub

(Continued)

Item	Part Number	Description
3	7219	Shift Fork Spring
4	7177	Driven Sprocket
5	7061	Output Shaft, Rear
6	7335	Mode Shift Fork
7	7177	Drive Sprocket

9. Disassemble the 2W-4W lockup assembly by removing the internal snap ring and pulling the lockup hub and spring from the lockup collar.

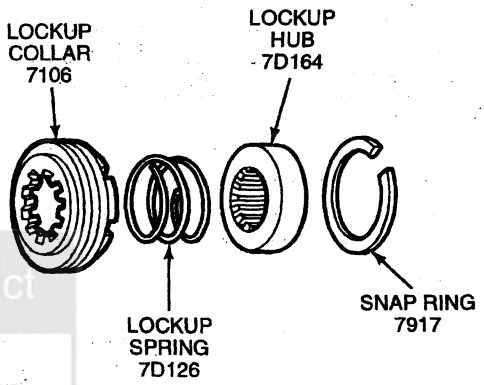

C12773-A

10. Grasp the drive and driven sprockets with the chain and lift them at the same time from the drive and driven output shafts.

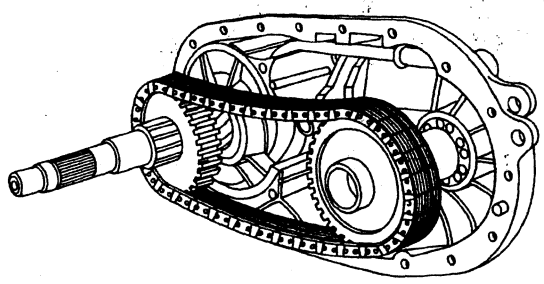

C12774-A

11. Remove the front output shaft.
12. Remove the shift rail by sliding it straight out from the shift fork.
13. Remove the bearing support and bearing assembly.

Ford Licensed Product Motor Company

DISASSEMBLY AND ASSEMBLY (Continued)

14. Drive the bearing from the center, using a brass drift and a light mallet to avoid damaging the bearing support.

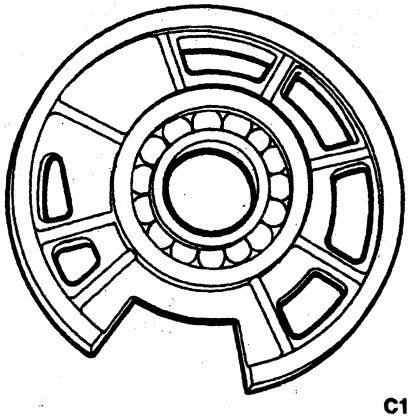

C12775-A

15. **CAUTION: Do not attempt to disassemble or service the gerotor pump assembly. The pump must rotate freely on the shaft. If the pump binds on the shaft, it must be replaced.**

    Lift out the pump screen and remove the output shaft with the pump assembled on it.

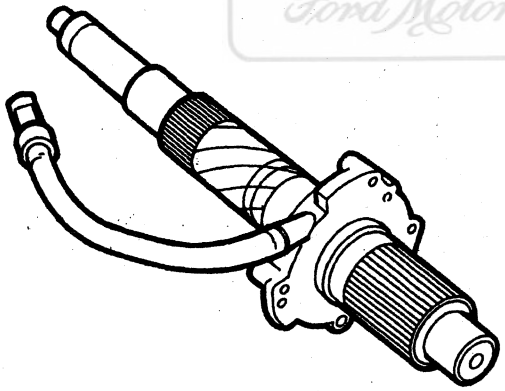

C12926-A

16. Remove the two oil pan magnets (7L027) from their slots in the case.
17. Remove the high-low shift fork by first rotating it until the roller is free from the cam, then sliding out of engagement from the shift collar hub.
18. Remove the shift collar hub.
19. Remove the thrust washers and thrust bearing from the front planet (7A398).
20. NOTE: The front planet is serviced as an assembly only. The inside diameter of the bushing is 1.25 inches and the outside diameter is 1.5 inches.

    Remove the front planet. Remove the PTO gear, if so equipped.

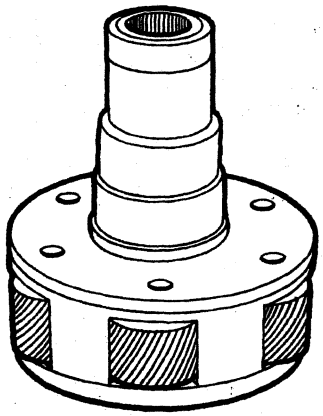

C12927-A

21. Remove the ring gear (7A153) by prying out the internal snap ring with a screwdriver and lifting out the gear.

Official Licensed Product
Ford Motor Company

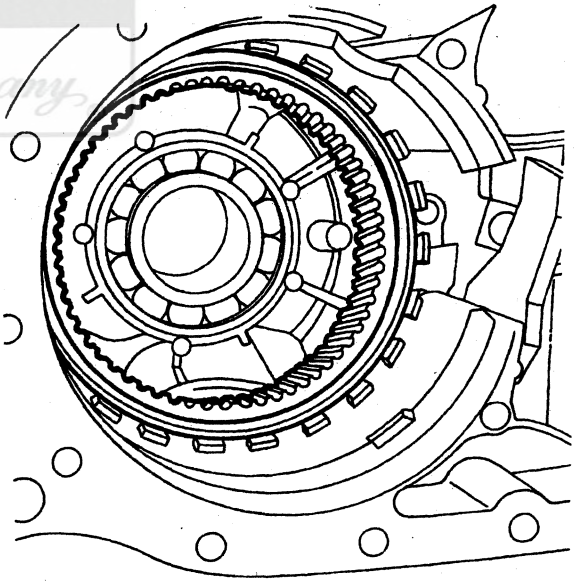

C12928-A

22. NOTE: Discard yoke to flange seals after they are removed.

    Remove input shaft and front output shaft yoke to flange seals with a screwdriver.

DISASSEMBLY AND ASSEMBLY (Continued)

23. **CAUTION: Use care not to damage the case.**
    Drive out the input shaft bearing and the front and rear output shaft bearings from the inside of the case, using a brass drift and tapping them lightly with a small mallet.

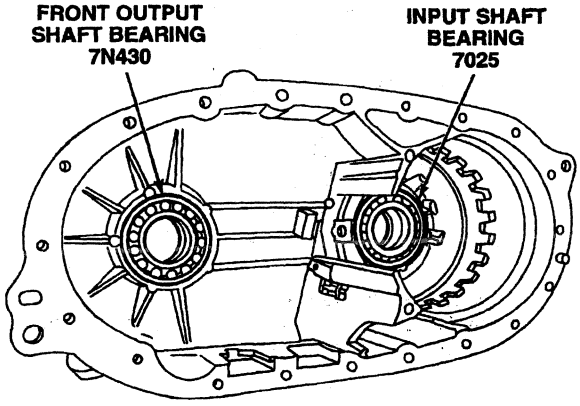

DC0013-A

24. Place the shift lever in the NEUTRAL position so the shift cam setscrew can be seen through the hole for the 4WD indicator switch.
25. Remove the setscrew, using a hex key tool.
26. Remove the shift lever by sliding it out of the case.
27. Remove the shift cam, detent spring and bushing.
28. **CAUTION: Use care not to damage the case.**
    Remove the shifter shaft seal (7288) by carefully prying it out of the case.

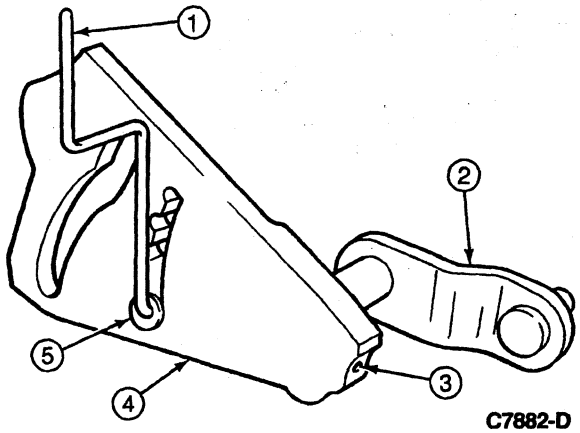

C7882-D

Item	Part Number	Description
1	7C349	Shaft Cam Detent Spring
2	7B106	Shift Lever
3	—	Setscrew Hole (Part of 7F063)
4	7F063	Shift Cam
5	7C191	Bushing

(Continued)

Assembly

NOTE: Before assembly, lubricate all parts with Motorcraft MERCON® ATF XT- 2-QDX or MERCON® equivalent. Remove all chips from the bolt holes in the case and rear case. Remove all traces of RTV gasket sealant from the mating surfaces of the front case and the rear case.

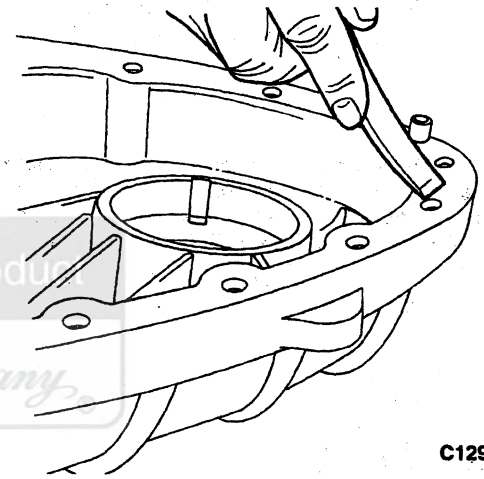

C12930-A

1. Install the input shaft bearing (7025) and the front output shaft bearing in the case, using a suitable tool.
2. Drive the input and front output yoke to flange seals into the case until they are fully seated against the case, using suitable shaft seal installing tool.

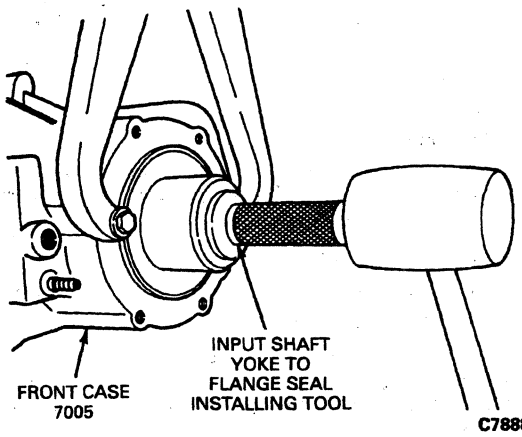

C7888-B

Ford Motor Company Licensed Product

DISASSEMBLY AND ASSEMBLY (Continued)

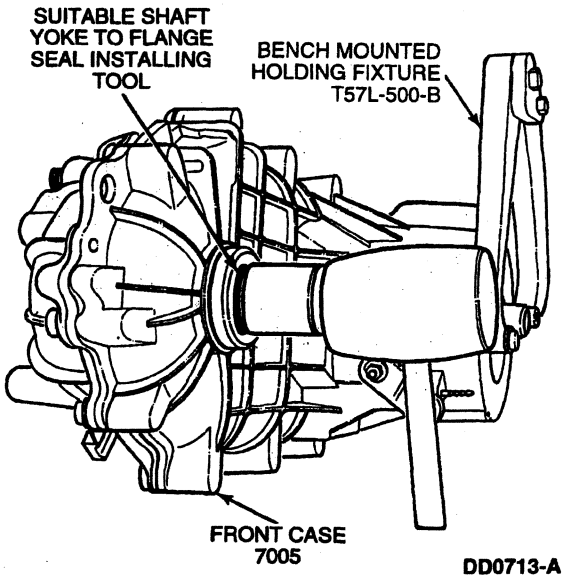

3. NOTE: The front output shaft is held in place in the case by the front output yoke to flange seal and oil seal slinger.

   Install the front output shaft through the lower bearing. Install the front case yoke onto the front output shaft, then the oil seal, output shaft yoke washer and 32 mm shaft nut. Tighten the yoke lock nut to 203-244 N·m (150-180 lb-ft).
4. Install the ring gear into the slots in the case. Install the large internal snap ring, making sure that it is fully seated.
5. **CAUTION: Carefully guide the input shaft (7017) through the yoke to flange seal, so as not to roll the lip of the yoke to flange seal inside out.**

   CAUTION: Use care not to damage the gear teeth when aligning them with the ring gear teeth.

   Install the front planet in the case through the input shaft bearing.
6. Install a new shifter shaft seal into the case, using an appropriate tool.
7. Position the detent spring, bushing and shift cam in the recess in the case.
8. Slide the shift shaft and lever through the case and seal and into engagement with the shift cam. Install the setscrew through the holes in the case for the 4WD indicator switch. Tighten to 8-12 N·m (71-108 lb-in).
9. Install thrust bearing and thrust washers in front planet.

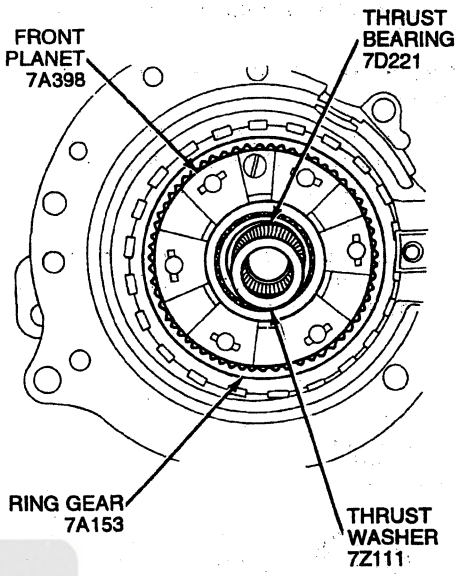

10. Install the shift collar hub. Install the high-low shift fork by engaging it with the shift hub flange and rotating it until the roller is engaged with the lower groove of the cam.
11. Install the shift rail through the high-low fork bore and into the rail bore in the case.
12. **CAUTION: Make sure the external splines of the output shaft engage the internal splines of the shift collar hub. Make sure the oil filter leg is in the notch of the front case.**

    Install the output shaft and oil pump in the input shaft. Install the oil pan magnets in the slots in the front case.
13. Install center support bearing in bearing support, using a suitable bearing replacer and Driver Handle T80T-4000-W.
14. **CAUTION: Make sure the bearing support properly engages with the case and the pump anti-rotation tab is properly engaged with the bearing support.**

    Install bearing support with bearing in the front case.
15. Components should be assembled in the following sequence:
    a. Assemble the drive and driven sprockets in the drive chain outside the transfer case. The external splined boss on the drive sprocket and the plain extended boss on the driven sprocket should face upward.

Official Licensed Product

DISASSEMBLY AND ASSEMBLY (Continued)

b. NOTE: The bosses on the sprockets should face the rear of the transfer case.

Place the sprockets and drive chain as an assembly onto the front and rear output shafts.

16. Assemble the 2W-4W lockup assembly as follows:
    a. Position the large end of the tapered compression lockup spring in the lockup hub.
    b. NOTE: The snap ring holds the lockup together.

    Place the lockup hub over the small end of the spring and compress the spring while installing the internal snap ring.

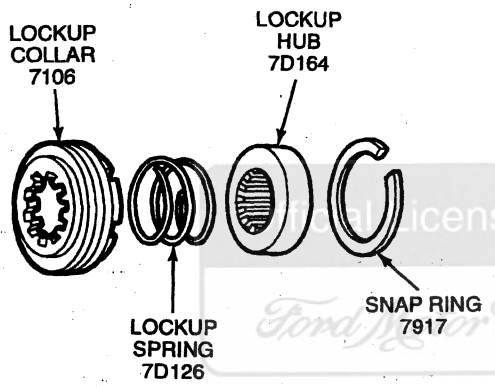

C12773-A

17. Install the lockup and its shift fork over the external splines of the drive sprocket and the shift rail so that the cam follower feature of the shift fork is against the shift cam.
18. Assemble the shift fork spring over the shift rail and against the shift fork.
19. Place the lockup hub over the external splines of the output shaft.

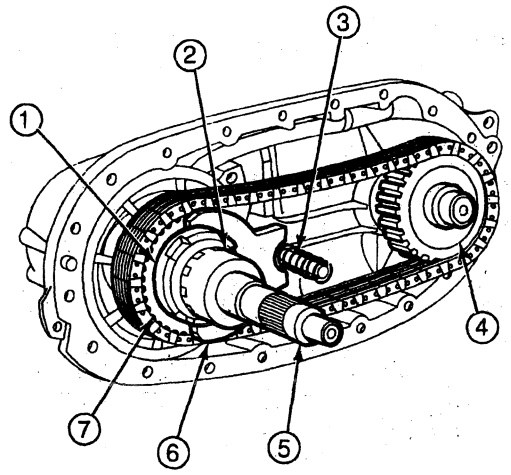

C12934-A

Item	Part Number	Description
1	7106	2W-4W Lockup
2	7100	Shift Collar Hub
3	7219	Shift Fork Spring
4	7177	Driven Sprocket
5	7061	Output Shaft, Rear
6	7335	Mode Shift Fork
7	7177	Drive Sprocket

20. Press the front output shaft bearing in its bore in the rear case, using an appropriate tool.
21. Press the rear output shaft bearing into position in the case, using an appropriate tool.
22. Install the yoke to flange seal in the rear case, using the appropriate tool and making sure that it is fully seated.
23. **CAUTION: If too much silicone rubber is used when sealing the case halves, the excess sealant can plug the oil filter and cause case failure.**

    Coat the mating surface of the front case with a very small bead of Black Non-Acid Cure Silicone Rubber E7TZ-19562-A or equivalent meeting Ford specification ESL-M4G273-A.

Ford Motor Company

DISASSEMBLY AND ASSEMBLY (Continued)

24. Place the case halves together, making sure that the front output shaft, shift shaft and shift rail are aligned. Install and tighten the 20 No. 40 Torx® head bolts to 30-49 N·m (22-36 lb-ft).

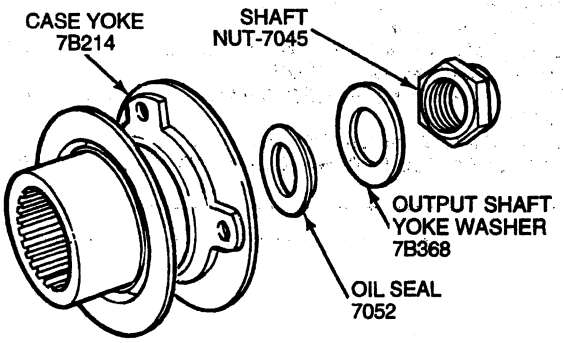

REAR OUTPUT SHAFT FLANGE C10801-D

25. Install the drain plug and tighten to 9-23 N·m (7-17 lb-ft).
26. Install the 4WD indicator switch with aluminum washer into the case. Tighten 4WD indicator switch to 34-47 N·m (25-35 lb-ft).
27. Install the transfer case. Refer to Transfer Case in the Removal and Installation portion of this section.
28. Fill transfer case. Refer to Fluid Level Check in the Adjustments portion of this section.
29. Start engine, check transfer case for correct operation. Stop engine and check fluid level. Fluid should drip out of level hole. If fluid flows out of level hole, the oil pump may not be functioning properly.

ADJUSTMENTS

Fluid Level Check

Transfer Case Without PTO

Remove the fill plug from the rear transfer case (7A195). Fluid level should be just below the fill plug. If the fluid is below the level, fill with Motorcraft MERCON® ATF XT-2-QDX or MERCON® equivalent fluid to correct level. Tighten fill plug to 9-23 N·m (7-17 lb-ft).

SPECIFICATIONS

LUBRICANT/ADHESIVE/CLEANER SPECIFICATIONS

Description	Part Number	Ford Specification
Motorcraft MERCON® ATF	XT-2-QDX	—
Black Non-Acid Cure Silicone Rubber	E7TZ-19562-A	ESL-M4G273-A

TORQUE SPECIFICATIONS

Description	N·m	Lb-Ft	Lb-In
Case Half Retaining Bolts	30-49	22-36	—
4WD Indicator Switch	34-47	25-35	—
Output Case Yoke to Transfer Case	203-244	150-180	—
Drain Plug	9-23	7-17	—
Fill Plug	9-23	7-17	—
Transfer Case to Transmission Extension Housing	41-54	30-40	—
Skid Plate to Frame	20-27	15-20	—
Shift Cam Shaft Setscrew	8-12	—	71-108
Control Lever Assembly to Transmission Extension Housing	96-122	71-90	—
Shift Lever Retaining Nut	27-38	20-28	—
Control Lever Assembly to Control Rod Pivot Bolt	92-125	68-92	—

SPECIAL SERVICE TOOLS/EQUIPMENT

SPECIAL SERVICE TOOLS REQUIRED

Tool Number/ Description	Illustration
T50T-100-A Impact Slide Hammer	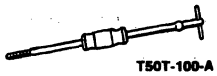 T50T-100-A
T57L-500-B Bench Mounted Holding Fixture	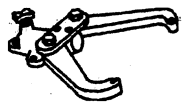 ST1186-A
T80T-4000-W Driver Handle	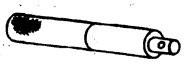 T80T-4000-W
T86T-7034-CH Output Shaft Seal Replacer	T86T-7034-CH

ROTUNDA EQUIPMENT

Model	Description
014-00942	Hi-Lift Transmission Jack

SECTION 07-14 Clutch Pedal Position (CPP) Switch

SUBJECT	PAGE
VEHICLE APPLICATION	07-14-1
DESCRIPTION AND OPERATION	
Clutch Pedal Position (CPP) Switch	07-14-1
DIAGNOSIS AND TESTING	
Clutch Pedal Position Switch	07-14-1
Component Test	07-14-2
Clutch Pedal Position (CPP) Switch	07-14-2
Inspection and Verification	07-14-1
DIAGNOSIS AND TESTING (Cont'd.)	
Symptom Chart	07-14-2
Electrical Schematic Reference(s)	07-14-1
REMOVAL AND INSTALLATION	
Clutch Pedal Position (CPP) Switch	07-14-2
ADJUSTMENTS	
Clutch Pedal Position (CPP) Switch	07-14-3
SPECIAL SERVICE TOOLS/EQUIPMENT	07-14-3

VEHICLE APPLICATION

F-250 Heavy Duty, F-350 and F-Super Duty

DESCRIPTION AND OPERATION

Clutch Pedal Position (CPP) Switch

The clutch pedal position switch (CPP)(11A152) is attached to the clutch master cylinder push rod near the clutch pedal (7519). Pressing the clutch pedal manually closes the clutch pedal position switch and allows engine cranking. The clutch pedal position switch will also deactivate the speed control system when the clutch pedal is pressed.

Licensed Product Ford Motor Company

DIAGNOSIS AND TESTING

Electrical Schematic Reference(s)

Refer to Electrical and Vacuum Troubleshooting Manual, Cell 20, Starting System for schematic and connector information.

Clutch Pedal Position Switch

Inspection and Verification

1. Visually inspect the system components for the customer's concern.

VISUAL INSPECTION CHART

Mechanical	Electrical
• Restricted clutch pedal travel	• Damaged clutch pedal position switch • Damage to wiring harness • Loose or corroded connections

2. Check the wiring harness for obvious signs of shorts, opens, bad connections or damage.
3. If fault is not visually evident, determine the symptom and proceed to the following symptom chart.

DIAGNOSIS AND TESTING (Continued)

Symptom Chart

STARTER CLUTCH PEDAL POSITION SWITCH

Condition	Possible Source	Action
• Engine Will Not Crank	• CPP switch.	• REFER to Component Test in the Diagnosis and Testing portion of this Section.
• Engine Cranks Without Actuating the Clutch Pedal	• CPP switch.	• REFER to Component Test in the Diagnosis and Testing portion of this Section.

Component Test

Clutch Pedal Position (CPP) Switch

1. Disconnect harness connector at CPP switch.
2. Refer to the appropriate chart for either gasoline or diesel engine. As directed, connect a Rotunda 73 Digital Multimeter or equivalent to the specified CPP switch pins, position the clutch pedal as specified and record the resistance reading.

CPP SWITCH TEST (GASOLINE)

Connect Ohmmeter Between Pins	Clutch Pedal	Resistance
1 and 2	Released	Less than 5 ohms
1 and 2	Actuated	Greater than 10k ohms
1 and any other pin	Released / Actuated	Greater than 10k ohms
2 and any other pin except 1	Released / Actuated	Greater than 10k ohms
3 and 4	Released	Greater than 10k ohms
3 and 4	Actuated	Less than 5 ohms
3 and any other pin	Released / Actuated	Greater than 10k ohms
4 and any other pin except 3	Released / Actuated	Greater than 10k ohms
5 and 6	Released	Greater than 10k ohms
5 and 6	Actuated	Less than 5 ohms
5 and any other pin	Released / Actuated	Greater than 10k ohms
6 and any other pin except 5	Released / Actuated	Greater than 10k ohms

CPP SWITCH TEST (DIESEL)

Connect Ohmmeter Between Pins	Clutch Pedal	Resistance
3 and 4	Released	Less than 5 ohms
3 and 4	Actuated	Greater than 10k ohms

(Continued)

CPP SWITCH TEST (DIESEL) (Cont'd)

Connect Ohmmeter Between Pins	Clutch Pedal	Resistance
3 and any other pin	Released / Actuated	Greater than 10k ohms
4 and any other pin except 3	Released / Actuated	Greater than 10k ohms
5 and 6	Released	Greater than 10k ohms
5 and 6	Actuated	Less than 5 ohms
5 and any other pin	Released / Actuated	Greater than 10k ohms
6 and any other pin except 5	Released / Actuated	Greater than 10k ohms

3. If resistance values are not as specified, replace CPP switch. Refer to Clutch Pedal Position (CPP) Switch in the Removal and Installation portion of this section.
4. If resistance values are as specified, CPP switch is OK. Refer to Section 03-06 for starting system diagnosis and to Section 11-05 for ignition switch diagnosis.

REMOVAL AND INSTALLATION

Clutch Pedal Position (CPP) Switch

Removal

1. Disconnect the wiring harness from clutch pedal position switch (CPP)(11A152).
2. Pull down on orientation clip to separate from switch tab.
3. Rotate clutch pedal position switch one-half turn to expose plastic retainer.
4. Push switch tabs together and slide retainer rearward and separate from clutch pedal position switch.
5. Remove clutch pedal position switch from clutch master cylinder (7A543) push rod.

REMOVAL AND INSTALLATION (Continued)

Installation

1. Follow the removal procedure in reverse order.

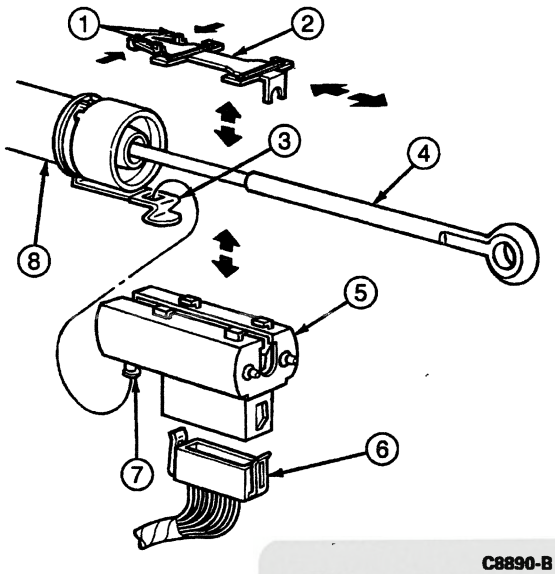

C8890-B

Item	Part Number	Description
1	—	Switch Tab (Part of 11A152 Clutch Pedal Position Switch)
2	—	Plastic Retainer (Part of 11A152 Clutch Pedal Position Switch)
3	—	Orientation Clip (Part of 7A543 Clutch Master Cylinder)
4	—	Push Rod (Part of 7A543 Clutch Master Cylinder)
5	11A152	Clutch Pedal Position Switch
6	—	Wiring Harness (Part of 14401 Main Wiring)
7	—	Pin (Part of 11A152 Clutch Pedal Position Switch)
8	7A543	Clutch Master Cylinder

(Continued)

ADJUSTMENTS

Clutch Pedal Position (CPP) Switch

The clutch pedal position switch (CPP)(11A152) is not adjustable. If the clutch pedal position switch does not function properly, replace the clutch pedal position switch. Refer to Clutch Pedal Position (CPP) Switch in the Removal and Installation portion of this section.

SPECIAL SERVICE TOOLS/EQUIPMENT

ROTUNDA EQUIPMENT

Model	Description
105-R0051	73 Digital Multimeter

Official Licensed Product

GROUP

CLUTCH 08

SECTION TITLE	PAGE
CLUTCH CONTROLS	08-02-1
CLUTCH/PRESSURE PLATE	08-01-1
CLUTCH SYSTEM, SERVICE	08-00-1

SECTION 08-00 Clutch System, Service

SUBJECT	PAGE
VEHICLE APPLICATION	08-00-1
DESCRIPTION AND OPERATION	
Clutch System	08-00-1
DIAGNOSIS AND TESTING	
Component Tests	08-00-3
Clutch Pedal Position Switch	08-00-3
Inspection and Verification	08-00-2
Symptom Chart	08-00-2
REMOVAL AND INSTALLATION	
Dowels, Flywheel	08-00-3
Dowels, Transmission Housing to Block	08-00-3
Transmission Input Shaft Pilot Bearing	08-00-4
CLEANING AND INSPECTION	
Clutch Disc	08-00-4
Clutch Master Cylinder	08-00-6
Clutch Pedal	08-00-6
Clutch Pressure Plate	08-00-4
Clutch Release Hub and Bearing	08-00-5
Clutch Release Lever (7.3L Diesel and 7.5L Gasoline Engines)	08-00-6
CLEANING AND INSPECTION (Cont'd.)	
Cylinder, Clutch Slave	08-00-6
Clutch Hydraulic Fluid Level Check	08-00-6
Flywheel	08-00-5
Flywheel Housing	08-00-6
Flywheel Runout Check	08-00-5
Transmission Input Shaft Pilot Bearing, Needle Type	08-00-5
Transmission Input Shaft Spline	08-00-6
ADJUSTMENTS	
Clutch Hydraulic System Bleeding	08-00-7
Clutch Master Cylinder Push Rod Adjustment	08-00-7
Clutch Pedal	08-00-6
Clutch Slave Cylinder Push Rod Travel Measurement, 7.3L Diesel and 7.5L Gasoline Engines, External Clutch Slave Cylinder Applications	08-00-6
SPECIFICATIONS	08-00-7
SPECIAL SERVICE TOOLS/EQUIPMENT	08-00-7

VEHICLE APPLICATION

F-250 Heavy Duty, F-350 and F-Super Duty Equipped with Manual Transmission

DESCRIPTION AND OPERATION

Clutch System

The purpose of the clutch is to transfer power from the engine to the drivetrain. It connects and disconnects a manually operated transmission (7003) and the remainder of the drivetrain system from the engine. This permits starting and stopping the vehicle and shifting.

The clutch consists of a clutch disc (7550) splined to the transmission input shaft (7017), the clutch pressure plate (7563) and clutch slave cylinder assembly.

Another internal part is the transmission input shaft pilot bearing (7118) (needle type) mounted in the rear face of the crankshaft (6303), which supports the end of the input shaft. The roller bearings are designed for long life and require no periodic maintenance.

DESCRIPTION AND OPERATION (Continued)

For more information, refer to Section 08-01 and Section 08-02.

DIAGNOSIS AND TESTING

Inspection and Verification

1. Verify the vehicle owner's original concern by operating the clutch system to duplicate the condition.
2. Visually inspect the following:

VISUAL INSPECTION CHART

Mechanical
• Clutch hydraulic fluid level and condition
• Clutch master cylinder and reservoir
• Clutch slave cylinder and release lever
• Clutch hydraulic line
• Transmission oil level and condition
• Clutch pedal (lubricate pivot point if necessary)
• Flywheel housing
• Engine and transmission mounts

3. Check the vehicle for signs of clutch fluid leakage. Refer to Section 08-02 for an illustration of the hydraulic clutch control systems.
4. If the concern(s) remain after the inspection, determine the symptoms and proceed to the symptom chart.

Official Licensed Product

Symptom Chart

CLUTCH SYSTEM

Condition	Possible Source	Action
• Clutch Slippage	• Clutch master cylinder. • Clutch slave cylinder. • Damaged or weakened diaphragm spring. • Damaged clutch pressure plate. • Oil on clutch disc facing. • Hardened or worn clutch disc. • Damaged flywheel.	• INSPECT components as described in the Cleaning and Inspection portion of this section.
• Clutch Chatter or Shudder NOTE: A light chatter or shudder in the vehicle when engaging the clutch at low engine rpm is a normal occurrence. Therefore, drivetrain components, particularly the clutch pressure plate, should not be replaced or rebuilt in an attempt to eliminate this condition.	• Oil on clutch disc facing. • Damaged clutch pressure plate or excessive runout. • Hardened or worn clutch disc facing. • Damaged or hardened flywheel surface.	• INSPECT components as described in the Cleaning and Inspection portion of this section.
• Clutch Drag	• Clutch master cylinder. • Clutch slave cylinder. • Weakened diaphragm spring. • Excessive runout or damaged clutch disc. • Rusted or worn clutch disc splines. • Oil on facing.	• INSPECT components as described in the Cleaning and Inspection portion of this section.
• Clutch Pedal Pulsation	• Excessive flywheel runout.	• CHECK flywheel runout. REFER to Section 03-00.

DIAGNOSIS AND TESTING (Continued)

CLUTCH SYSTEM (Continued)

Condition	Possible Source	Action
• Clutch-Related Vibrations	• Engine component grounding against frame. • Accessory drive component and drive belt loose or damaged. • Loose flywheel bolts. • Excessive flywheel runout. • Clutch pressure plate imbalance. • Clutch release bearing.	• INSPECT and SERVICE as required. • REFER to Section 03-05. • REFER to the appropriate engine section in Group 03. • CHECK flywheel runout. REFER to Section 03-00. • INSPECT components as described in the Cleaning and Inspection portion of this section.
• Hard Shifting	• Transmission concern. • Clutch master cylinder. • Clutch slave cylinder. • Damaged or worn transmission input shaft pilot bearing. • Damaged or worn clutch disc. • Damaged or worn clutch pressure plate. • Damaged clutch release hub and bearing.	• CHECK transmission. REFER to Section 07-03. • INSPECT components as described in the Cleaning and Inspection portion of this section.
• Excessive Clutch Noise	• Excessive crankshaft end play. • Excessive flywheel runout. • Damaged clutch release hub and bearing. • Poor lubrication of clutch release hub and bearing sleeve. • Damaged or worn transmission input shaft pilot bearing. • Worn pivot points or clutch release lever (if so equipped). • Torsion spring fatigue.	• CHECK crankshaft end play. REFER to Section 03-00. • CHECK flywheel runout. REFER to Section 03-00. • INSPECT components as described in the Cleaning and Inspection portion of this section.

Official Licensed Product

Component Tests

Clutch Pedal Position Switch

Refer to Section 07-14.

REMOVAL AND INSTALLATION

Dowels, Transmission Housing to Block

Removal

1. Remove the transmission (7003). Refer to Section 07-03.
2. **CAUTION: Block dowels should be pulled or driven from their seats. Do not damage surface area around the block dowel.**

   Remove block dowels using a drift pin where dowel is installed in a drilled hole and vice grip pliers or a similar tool where dowel is installed in a blind hole.

Installation

1. **CAUTION: Drive block dowel squarely into place until fully seated. Do not damage the surrounding surface area.**

   Install all solid type block dowels using a brass or plastic mallet.

Dowels, Flywheel

Removal

1. NOTE: Prior to dowel removal, remove the clutch pressure plate. Refer to Section 08-01.

   Remove dowels using a drift pin where the dowel is installed in a drilled hole and vise grip pliers where the dowel is installed in a blind hole.
2. **CAUTION: Do not damage dowel hole or surface area around dowel during removal.**

   Pull or drive dowels from their seats.

REMOVAL AND INSTALLATION (Continued)

Installation

1. **CAUTION: Do not damage surrounding surface areas.**

   Drive dowels into place using a brass or plastic mallet. Drive the dowel squarely into place until fully seated.

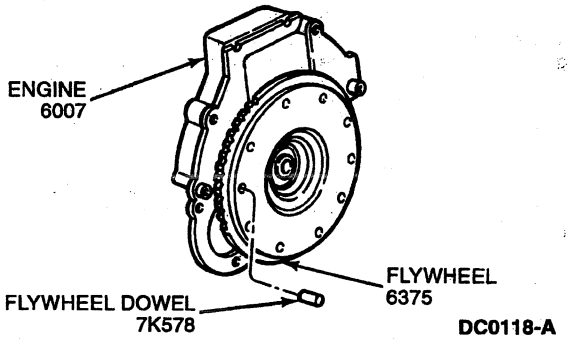

Transmission Input Shaft Pilot Bearing

Refer to Section 08-01.

CLEANING AND INSPECTION

Clutch Pressure Plate

1. **CAUTION: Do not use cleaners with a petroleum base, and do not immerse the clutch pressure plate (7563) in the solvent.**

   NOTE: The Belleville design clutch pressure plate does not need to be lubricated.

   Clean clutch pressure plate and flywheel with a suitable commercial alcohol base solvent so surfaces are free from any oil film.
2. Inspect surface of clutch pressure plate for burn marks, scores, flatness or ridges.
3. If the clutch pressure plate is badly heat-checked or deeply scored, replace clutch pressure plate and cover assembly.
4. Check clutch pressure plate finger heights.
5. If a substantial difference in finger wear exists, the heavily worn finger is binding. Replace the clutch pressure plate.

Clutch Disc

1. Inspect the clutch disc facings for oil or grease. Eliminate the source of any oil or grease before replacing the clutch disc (7550).
   - An excessive amount of grease on the clutch release hub and bearing (7548) will find its way to the clutch disc facings.
   - Too much lubricant in the transmission (7003) or a plugged transmission vent will force the transmission lubricant out the input shaft (7017) and onto the disc facings.
   - Leaking rear engine seals or loose or unsealed flywheel housing retaining bolts allow engine oil to flow onto the disc facings.
2. NOTE: Use emery cloth to remove minor imperfections in the clutch disc lining surface.

   Check for worn clutch disc lining. Measure the depth to the rivet heads with a slide caliper. The minimum allowable depth is 0.3 mm (0.012 inch).

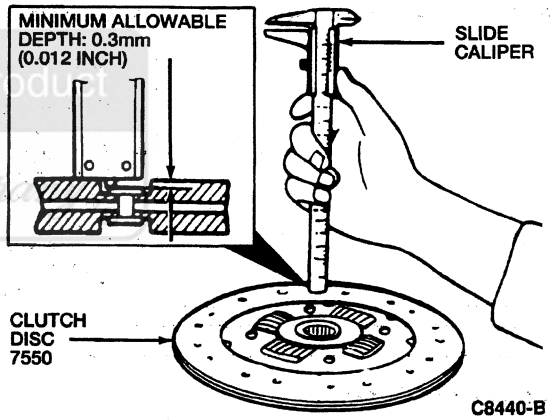

3. Inspect the clutch disc for worn or loose facings.
4. Check the clutch disc for warpage and for loose rivets at the hub.
5. Check for broken springs.

Ford Licensed Product
Ford Motor Company

CLEANING AND INSPECTION (Continued)

6. Check the runout of the clutch disc using Dial Indicator with Bracketry D78P-4201-F and Dial Indicator D78P-4201-G or equivalents. The maximum allowable runout is 0.700 mm (0.0276 inch).

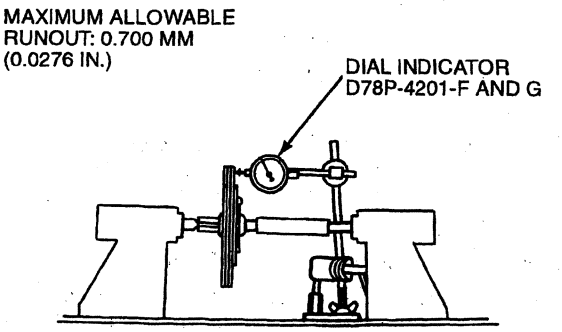

DC0119-A

7. Check for wear or rust on the splines and remove with an emery cloth.
8. Replace clutch disc if any of these conditions are present. When installing a new clutch disc, do not drop or contaminate with oil or grease.

Flywheel

1. Inspect flywheel for cracks, heat checks or other damage.
2. **CAUTION: If more than 1.143 mm (0.045 inch) (gasoline) or 1.524 mm (0.060 inch) (diesel) of stock from original thickness of flywheel needs to be removed, replace flywheel.**

   Refer to Section 03-00 or Section 03-01C for flywheel clutch surface machining. Refer to the appropriate engine section in Group 03 for flywheel removal and installation procedures.

Flywheel Runout Check

Refer to Section 03-00.

Transmission Input Shaft Pilot Bearing, Needle Type

1. NOTE: Transmission input shaft pilot bearing (7118) is pressed into crankshaft and should not be loose. Check transmission input shaft pilot bearing fit in crankshaft bore.

   Check the transmission input shaft pilot bearing for misalignment and press fit condition in crankshaft (6303).
2. Visually inspect the needle rollers for worn or broken rollers, inadequate grease and discoloration due to heating. Also inspect transmission input shaft (7017) for scoring and proper lubrication.
3. Check the condition of the transmission input shaft pilot bearing seal. There should be no visible grease leakage on the transmission input shaft pilot bearing retainer or the crankshaft. Refer to Section 08-01 to replace.

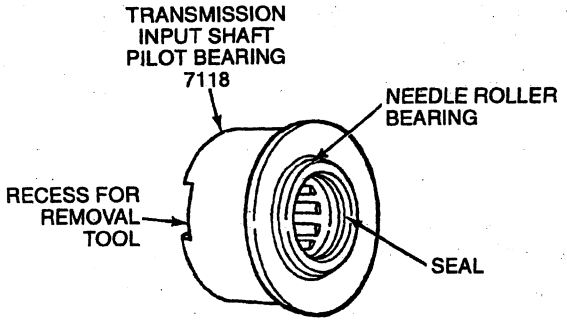

C12757-A

Clutch Release Hub and Bearing

Cleaning

Wipe all oil and dirt off the clutch release hub and bearing (7548). The clutch release hub and bearing is prelubricated and should not be cleaned with solvent. On all vehicles, the clutch release hub and bearing are serviced as a single unit. Do not disassemble for inspection or replacement.

Inspection

Inspect the clutch release hub and bearing as follows:

- Hold the clutch release hub and bearing and back plate. Rotate outer race while applying a compressive pressure. If bearing rotation is rough, replace clutch release hub and bearing.
- Inspect/remove any surface scoring or burrs that may impede the sliding motion of the clutch release hub and bearing on the transmission main drive gear bearing retainer (7050). Any scoring or burrs should be polished off with a fine grade emery paper.

Lubrication

Prior to installation, lubricate clutch release hub and bearing with lithium base grease such as Premium Long-Life Grease XG-1-C or -K or equivalent meeting Ford specification ESA-M1C75-B, at the following points:

- Fill annular groove of clutch release hub and bearing.
- Thin coat on inside diameter of clutch release hub and bearing.

Official Licensed Product
Ford Motor Company

CLEANING AND INSPECTION (Continued)

- Fingers of clutch release lever (7515) (7.3L diesel and 7.5L gasoline engines only).
- Fulcrum point of clutch release lever (7.3L diesel and 7.5L gasoline engines only).

Failure Situations

Failure situations for release bearing operation include the following:

- Misalignment of clutch release lever (7.3L diesel and 7.5L gasoline engines only).
- Misalignment between engine (6007) and transmission (7003). This condition will exhibit symptoms such as transmission jumping out of gear, driveshaft vibration, excessive spin time resulting in gear clash, and clutch chatter on start-up.

Clutch Release Lever (7.3L Diesel and 7.5L Gasoline Engines)

Check for cracks or distortion. Replace if necessary. Refer to Section 08-02.

Flywheel Housing

Check for cracks or distortion. Replace if necessary. Refer to Section 07-03.

Transmission Input Shaft Spline

Check input shaft splines for damage. Replace as necessary. Refer to Section 07-03.

Clutch Pedal

Check the clutch pedal (7519) for the following:

- worn or damaged clutch pedal
- twisted or bent pedal
- worn or damaged pedal pad

Clutch Master Cylinder

1. **CAUTION: Clean all rubber clutch master cylinder parts with specified clutch fluid.**

   Clean all of the clutch master cylinder components.
2. Check the clutch master cylinder (7A543) for the following conditions:
   - weak spring
   - damage to any reservoir components
   - damaged cups
   - scored piston

Cylinder, Clutch Slave

1. Clean all of the clutch slave cylinder components.
2. Check the clutch slave cylinder for the following:
   - weak spring
   - worn or damaged piston cup
   - worn or damaged boot
   - worn or bent push rod
   - leaking fluid
3. Check for traces of fluid inside the clutch housing portion of the case (7005). If fluid is visible, replace clutch slave cylinder. Refer to Section 08-02.

Clutch Hydraulic Fluid Level Check

CAUTION: All clutch system components must be properly installed before checking the fluid level. The proper fluid level is indicated by a step on the clutch master cylinder reservoir. The upper portion of the reservoir must accept fluid displaced from the clutch slave cylinder (7A508) as the clutch wears. Do not overfill.

CAUTION: Carefully clean the top and sides of the clutch master cylinder reservoir before opening the cover to prevent contamination of the system with dirt, water or other foreign material. Remove the clutch master cylinder reservoir diaphragm when checking or adding fluid. Carefully install the diaphragm, cover gasket and cover after filling the reservoir.

NOTE: If the clutch master cylinder reservoir requires any fluid, check the hydraulic system components for leakage.

If required, fill the clutch master cylinder reservoir to the specified level with Ford High-Performance DOT 3 Brake Fluid C6AZ-19542-AA or equivalent DOT 3 fluid meeting Ford specification ESA-M6C25-A.

ADJUSTMENTS

Clutch Pedal

The hydraulic clutch system provides automatic clutch adjustment to compensate for disc wear. No adjustment of clutch linkage or clutch pedal position is required.

Clutch Slave Cylinder Push Rod Travel Measurement, 7.3L Diesel and 7.5L Gasoline Engines, External Clutch Slave Cylinder Applications

1. Verify hydraulic fluid is at a proper level in the clutch master cylinder (7A543). Refer to Clutch Hydraulic Fluid Level Check in the Cleaning and Inspection portion or this section.

Official Licensed Product Ford Motor Company

ADJUSTMENTS (Continued)

2. With the clutch pedal (7519) pressed fully to the floor, measure the external clutch slave cylinder push rod travel.
3. **CAUTION: Do not replace the slave cylinder if the measurement exceeds this distance.**

   The push rod should extend 11 mm (0.43 inch) minimum.

Clutch Hydraulic System Bleeding

Refer to Section 08-02.

Clutch Master Cylinder Push Rod Adjustment

To determine if the clutch master cylinder push rod and clutch master cylinder lever pin are in the correct relationship, disconnect the push rod and note if it will reassemble to the pin. When the push rod is disconnected from the pin, the clutch master cylinder piston is fully retracted rearward and the clutch pedal blade is contacting the rubber bumper UP stop.

If the two components are not in alignment, perform the following only in this sequence:

1. Tighten left side clutch pedal retaining nut.
2. Install clutch master cylinder push rod to the clutch push rod bracket pin.
3. NOTE: This step is mandatory.

   Stroke clutch pedal (7519) several times to reset position of shaft to pedal slot.
4. Again, remove the clutch master cylinder push rod from clutch master cylinder lever pin and evaluate alignment. If the two components are still not in alignment, replace the clutch push rod lever. If the push rod is aligned with the pin, no further action is required.

SPECIFICATIONS

FLYWHEEL SPECIFICATIONS

Flywheel Runout	
Maximum Runout	0.2 mm (0.008 Inch)

CLUTCH SPECIFICATIONS

Description	Specification
Clutch Disc Lining Depth	0.3 mm (0.012 Inch) Minimum
Clutch Disc Runout	0.7 mm (0.0276 Inch) Maximum

LUBRICANT/ADHESIVE/CLEANER SPECIFICATIONS

Description	Part Number	Ford Specification
High-Performance DOT 3 Brake Fluid	C6AZ-19542-AA	ESA-M6C25-A and DOT 3
Premium Long-Life Grease	XG-1-C or -K	ESA-M1C75-B

GENERAL SPECIFICATIONS

Item	Specification
Transmission	5-Speed
Clutch Control	Hydraulic
Clutch Pedal Type	Suspended

TORQUE SPECIFICATIONS

Description	N·m	Lb-In
Bleeder Screw	3-5	27-44

SPECIAL SERVICE TOOLS/EQUIPMENT

SPECIAL SERVICE TOOLS DESIRED

Tool Number	Description
D78P-4201-F	Dial Indicator with Bracketry
D78P-4201-G	Dial Indicator

Ford Motor Company Special Licensed Publication

SECTION 08-01 Clutch/Pressure Plate

SUBJECT	PAGE
VEHICLE APPLICATION	08-01-1
DESCRIPTION AND OPERATION	
Clutch System	08-01-1
DIAGNOSIS AND TESTING	
Clutch/Pressure Plate	08-01-1
REMOVAL AND INSTALLATION	
Clutch Release Hub and Bearing	08-01-5
Clutch Release Lever	08-01-5
Disc and Pressure Plate	08-01-1
Flywheel	08-01-4
REMOVAL AND INSTALLATION (Cont'd.)	
Ring Gear, Flywheel	08-01-5
Transmission Input Shaft Pilot Bearing	08-01-4
CLEANING AND INSPECTION	
Clutch/Pressure Plate	08-01-5
ADJUSTMENTS	
Clutch	08-01-5
SPECIFICATIONS	08-01-6
SPECIAL SERVICE TOOLS/EQUIPMENT	08-01-6

VEHICLE APPLICATION

F-250 Heavy Duty, F-350 and F-Super Duty Equipped with Manual Transmission

DESCRIPTION AND OPERATION

Clutch System

The clutch consists of a single-plate, dry friction clutch disc (7550) with a diaphragm-style spring clutch pressure plate (7563). A splined hub attaches the clutch disc to the transmission input shaft (7017). A diaphragm spring, located between two fulcrum rings, is riveted to the clutch cover. The clutch operating mechanism consists of either a clutch release hub and bearing (7548), clutch release lever (7515) and external clutch slave cylinder, or an internal concentric clutch slave cylinder (7A508).

A transmission input shaft pilot bearing (7118) mounted in the crankshaft (6303) supports the end of the input shaft. The pilot bearing is designed for long life and does not require periodic maintenance.

NOTE: The clutch disc and clutch pressure plate for diesel engine-equipped vehicles is 310 mm (12 inches).

DIAGNOSIS AND TESTING

Clutch/Pressure Plate

Refer to Section 08-00.

REMOVAL AND INSTALLATION

Disc and Pressure Plate

SPECIAL SERVICE TOOL(S) REQUIRED

Description	Tool Number
Clutch Coupling Tool	T88T-70522-A

Removal

1. Disconnect the battery negative cable.
2. Remove either the external clutch slave cylinder or, on concentric clutch slave cylinder (7A508) applications, disconnect the hydraulic line quick disconnect, using Clutch Coupling Tool T88T-70522-A.
3. Remove dust shield and clutch release lever (7515), if so equipped. Refer to Section 08-02.
4. Remove the transmission (7003) from the vehicle. Refer to Section 07-03.
5. Mark assembly position of the clutch pressure plate (7563) to the flywheel if the original clutch components are to be installed.
6. Remove clutch pressure plate and clutch disc (7550) from flywheel. Remove the transmission input shaft pilot bearing (7118) only if replacement is required.

REMOVAL AND INSTALLATION (Continued)

Installation

CAUTION: The 7.3L cover assembly bolt is 5/16 x 18 x 0.75 while the 7.5L MFI cover bolt is 5/16 x 18 x 0.92. The 0.92-inch bolt cannot be used with the dual mass flywheel because it will extend beyond the inner surface of the secondary flywheel and interfere with the primary flywheel. Only the 0.75-inch cover bolt can be used with the dual mass flywheel.

1. Position clutch disc to the flywheel so Truck Clutch Alignment Shaft D79T-7550-A or equivalent can enter the transmission input shaft pilot bearing and align the disc.
2. Position clutch pressure plate to the flywheel.
3. Align clutch pressure plate and clutch disc, and install the retaining bolts that fasten assembly to flywheel. If installing original clutch components, use the location marks made during removal.
4. On vehicles equipped with 5.8L engine, tighten retaining bolts to 30-40 N·m (22-30 lb-ft); with 7.3L engine to 26-35 N·m (19-26 lb-ft); or with 7.5L engine to 19-26 N·m (14-19 lb-ft).
5. Remove clutch alignment tool.
6. On 7.3L diesel and 7.5L gasoline engines (6007), clean and lubricate the following:
   a. transmission main drive gear bearing retainer (7050)
   b. bearing hub bore and install on the main drive gear bearing retainer
   c. clutch release lever stud (7B602) and fingers of the clutch release lever with Premium Long-Life Grease XG-1-C or -K or equivalent meeting Ford specification ESA-M1C75-B
7. Install the transmission. Refer to Section 07-03.
8. Install clutch release lever and dust shield, if so equipped. Refer to Section 08-02.
9. Install the external clutch slave cylinder (7.3L or 7.5L engine), or attach hydraulic tube quick connect fitting (5.8L engine).
10. NOTE: When the battery (10655) has been disconnected and reconnected, some abnormal drive symptoms may occur while the powertrain control module (PCM)(12A650) relearns its adaptive strategy. The vehicle may need to be driven 16 km (10 miles) or more to relearn the strategy.

    Connect battery negative cable.
11. Operate vehicle to check clutch operation.

Official Licensed Product
Ford Motor Company

Clutch Installation, F-250 Heavy Duty and F-350 with 5.8L Engine (ZF Light-Duty)

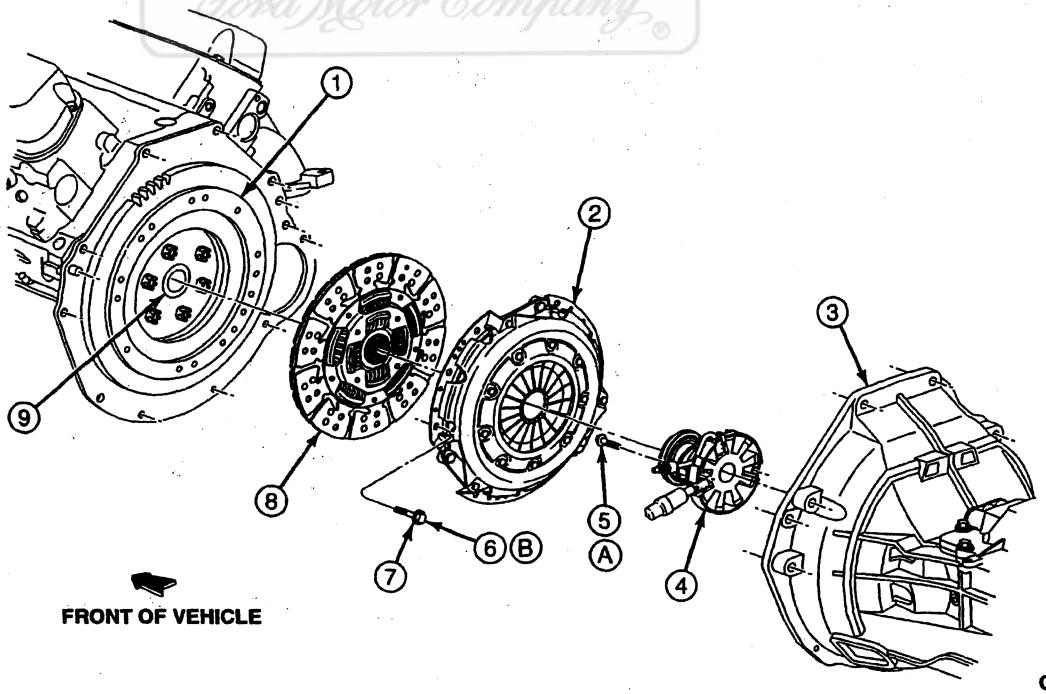

C12762-A

Item	Part Number	Description
1	6375	Flywheel
2	7563	Clutch Pressure Plate

(Continued)

Item	Part Number	Description
3	7003	Transmission
4	7A508	Clutch Slave Cylinder

(Continued)

REMOVAL AND INSTALLATION (Continued)

Item	Part Number	Description
5	N605907-S101	Bolt, M8-1.25 x 30
6	387299-S2	Bolt, 3/8-16 x .97 (11-Inch)
7	34792-S2	Washer
8	7550	Clutch Disc
9	7118	Transmission Input Shaft Pilot Bearing

(Continued)

Item	Part Number	Description
A	—	Tighten to 19-26 N·m (14-19 Lb-Ft)
B	—	Tighten to 30-40 N·m (22-30 Lb-Ft)

Clutch Installation, F-250 Heavy Duty, F-350 and F-Super Duty with 7.3L Diesel Engine and 7.5L (460 CID) V-8 Engine (ZF Heavy-Duty)

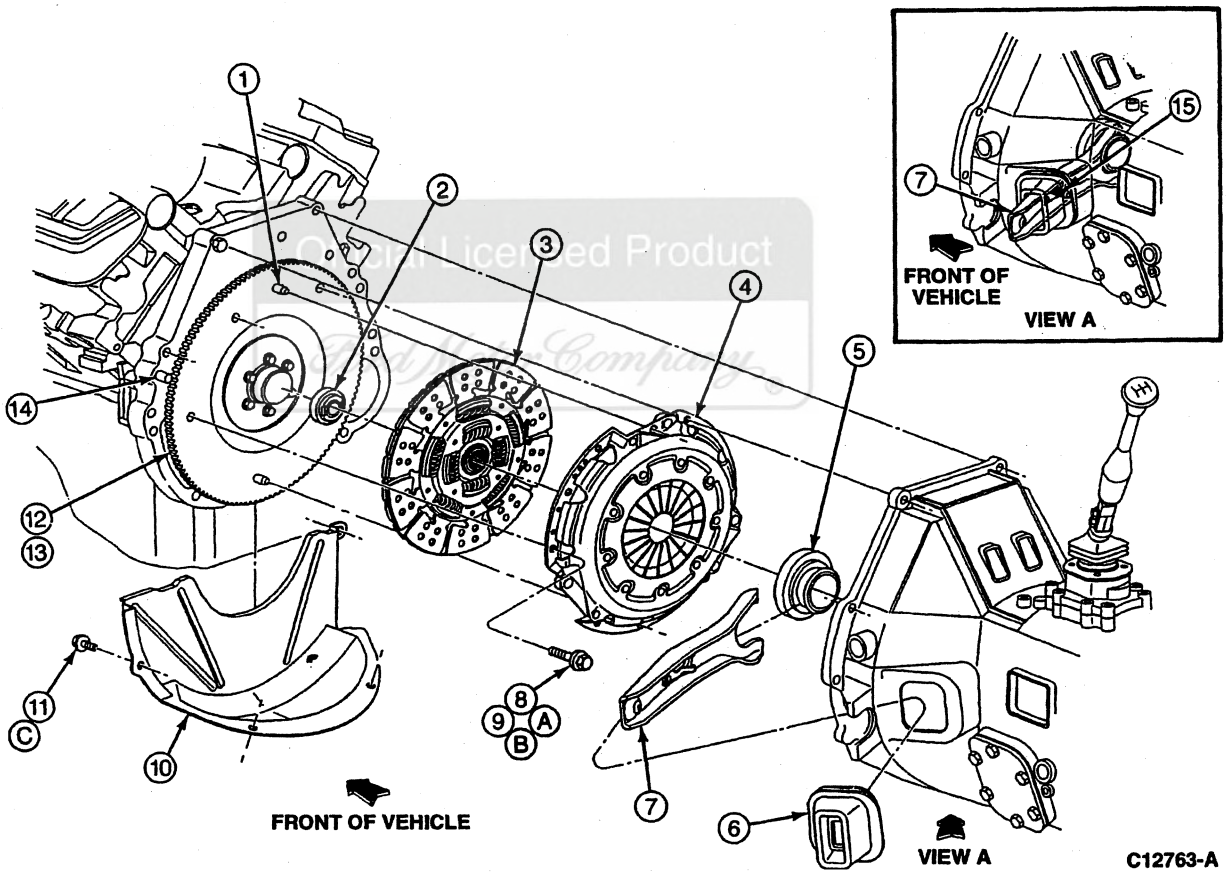

Item	Part Number	Description
1	—	Flywheel Dowel (Part of 6477)
2	7118	Transmission Input Shaft Pilot Bearing
3	7550	Clutch Disc
4	7563	Clutch Pressure Plate
5	7548	Clutch Release Hub and Bearing

(Continued)

Item	Part Number	Description
6	7513	Clutch Release Lever Dust Shield
7	7515	Clutch Release Lever
8	391070-S100	Bolt, 5/16 x 18 x .75 (8 Req'd) (7.3L)
9	389572-S2	Bolt, 5/16 x 18 x .92 (8 Req'd) (7.5L)
10	7007	Engine Rear Plate

(Continued)

REMOVAL AND INSTALLATION (Continued)

Item	Part Number	Description
11	56519-S2	Bolt, 5/16 x 18
12	6477	Flywheel, 7.3L
13	6375	Flywheel, 7.5L
14	6397	Flywheel Housing to Block Dowel, 7.5L
15	7B602	Clutch Release Lever Stud

(Continued)

Item	Part Number	Description
A	—	Tighten to 26-35 N·m (19-26 Lb-Ft) (7.3L)
B	—	Tighten to 19-26 N·m (14-19 Lb-Ft) (7.5L)
C	—	Tighten to 11-15 N·m (8-11 Lb-Ft)

Flywheel

Removal

1. Remove transmission (7003). Refer to Section 07-03.
2. Remove clutch pressure plate (7563) and clutch disc (7550). Refer to Disc and Pressure Plate in the Removal and Installation portion of this section.
3. Remove flywheel. Refer to the appropriate engine section in Group 03.
4. To replace ring gear, if applicable, refer to Ring Gear, Flywheel, in the Removal and Installation portion of this section.

Installation

1. Follow removal procedure in reverse order.

Transmission Input Shaft Pilot Bearing

SPECIAL SERVICE TOOL(S) REQUIRED

Description	Tool Number
Puller	T58L-101-B

Removal

1. Remove transmission (7003). Refer to Section 07-03.
2. Remove clutch pressure plate (7563) and clutch disc (7550). Refer to Disc and Pressure Plate in the Removal and Installation portion of this section.
3. Using Puller T58L-101-B, remove transmission input shaft pilot bearing (7118).

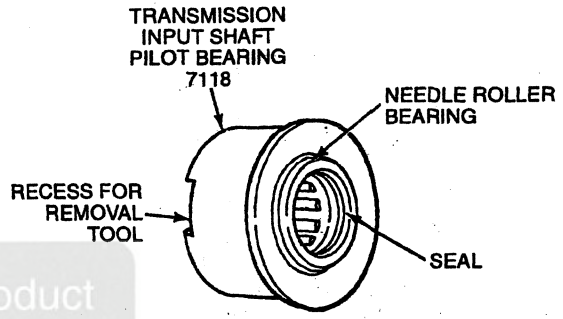

C12757-A

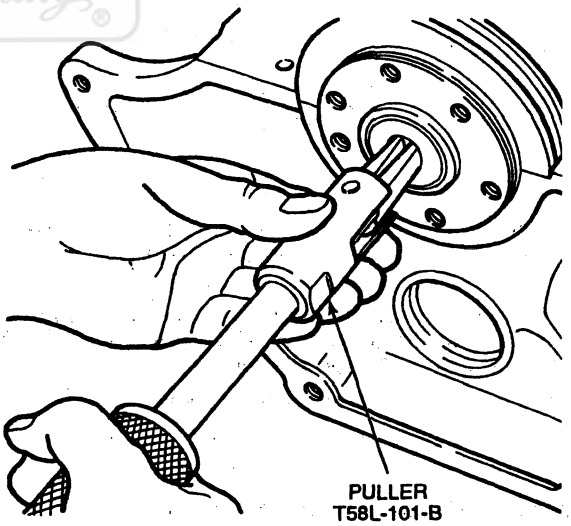

DC0005-A

Official Licensed Product Ford Motor Company

REMOVAL AND INSTALLATION (Continued)

Installation

CAUTION: A new transmission input shaft pilot bearing must be installed whenever the transmission input shaft pilot bearing is removed.

NOTE: The transmission input shaft pilot bearing can only be installed with the seal end facing the transmission. The bearing and seal are pregreased and do not require additional lubrication.

1. **CAUTION: Make sure installation tool and bearing are properly aligned to the crankshaft bore.**

   Using a suitable pilot bearing replacer, install the transmission input shaft pilot bearing with seal facing transmission.

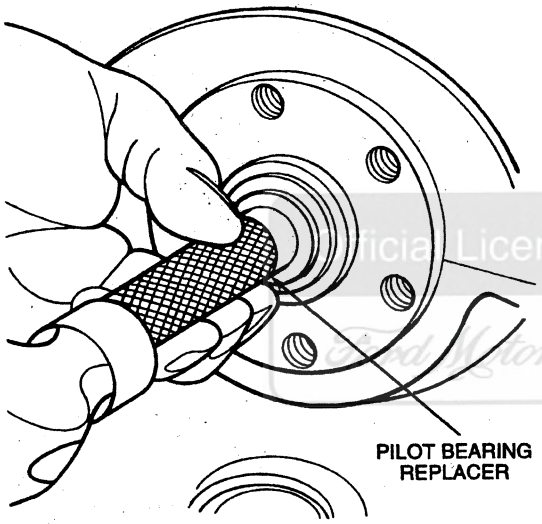

DC0006-A

2. Install clutch disc and clutch pressure plate. Refer to Disc and Pressure Plate in the Removal and Installation portion of this section.
3. **CAUTION: Use care not to damage the pilot bearing while inserting the input shaft (7017) during installation of transmission.**

   Install transmission. Refer to Section 07-03.

Clutch Release Hub and Bearing

Refer to Section 08-02.

Clutch Release Lever

Refer to Section 08-02.

Ring Gear, Flywheel

Removal

1. Remove transmission (7003). Refer to Section 07-03.
2. Remove clutch pressure plate (7563) and clutch disc (7550). Refer to Disc and Pressure Plate in the Removal and Installation portion of this section.
3. Remove flywheel. Refer to the appropriate engine section in Group 03.
4. **CAUTION: Do not hit the flywheel when removing the ring gear.**

   To replace a damaged or worn ring gear, heat the ring gear with a blow torch on the engine side of the gear, and knock it off the flywheel.

Installation

1. **CAUTION: Do not heat any portion of the gear to a temperature higher than 278°C (500°F). If this limit is exceeded, the hardness will be removed from the ring gear teeth.**

   Heat the new ring gear evenly until the gear expands enough to slip onto the flywheel. Make sure the gear is seated properly against the shoulder.
2. Install clutch disc and clutch pressure plate. Refer to Disc and Pressure Plate in the Removal and Installation portion of this section.
3. Install flywheel. Refer to the appropriate engine section in Group 03.
4. Install transmission. Refer to Section 07-03.

CLEANING AND INSPECTION

Clutch/Pressure Plate

Refer to Section 08-00.

ADJUSTMENTS

Clutch

Refer to Section 08-00.

SPECIFICATIONS

PRESSURE PLATE AND CLUTCH DISC SPECIFICATIONS

Specifications	5.8L V-8 EFI	7.3L V-8 Diesel	7.5L V-8 EFI
Disc Assembly			
Outside Diameter (Approx.) mm (In.)	294 (11.6)	310 (12.2)	312 (12.3)
Inside Diameter (Approx.) mm (In.)	210 (8.3)	190 (7.5)	200 (7.9)
Facing Area Sq. cm (Sq. In.)	665 (103.1)	943 (146.1)	896 (138.8)
Facing Thickness (Ea.) mm (In.)	3.30 (.130)	3.50 (.138)	3.30 (.130)
Compressed Thickness mm (In.)	7.60 (.300)	7.60 (.300)	7.60 (.300)
Lining Material	Woven Non-Asbestos	Woven Non-Asbestos	Woven Non-Asbestos
Number of Torsion Springs and Color Code Identification	4 — Plain, Inner 9 — Plain, Outer	None[a]	5 — Plain, Inner 5 — Plain, Outer
Pressure Plate			
Color Code Identification (Cover)	None	None	None
Pressure Spring	Belleville	Belleville	Belleville
Type (Plate)	Belleville	Belleville	Belleville
Total Plate Pressure Kg (Lb)	918 (2022)	1278 (2817)	1060 (2338)

a 5 — Plain, Inner; 5 — Red, Outer with F-Super Duty only.

LUBRICANT/ADHESIVE/CLEANER SPECIFICATIONS

Description	Part Number	Ford Specification
Premium Long-Life Grease	XG-1 or -K	ESA-M1C75-B

TORQUE SPECIFICATIONS
F-250 HEAVY DUTY AND F-350 WITH 5.8L ENGINE

Description	N-m	Lb-Ft
Clutch Pressure Plate Bolt	30-40	22-30
Concentric Slave Cylinder Bolt	19-26	14-19

TORQUE SPECIFICATIONS
F-250 HD, F-350 AND F-SUPER DUTY WITH 7.3L DIESEL ENGINE AND 7.5L (460 CID) V-8 ENGINE

Description	N-m	Lb-Ft
Clutch Pressure Plate Bolt, 7.5L	19-26	14-19
Rear Engine Cover Plate Bolt	11-15	8-11
Clutch Pressure Plate, 7.3L Diesel Engine	26-35	19-26

SPECIAL SERVICE TOOLS/EQUIPMENT

SPECIAL SERVICE TOOLS REQUIRED

Tool Number/ Description	Illustration
T58L-101-B Puller	 T58L-101-B
T88T-70522-A Clutch Coupling Tool	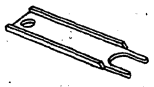 T88T-70522-A

SPECIAL SERVICE TOOLS DESIRED

Tool Number	Description
D79T-7550-A	Truck Clutch Alignment Shaft

Ford Motor Company Unlicensed Product

SECTION 08-02 Clutch Controls

SUBJECT	PAGE
VEHICLE APPLICATION	08-02-1
DESCRIPTION AND OPERATION	
Clutch Control System	08-02-1
Clutch Master Cylinder	08-02-2
Clutch Pedal	08-02-1
Clutch Pedal Position Switch	08-02-1
Cylinder, Clutch Slave	08-02-2
DIAGNOSIS AND TESTING	
Clutch Controls	08-02-2
REMOVAL AND INSTALLATION	
Clutch and Brake Pedal Pivot Shaft Lever	08-02-3
Clutch Hydraulic Line	08-02-4
Clutch Master Cylinder and Reservoir	08-02-4
Clutch Pedal	08-02-2
Clutch Pedal Position Switch	08-02-3
Clutch Release Hub and Bearing	08-02-7
Clutch Release Lever, 7.3L Diesel and 7.5L Gasoline Engines	08-02-8
Cylinder, Clutch Slave, 5.8L Engine	08-02-6

SUBJECT	PAGE
REMOVAL AND INSTALLATION (Cont'd.)	
Cylinder, Clutch Slave, 7.3L Diesel and 7.5L Gasoline Engines	08-02-7
CLEANING AND INSPECTION	
Clutch Controls	08-02-8
ADJUSTMENTS	
Bench Bleed Procedure, Clutch Master Cylinder	08-02-10
Clutch Hydraulic System Bleeding, Concentric Cylinder Clutch Slave, 5.8L Engine	08-02-9
Clutch Hydraulic System Bleeding, External Cylinder Clutch Slave, 7.3L Diesel and 7.5L Gasoline Engines	08-02-9
Alternate Method	08-02-10
Clutch Pedal	08-02-9
Fluid Level	08-02-10
SPECIFICATIONS	08-02-11
SPECIAL SERVICE TOOLS/EQUIPMENT	08-02-11

VEHICLE APPLICATION

F-250 Heavy Duty, F-350 and F-Super Duty Equipped with Manual Transmission

Official Licensed Product
Ford Motor Company

DESCRIPTION AND OPERATION

Clutch Control System

The hydraulic clutch control system consists of a clutch master cylinder fluid reservoir, a clutch master cylinder (7A543), a clutch slave cylinder, connecting tubing, a clutch pedal (7519) and a clutch pedal position switch (CPP)(11A152).

Clutch Pedal

The clutch pedal (7519) is located under the instrument panel next to the brake pedal (2455). The function of the clutch pedal is to manually engage and disengage the clutch at the driver's command.

Clutch Pedal Position Switch

Refer to Section 07-14.

DESCRIPTION AND OPERATION (Continued)

Clutch Master Cylinder

The clutch master cylinder (7A543) and the clutch master cylinder reservoir are located inboard of the power brake booster (2005). Fluid level is checked at the clutch master cylinder reservoir. The clutch master cylinder converts mechanical force of the clutch pedal (7519) into hydraulic force that is transmitted to the clutch slave cylinder (7A508).

Cylinder, Clutch Slave

On vehicles equipped with 7.3L diesel or 7.5L gasoline engines with an S5-47 ZF Heavy-Duty transmission, an external clutch slave cylinder is mounted on the clutch housing portion of the case (7005).

On vehicles equipped with a 5.8L engine with an S5-47 ZF Light-Duty transmission, a concentric clutch slave cylinder (7A508) is mounted on the input shaft (7017).

The clutch slave cylinder converts the hydraulic force transmitted from the clutch master cylinder (7C522) to mechanical force. This mechanical force controls the clutch release hub and bearing (7548).

DIAGNOSIS AND TESTING

Clutch Controls

Refer to Section 08-00.

REMOVAL AND INSTALLATION

Clutch Pedal

Removal

1. Disconnect clutch pedal retracting spring from clutch pedal (7519) and bracket.
2. Remove the nut that retains the clutch pedal to the clutch and brake pedal pivot shaft (7506).
3. Remove the clutch pedal.
4. If the brake pedal (2455) is to be removed, refer to Section 06-06 in the Body, Chassis Manual.

Installation

1. Position clutch pedal on shaft.
2. Install and tighten nut to 68-92 N·m (50-68 lb-ft).
3. Remove old pivot shaft lever and replace with a new one. Refer to Clutch and Brake Pedal Pivot Shaft Lever in the Removal and Installation portion of this section.
4. NOTE: Spring installation is easier if clutch pedal lever assist spring (7534) is first compressed in a vise and retained in a compressed state with mechanics wire until in place. Once in place, cut mechanics wire and remove.

   Install clutch pedal lever assist spring. Make sure clutch pedal lever assist spring engages in clutch pedal and bracket slots.

Official Licensed Product
Ford Motor Company

REMOVAL AND INSTALLATION (Continued)

Clutch Pedal Installation

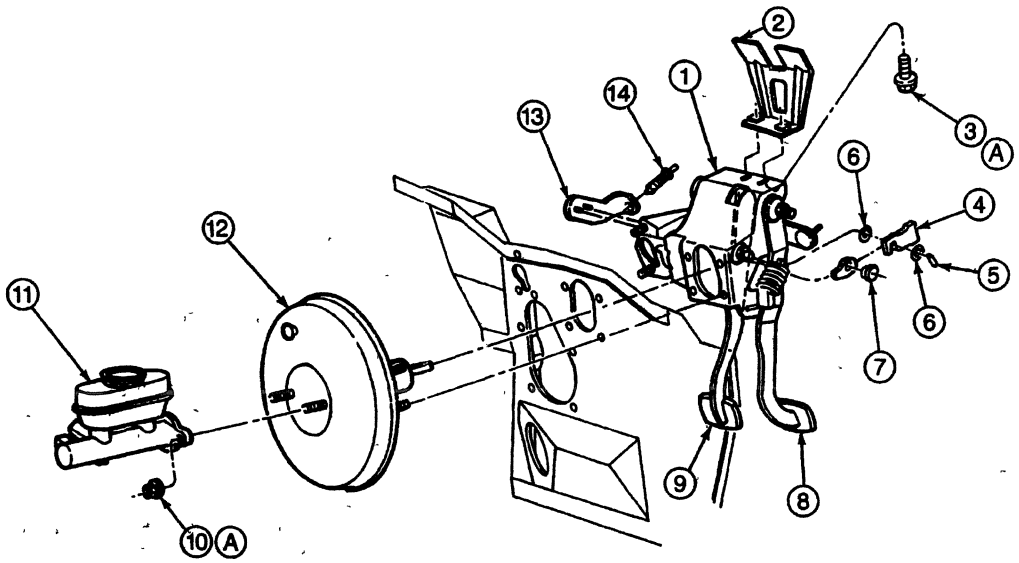

C11125-C

Item	Part Number	Description
1	2450	Brake Pedal and Bracket Assy
2	01508	Pedal Support Bracket (Y Brace)
3	56340-S2	Bolt, M8-1.25 x 16
4	13480	Switch, Stoplight
5	380699-S100	Pin, Self-Locking
6	2B129	Spacer
7	2A309	Bushing
8	7519	Clutch Pedal

(Continued)

Item	Part Number	Description
9	2455	Brake Pedal
10	382802-S2	Nut, 3/8-16 Hex Flange
11	2140	Brake Master Cylinder
12	2005	Power Brake Booster
13	9C961	Bracket, Speed Control Dump Valve
14	9C727	Valve, Speed Control Vacuum Dump
A	—	Tighten to 21-29 N·m (15-21 Lb-Ft)

Clutch Pedal Position Switch

Refer to Section 07-14.

Clutch and Brake Pedal Pivot Shaft Lever

Removal

1. Disconnect clutch master cylinder push rod from clutch and brake pedal pivot shaft lever pin. Use a small screwdriver or putty knife to wedge between lever and snap-in bushing.
2. Remove retaining nut.
3. Pry lever from clutch and brake pedal pivot shaft (7506).

Installation

1. **CAUTION: Always install a new shaft lever following any service on the clutch master cylinder (7A543) or brake and clutch pedal assembly. Failure to do so can result in improper master cylinder push rod initialization, leading to premature clutch failure.**

   Snap the new lever (pin) to the clutch master cylinder push rod bushing.
2. Install lever onto clutch and brake pedal pivot shaft.
3. Finish tightening down clutch master cylinder, pedal bracket or brake booster if required.
4. Install retaining nut finger-tight.
5. Inspect clutch pedal position. Make sure it is against the UP stop.

REMOVAL AND INSTALLATION (Continued)

6. Tighten retaining nut to 68-92 N·m (50-68 lb-ft), allowing knurled teeth on clutch and brake pedal pivot shaft to cut matching teeth in lever for correct positioning.

Clutch Master Cylinder and Reservoir

Removal

1. **CAUTION: For vehicles equipped with external clutch slave cylinders, prior to any vehicle service that requires removal of the clutch slave cylinder (i.e., transmission removal), the master cylinder push rod must be disconnected from the clutch pedal (7519). If not disconnected, permanent damage to the clutch slave cylinder will occur if the clutch pedal is depressed while the clutch slave cylinder is disconnected.**

   NOTE: When replacing a dry clutch master cylinder (7A543), refer to Bench Bleed Procedure, Clutch Master Cylinder in the Adjustments portion of this section.

   From cab interior, carefully pry push rod and retainer bushing from cross-shaft lever pin.
2. Disconnect clutch pedal position switch (CPP)(11A152) harness connector.
3. Remove the two nuts and support bracket retaining the clutch master cylinder reservoir and clutch master cylinder to the bulkhead.
4. **CAUTION: Make sure hydraulic tube connection is free of contamination prior to disconnecting it.**

   Disconnect hydraulic tube from clutch master cylinder.
5. Remove clutch master cylinder reservoir and clutch master cylinder from firewall.
6. When the clutch master cylinder studs are free of dash panel, rotate clutch master cylinder 105 degrees counterclockwise to permit clutch pedal position switch to exit dash panel. Remove unit from vehicle.

Installation

1. **CAUTION: Prior to installation, replace clutch and brake pedal pivot shaft lever as described in the removal and installation procedures in this section.**

   Follow removal procedure in reverse order. Tighten clutch master cylinder retaining nuts to 10-14 N·m (89-124 lb-in).
2. Bleed system. Refer to the appropriate clutch hydraulic system bleeding procedure in the Adjustments portion of this section.

3. As the clutch disc (7550) wears, the fluid level in the clutch master cylinder reservoir will rise. The proper fluid level is indicated by a step on the clutch master cylinder reservoir. Do not overfill. The fill line step in the clutch master cylinder reservoir is the normal level for a new system. The upper portion of the clutch master cylinder reservoir must accept fluid that is displaced from the clutch slave cylinder as the clutch wears.

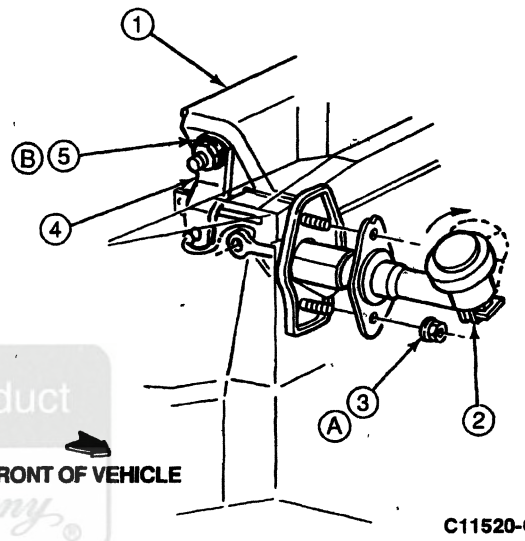

Item	Part Number	Description
1	2450	Brake Pedal and Bracket Assy
2	7A543	Clutch Master Cylinder
3	N620481-S2	Nut
4	7A554	Clutch Pivot Shaft Lever
5	—	Nut (Part of 2450)
A	—	Tighten to 10-14 N·m (89-124 Lb-In)
B	—	Tighten to 68-92 N·m (50-68 Lb-Ft)

Clutch Hydraulic Line

SPECIAL SERVICE TOOL(S) REQUIRED

Description	Tool Number
Clutch Coupling Tool	T88T-70522-A

Official Licensed Product

REMOVAL AND INSTALLATION (Continued)

Removal

1. **CAUTION: Make sure hydraulic tube connection is free of contamination prior to disconnecting it.**

   NOTE: Prior to removal, verify routing of the clutch slave cylinder to clutch master cylinder tube (7A512).

   Remove retainer pin from clutch master cylinder (7A543) holding clutch slave cylinder to clutch master cylinder tube in place.
2. Raise and support vehicle.
3. **CAUTION: Make sure hydraulic tube connection is free of contamination prior to disconnecting it.**

   Disconnect clutch slave cylinder to clutch master cylinder tube from external clutch slave cylinder. On vehicles equipped with concentric clutch slave cylinder (7A508), disconnect tube using Clutch Coupling Tool T88T-70522-A.

Installation

1. Follow removal procedure in reverse order.
2. Bleed system. Refer to appropriate clutch hydraulic system bleeding procedure in the Adjustments portion of this section.

Hydraulic Clutch Control System, 5.8L Engine with S5-47 ZF Light-Duty Transmission and 7.3L and 7.5L Engines with S5-47 ZF Heavy-Duty Transmission

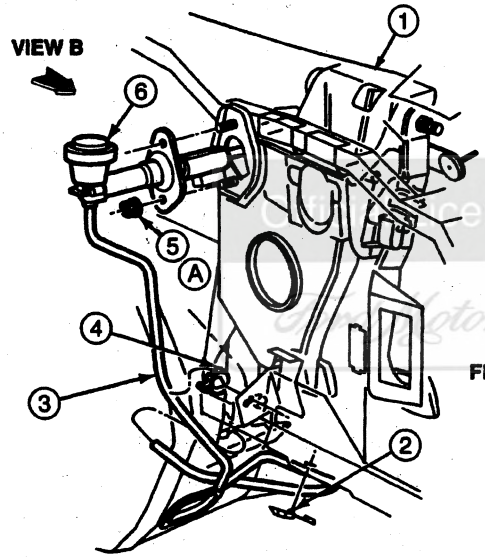

MAZDA R2 AND ZF LIGHT-DUTY

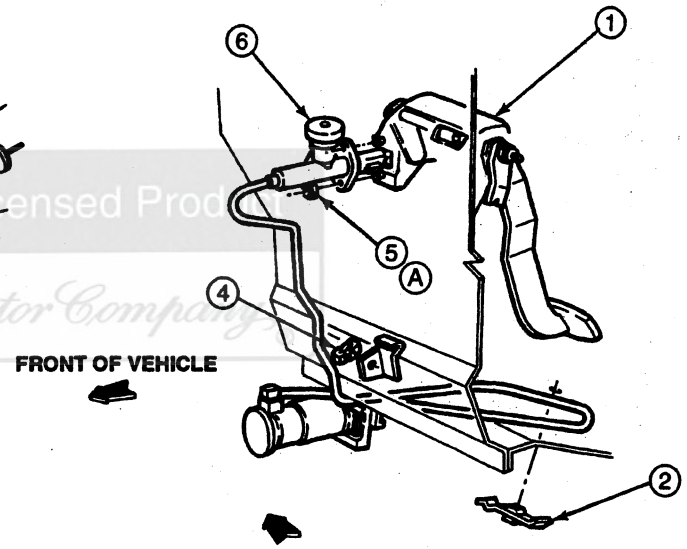

ZF HEAVY-DUTY

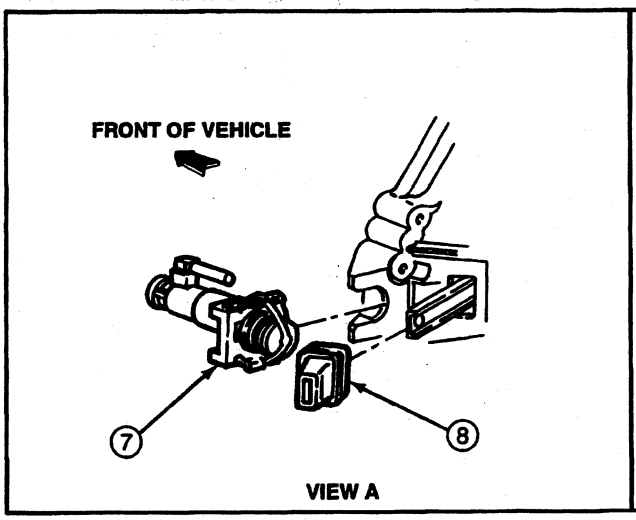

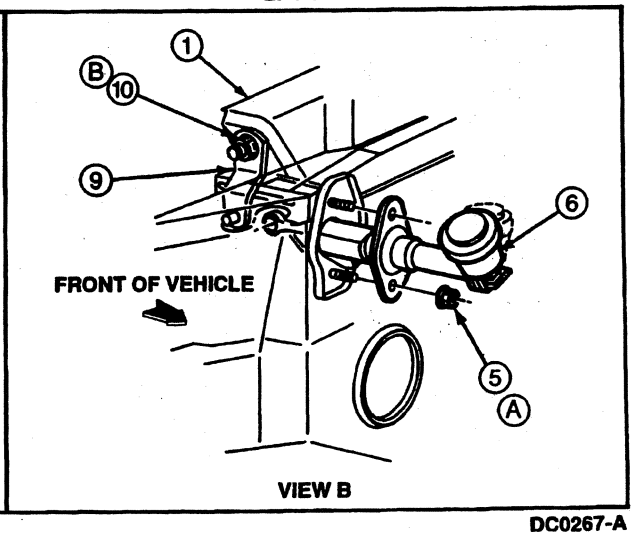

DC0267-A

REMOVAL AND INSTALLATION (Continued)

Item	Part Number	Description
1	2450	Brake Pedal and Bracket Assy
2	N804443-S100	Clip
3	7A512	Clutch Slave Cylinder to Clutch Master Cylinder Tube
4	N806880-S100	Clip, Double
5	N620481-S2	Nut, M8-1.25
6	7A543	Clutch Master Cylinder
7	7A564	Clutch Slave Cylinder

(Continued)

Item	Part Number	Description
8	7513	Clutch Release Lever Dust Shield
9	7A554	Clutch and Brake Pedal Pivot Shaft Lever
10	620483-S2	Nut
A	—	Tighten to 10-14 N·m (89-124 Lb-In)
B	—	Tighten to 68-92 N·m (50-68 Lb-Ft)

Cylinder, Clutch Slave, 5.8L Engine

SPECIAL SERVICE TOOL(S) REQUIRED

Description	Tool Number
Clutch Coupling Tool	T88T-70522-A

Removal

1. **CAUTION: Make sure hydraulic tube connection is free of contamination prior to disconnecting it.**

   Disconnect coupling at transmission (7003) with Clutch Coupling Tool T88T-70522-A by sliding the white plastic sleeve toward the clutch slave cylinder (7A508) while applying a slight tug on tube.

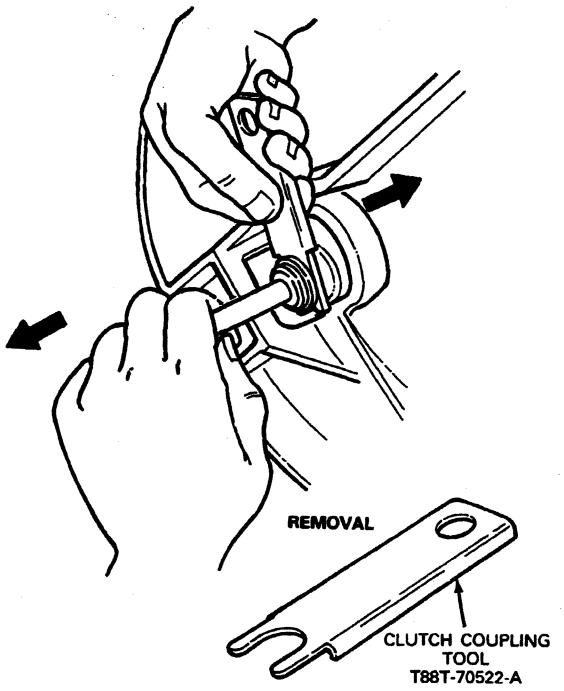

2. Remove the transmission. Refer to Section 07-03.
3. Remove bolts attaching clutch slave cylinder to transmission.
4. Remove clutch slave cylinder from transmission input shaft (7017).

Installation

1. Position clutch slave cylinder over transmission input shaft with bleed screw and coupling facing left side of transmission.
2. Install the cylinder clutch slave retaining bolts and tighten to 19-26 N·m (14-19 lb-ft).
3. Install the transmission. Refer to Section 07-03.
4. Insert male coupling into female coupling on the clutch slave cylinder. Make sure the connection is secure.

Official Licensed Product

REMOVAL AND INSTALLATION (Continued)

5. Bleed the clutch hydraulic system as required. Refer to appropriate clutch hydraulic system bleeding procedure in the Adjustments portion of this section.

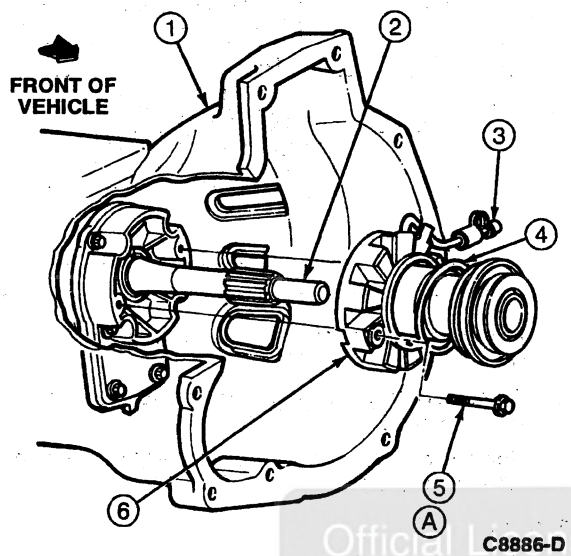

Item	Part Number	Description
1	7005	Case
2	7017	Input Shaft
3	—	Hydraulic Clutch Line Coupling (Part of 7A508 Cylinder Clutch Slave)
4	—	Preload Spring (Part of 7A508)
5	N605907-S101	Bolt (2 Required)
6	7A508	Clutch Slave Cylinder
A	—	Tighten to 19-26 N·m (14-19 Lb-Ft)

Cylinder, Clutch Slave, 7.3L Diesel and 7.5L Gasoline Engines

Removal

1. **CAUTION: Make sure hydraulic tube connection is free of contamination prior to disconnecting it.**

   Remove hydraulic tube retainer pin from clutch slave cylinder.
2. Remove retaining clip from clutch slave cylinder.
3. Remove clutch slave cylinder from transmission (7003).

Installation

1. Follow removal procedure in reverse order.
2. Bleed system as required. Refer to appropriate clutch hydraulic system bleeding procedure in the Adjustments portion of this section.

Clutch Release Hub and Bearing

Removal

1. Remove transmission (7003). Refer to Section 07-03.
2. On 7.3L and 7.5L engine applications, remove clutch release hub and bearing (7548) by sliding it off the transmission input shaft (7017).
3. On 5.8L engine applications, push the clutch release hub and bearing toward transmission, exposing retaining ring. Remove retaining ring. Pull clutch release hub and bearing off the clutch slave cylinder (7A508).

Installation

1. Prior to installation, lubricate bearing bore and bearing carrier with Ford Premium Long-Life Grease XG-1-C or -K or equivalent meeting Ford specification ESA-M1C75-B.
2. On 5.8L engine applications, install clutch release hub and bearing to clutch slave cylinder by pushing into place. Install new retaining ring.
3. On 7.3L or 7.5L engine applications, slide bearing onto the input shaft and input shaft guide tube.
4. Install transmission. Refer to Section 07-03.

Official Licensed Product
Ford Motor Company

REMOVAL AND INSTALLATION (Continued)

Clutch Release Hub and Bearing

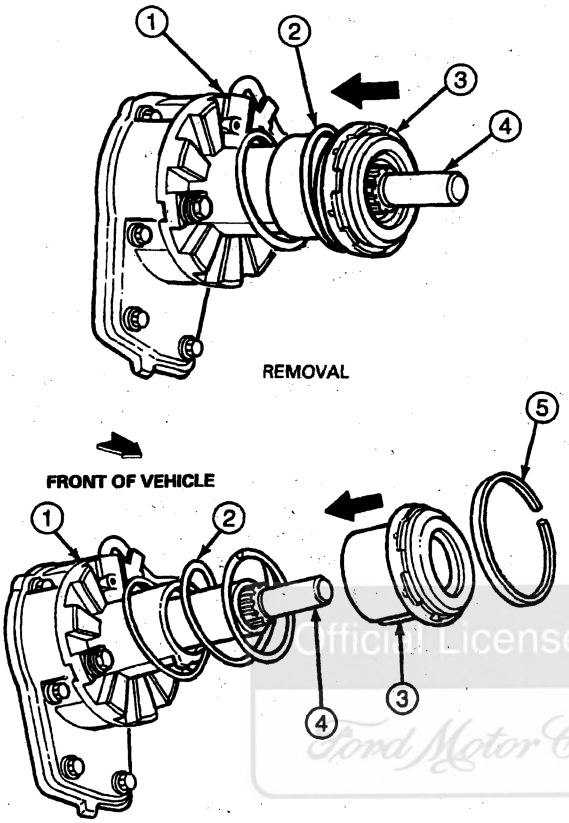

Item	Part Number	Description
1	7A508	Clutch Slave Cylinder
2	—	Preload Spring (Part of 7A508)
3	7548	Clutch Release Hub and Bearing
4	7017	Input Shaft
5	—	C-Clip (Part of 7A508)

Clutch Release Lever, 7.3L Diesel and 7.5L Gasoline Engines

Removal

1. Raise and support vehicle.
2. Push release lever forward to compress clutch slave cylinder.
3. NOTE: The steel retainer clip is permanently attached to the clutch slave cylinder.

   Remove clutch slave cylinder by prying on clip to disengage tangs while pulling clutch slave cylinder free of bracket.
4. Remove clutch release lever dust shield (7513) from opening in clutch housing portion of the case (7005).
5. Remove clutch release lever (7515) by pulling outward.

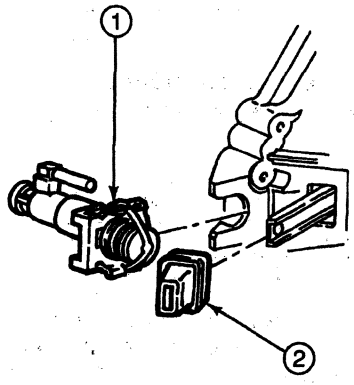

Item	Part Number	Description
1	7A564	Clutch Slave Cylinder
2	7513	Clutch Release Lever Dust Shield

Installation

1. Clean and relube clutch release shaft pivot stud, push rod pockets and fingers of clutch release lever.
2. Install clutch release lever on clutch release hub and bearing (7548) and pivot studs, making sure it is properly positioned.
3. Push the clutch release lever inward until it snaps onto stud.
4. Install clutch release lever dust shield in opening in clutch housing portion of the case.
5. Install clutch slave cylinder and retaining clip.
6. Lower the vehicle.
7. Depress the clutch pedal (7519) ten times to fill clutch slave cylinder and to seat components.
8. Fill and bleed system to remove any air in clutch slave cylinder, lines or clutch master cylinder (7A543). Refer to appropriate clutch hydraulic system bleeding procedure in the Adjustments portion of this section.

CLEANING AND INSPECTION

Clutch Controls

Refer to Section 08-00.

Unofficial Licensed Product
Ford Motor Company

ADJUSTMENTS

Clutch Pedal

The hydraulic clutch system provides automatic clutch adjustment to compensate for disc wear. No adjustment of clutch linkage or clutch pedal position is required. The under-dash mechanism is adjustable and only requires initial adjusting or adjusting if malfunction occurs.

Clutch Hydraulic System Bleeding, Concentric Cylinder Clutch Slave, 5.8L Engine

SPECIAL SERVICE TOOLS DESIRED

Tool Number	Description
T88T-70522-A	Coupling Disconnect Tool

1. If bleeding a dry replacement clutch master cylinder (7A543), refer to Bench Bleed Procedure, Clutch Master Cylinder in the Adjustments portion of this section.
2. **CAUTION: Make sure hydraulic tube connection is free of contamination prior to disconnecting it.**

   Disconnect the coupling at the transmission (7003) with Coupling Disconnect Tool T88T-70522-A or equivalent by sliding the white plastic sleeve toward the clutch slave cylinder (7A508) while applying a slight tug on the clutch tube.
3. **CAUTION: Clean dirt and grease from around the reservoir cap.**

   CAUTION: Brake fluid must be certified to DOT 3 specification.

   Remove cap and diaphragm and fill reservoir to the step with High Performance DOT 3 Brake Fluid C6AZ-19542-AA or equivalent DOT 3 fluid meeting Ford specification ESA-M6C25-A.
4. Apply 10-15 pounds of pressure to clutch pedal (7519).
5. Using a small screwdriver, press the internal mechanism of the male coupling to open the valve. While continuing to hold the valve open, slowly depress the clutch pedal to the floor and hold.
6. Remove the screwdriver from the coupling, closing the valve.
7. Release the clutch pedal.
8. **CAUTION: The reservoir must be kept full at all times to make sure there will be no additional introduction of air into the system.**

   Refill reservoir to level at step.
9. Repeat Steps 4 through 7.
10. Close reservoir. Reconnect the coupling to the clutch slave cylinder. Check that the connection is secure by applying a slight tug to the clutch tube.
11. Stroke the clutch pedal as rapidly as possible for five to ten strokes.
12. Wait one to three minutes.
13. Repeat Steps 11 and 12 three more times.
14. Loosen bleed screw (located in the slave cylinder body next to the inlet connection).
15. Depress and hold clutch pedal while tightening bleed screw 3-5 N·m (27-44 lb-in).
16. Refill the reservoir to level at step.
17. The hydraulic system should now be fully bled and should properly release the clutch.

Clutch Hydraulic System Bleeding, External Cylinder Clutch Slave, 7.3L Diesel and 7.5L Gasoline Engines

1. If bleeding a dry replacement clutch master cylinder (7A543), refer to Bench Bleed Procedure, Clutch Master Cylinder in the Adjustments portion of this section.
2. **CAUTION: Make sure reservoir cap and clutch slave cylinder in area of the tube connection are free of contamination.**

   NOTE: Keep the clutch master cylinder reservoir cap tight to minimize fluid loss.

   Remove clutch slave cylinder from the transmission bell housing.
3. Use a 3/32-inch diameter punch to drive out tube holding pin.
4. Remove the tube from the clutch slave cylinder and place tube end into a container for waste fluid.
5. **CAUTION: Do not allow any moisture or foreign matter to enter slave with brake fluid.**

   NOTE: It may be necessary to rock clutch slave cylinder around or push gently on push rod to expel all the air. Pushing too hard on push rod will cause fluid to spray out of the connector hole.

   Hold clutch slave cylinder so connector port is at highest point, by tipping clutch slave cylinder to approximately 30 degrees. Fill with High Performance DOT 3 Brake Fluid C6AZ-19542AA or equivalent DOT 3 fluid meeting Ford specification ESA-M6C25-A, through connector port.
6. NOTE: Fluid will be expelled from the connector port as the push rod is compressed when attaching it to the transmission (7003) and clutch release lever (7515).

   When all the air is expelled from the clutch slave cylinder and no more bubbles come out of the port hole, install clutch slave cylinder.
7. Gravity fill the clutch master cylinder and tube as follows.
   a. Remove the clutch master cylinder reservoir cap and diaphragm.

ADJUSTMENTS (Continued)

b. Fluid should flow out the open end of the tube into waste container. Be sure to keep the clutch master cylinder reservoir full.

c. When fluid is flowing out in a steady uninterrupted flow and fluid is level with step in clutch master cylinder reservoir, install cap and diaphragm.

d. Install end of tube into clutch slave cylinder.

e. Replace pin holding tube to body of clutch slave cylinder.

f. Remove the slave cylinder from the transmission.

g. Make sure the reservoir is full of fluid. Holding the cylinder so that the port for the tube is at the highest point, slowly push the push rod into the cylinder and slowly let it return. Repeat this step two more times.

h. Reattach the slave cylinder to the transmission.

i. Rapidly press the clutch pedal 10 times through a travel of approximately 1 inch. Wait two minutes.

j. If the pedal is not hard (within 6.35-12.7 mm [0.25-0.50 inch] of travel), repeat bleed procedure.

8. System should be bled and functioning properly. To verify proper system function, perform the following:

a. Set parking brake control (2780) and put vehicle in neutral.

b. Start vehicle and shift into reverse gear.

c. If gears grind, other components may be causing the concern.

d. Check clutch slave cylinder push rod travel. Refer to Section 08-00.

Alternate Method

1. Gravity bleed system in place.
2. NOTE: If clutch release lever cannot be moved toward front of vehicle, the clutch pivot shaft lever is incorrectly set. Refer to clutch master cylinder push rod adjustment procedure in Section 08-00.

   From under vehicle, with clutch slave cylinder bleed port closed, push external part of clutch release lever slowly toward front of vehicle and release. Repeat this cycle 10-15 times until you no longer hear bubbles in the clutch master cylinder.

Bench Bleed Procedure, Clutch Master Cylinder

1. NOTE: When bleeding a dry replacement clutch master cylinder (7A543), remove clutch master cylinder-to-clutch slave cylinder tubing from vehicle and install to new master cylinder.

   Install clutch master cylinder in a vise.
2. Fill master cylinder reservoir with High Performance DOT 3 Brake Fluid C6AZ-19542-AA or equivalent DOT 3 fluid meeting Ford specification ESA-M6C25-A.
3. Insert clutch slave cylinder end of tube in a waste container to prevent fluid from leaking.
4. NOTE: Be sure to keep clutch master cylinder reservoir full during this operation to prevent additional air from entering the master cylinder.

   Push the master cylinder push rod all the way in. While holding the push rod in, plug the end of the tube to prevent air from entering the tube and master cylinder. Perform this step several times until all air has been bled from the clutch master cylinder.
5. When all air is expelled from the clutch master cylinder (no bubbles come out of the tube), install the clutch master cylinder and tubing to the vehicle. Refer to the appropriate clutch hydraulic system bleeding procedure in this section.

Fluid Level

1. If clutch slave cylinder travel does not meet the travel requirements, check the clutch master cylinder reservoir fluid level. The proper level is indicated by a step on the reservoir.
2. **CAUTION: Carefully clean the top and sides of the reservoir before opening to prevent contamination of the system with dirt, water and other foreign material. Remove the reservoir diaphragm when checking or adding fluid. Carefully replace the diaphragm, cover gasket and cover after filling.**

   Fill to the specified level with High Performance DOT 3 Brake Fluid C6AZ-19542-AA or equivalent DOT 3 fluid meeting Ford specification ESA-M6C25-A. Do not overfill. The upper portion of the reservoir must accept fluid that is displaced from the clutch slave cylinder as the clutch wears.
3. If the clutch master cylinder reservoir requires any fluid, check the hydraulic system components for leakage.
4. Inspect the clutch master cylinder (7A543) from the driver's side of the dash.

5 Check all tube connections. A slight wetting of the surfaces is acceptable

Official Licensed Product Ford Motor Company

ADJUSTMENTS (Continued)

6. Replace the component if excessive leakage is evident. The clutch slave cylinder can be inspected for leakage by removing the inspection plug in the clutch housing portion of case.
7. If the proper amount of fluid is found in the clutch master cylinder reservoir and no leaks are found, air may be present in the clutch hydraulic system. The clutch hydraulic system must be bled. Refer to appropriate clutch hydraulic system bleeding procedure in the Adjustments portion of this section.

   The fluid level in the clutch master cylinder reservoir will slowly increase or rise as the clutch disc wears. As long as the fluid level is visible at or above the stop in the translucent reservoir body, top-off is not necessary and should not be done, to prevent overflow and possible contamination of the fluid while it is exposed.

SPECIFICATIONS

CAUTION: Never reuse brake fluid that has been drained from the hydraulic system or has been allowed to stand in an open container for an extended period of time.

LUBRICANT/ADHESIVE/CLEANER SPECIFICATIONS

Description	Part Number	Ford Specification
High Performance DOT 3 Brake Fluid	C6AZ-19542-AA	ESA-M6C25-A and DOT 3
Premium Long-Life Grease	XG-1-C or -K	ESA-M1C75-B

TORQUE SPECIFICATIONS

Description	N·m	Lb-Ft	Lb-In
Clutch Master Cylinder Nuts	10-14	—	89-124
Brake Pedal and Bracket Assembly to "Y" Brace Bolts, M8-1.25 x 16	21-29	15-21	—
Bleed Screw	3-5	—	27-44
Clutch Pivot Shaft Nut	68-92	50-68	—
Clutch Slave Cylinder Bolt, 5.8L Engine Only	19-26	14-19	—

SPECIAL SERVICE TOOLS/EQUIPMENT

SPECIAL SERVICE TOOLS REQUIRED

Tool Number/ Description	Illustration
T88T-70522-A Clutch Coupling Tool	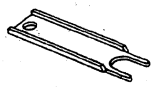 T88T-70522-A

Official Licensed Product Ford Motor Company

GROUP

FUEL SYSTEM 10

SECTION TITLE	PAGE
ACCELERATOR PEDAL AND LINKAGE	10-02-1
FUEL SYSTEM, SERVICE	10-00-1
FUEL TANK, FILTERS, TUBES AND FUEL PUMP, DIESEL ENGINE	10-01B-1
FUEL TANK, FILTERS, TUBES AND ELECTRIC FUEL PUMP, GASOLINE ENGINES	10-01A-1
SPEED CONTROL SYSTEM, ELECTRONIC	10-03-1

SECTION 10-00 Fuel System, Service

SUBJECT	PAGE
VEHICLE APPLICATION	10-00-1
DESCRIPTION AND OPERATION	
Fuel System Service	10-00-1
DIAGNOSIS AND TESTING	
Fuel System	10-00-1
CLEANING AND INSPECTION	
Engine Air Cleaner	10-00-2
CLEANING AND INSPECTION (Cont'd.)	
Fuel Pump, Electric	10-00-2
Idle Air Control (IAC) Valve	10-00-2
Throttle Body	10-00-2
ADJUSTMENTS	
Fuel System	10-00-2
SPECIFICATIONS	10-00-2

Official Licensed Reprint Ford Motor Company

VEHICLE APPLICATION

F-250 Heavy Duty, F-350 and F-Super Duty

DESCRIPTION AND OPERATION

Fuel System Service

The fuel system supply components are the most important components in the fuel system. The fuel charging components cannot operate efficiently unless each component in the fuel system functions correctly.

For testing and adjustment procedures, refer to the 1996 Powertrain Control / Emissions Diagnosis Manual.[1]

DIAGNOSIS AND TESTING

Fuel System

Refer to the 1996 Powertrain Control / Emissions Diagnosis Manual.[1]

1 Can be purchased as a separate item

CLEANING AND INSPECTION

Engine Air Cleaner

WARNING: DO NOT SMOKE OR CARRY LIGHTED TOBACCO OR OPEN FLAME OF ANY TYPE WHEN WORKING ON OR NEAR ANY FUEL-RELATED COMPONENT. HIGHLY FLAMMABLE MIXTURES ARE ALWAYS PRESENT AND CAN BE IGNITED, RESULTING IN POSSIBLE PERSONAL INJURY.

- Refer to the maintenance schedule booklet for the recommended engine air cleaner (ACL)(9600) maintenance mileage interval.
- Clean the air cleaner housing and the engine air cleaner cover (9661) with a solvent or compressed air. Wipe the air cleaner housing and engine air cleaner cover dry if a solvent is used. Inspect the air cleaner housing and engine air cleaner cover for distortion or damage at the gasket mating surfaces. Replace engine air cleaner cover or housing if they are damaged beyond service.

Air Cleaner Element

- Cleaning the air cleaner element is not recommended. The air cleaner element should be replaced at the specified mileage intervals.
- Hold air cleaner element in front of a light and carefully inspect it for any splits or cracks. If air cleaner element is split or cracked, replace it.

Idle Air Control (IAC) Valve

The idle air control valve (IAC valve)(9F715) on the 5.8L and 7.5L engines is of a sludge-resistant design and should not be cleaned; damage can occur.

Official Licensed Product
Ford Motor Company

Throttle Body

The throttle body (9E926) is of a sludge-resistant design and should not be cleaned; damage can occur.

Fuel Pump, Electric

Refer to the 1996 Powertrain Control / Emissions Diagnosis Manual.[2]

ADJUSTMENTS

Fuel System

Refer to the 1996 Powertrain Control / Emissions Diagnosis Manual.[2]

SPECIFICATIONS

FUEL PRESSURE SPECIFICATIONS

Engine Condition	5.8L	7.3L	7.5L
Engine Running	28-45 psi 193-310 kPa	41-55 psi 283-379 kPa	28-45 psi 193-310 kPa
Key ON Engine OFF	35-45 psi 240-310 kPa	—	35-45 psi 240-310 kPa

2 Can be purchased as a separate item.

SECTION 10-01A Fuel Tank, Filters, Tubes and Electric Fuel Pump, Gasoline Engines

SUBJECT	PAGE
VEHICLE APPLICATION	10-01A-1
DESCRIPTION AND OPERATION	
Fuel Filter, In-Line	10-01A-2
Fuel Filter, Fuel Injector Screen	10-01A-2
Fuel Filter, In-Tank	10-01A-2
Fuel Gauge	10-01A-11
Fuel Injected Engines	10-01A-1
Fuel Pressure Regulator	10-01A-11
Fuel Pump	10-01A-9
Fuel Tank and Fuel Tank Filler Pipe	10-01A-2
Fuel Tank Filler Cap	10-01A-2
Fuel Tank Sending Unit	10-01A-11
Fuel Tubes	10-01A-2
Push Connect Fitting	10-01A-3
Spring Lock Coupling	10-01A-3
Inertia Fuel Shutoff (IFS) Switch	10-01A-11
DIAGNOSIS AND TESTING	
Fuel Tank, Filters, Tubes and Electric Fuel Pump	10-01A-11
REMOVAL AND INSTALLATION	
Fuel and Vapor Return Tubes	10-01A-26
Fuel Draining	10-01A-11
Fuel Filling	10-01A-11
Fuel Filter, In-Line	10-01A-23
Fuel Filter, In-Tank	10-01A-22

SUBJECT	PAGE
REMOVAL AND INSTALLATION (Cont'd.)	
Fuel Pressure Regulator	10-01A-29
Fuel Tank Filler Pipe, F-250 Heavy Duty and F-350	10-01A-19
Fuel Tank Sending Unit and Pump	10-01A-24
Fuel Tank Sending Unit and Pump, Units with Plastic Locking Ring, F-350 Chassis Cab	10-01A-25
Fuel Tank Support Straps	10-01A-19
Fuel Tank, Aft-of-Axle, F-250 Heavy Duty, F-350 and F-Super Duty	10-01A-15
Fuel Tank, Steel Midship	10-01A-11
Fuel Tube Retainer	10-01A-28
Fuel Vapor Valve	10-01A-25
Push Connect Fittings, Steel	10-01A-26
Spring Lock Coupling	10-01A-27
CLEANING AND INSPECTION	
Fuel Tanks	10-01A-29
SERVICE PROCEDURES	
Fuel System — Pressurized	10-01A-29
Fuel Tubes, Steel	10-01A-29
Fuel System Pressure Relief	10-01A-29
Push Connect Tube Ends, Steel	10-01A-30
SPECIFICATIONS	10-01A-30
SPECIAL SERVICE TOOLS/EQUIPMENT	10-01A-32

Ford Motor Company

VEHICLE APPLICATION

F-250 Heavy Duty, F-350 and F-Super Duty

DESCRIPTION AND OPERATION

Fuel Injected Engines

WARNING: THE TANK-TO-INJECTOR FUEL INJECTION SUPPLY MANIFOLD REMAINS UNDER HIGH PRESSURE AFTER THE SYSTEM IS SHUT OFF. DEPRESSURIZE THE FUEL INJECTION SUPPLY MANIFOLD AT THE SCHRADER VALVE LOCATED ON THE ENGINE FUEL INJECTION SUPPLY MANIFOLD RAIL BEFORE DISCONNECTING ANY FUEL TUBE. DISCONNECTING FUEL TUBES WITHOUT DEPRESSURIZING THE SYSTEM AS DESCRIBED IN THIS SECTION CAN RESULT IN INJURY FROM FUEL BEING SPRAYED UNDER PRESSURE. ALSO, FUEL SPRAYED UNDER PRESSURE IS AN OBVIOUS FIRE HAZARD.

F-Series vehicles are equipped with multiport fuel injection (MFI) engines (6007). Separate electronically controlled fuel injectors (9F593) are mounted in the intake manifold (9424) on the runner for each cylinder. Each fuel injector is mounted so that it sprays fuel into the cylinder head intake port of its cylinder. The fuel injectors are supplied fuel under high pressure through an engine-mounted fuel injection supply manifold (9F792), which also has a fuel pressure regulator (9C968). The fuel pressure regulator controls the pressure of fuel going into the fuel injectors and returns excess fuel to the fuel tanks (9002).

For a description of the operation of the fuel injectors and fuel injection supply manifold, refer to Section 03-04A for 5.8L engine, or Section 03-04B for 7.5L engine.

On all vehicles, a fuel pump (9350) located in a fuel delivery module (FDM) in the fuel tank supplies fuel under high pressure to the fuel injection supply manifold.

All vehicles have an in-line fuel filter (9155) mounted on the frame rail under the vehicle.

DESCRIPTION AND OPERATION (Continued)

Fuel Tank and Fuel Tank Filler Pipe

All vehicles are equipped with a restricted opening on the fuel tank filler pipes (9034) that allows only a non-leaded fuel nozzle to be inserted.

The fuel tank filler pipe openings for the fuel tanks (9002) on vehicles with multiport fuel injection (MFI) engines (6007) have been made smaller to prevent accidental filling with other than unleaded fuel. Gasoline pumps in the United States and Canada dispensing unleaded fuel are equipped with nozzles to accommodate the smaller filler opening on the fuel tank filler pipe.

The restrictor in the fuel tank filler pipe consists of a narrow opening in the fuel tank filler pipe covered by a spring steel trap door. The smaller non-leaded fuel nozzle will fit through the narrow opening and push the trap door aside, allowing normal filling. Leaded fuel nozzles will not fit through the narrow opening. The trap door being closed causes a fuel backup and automatic nozzle shutoff.

The restricted fuel tank filler pipe is manufactured as an assembly, and must be serviced by removal and replacement with a new part. Fuel tank filler pipes are not to be modified in any way.

The fill limiting system is designed to permit an approximate 10-12 percent tank volume air space when the fuel tank is filled to capacity. This air space provides for thermal expansion of fuel and acts as an aid to the in-tank vapor vent system.

Expansion of fuel due to temperature increases or overfilling ("topping off") causes fuel overflow at the fuel tank filler cap (9030) when the vehicle is standing or the fuel tank filler cap is removed. To minimize this condition, it is recommended that the amount of fuel put in the fuel tank when filling be limited to the automatic pump shutoff. If vehicle has two fuel tanks, use fuel from both fuel tanks after fill-up to reduce fuel levels.

Fuel Tank Filler Cap

Refer to Section 03-13.

Fuel Filter, In-Line

The in-line fuel filter (9155) provides filtration to protect the small metering orifices of the fuel injector nozzles. The fuel filter assembly is located on the left frame rail.

NOTE: The fuel filter must be changed at 24,000 km (15,000 miles) or 15-month intervals, and each time a fuel tank sending unit and pump is replaced. When the fuel filter needs to be replaced, proceed to Fuel Filter, In-Line in the Removal and Installation portion of this section.

If the fuel sending unit and pump is replaced, or the fuel system is contaminated with particles, the fuel filter must be replaced. If contamination of fuel is suspected, refill fuel tank (9002) with clean fuel, not fuel from fuel tanks.

Fuel Filter, In-Tank

An in-tank fuel filter is located on the inlet of the venturi pump. The inlet of the venturi pump has a nylon filter on it to prevent dirt and other particulate matter from entering the system. Water in the fuel tank can pass through the filter without restriction.

Fuel Filter, Fuel Injector Screen

An injector filter is located at the top of each injector and is not serviceable. If injector screen becomes clogged, replace the complete injector assembly. Refer to Section 03-04A and Section 03-04B for fuel injector information.

Fuel Tubes

Fuel tubes on all F-Series vehicles are steel and Teflon® with braided covering, and use one of two types of quick-connect couplings. Some tubes on vehicles are part of an organizer assembly.

The two types of quick-connect couplings are called push connect fittings and metal spring lock connectors.

Ford Motor Company

DESCRIPTION AND OPERATION (Continued)

Spring Lock Coupling

Spring lock fittings have a bead formed in one tube that is retained by a garter spring inside a cage on the other tube. Sealing is by O-rings on the cage side. These couplings are connected by pushing the two sides together until the garter spring clicks. They are disconnected by the use of special tools. Connecting and disconnecting instructions are in the Removal and Installation portion of this section. This type of connector is used for fuel tube-to-engine fuel manifold connections and sometimes for fuel filter connections.

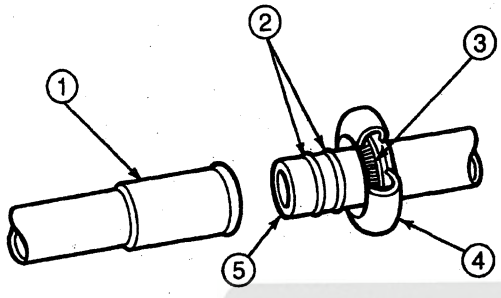

SPRING LOCK COUPLING DISCONNECTED
A16216-B

Item	Part Number	Description
1	—	Female Fitting (Part of 9J338)
2	—	O-Rings (Part of 19D690)
3	—	Garter Spring (Part of 9J338)
4	—	Cage (Part of 9J338)

(Continued)

Item	Part Number	Description
5	—	Male Fittings (Part of 9J338)

A tether is used for additional protection on spring lock connectors. It must be unclipped before disconnecting.

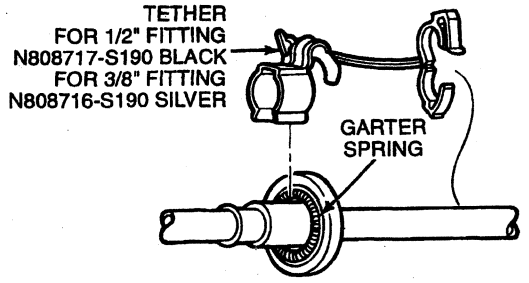

REMOVED

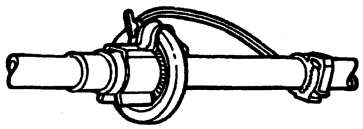

INSTALLED

A16217-B

Push Connect Fitting

Push connect fittings consist of a tube (with a formed bead), a body, O-rings, retainer and safety retaining clip (redundant). The fittings are disconnected and connected by use of special tools. Instructions are in the Removal and Installation portion of this section.

Official Licensed Product Ford Motor Company

DESCRIPTION AND OPERATION (Continued)

Fuel Tubes, F-250 Heavy Duty, F-350 Regular Cab and SuperCab, and F-Super Duty Chassis Cab with Dual and Aft-of-Axle Tanks

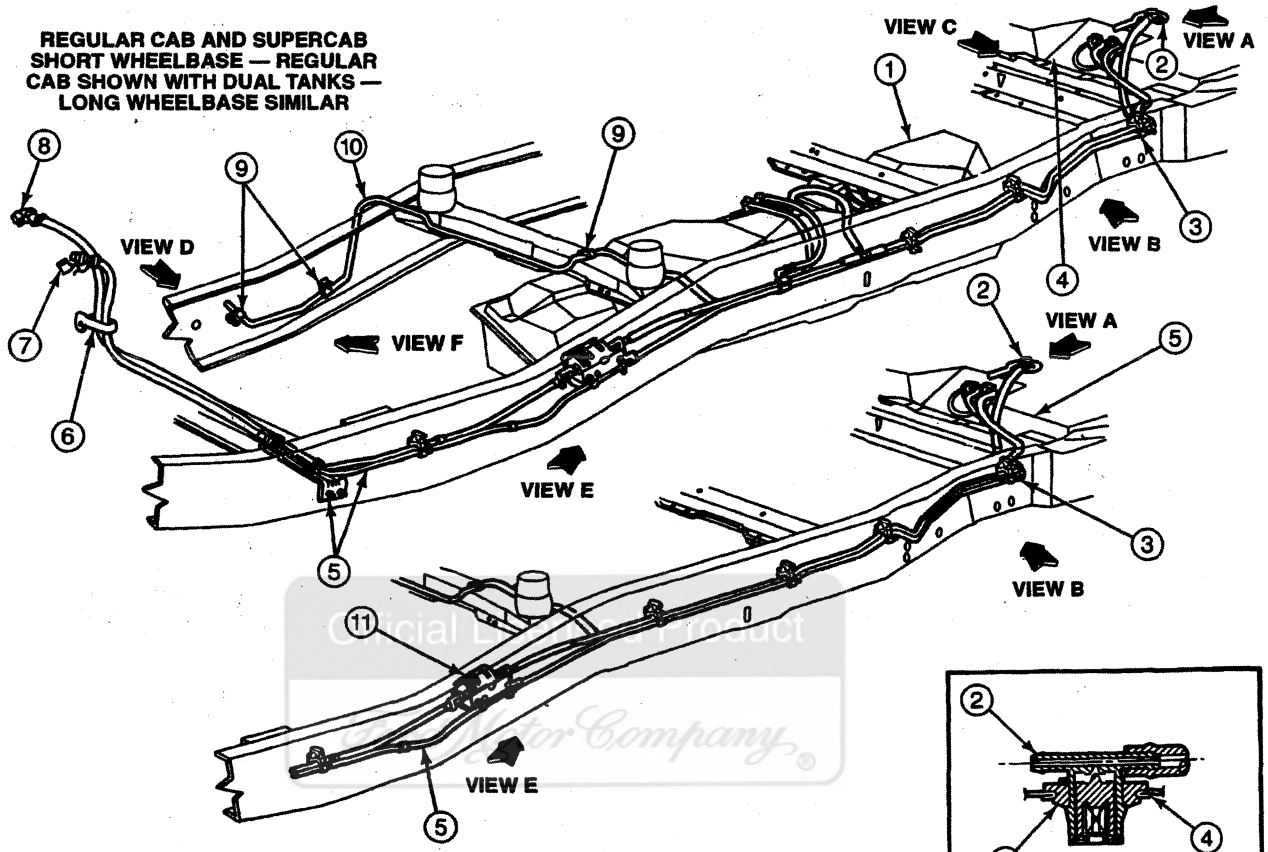

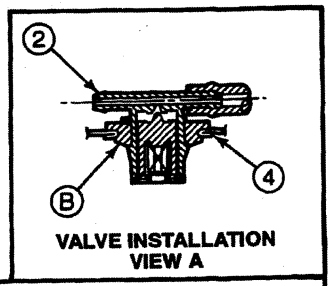

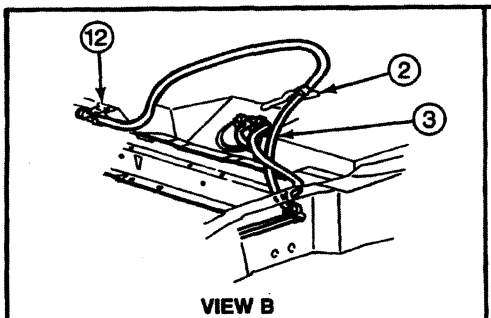

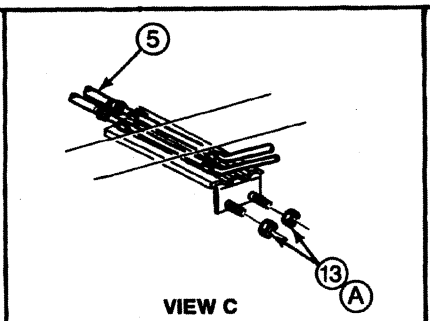

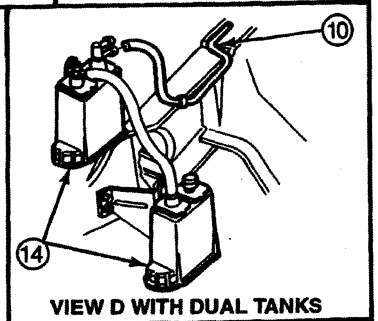

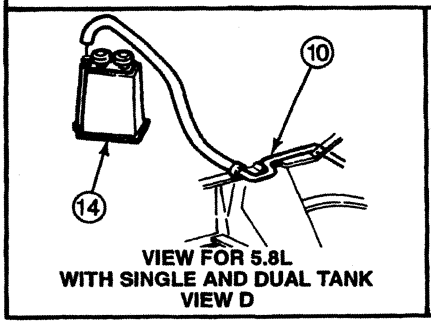

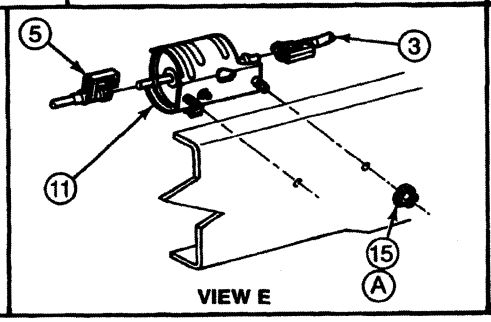

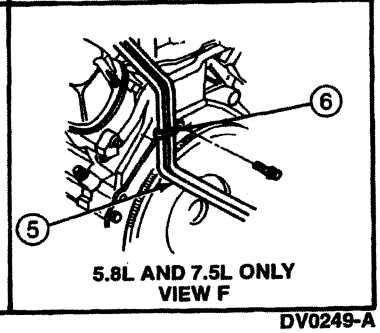

DV0249-A

DESCRIPTION AND OPERATION (Continued)

Item	Part Number	Description
1	9002	Fuel Tank
2	9B227	Evaporative Valve and Hose
3	9S278	Rear Fuel Tube
4	9104	Fuel Tank, Aft-of-Axle
5	9J338	Front Fuel Tube
6	9D319	Fuel Tube Support Bracket
7	N808716-S190	Fuel Tube Supply Connector
8	N808717-S190	Fuel Tube Return Connector
9	9F274	Fuel Tube Clip

(Continued)

Item	Part Number	Description
10	9C016	Vapor Return Tube and Hose
11	9A335	Fuel Filter Bracket
12	370443-S32	Clip
13	N620480-S2	Nut
14	9D653	Fuel Vapor Canister
15	N620480-S2	Nut
A	—	Tighten to 8-10 N·m (71-89 Lb-In)
B	—	Valve Must Be Installed As Shown

Official Licensed Product
Ford Motor Company

DESCRIPTION AND OPERATION (Continued)

Fuel Tubes, F-350 and F-Super Duty Chassis Cab with Single and Dual Tanks

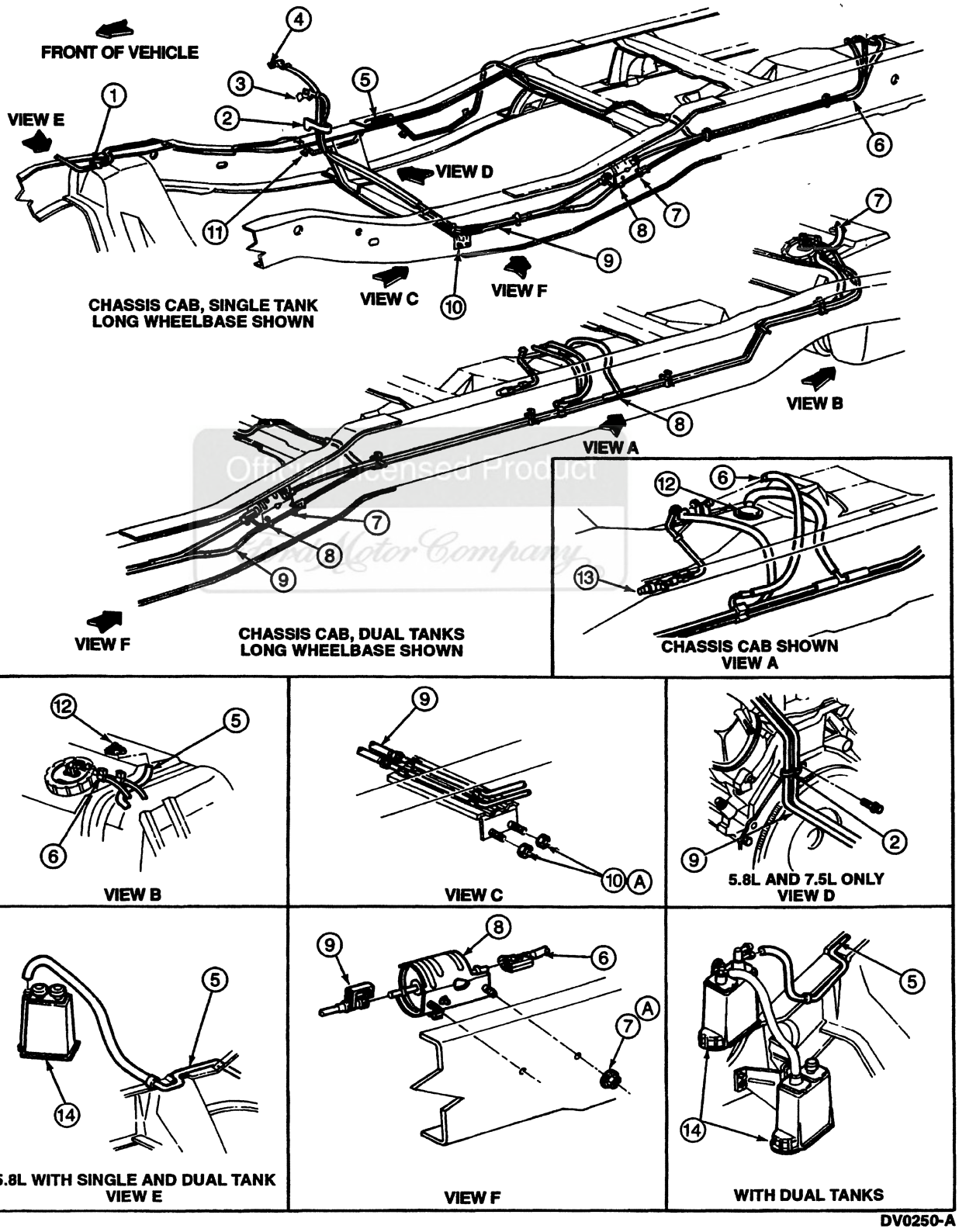

DESCRIPTION AND OPERATION (Continued)

Item	Part Number	Description
1	9F274	Fuel Tube Clip
2	9D319	Fuel Tube Support Bracket
3	N808716-S190	Fuel Tube Return Connector
4	N808717-S190	Fuel Tube Supply Connector
5	9C016	Vapor Return Tube and Hose
6	9S278	Rear Fuel Tube
7	N620480-S2	Nut
8	9A335	Fuel Filter Bracket

(Continued)

Item	Part Number	Description
9	9J338	Front Fuel Tube
10	N620480-S2	Nut
11	370443-S32	Clip
12	9B227	Evaporative Valve and Hose
13	9S303	Fuel Tank Auxiliary Drain Tube
14	9D653	Fuel Vapor Canister
A	—	Tighten to 8-10 N·m (71-89 Lb-In)

Official Licensed Product
Ford Motor Company

DESCRIPTION AND OPERATION (Continued)

Fuel Tubes, F-Super Duty Motorhome Chassis

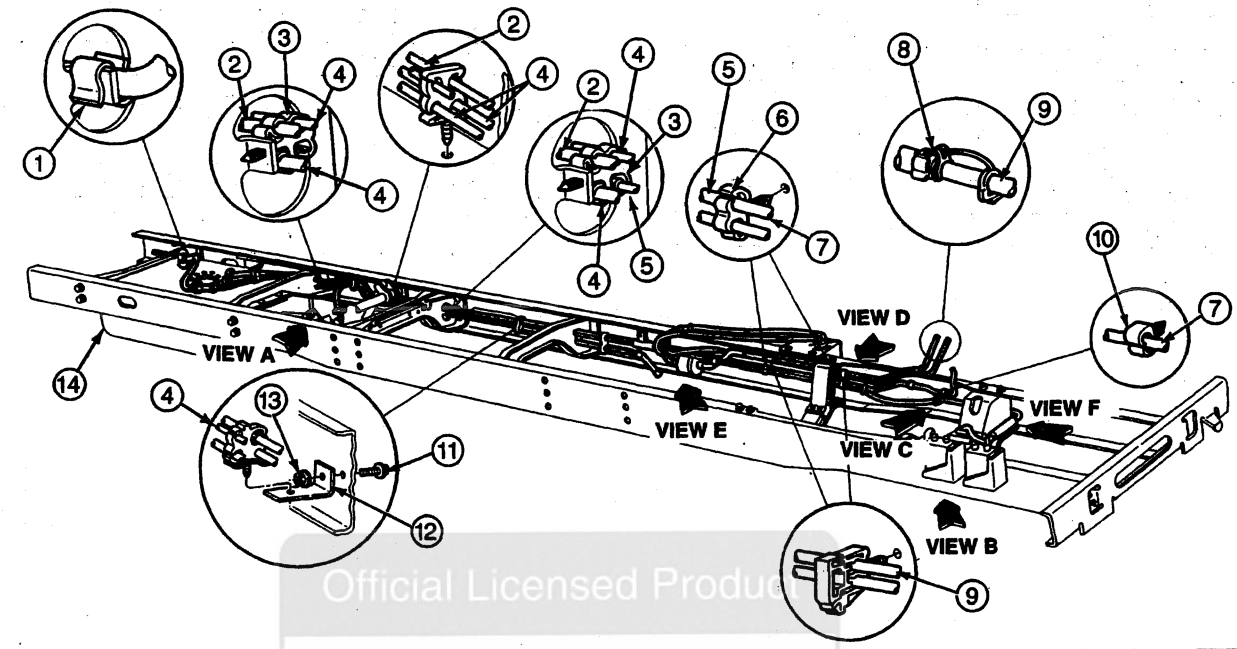

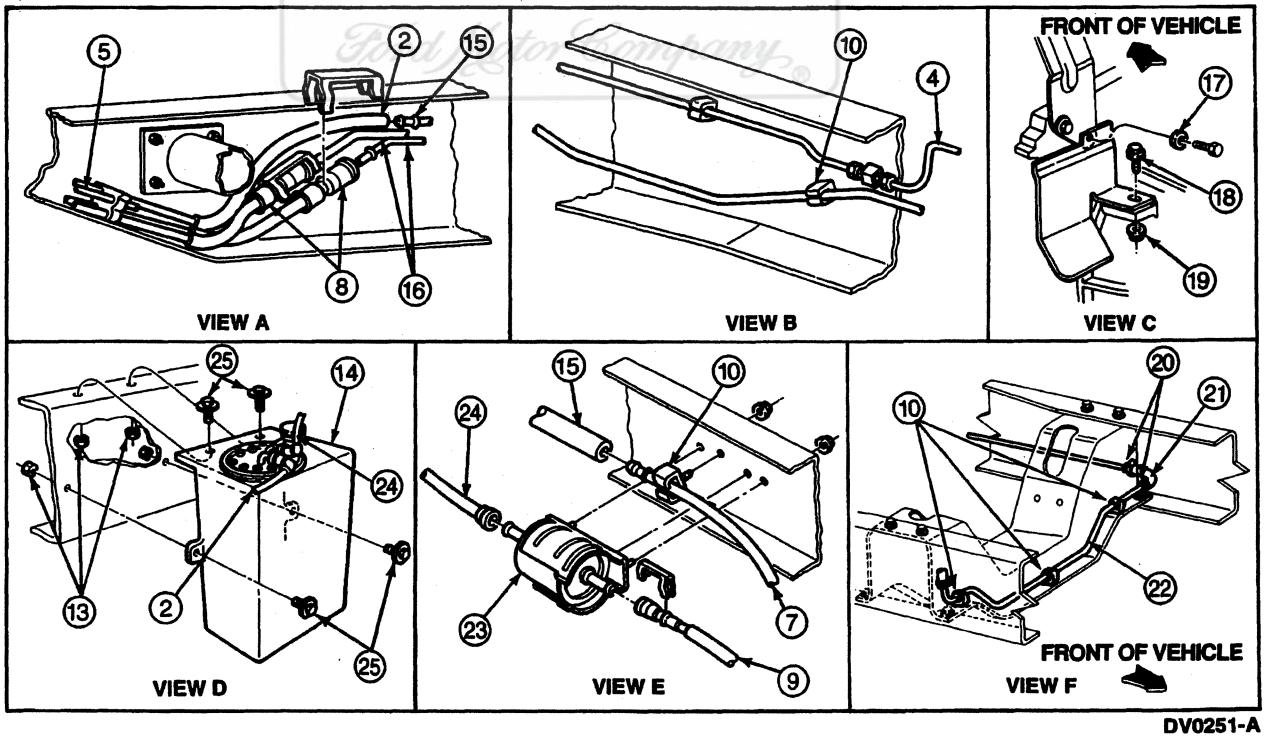

DV0251-A

Item	Part Number	Description
1	370443-S32	Push-On Clip
2	9G291	Rear Fuel Vapor Return Tube

(Continued)

Item	Part Number	Description
3	9A317	Fuel Tube Clip
4	9J337	Rear Fuel Supply and Return Tube

(Continued)

DESCRIPTION AND OPERATION (Continued)

Item	Part Number	Description
5	2269	Brake Tube
6	N802769-S	Clip, Double
7	9291	Fuel Tube
8	N808716-S190	Retainer with Tether
9	9J338	Fuel Rail Tube
10	N802768-S	Clip, Single
11	N605895-S2	Bolt
12	9K337	Fuel Tube Clip Support Bracket
13	N620480-S2	Nut
14	9002	Fuel Tank

(Continued)

Item	Part Number	Description
15	9B033	Fuel Vapor Tube
16	9H334	Dual Fuel Supply and Return Tube
17	44878	Washer
18	N802826-S	Screw
19	N620482-S2	Nut
20	383521-S	Clamp
21	381114	Hose, 3/8-Inch
22	9H336	Front Fuel Tube and Hose
23	9A335	Fuel Filter Bracket
24	9B273	Fuel Filter to Fuel Pump Tube
25	N606678	Bolt

Fuel Pump

The electric fuel delivery system used on the 5.8L and 7.5L multiport fuel injection (MFI) engines (6007) consists of a fuel delivery module (FDM) and sending unit. The fuel delivery module includes a high-pressure fuel pump (9350), venturi jet pump, supply check valve, and a return flow shuttle valve.

Licensed Product
Ford Motor Company

Fuel Pump Assembly

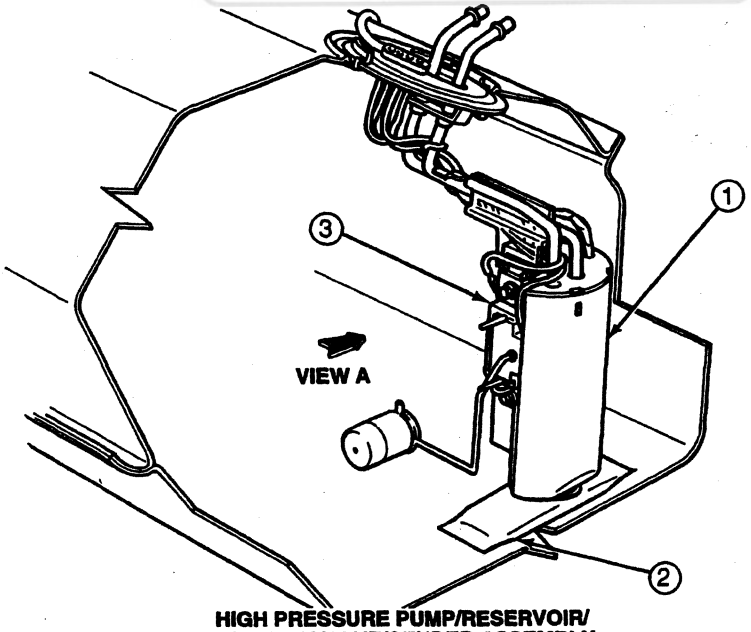

HIGH PRESSURE PUMP/RESERVOIR/ SHUTTLE VALVE/SENDER ASSEMBLY

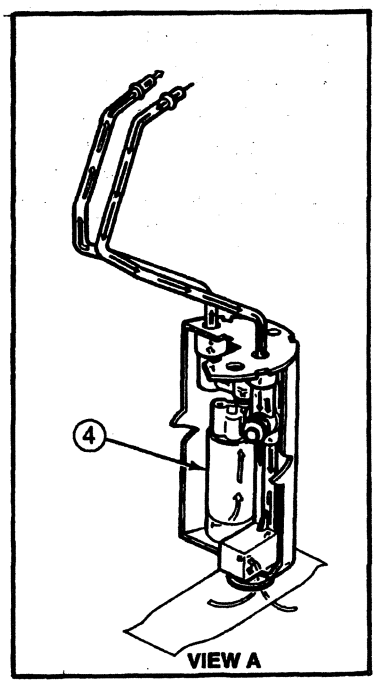

DV0312-A

DESCRIPTION AND OPERATION (Continued)

Item	Part Number	Description
1	—	Fuel Delivery Module (Part of 9H307)
2	—	In-Tank Venturi Filter (Part of 9H307)
3	9A299	Resistor Assy (Part of 9H307)
4	—	High-Pressure Pump (Part of 9H307)

(Continued)

The following provides a brief description and function of each of the fuel delivery module internal components.

The high-pressure fuel pump is located inside the module.

The return shuttle valve opens the return tube to the tank and the return flow is directed to the appropriate tank on vehicles equipped with dual tanks.

The supply check valve, which is normally closed, opens when the supply pressure from the energized pump exceeds the opposing check valve spring force. When the pump is de-energized (that is, when the engine is shut off), the supply check valve closes to maintain pump prime and fuel supply tube pressure.

A portion of the high-pressure flow from the fuel pump is diverted to operate the venturi jet pump. The venturi-type fuel pump draws fuel from the fuel tank (9002) into the fuel delivery module reservoir to augment the engine return flow. This process ensures an adequate fuel supply to the fuel pump during extreme vehicle maneuvers and steep vehicle position with low-tank fuel levels.

The inlet of the venturi pump has a nylon filter to prevent dirt and other particulate matter from entering the system. Water in the fuel tank can pass through the filter without restriction.

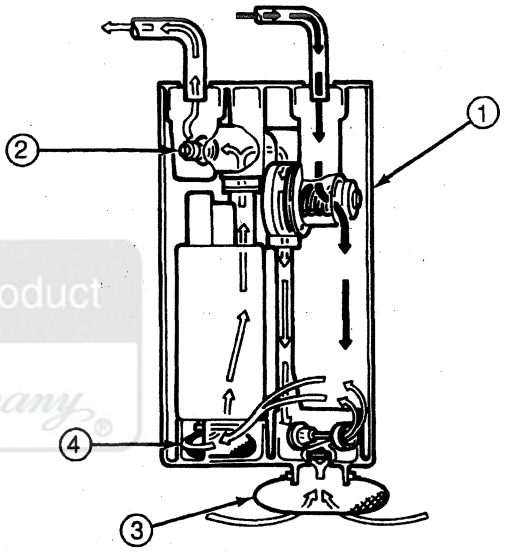

DV0313-A

Item	Part Number	Description
1	—	Fuel Delivery Module (Part of 9H307)
2	—	Supply Check Valve (Part of 9H307)
3	—	Venturi Filter Screen (Part of 9H307)
4	—	Pump Filter Screen (Part of 9H307)

The in-tank mounted fuel delivery module containing the fuel pump is capable of supplying 105 liters (27.7 gallons) of fuel per hour at a working pressure of 270.0 kPa (39 psi). The fuel pump has an internal pressure relief valve to provide over-pressure protection in the event the fuel flow becomes restricted. Over-pressure is restricted to 850 kPa (123 psi) and reduced fuel flow will result. The system pressure is controlled by a fuel pressure regulator (9C968) on the engine.

Unofficial Licensed Product Ford Motor Company

DESCRIPTION AND OPERATION (Continued)

Fuel Pressure Regulator

Refer to Section 03-04A or Section 03-04B.

Fuel Gauge

Refer to Section 13-01 in the Body, Chassis Manual.

Fuel Tank Sending Unit

When the ignition switch (11572) is turned to the ON position, the relay is energized and provides power to both the fuel pump relay and a timing device in the powertrain control module (PCM)(12A650). Fuel pump power is provided through the contacts of the fuel pump relay and the inertia fuel shutoff switch. If the ignition switch is not turned to the START position within approximately one second, the timing device in the powertrain control module will open the ground circuit to the fuel pump relay. Opening the ground circuit de-energizes the fuel pump relay (opening its contacts), which de-energizes the fuel pumps. This circuitry pressurizes the fuel system.

When the ignition switch is turned to the START position, the powertrain control module energizes the fuel pump relay to provide fuel while cranking.

After the engine (6007) starts, the ignition switch is returned to the RUN position, and power to the fuel tank sending unit and pump is supplied through the fuel pump relay. The powertrain control module senses speed and shuts off the fuel pump by opening the ground circuit to the fuel pump relay if the engine stops or engine speed drops below 120 rpm.

Inertia Fuel Shutoff (IFS) Switch

WARNING: IF YOU SEE OR SMELL GASOLINE AT ANY TIME OTHER THAN DURING FUELING, DO NOT RESET THE INERTIA FUEL SHUTOFF SWITCH.

CAUTION: Do not reset the inertia fuel shutoff switch until the complete fuel system has been inspected for leaks.

In the event of a collision, the electrical contacts in the inertia fuel shutoff switch open and the fuel pump (9350) automatically shuts off. The fuel pump will shut off even if the engine (6007) does not stop running. The engine, however, will stop a few seconds after the fuel pump stops. It is not possible to restart the engine until the inertia fuel shutoff switch is manually reset.

To reset the inertia fuel shutoff switch, depress the button on top of the inertia fuel shutoff switch.

Switch Location

The inertia fuel shutoff switch is on the right cowl panel just forward of the door below the instrument panel.

DIAGNOSIS AND TESTING

Fuel Tank, Filters, Tubes and Electric Fuel Pump

Refer to the 1996 Powertrain Control/Emissions Diagnosis Manual.[1]

REMOVAL AND INSTALLATION

Fuel Draining

Use appropriate adapter to connect Rotunda Fuel Storage Tanker 164-R3201 or equivalent suction pump to the fuel hose (at the fuel pump to fuel tube connection) and drain the fuel tank (9002).

Fuel Filling

The fuel tank filler pipe (9034) openings for the fuel tanks (9002) on trucks with multiport fuel injection (MFI) engines (6007) have been made smaller to prevent accidental filling with other than unleaded fuel. Gasoline pumps in the United States and Canada dispensing unleaded fuel are equipped with nozzles to accommodate the smaller filler opening on the filler neck.

Expansion of fuel due to temperature increases, or overfilling ("topping off") causes fuel overflow at the fuel tank filler cap (9030) when the vehicle is standing or the fuel tank filler cap is removed. To minimize this condition, it is recommended that the amount of fuel put in the fuel tank when filling be limited to the automatic pump shutoff. If vehicle has two fuel tanks, use fuel from both fuel tanks after fill-up to reduce fuel levels.

Fuel Tank, Steel Midship

NOTE: There are different midship fuel tanks (9002) that are removed and installed essentially the same way. Follow steps and refer to appropriate illustration for details.

Removal

1. Disconnect battery ground cable (14301).
2. Using Rotunda Fuel Storage Tanker 164-R3201 or equivalent, drain fuel tank. Drain both fuel tanks on dual-tank vehicles.
3. Raise vehicle on hoist.
4. If equipped with skid plate, remove fasteners and remove skid plate assembly.
5. Loosen clamps and disconnect fuel tank filler pipe (9034) and vent hose at fuel tank.
6. Position suitable jack under fuel tank.
7. Remove nuts and bolts and lower fuel tank support straps (9092). If necessary, turn fuel tank support strap approximately 30 degrees and remove.

1 Can be purchased as a separate item.

REMOVAL AND INSTALLATION (Continued)

8. Lower fuel tank enough to gain access to fuel connections.
9. Disconnect electrical connector from fuel tank sending unit and pump.
10. Disconnect fuel vapor hose(s) from port valve(s). If so equipped, remove vent hose from clip on frame (5005).
11. Disconnect fuel supply and return tubes.
12. Remove fuel tank from vehicle.

Installation

1. NOTE: When the battery (10655) has been disconnected and reconnected, some abnormal drive symptoms may occur while the powertrain control module (PCM)(12A650) relearns its adaptive strategy. The vehicle may need to be driven 16 km (10 miles) or more to relearn the strategy.

   Follow removal procedure in reverse order.
2. Use an adhesive such as Gasket and Trim Adhesive D7AZ-19B508-B or equivalent meeting Ford specification ESR-M11P17-A or ESE-M2G52-A to attach insulators to straps and frame supports.
3. Tighten fasteners to specifications.

Midship Fuel Tank Installation, F-250 Heavy Duty, F-350 and F-Super Duty Chassis Cab

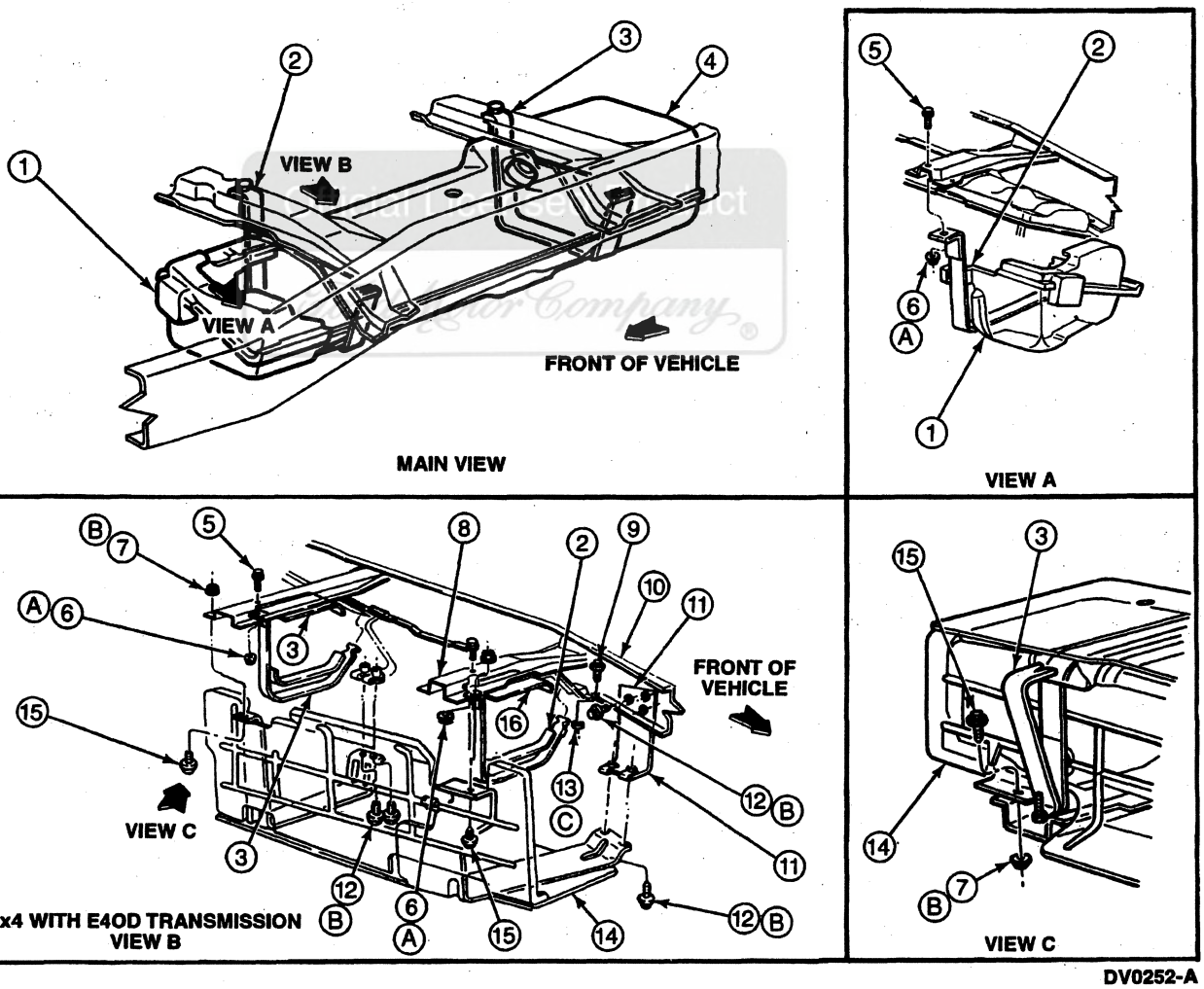

DV0252-A

REMOVAL AND INSTALLATION (Continued)

Item	Part Number	Description
1	9K014	Shield Assy
2	9092	Fuel Tank Support Straps, Front
3	9057	Fuel Tank Support Strap, Rear
4	9002	Fuel Tank
5	N802253-S2	Bolt
6	N620481-S	Nut
7	N620481-S2	Nut
8	9061	Crossmember
9	N605919-S2	Bolt
10	5005	Frame

(Continued)

Item	Part Number	Description
11	9C038	Bracket
12	N605906-S2	Bolt
13	N620482-S56	Nut
14	9A147	Skid Plate Heat Shield
15	N605906-S20	Bolt
16	9240	Insulator, Upper
A	—	Tighten to 30-40 N·m (22-30 Lb-Ft)
B	—	Tighten to 16-24 N·m (12-18 Lb-Ft)
C	—	Tighten to 34-46 N·m (25-34 Lb-Ft)

Official Licensed Product
Ford Motor Company

REMOVAL AND INSTALLATION (Continued)

Midship Fuel Tank Installation, F-250 Heavy Duty, F-350 and F-Super Duty Chassis Cab

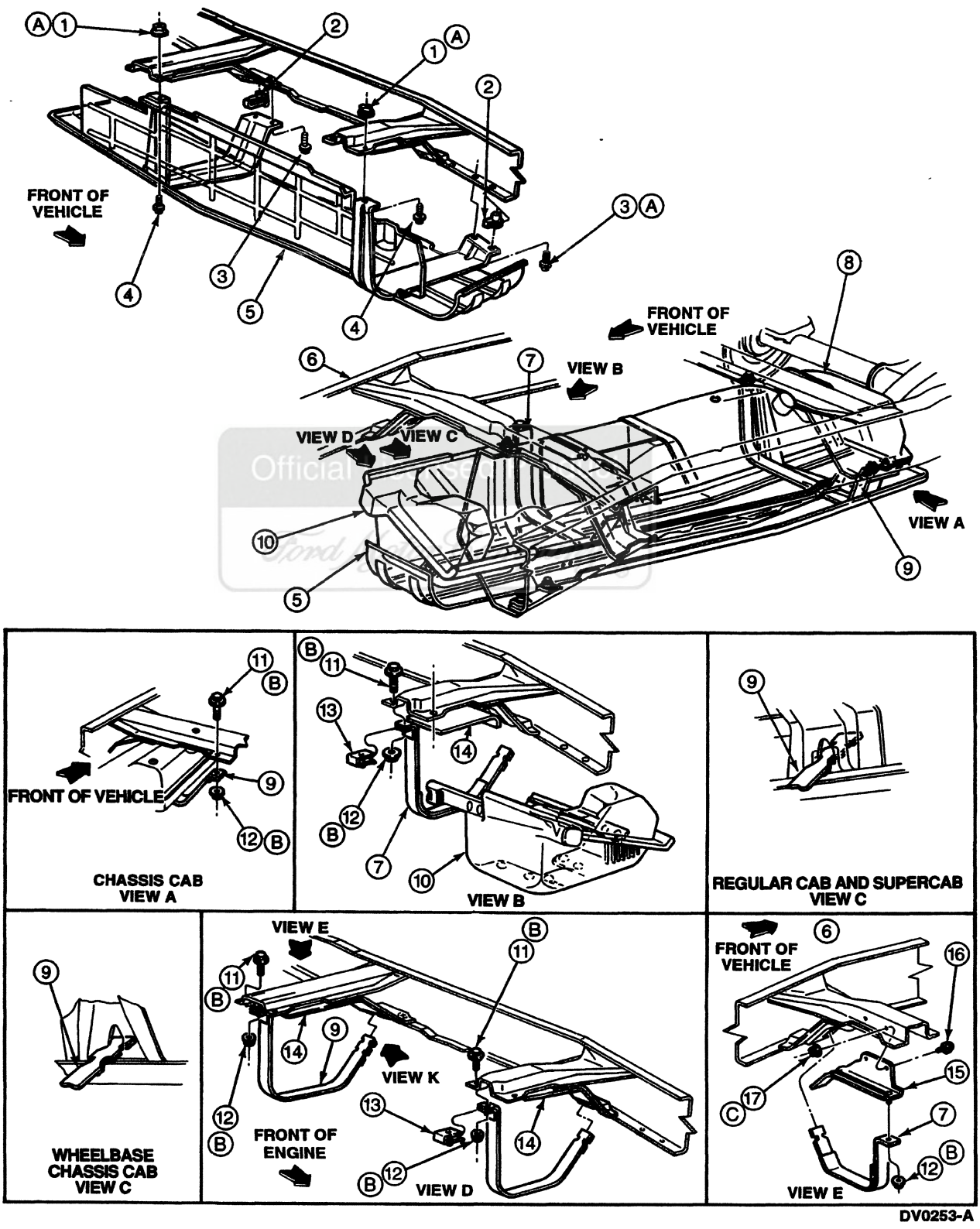

REMOVAL AND INSTALLATION (Continued)

Item	Part Number	Description
1	N620481-S2	Nut
2	N804340-S2	U-Nut
3	N605906-S2	Bolt
4	N605906-S2	Bolt
5	9A148	Skid Plate
6	5005	Frame
7	9092	Fuel Tank Support Strap, Front
8	9002	Fuel Tank
9	9092	Fuel Tank Support Strap, Rear
10	9K014	Shield

(Continued)

Item	Part Number	Description
11	N802253-S2	Bolt
12	N620482-S2	Nut
13	N801107-S100	U-Nut
14	9240	Insulator, Upper
15	9065	Bracket
16	N605906-S2	Bolt
17	N620481-S2	Nut
A	—	Tighten to 16-24 N·m (12-18 Lb-Ft)
B	—	Tighten to 30-40 N·m (22-30 Lb-Ft)
C	—	Tighten to 22-28 N·m (16-21 Lb-Ft)

Fuel Tank, Aft-of-Axle, F-250 Heavy Duty, F-350 and F-Super Duty

Removal

CAUTION: Make sure the fuel tubes do not become kinked when installing the fuel tank (9002).

1. Raise the rear of the vehicle.
2. To avoid electrical sparking at the fuel tank, disconnect battery ground cable (14301). Then disconnect the connector from fuel tank sending unit and pump near the fuel tank.
3. Using Rotunda Fuel Storage Tanker 164-R3201 or equivalent, drain fuel tank. Drain both fuel tanks on dual tank vehicles.
4. Disconnect the fuel tube push connect fittings at the fuel tank sending unit and pump.
5. Loosen the clamp on the fuel tank filler pipe (9034). Disconnect the fuel tank filler pipe by pulling along the rubber inner tube from the filler neck.
6. If removing the metal-type fuel tank, support the fuel tank and remove the bolts retaining the fuel tank support strap (9092) to the frame (5005). Carefully lower the fuel tank and disconnect the vent tube(s) from the vapor emission control valve in the top of the fuel tank. Finish removing the fuel tank filler pipe and fuel tank filler pipe vent hose if not possible in Step 5. Remove the fuel tank from under the vehicle.
7. If removing the plastic-type fuel tank, support the fuel tank and remove the bolts retaining the combination skid plate and tank support to the frame. Carefully lower the fuel tank and disconnect the vent tube(s) from the vapor emission control valve in the top of the fuel tank. Complete removing the fuel tank filler pipe if not possible in Step 5. Remove the skid plate and fuel tank from under the vehicle. Disassemble the skid plate from the tank.

Installation

1. NOTE: When the battery (10655) has been disconnected and reconnected, some abnormal drive symptoms may occur while the powertrain control module (PCM)(12A650) relearns its adaptive strategy. The vehicle may need to be driven 16 km (10 miles) or more to relearn the strategy.

   Follow removal procedure in reverse order.
2. **CAUTION: The frame crossmember in front of the tank is narrower at the center to provide clearance for the fuel tubes. Be sure the tubes cross this portion of the crossmember on reinstallation to prevent damage to the tubes and restriction of fuel flow.**

   Grasp the three hoses about 300 mm (12 inches) forward of the crossmember. Hold the hoses taut while installing the fuel tank. This will prevent the fuel tubes from becoming kinked, which will cause restricted fuel flow.
3. Use a thread adhesive (such as Loctite® or equivalent) on metal fuel tank retaining nuts and bolts. Tighten all fasteners to specifications.

Official Licensed Product Ford Motor Company

REMOVAL AND INSTALLATION (Continued)

Steel Aft-of-Axle Tank Installation, F-250 Heavy Duty and F-350

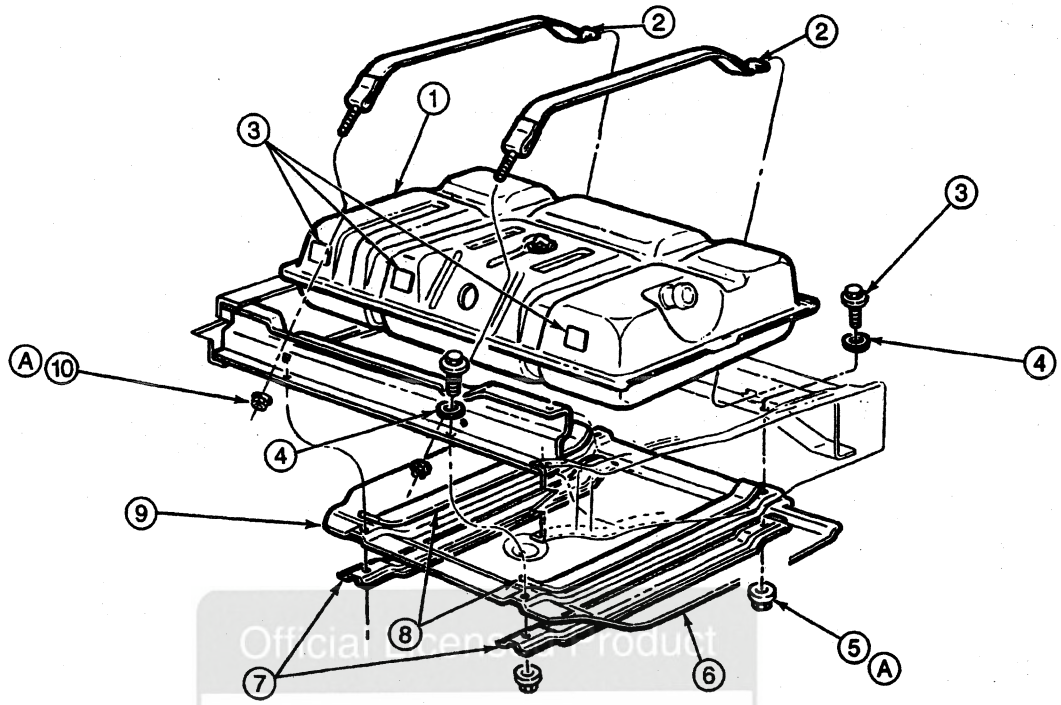

V3201-M

Item	Part Number	Description
1	9002	Fuel Tank
2	9092	Fuel Tank Support Strap
3	N801380-S100	Bolt
4	382873-S2	Washer
5	N620482-S2	Nut
6	9C045	Stone Shield (LH)

(Continued)

Item	Part Number	Description
7	9053	Fuel Tank Support
8	9240	Insulator
9	9K015	Stone Shield (RH)
10	34976-S362	Nut
A	—	Tighten to 34-46 N·m (25-34 Lb-Ft)

Official Ford Product
Ford Motor Company

REMOVAL AND INSTALLATION (Continued)

Plastic Aft-of-Axle Tank Installation, F-350

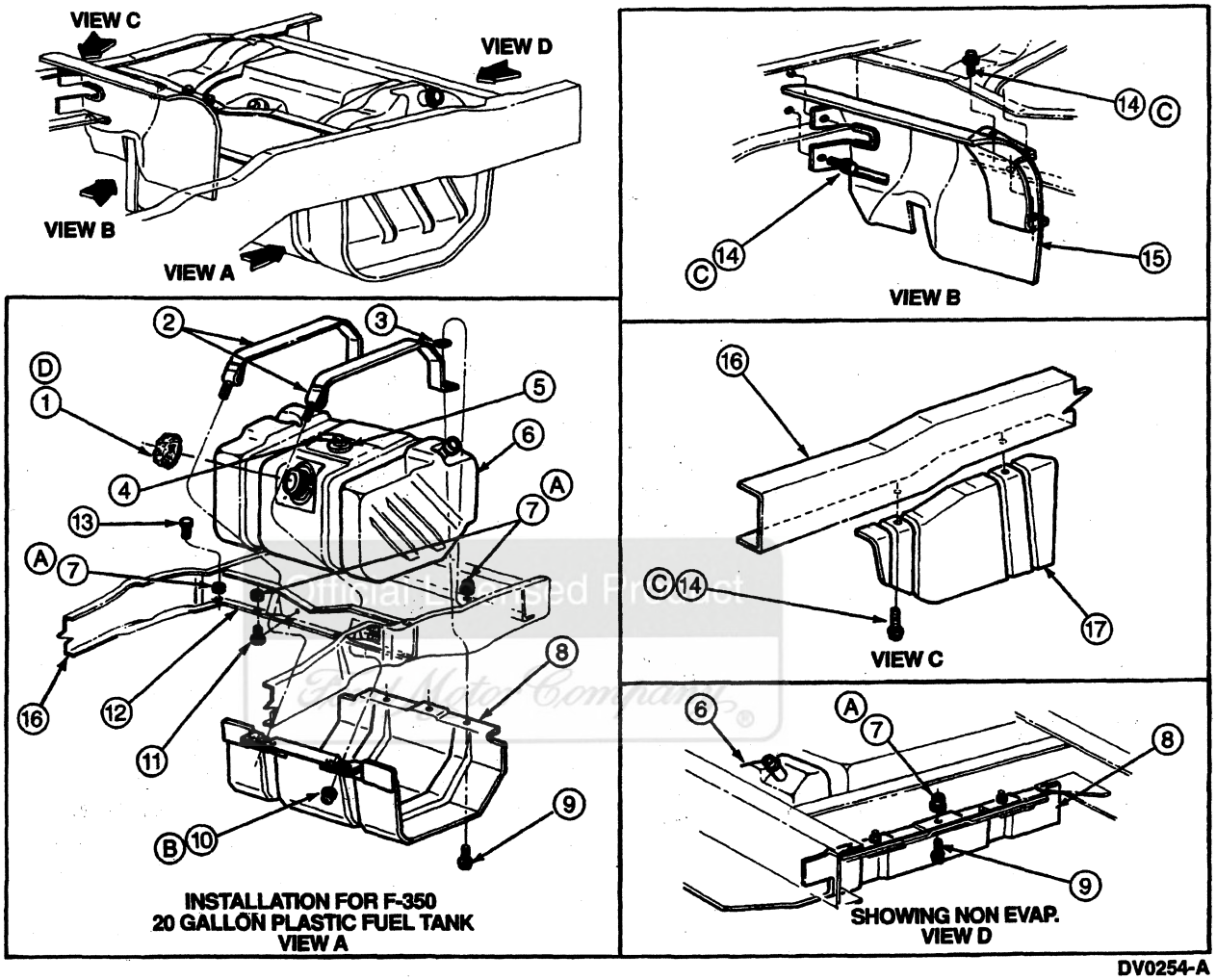

DV0254-A

Item	Part Number	Description
1	9C385	Fuel Pump Locking Retainer Ring
2	9092	Fuel Tank Support Strap
3	W623484-S2	Spring Washer
4	9B227	Evaporative Valve and Hose
5	9B076	Seal
6	9002	Fuel Tank
7	N620482	Nut, M10-1.5
8	9A148	Skid Plate
9	N605920-S2	Bolt, M10-1.5
10	379930-S2	Nut
11	56741	Bolt, M10-1.5
12	5037	Crossmember

(Continued)

Item	Part Number	Description
13	N605801-S2	Bolt
14	40949-S2	Screw
15	9A032	Shield
16	5005	Frame
17	9B100	Shield
A	—	Tighten to 34-46 N·m (25-34 Lb-Ft)
B	—	Tighten to Expose Thread Length 16-18 mm (0.63-0.70 Inch)
C	—	Tighten to 10-14 N·m (7-10 Lb-Ft)
D	—	Tighten to 53-72 N·m (39-53 Lb-Ft)

REMOVAL AND INSTALLATION (Continued)

Fuel Tank, Aft-Of-Axle, F-Super Duty Motorhome Chassis, 75-Gallon Tank

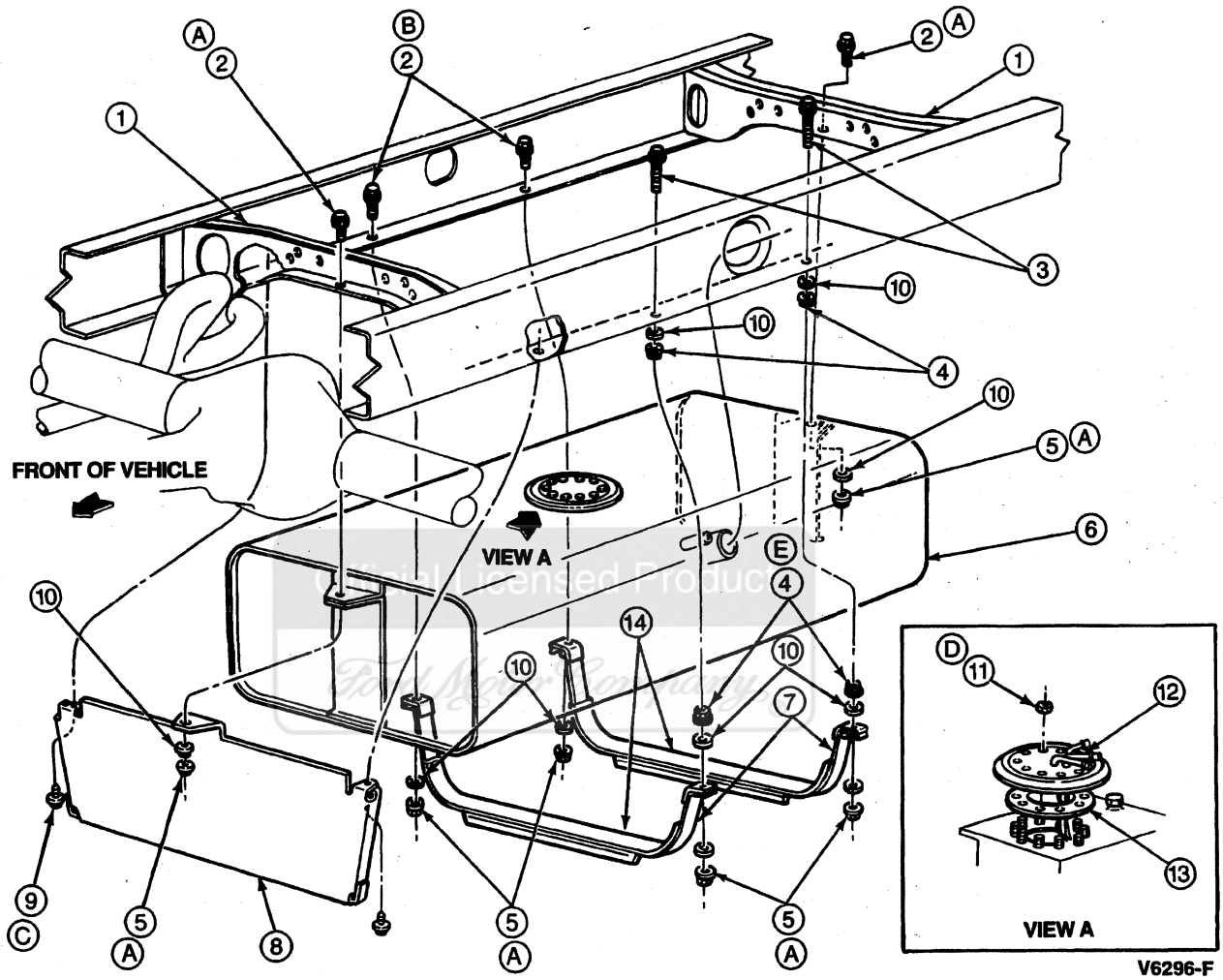

Item	Part Number	Description
1	5C054	Crossmember
2	N802114-S2	Bolt
3	N800898-S2	Bolt
4	N808660-S100	Nut
5	N804446-S160	Nut
6	9002	Fuel Tank
7	9092	Fuel Tank Support Straps
8	9B007	Fuel Tank Modification Shield and Pipe Kit (RH Exhaust Only)
9	W611636-S2	Screw
10	N801616-S	Washer

(Continued)

Item	Part Number	Description
11	N805320-S36	Nut
12	9H307	Fuel Tank Sending Unit and Pump
13	9276	Fuel Level Sensor Gasket
14	9240	Fuel Tank Insulator
A	—	Tighten to 60-95 N·m (44-70 Lb-Ft)
B	—	Tighten to 60-90 N·m (44-66 Lb-Ft)
C	—	Tighten to 20-30 N·m (15-22 Lb-Ft)
D	—	Tighten to 7.5-9.5 N·m (67-84 Lb-In)
E	—	Allow 6-mm (0.23-Inch) Gap

REMOVAL AND INSTALLATION (Continued)

Fuel Tank Support Straps

Refer to Removal and Installation, Fuel Tank (select appropriate configuration and tank location), in this section.

Fuel Tank Filler Pipe, F-250 Heavy Duty and F-350

Procedures are the same for the aft-of-axle and midship fuel filler pipe.

Removal

1. Drain fuel to a level (approximately 3/4 full) below the fuel tank filler pipe connection by using the fuel hose at the fuel pump-to-fuel tube connection.
2. Detach fuel tank filler pipe (9034) from support bracket and disconnect fuel tank filler pipe and vent hoses.
3. Loosen clamp attaching fuel tank filler pipe and disconnect hose from the fuel tank filler pipe, pulling the internal fuel tube from tank filler neck.
4. Remove the three retainer screws that attach the fuel tank filler pipe flange to the fuel filler housing.
5. Remove fuel tank filler pipe from vehicle.
6. Remove hose and clamps. Replace all damaged or worn parts.

Installation

1. Position fuel tank filler pipe in vehicle, being careful to position neck on vehicles with internal vent tube.
2. Position fuel filler vent hoses on fuel tank filler pipe of vehicles with external vent hose.
3. Position clamps on fuel tank filler pipe and vent hoses.
4. Secure fuel tank filler pipe to mounting brackets. Tighten screws to 2-3 N·m (18-27 lb-in).
5. Adjust hose to obtain snug fuel tank filler pipe installation. Tighten hose clamps to 3-4 N·m (27-35 lb-in). Make certain clamps are forward of flange on fuel tank filler pipe to ensure a leakproof connection.
6. Fill fuel tank (9002) with fuel. Install fuel tank filler cap (9030), and check for leaks.

Ford Motor Company

REMOVAL AND INSTALLATION (Continued)

Fuel Filler System Installation, Single Rear Wheel, F-250 Heavy Duty and F-350

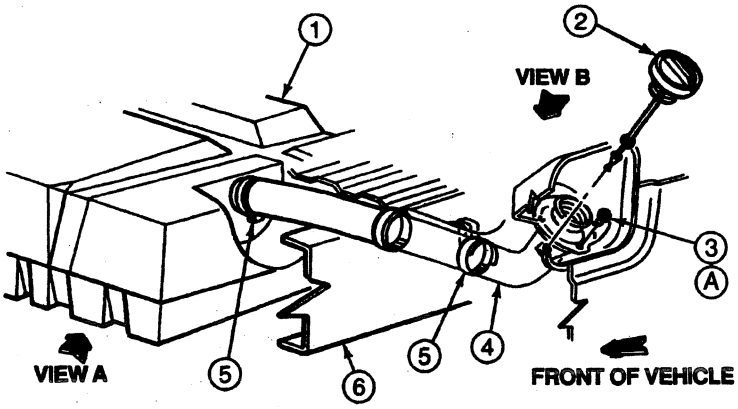

SINGLE REAR WHEELS AND AFT-OF-AXLE FUEL TANK

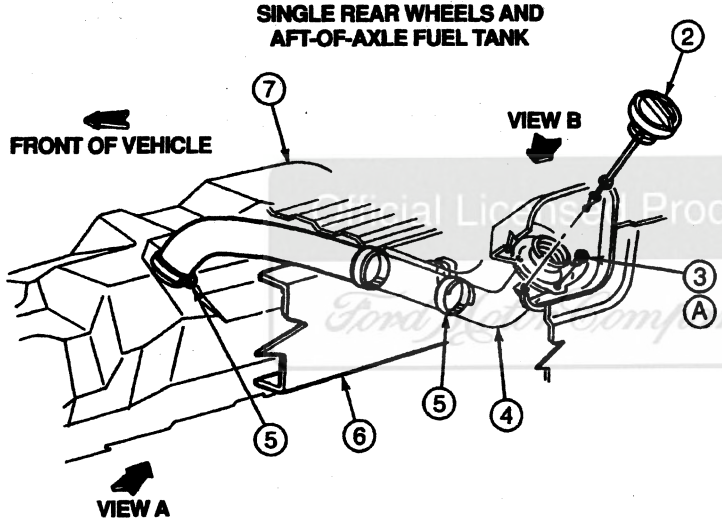

SINGLE REAR WHEELS AND MIDSHIP FUEL TANK

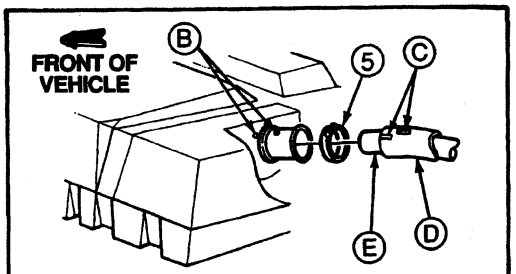

TYPICAL HOSE INSTALLATION VIEW A

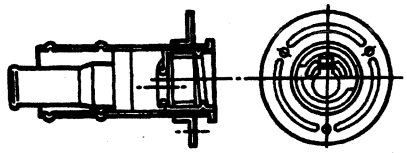

FOR UNLEADED FUEL PIPE ASSEMBLY VIEW B

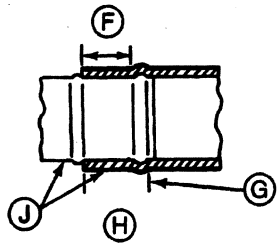

HOSE-TO-TUBE CONNECTION

DV0255-A

Item	Part Number	Description
1	9002	Fuel Tank, Aft-of-Axle
2	9030	Fuel Tank Filler Cap
3	N802826-S55M	Screw
4	9034	Fuel Tank Filler Pipe
5	383526-S	Clamp
6	5005	Frame
7	9002	Fuel Tank, Midship
A	—	Tighten to 3-4 N·m (27-35 Lb-In)
B	—	Install Hose with Stripes in Line with Two Dimples on Fuel Tank

(Continued)

Item	Part Number	Description
C	—	Paint Stripes
D	—	Outer Hose
E	—	Inner Hose
F	—	Install Clamp in This Area (Beyond First Bead and Before Hose End)
G	—	For Pipes Without Secondary Bead
H	—	23.0-mm (0.905-Inch) Engagement
J	—	Install Hose Within 1.5 mm (0.059 Inch) of Secondary Positioning Bead Where Applicable

REMOVAL AND INSTALLATION (Continued)

Fuel Filler System Installation, Dual Rear Wheel, F-250 Heavy Duty, F-350 and F-Super Duty

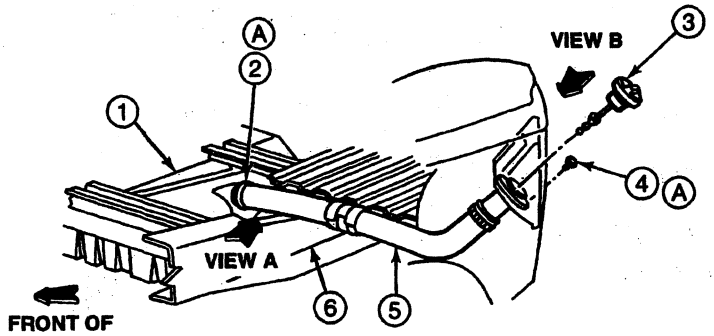

DUAL REAR WHEELS AND AFT-OF-AXLE FUEL TANK

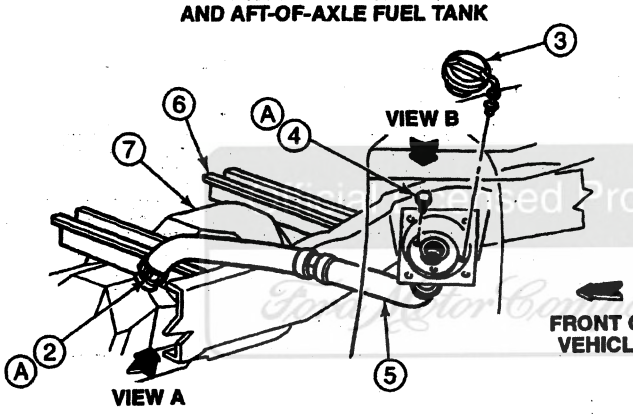

DUAL REAR WHEELS AND MIDSHIP FUEL TANK

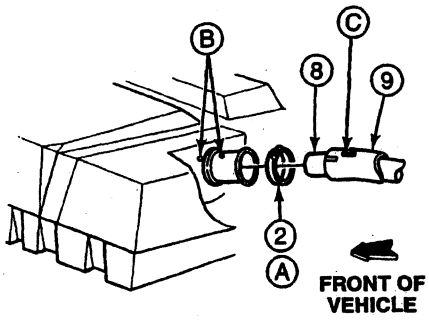

TYPICAL HOSE INSTALLATION SHOWN VIEW A

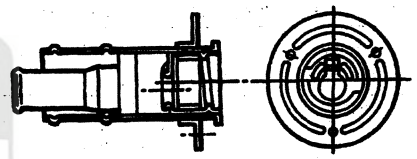

FOR UNLEADED FUEL PIPE ASSEMBLY VIEW B

DV0256-A

Item	Part Number	Description
1	9002	Fuel Tank, Aft-of-Axle
2	383526-S	Clamp
3	9030	Fuel Tank Filler Cap
4	N802826-S60	Screw
5	9034	Fuel Tank Filler Pipe
6	5005	Frame
7	9002	Fuel Tank, Midship

(Continued)

Item	Part Number	Description
8	—	Inner Hose (Part of 9034)
9	—	Fill Hose (Part of 9034)
A	—	Tighten to 3-4 N·m (27-35 Lb-In)
B	—	Install Hose with Stripes in Line with Two Dimples on Fuel Tank
C	—	Paint Stripes

REMOVAL AND INSTALLATION (Continued)

Fuel Filler System, Aft-of-Axle, F-Super Duty Motorhome Chassis

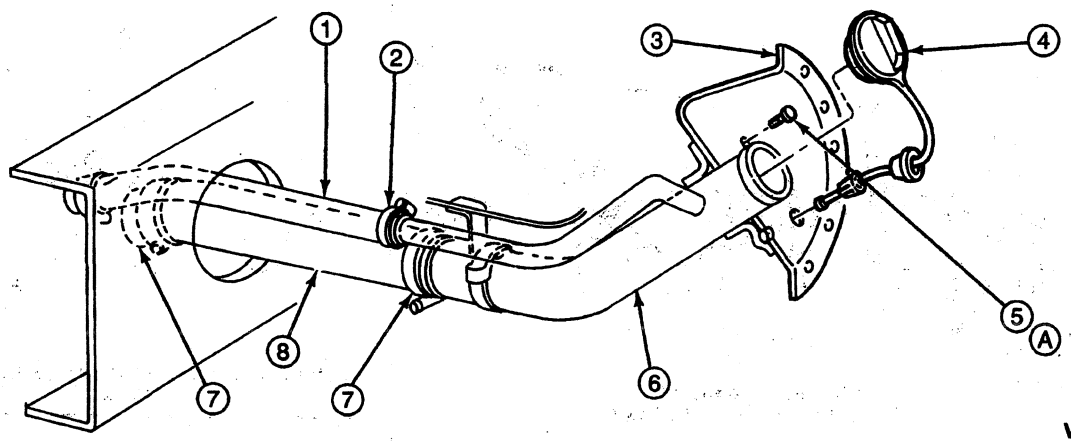

Item	Part Number	Description
1	9170	Fuel Tank Vent Tube Hose
2	383522-S	Clamp
3	9B213	Fuel Tank Filler Pipe Support
4	9030	Fuel Tank Filler Cap
5	N802826-S55M	Screw

(Continued)

Item	Part Number	Description
6	9034	Fuel Tank Filler Pipe
7	383526-S	Clamp
8	9047	Fuel Tank Filler Hose
A	—	Tighten to 17-28 N·m (13-21 Lb-Ft)

Ford Motor Company

Fuel Filter, In-Tank

The inlet of the venturi pump (part of the fuel delivery module) has a nylon filter on it to prevent dirt and other particulate matter from entering the system. Water in the fuel tank (9002) can pass through the filter without restriction. This filter is not serviced as a separate component.

REMOVAL AND INSTALLATION (Continued)

Fuel Pump Assembly

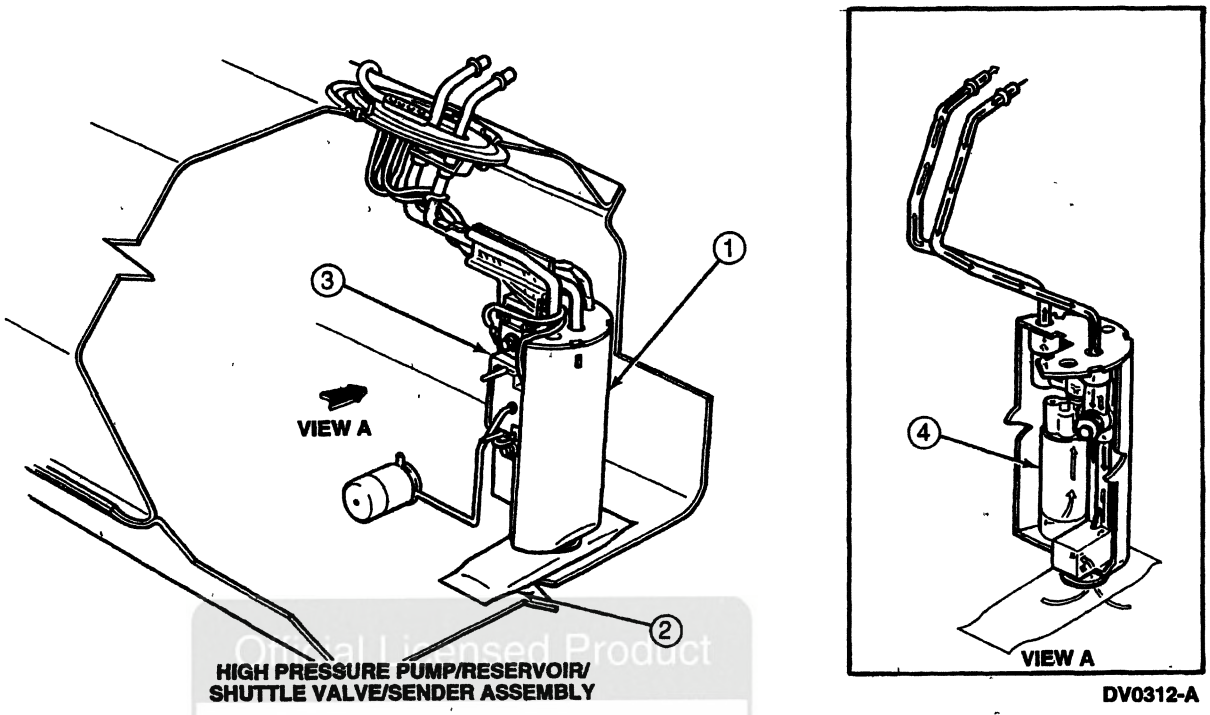

HIGH PRESSURE PUMP/RESERVOIR/ SHUTTLE VALVE/SENDER ASSEMBLY

DV0312-A

Item	Part Number	Description
1	—	Fuel Delivery Module (Part of 9H307)
2	—	In-Tank Venturi Filter (Part of 9H307)
3	9A299	Resistor Assy (Part of 9H307)
4	—	High-Pressure Pump (Part of 9H307)

(Continued)

Fuel Filter, In-Line

CAUTION: If the fuel filter (9155) is being serviced with the rear of the vehicle higher than the front, or if the fuel tank (9002) is pressurized, fuel leakage or siphoning from the tank fuel tubes could occur. To prevent this condition, maintain the vehicle front end at or above the level of the rear of vehicle. Also, relieve fuel system pressure. Refer to Fuel System Pressure Relief in the Service Procedures portion of this section.

Removal

1. Shut engine (6007) off. Depressurize fuel system. Refer to Fuel System Pressure Relief in the Service Procedures portion of this section.
2. Disconnect battery ground cable (14301).
3. Raise vehicle on hoist.
4. Remove filter-to-fuel tube retainer clips.
5. Remove push connect fittings at both ends of the fuel filter.
6. Remove two nuts from filter studs and remove fuel filter bracket (9A335).

Installation

1. NOTE: Note that the direction of the flow arrow points to the tab of the fuel filter bracket against which the fuel filter rests.

   Install fuel filter assembly and two nuts. Tighten nuts to 8-10 N·m (71-89 lb-in).
2. Install push connect fittings onto fuel filter ends.
3. Snap on filter-to-fuel tube retainer clips. Long legs of clips go onto fuel tubes.
4. NOTE: When the battery (10655) has been disconnected and reconnected, some abnormal drive symptoms may occur while the powertrain control module (PCM)(12A650) relearns its adaptive strategy. The vehicle may need to be driven 16 km (10 miles) or more to relearn the strategy.

   Lower vehicle and connect battery ground cable.
5. Turn ignition switch (11572) from OFF to RUN position several times without starting engine. Check for fuel leaks.

REMOVAL AND INSTALLATION (Continued)

In-Line Fuel Filter Installation

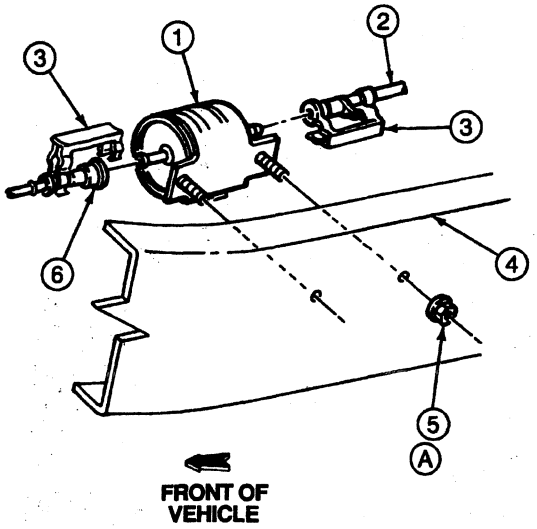

V8537-D

Item	Part Number	Description
1	9A335	Fuel Filter Bracket
2	9S278	Rear Fuel Tube
3	9J278	Fuel Tube Retainer
4	5005	Frame
5	N620480-S2	Nut
6	9J338	Front Fuel Tube
A	—	Tighten to 8-10 N·m (71-89 Lb-In)

Fuel Tank Sending Unit and Pump

CAUTION: Fuel supply tubes remain pressurized for long periods of time after the engine (6007) is shut down. This pressure must be relieved before the fuel system is serviced. Refer to Fuel System Pressure Relief in the Service Procedures portion of this section.

Removal

1. Remove the fuel tank (9002) . Refer to Fuel Tank (select appropriate configuration and tank location) in the Removal and Installation portion of this section.
2. Position fuel tank on a work bench and remove any dirt that has accumulated around the fuel tank sending unit and pump so that it will not enter the fuel tank.
3. Turn the fuel pump locking retainer ring (9C385) counterclockwise with Fuel Tank Sender Wrench D84P-9275-A or equivalent and remove fuel pump locking retainer ring.
4. Remove the fuel tank sending unit and pump from the fuel tank.
5. Remove seal gasket and discard.

Installation

1. Clean the fuel pump mounting flange and the fuel tank mounting surface and groove in the fuel pump mounting gasket (9417).
2. Put a light coating of Premium Long-Life Grease XG-1-C or -K or equivalent meeting Ford specification ESA-M1C75-B on a new fuel pump mounting gasket to hold it in place during assembly. Install it in the fuel ring groove.
3. Install fuel tank sending unit and pump carefully to make sure that the fuel filter (9155) is not damaged. Be sure that the tabs of the fuel tank sending unit and pump are positioned into slots of the fuel tank. Make sure ring remains in place.
4. Hold the fuel tank sending unit and pump and fuel pump mounting gasket in place; install and rotate the fuel pump locking retainer ring clockwise until the stop is against the retainer ring tab.
5. Install fuel tank . Refer to Fuel Tank (select appropriate configuration and tank location) in the Removal and Installation portion of this section.

Official Licensed Product Motor Company

REMOVAL AND INSTALLATION (Continued)

Fuel Tank Sending Unit and Pump, F-250 Heavy Duty and F-350

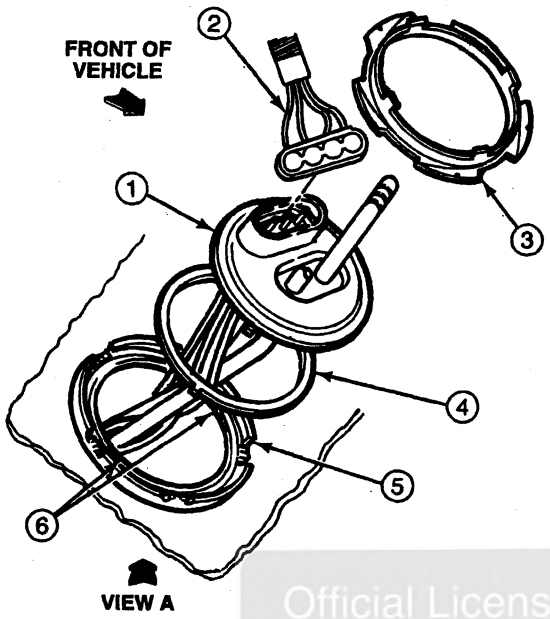

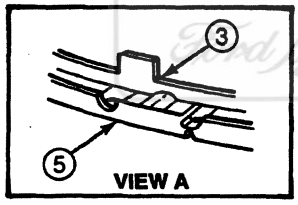

DV0314-A

Item	Part Number	Description
1	9350	Fuel Pump
2	14405 or 14406	Wiring Assy
3	9C385	Fuel Pump Locking Retainer Ring (Using D84P-9275-A or Equivalent, Turn Until Tabs Are Positioned Between Detent and Stop on Tank)
4	9417	Fuel Pump Mounting Gasket
5	9002	Fuel Tank
6	—	Locking Slots (Part of 9002) (Make Sure FDM Tabs Are Seated in Slot)

Fuel Tank Sending Unit and Pump, Units with Plastic Locking Ring, F-350 Chassis Cab

The fuel pump removal and installation procedure for units equipped with plastic fuel tank sending unit locking retainer rings is the same for units equipped with metal fuel tank sending unit locking retainer rings. The fuel tank sending unit locking retainer ring on these units can be removed with a band-type oil filter wrench or equivalent by turning counterclockwise. When installing the fuel tank sending unit locking retainer ring, tighten ring to 53-72 N·m (39-53 lb-ft).

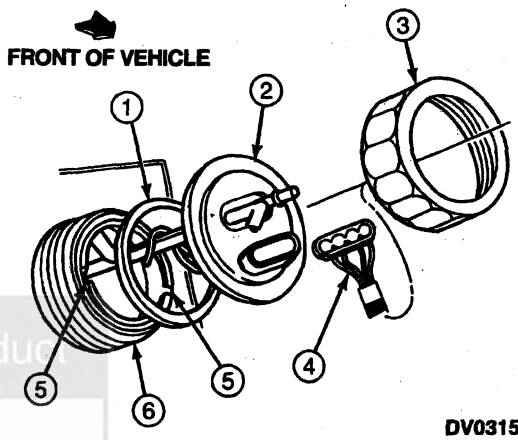

DV0315-A

Item	Part Number	Description
1	9417	Fuel Pump Mounting Gasket
2	9H307	Fuel Tank Sending Unit and Pump
3	9A307	Fuel Tank Sending Unit Locking Retainer Ring
4	14405 or 14406	Wiring Assy
5	—	Locating Tabs (Part of 9H307 or 9275 Fuel Pump and Sending Unit)
6	9002	Fuel Tank

Fuel Vapor Valve

The evaporative emission valve (9B593) is centrally located on the upper surface of the fuel tank (9002) and is installed using a rubber gasket seal.

Official Licensed Product Ford Motor Company

REMOVAL AND INSTALLATION (Continued)

Fuel and Vapor Return Tubes

Removal

WARNING: MOST CONNECTIONS IN THE EVAPORATIVE EMISSION SYSTEM ARE VERY SECURE. A STRONG PULLING AND SIMULTANEOUS TWISTING ACTION IS REQUIRED TO DISCONNECT. WHEN DISCONNECTION OCCURS, BOTH HANDS CAN SHARPLY AND UNCONTROLLABLY MOVE IN THE DIRECTION OF EACH HAND'S PULLING. BE CAREFUL THAT NO SHARP OR POSSIBLY DAMAGING OBJECTS ARE IN LINE WITH THE DIRECTION OF PULL TO PREVENT PHYSICAL INJURY OR DAMAGE TO THE OBJECTS THAT WILL BE IMPACTED BY THE HANDS WHEN DISCONNECTION OCCURS.

1. Grip component securely with one hand and tube with the other hand, as close as possible to connection.
2. Sharply twist tube along its axis to "break" the temporary bond between tube and component. (No adhesive is used to make tube connections during vehicle assembly, but natural aging of the connections causes a temporary bond to exist.)
3. It is important to "break free" the tube at its connection point as indicated in Step 2. If the joint is stubborn and the above method does not work, grip the tube with a pair of pliers directly over the joint and twist again.
4. Once the tube / component joint has been broken, disconnect by gripping the component securely with one hand and hose with the other. Twist tube and, at the same time, pull apart.

Installation

1. To reconnect a tube to a component, wet the tube with water and push onto component.
2. Vapor tubes should be assembled with the minimum engagement shown in the following illustration.

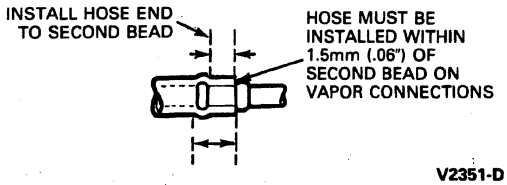

V2351-D

Push Connect Fittings, Steel

CAUTION: Discharge fuel system before disconnecting coupling.

SPECIAL SERVICE TOOL(S) REQUIRED

Description	Tool Number
Fuel Line Disconnect Tool Kit	T90T-9550-S
5 / 16-Inch	T90T-9550-B
3 / 8-Inch	T90T-9550-C

Removal

1. Open safety clip.

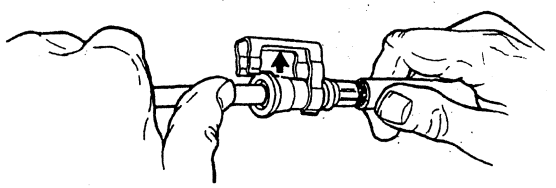

V9067-A

2. Fit Tool T90T-9550-B (5 / 16-inch) or T90T-9550-C (3 / 8-inch) to coupling so that tool can enter female fitting.

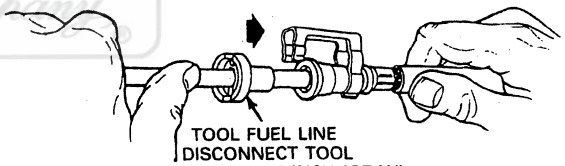

V9068-A

3. Push the tool into female fitting to release the retaining fingers from the formed male tube end.
4. Pull male and female fittings apart.

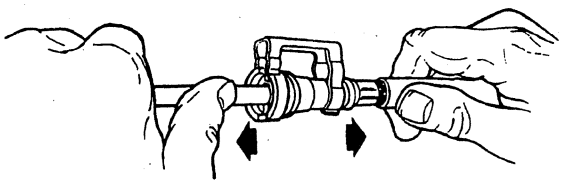

V9069-A

5. Remove the tool from the disconnected fitting.
6. Inspect the fitting for any internal parts that might have been damaged. Fuel tube should be replaced if internal parts are damaged.

REMOVAL AND INSTALLATION (Continued)

Installation

1. Align the fitting and tube axially.

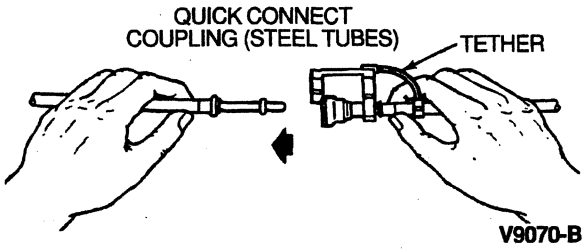

2. Push the tube into the fitting. When properly engaged, a definite "click" will be heard.

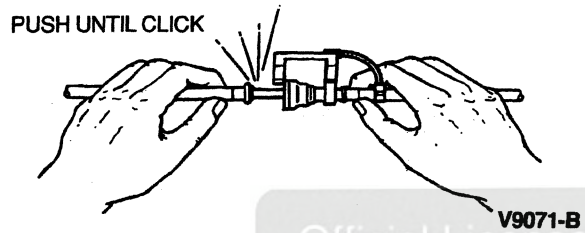

3. Pull on the fitting to make sure it is fully engaged.

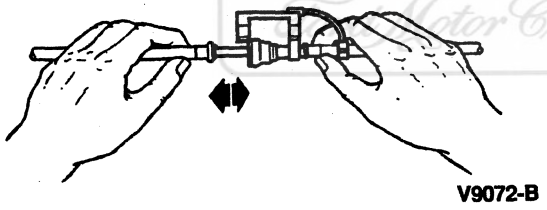

4. Lock assembly with safety clip.

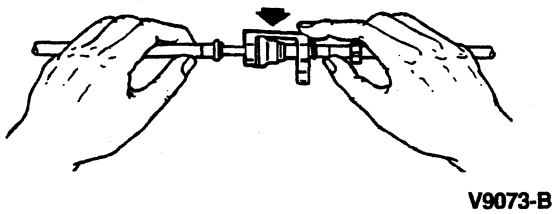

Spring Lock Coupling

SPECIAL SERVICE TOOL(S) REQUIRED

Description	Tool Number
Spring Lock Coupling Disconnect Tool (5/8-Inch)	T83P-19623-C

The spring lock coupling tool will not always fit over the shielded tube. To accommodate the shielding, the hole in the tubing end of the tool must be enlarged. To do this, clamp the tool closed and drill out the existing hole with 5/8-inch bit. Be careful to drill only the tubing hole and not the working end of the hole.

Removal

CAUTION: Discharge fuel system before disconnecting coupling.

NOTE: Metal safety clips are used on metal tubes with metal spring lock connectors. Both types are illustrated.

NOTE: Before disconnecting, locate white indicator ring, which may have slipped down length of fuel tube.

1. Fit Spring Lock Coupling Disconnect Tool T83P-19623-C to coupling so that tool can enter cage to release the garter spring.

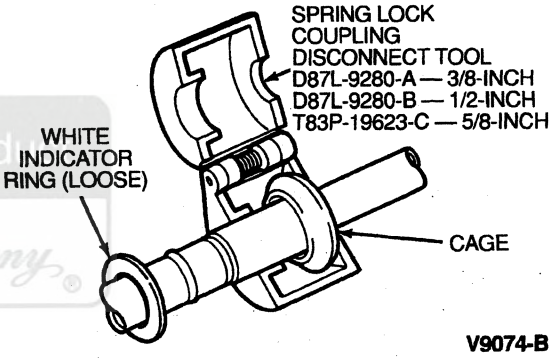

2. Push the tool into the cage opening to release the female fitting from the garter spring.

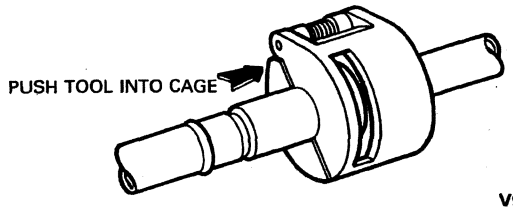

3. Pull the coupling male and female fittings apart.

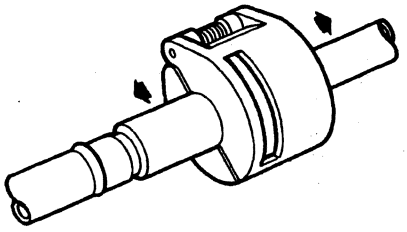

Official Licensed Product Ford Motor Company

REMOVAL AND INSTALLATION (Continued)

4. Remove the tool from the disconnected spring lock coupling.

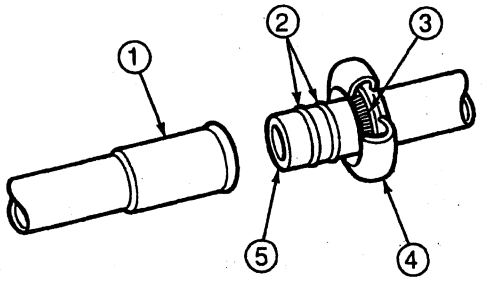

V9131-B

Item	Part Number	Description
1	—	Female Fitting (Part of 9J337)
2	—	O-Rings (Part of 19D690)
3	—	Garter Spring (Part of 9J337)
4	—	Cage (Part of 9J337)
5	—	Male Fittings (Part of 9J337)

Installation

1. Check for missing or damaged garter spring. If spring is damaged or missing remove damaged spring with small hooked wire and install a new spring.

REPLACEMENT GARTER SPRINGS
3/8 INCH – E1ZZ-19E576-A
1/2 INCH – E1ZZ-19E576-B
ALSO AVAILABLE IN
E35Y-19D690-A KIT

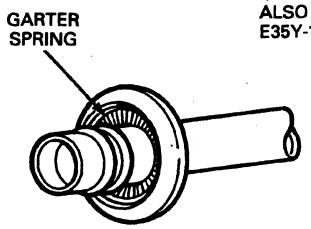

V9132-A

2. Clean fittings and install new O-rings. Use only specified O-rings supplied in E9UZ-9B307-A kit. Lubricate with clean oil. Insert white indicator ring into cage on male fitting. Assemble fitting together by pushing with a slight twisting motion.

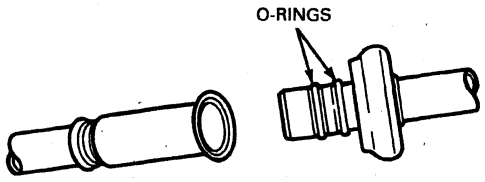

V9133-A

3. White indicator ring will pop free of cage on male fitting when fully joined. This indicates that garter spring inside cage of male fitting is properly seated over lip of female connector.

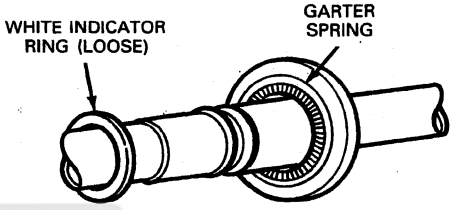

V9134-A

Fuel Tube Retainer

1. Visually check to be sure garter spring is over flared end of female fitting.
2. Pull on connector opposite to the direction of installation to verify that the connector is locked in place. If connector is not locked in place, refer to Spring Lock Coupling in the Removal and Installation portion of this section.

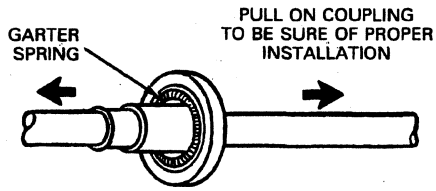

SPRING LOCK COUPLING — FOR FUEL LINE TO ENGINE FUEL RAIL CONNECTIONS

V9135-A

Ford Licensed Product
Ford Motor Company

REMOVAL AND INSTALLATION (Continued)

3. Install large end of clip to garter spring side of fuel tube, making sure that clip is properly positioned. The black 12.7-mm (1/2-inch) clip fits the fuel supply tube. The silver 9.5-mm (3/8-inch) clip fits fuel return tube. Refer to the following illustration.

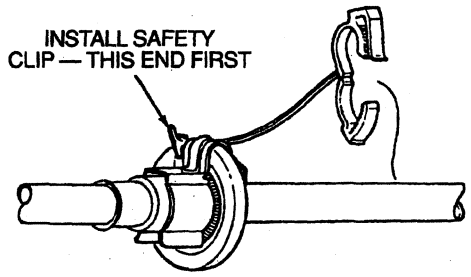

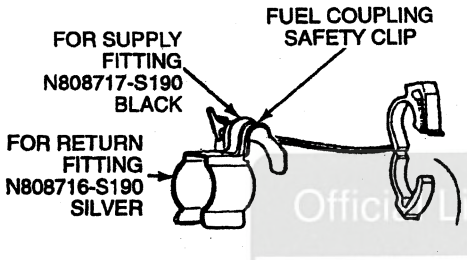

4. Attach the tether to the fuel tube and snap shut.

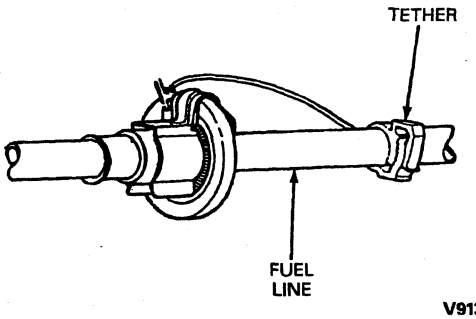

Fuel Pressure Regulator

Refer to Section 03-04A or Section 03-04B.

CLEANING AND INSPECTION

Fuel Tanks

CAUTION: Leaks or damage to the polyethylene fuel tanks (9002) are not repairable. This applies to certain F-Series vehicles with a plastic fuel tank including all polyethylene portions of the fuel tank body and fittings. Fuel tank replacement is the only acceptable service. There are no reliable repair products that meet the same standards as a new fuel tank. Methods that appear to work might not function for the long term or after being subjected to normal use or abuse.

Fuel tanks can be steam-cleaned or serviced using standard procedures. After steaming, allow time to thoroughly air dry. Remove evaporative emission valve (9B593) and fuel tank sending unit and pump prior to steaming.

SERVICE PROCEDURES

Fuel System Pressure Relief

CAUTION: Fuel supply tubes on 5.8L and 7.5L engines (6007) will remain pressurized for some period of time after the engine is shut off. This pressure must be relieved before servicing the fuel system.

Before opening the fuel system on vehicles, relieve fuel pressure as follows:

1. Locate and disconnect the electrical connection to either the fuel pump relay, the inertia fuel shutoff switch or the in-line high fuel pump (9350).
2. Crank engine for approximately ten seconds. Engine might start and run for a short time. If so, crank engine an additional five seconds after engine stalls.
3. Connect the electrical connector that was disconnected in Step 1.
4. NOTE: When the battery (10655) has been disconnected and reconnected, some abnormal drive symptoms may occur while the powertrain control module (PCM)(12A650) relearns its adaptive strategy. The vehicle may need to be driven 16 km (10 miles) or more to relearn the strategy.

   Disconnect battery ground cable (14301). Fuel system is now ready for service.

Fuel System — Pressurized

Fuel Tubes, Steel

Front and rear fuel tubes are made of stainless steel tubes and flexible Teflon® tubing with a stainless steel braid cover. If any portion of the tube becomes damaged, it must be replaced.

Official Licensed Product Ford Motor Company

SERVICE PROCEDURES (Continued)

1. Relieve fuel system pressure. Refer to Fuel System Pressure Relief in the Service Procedures portion of this section. Read cautionary note prior to relieving pressurized fuel system.
2. Remove tubes.

Push Connect Tube Ends, Steel

1. Using a tube cutter, remove the damaged push connect tube end at a convenient distance from the end. Allow for adequate room to tighten the union with a wrench.
2. Choose a proper replacement push connect tube end.
3. If required, form the new tube end to the same shape as the damaged tube end which was removed.
4. Select the proper size union and attach the new steel tube end to the original tube.
5. Clean off the steel tube end and replace the push connect fitting onto the tube. (A new retainer clip is recommended.)
6. Check that the underbody clips are properly securing the fuel tubes.
7. Start engine and check for leaks.

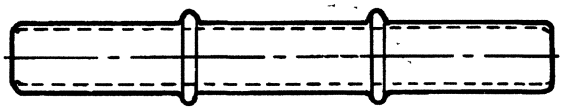

STEEL TUBE ENDS

STEEL TO STEEL TUBE SPLICE

UNION

V9200-A

Official Licensed Product
Ford Motor Company

SPECIFICATIONS

FUEL SYSTEM PRESSURE SPECIFICATIONS

Engine Condition	5.8L	7.5L
Engine Running	28-45 psi 193-310 kPa	28-45 psi 193-310 kPa
Key ON Engine OFF	35-45 psi 210-310 kPa	35-45 psi 240-310 kPa

STANDARD AND AUXILIARY FUEL TANKS — CAPACITY IN LITERS (GALLONS)

Vehicle	Wheelbase mm (In.)	Body Style	Location	Fuel Evap.	Advertised Tank Cap. Refill Liters (Gal.)
F-250 Heavy Duty 4x2	3378 (133 0)	Reg. Cab	Midship Aft/Axle[a]	X X	72 (19) 69 (18 2)
F-250 Heavy Duty 4x2	3937 (155 0) 4278 (168 0)	SuperCab	Midship Aft/Axle[a]	X X	72 (19) 69 (18 2)
F-250 Heavy Duty 4x4	3378 (133 0)	Reg Cab/E4OD	Midship[b] Midship[a] Aft/Axle[ab]	X X X	72 (19) 62 (16 5) 69 (18.2)
F-250 Heavy Duty 4x4	3937 (155 0)	SuperCab	Midship[b] Aft/Axle[ab]	X X	72 (19) 69 (18 2)
F-350 4x2 and 4x4	3378 (133 0)	Chassis Cab W/E4OD Chassis Cab	Midship Midship[c] Aft/Axle[ad]	X X X	69 (18 2) 62 (16.5) 72 (19)
F-350 4x2 and 4x4	3475 (136 8)	Chassis Cab	Midship Aft/Axle[ce]	X X	72 (19) 72 (19)
F-350 4x2 and 4x4	4084 (160 8)	Chassis Cab	Midship Aft/Axle[ce]	X X	72 (19) 72 (19)

(Continued)

SPECIFICATIONS (Continued)

STANDARD AND AUXILIARY FUEL TANKS — CAPACITY IN LITERS (GALLONS) (Cont'd)

Vehicle	Wheelbase mm (In.)	Body Style	Location	Fuel Evap.	Advertised Tank Cap. Refill Liters (Gal.)
F-350 4x2 and 4x4	3937 (155.0)	SuperCab	Midship Aft / Axle[d]	X X	72 (19) 69 (15.2)
F-Super Duty	3475 (136.8)	Chassis Cab	Midship Aft / Axle[d]	X X	72 (19) 72 (19)
F-Super Duty	4085 (160.8)	Chassis Cab	Aft / Axle[d] Midship	X X	72 (19) 72 (19)
F-Super Duty Motorhome Chassis	4521 (178)	Commercial Chassis	Aft / Axle[c]	X	284 (75)
F-Super Duty Motorhome Chassis	5283 (208)	Commercial Chassis	Aft / Axle[c]	X	284 (75)
F-Super Duty Motorhome Chassis	4826 (190) 5791 (228)	Commercial Chassis	Aft / Axle[c]	X	284 (75)

a Standard dual tanks.
b Optional skid plate available with 4x4 models.
c Standard skid plate on 4x4 models.
d Steel auxiliary tank.
e Plastic auxiliary tank.

NOTE: All aft-of-axle fuel tanks are standard. Midship is optional on some vehicles.

LUBRICANT/ADHESIVE/CLEANER SPECIFICATIONS

Description	Part Number	Ford Specification
Premium Long-Life Grease	XG-1-C or -K	ESA-M1C75-B
Gasket and Trim Adhesive	D7AZ-19B508-B	ESR-M11P17-A or ESE-M2G52-A

TORQUE SPECIFICATIONS

Description	N·m	Lb-Ft	Lb-In
Front Fuel Tube Bracket Nuts	11-15	8-11	—
Filter Bracket Nuts	8-10	—	71-89
Filter Bracket Nuts, F-Super Duty Motorhome Chassis	9-13	—	80-115
Front and Rear Strap Nuts, Midship Fuel Tank	30-40	22-30	—
Skid Plate / Heat Shield Nuts and Bolts, Midship Fuel Tank	16-24	12-18	—
Heat Shield Bracket, Midship Fuel Tank	16-24	12-18	—
Crossmember Nuts, Midship Fuel Tank	34-46	25-34	—
Bracket / Crossmember, Bolts Midship Fuel Tank	22-28	16-21	—
Support Assembly Nuts, Aft-of-Axle Fuel Tank	34-46	25-34	—
Shield / Frame Bolts Aft-of-Axle Fuel Tank	10-14	8-11	—

(Continued)

TORQUE SPECIFICATIONS (Cont'd)

Description	N·m	Lb-Ft	Lb-In
Heat Shield Bolt, Super Duty Motorhome, Aft-of-Axle Fuel Tank	20-30	15-22	—
Locking Ring, Plastic Fuel Tank Fuel Delivery Module (FDM Pump)	53-72	39-53	—
Fuel Tank Sending Unit and Pump Nut	7.5-9.5	—	67-84
Organizer Assembly	8-10	—	71-89
Fuel Filter to Frame	8-10	—	71-89
Fuel Tank Filler Pipe Mounting Bracket Screws	2-3	—	18-27
Upper Fuel Tank Mounting Strap Bolts	60-95	44-70	—
Fuel Tank Mounting Strap Bolts	60-90	44-66	—
Fuel Tank Heat Shield Nuts	16-24	12-18	—
Fuel Tank Filler Pipe Hose Clamps	3-4	—	27-35
Upper Fuel Tank Filler Pipe Support Screws	17-28	13-21	—
Fuel Tank Sending Unit Locking Retainer Ring, F-350 Chassis Cab	54-75	40-55	—

Official Licensed Product

SPECIAL SERVICE TOOLS/EQUIPMENT

SPECIAL SERVICE TOOLS REQUIRED

Tool Number/ Description	Illustration
T83P-19623-C Spring Lock Coupling Disconnect Tool (5/8-Inch)	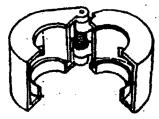 T83P-19623-C
T90T-9550-S Fuel Line Disconnect Tool Kit (5/16-Inch)	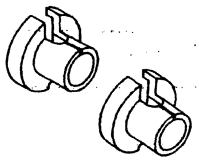 T90T-9550-S

SPECIAL SERVICE TOOLS DESIRED

Tool Number	Description
D84P-9275-A	Fuel Tank Sender Wrench
D87L-9280-A	Spring Lock Coupling Tool (3/8-Inch)
D87L-9280-B	Spring Lock Coupling Tool (1/2-Inch)

ROTUNDA EQUIPMENT

Model	Description
134-R0080	Plastic Fuel Line Connector Tool
164-R3201	Fuel Storage Tanker

Official Licensed Product
Ford Motor Company

SECTION 10-01B Fuel Tank, Filters, Tubes and Fuel Pump, Diesel Engine

SUBJECT	PAGE
VEHICLE APPLICATION	10-01B-1
DESCRIPTION AND OPERATION	
Fuel Filter	10-01B-3
Fuel Gauge	10-01B-3
Fuel Pump, Mechanical	10-01B-3
Fuel Selector Valve	10-01B-2
Fuel Tank and Fuel Tank Filler Pipe	10-01B-1
Fuel Tank Filler Cap	10-01B-2
Fuel Tank Sending Unit, Diesel	10-01B-3
Fuel Tubes	10-01B-3
Push Connect Fittings	10-01B-3
Fuel/Water Separator	10-01B-3
DIAGNOSIS AND TESTING	
Fuel Tank, Filters, Tubes and Fuel Pump	10-01B-4
REMOVAL AND INSTALLATION	
Fuel and Vapor Return Tubes, Plastic	10-01B-20
Fuel Draining	10-01B-4
Fuel Filling	10-01B-4
Fuel Pump	10-01B-16
Fuel Return Tubes, Metal	10-01B-19
Fuel Tank Filler Pipe	10-01B-13
Fuel Tank Support Straps	10-01B-13
Fuel Tank(s), Aft-of-Axle, F-250 Heavy Duty, F-350 and F-Super Duty Chassis Cab	10-01B-10

SUBJECT	PAGE
REMOVAL AND INSTALLATION (Cont'd.)	
Fuel Tank(s), Plastic Midship, F-250 Heavy Duty and F-350 4x4	10-01B-8
Fuel Tank(s), Steel Midship, F-250 Heavy Duty, F-350 and F-Super Duty Chassis Cab	10-01B-4
Fuel/Water Separator	10-01B-18
Push Connect Fittings	10-01B-21
Selector Valve, Auxiliary Fuel Tank	10-01B-22
Sending Unit, Fuel Tank (Metal Locking Ring)	10-01B-16
Sending Unit, Fuel Tank (Plastic Locking Ring)	10-01B-16
CLEANING AND INSPECTION	
Fuel Tanks	10-01B-23
Fuel Tubes, Filter and Water Separator	10-01B-23
SERVICE PROCEDURES	
Fuel System Pressure Relief	10-01B-24
Fuel System, Pressurized	10-01B-24
Fuel and Vapor Return Tubes	10-01B-24
Push Connect Tube Ends, Steel	10-01B-24
Push Connectors, Nylon	10-01B-24
SPECIFICATIONS	
Fuel System Specifications	10-01B-25
SPECIAL SERVICE TOOLS/EQUIPMENT	10-01B-26

Licensed to Ford Motor Company

VEHICLE APPLICATION

F-250 Heavy Duty, F-350 and F-Super Duty

DESCRIPTION AND OPERATION

Fuel Tank and Fuel Tank Filler Pipe

This vehicle uses a midship mounted fuel tank (9002), located between the frame rails, mounted to the LH frame rail, or an aft-of-axle fuel tank, mounted between the frame rails, located behind the rear axle assembly. Vehicles equipped with dual fuel tanks use both the midship fuel tank and the aft-of-axle fuel tank.

The fuel tank filler pipe (9034) extends from the midship fuel tank, or the aft-of-axle fuel tank to the LH side of the vehicle. The fill limiting system is designed to permit an approximate 10-12 percent fuel tank volume air space when the fuel tank is filled to capacity. This air space provides for thermal expansion of fuel.

DESCRIPTION AND OPERATION (Continued)

Fuel Tank Filler Cap

WARNING: FUEL TANK FILLER CAP (9030) MIGHT BE PRESSURIZED. TO REMOVE, ROTATE CAP OVER ONE-HALF TURN COUNTERCLOCKWISE. IF CAP IS VENTING FUEL OR A HISSING SOUND IS HEARD, WAIT UNTIL THE CONDITION STOPS BEFORE REMOVING THE CAP. IF THESE PRECAUTIONS ARE NOT FOLLOWED, FUEL CAN SPRAY AND CAUSE PERSONAL INJURY.

The fuel tank filler cap is of a threaded screw-on design with a pre-vent feature that allows the fuel tank (9002) to vent for the first three-quarter turn before unthreading. All fuel tank filler caps are attached to the vehicle with a tether using the filler pipe-to-housing screw at the three to four o'clock position. The fuel tank filler cap assembly provides pressure and vacuum relief functions, and must be replaced with the proper pressure / vacuum relief cap to prevent possible system malfunction.

WARNING: DO NOT SMOKE OR CARRY LIGHTED TOBACCO OR AN OPEN FLAME OF ANY TYPE WHEN WORKING ON OR NEAR ANY FUEL-RELATED COMPONENT. HIGHLY FLAMMABLE MIXTURES ARE ALWAYS PRESENT AND CAN BE IGNITED, RESULTING IN POSSIBLE PERSONAL INJURY.

Fuel Selector Valve

The six-port diesel fuel valve is powered by a small electric motor which opens and closes the valve ports. The supply and return ports for either tank open and close simultaneously. The valve is shifted to the front mode (that is, the front supply and return ports open to the engine supply and engine return port respectively) by applying a positive 12 volts to terminal 2 and ground to terminal 1. When the valve reaches the front mode position, an internal switch opens the circuit and stops the motor. Returning the valve to the rear mode is accomplished by reversing the current: positive 12 volts to terminal 1 and ground to terminal 2. Terminals 3 and 5 connect to the front and rear fuel tank senders respectively, and terminal 4 feeds the fuel gauge. In the front tank mode, an internal switch connects terminal 3 to terminal 4, thus supplying the front tank sender signal to the fuel gauge. Terminals 4 and 5 are connected in the rear tank mode. Therefore, a change in the fuel gauge reading (assuming at least 1 / 4 tank fuel level difference) means that the valve has shifted.

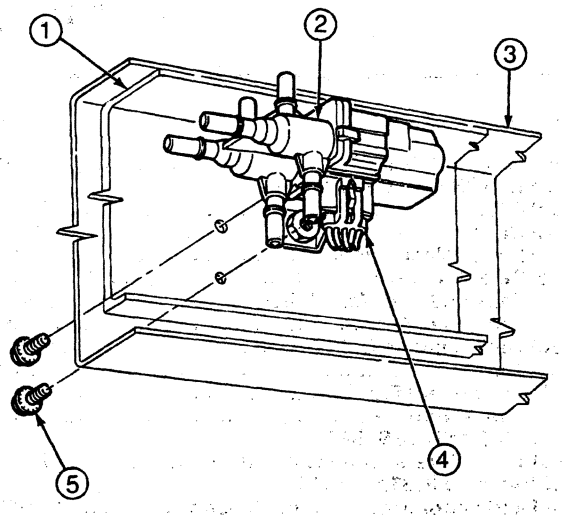

V4819-D

Item	Part Number	Description
1	—	Frame Doubler (F-350 Chassis Cab Only) (Part of 5005)
2	9F271	Six-Port Fuel Tank Selector Valve
3	5005	Frame
4	—	Electrical Connector (Part of 14405 Wiring Assy)
5	N605905	Bolt

Electrical current is supplied to the fuel tank selector switch from the fuse panel when the ignition switch (11572) is in the ON position. This current goes through the fuel tank selector switch directly to the motorized fuel tank selector valve.

With the fuel tank selector switch in the front tank position, current is supplied from the selector switch to terminal 2 of the fuel selector valve. The ground path is completed through terminal 1 of the fuel tank selector valve and is grounded through the selector switch. This causes the fuel selector valve to rotate internally, opening the ports to the front tank position which allows fuel to flow through the fuel tube to the engine.

With the fuel tank selector switch in the rear tank position, current is supplied from the selector switch to terminal 1 of the fuel tank selector valve. The ground path is completed through terminal 2 of the fuel tank selector valve and is grounded through the selector switch. This current path causes the motorized valve to rotate internally, opening the ports to the rear tank position which allows fuel to flow through the fuel tube to the engine.

Official Licensed Product
Ford Motor Company

DESCRIPTION AND OPERATION (Continued)

Fuel Filter

The diesel fuel filter is a replaceable element design. The fuel filter is located in the fuel filter / water separator housing.

Fuel / Water Separator

Water should be drained from the engine-mounted fuel / water separator whenever the warning lamp comes on or every 8000 km (5000 miles). More frequent drain intervals might be required depending on fuel quality and vehicle usage.

NOTE: Dispose of drainage waste properly in accordance with all federal, state and local requirements.

The instrument panel warning lamp (WATER IN FUEL) will glow when approximately 0.1 liter (0.1 quart) of water has accumulated in the sedimentor. When the warning lamp glows, shut off the engine as soon as safely possible.

Fuel Tubes

The fuel tubes used on the diesel engine are mostly of the nylon push connect type.

Push Connect Fittings

Push connect fittings are used to make most vehicle fuel tube connections in diesel fuel systems. These fittings must be serviced as described in Push Connectors, Nylon, in the Service Procedures portion of this section. Service is not possible if the fitting is damaged, except to replace a damaged retaining clip.

Fuel Pump, Mechanical

WARNING: DO NOT SMOKE OR CARRY LIGHTED TOBACCO OR AN OPEN FLAME OF ANY TYPE WHEN WORKING ON OR NEAR FUEL OR FUEL VAPOR.

The fuel pump (9350) is bolted to the top of the cylinder block.

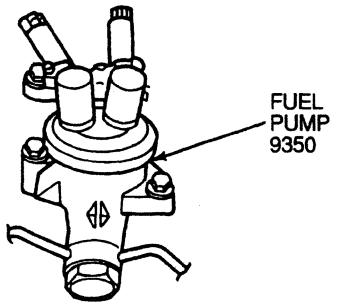

V9558-A

The fuel pump is mechanically operated by an eccentric cam located on the camshaft. The pump actuator rides against the eccentric, providing the diaphragm up-and-down pumping motion.

The fuel pump cannot be disassembled for repairs and must be replaced if testing indicates it is not within performance specifications. Refer to the 1996 Powertrain Control / Emissions Diagnosis Manual.[1] For the 7.3L diesel engine, refer to the 1996 Powertrain Control / Emissions Diagnosis Manual.[1]

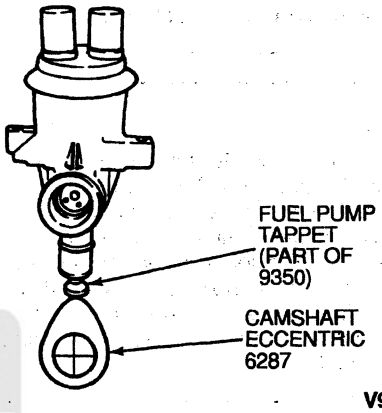

V9559-A

Fuel Gauge

Refer to Section 13-01 in the Body, Chassis Manual.

Fuel Tank Sending Unit, Diesel

The fuel tank sending unit supplies varying voltage readings to the fuel gauge to indicate the amount of fuel remaining in the fuel tank (9002). The voltage readings vary directly in proportion to the fuel level. The fuel tank sending unit is located in the fuel tank.

1 Can be purchased as a separate item.

Official Licensed Product
Ford Motor Company

DIAGNOSIS AND TESTING

Fuel Tank, Filters, Tubes and Fuel Pump

Refer to the 1996 Powertrain Control / Emissions Diagnosis Manual.[2] For the 7.3L diesel engine, refer to the 1996 Powertrain Control / Emissions Diagnosis Manual.[2]

REMOVAL AND INSTALLATION

Fuel Draining

Use Rotunda Diesel Fuel Storage Tanker 164-R3204 or equivalent to drain the fuel tank.

Fuel Filling

Expansion of fuel due to temperature increases, or overfilling ("topping off") can cause fuel overflow at the fuel tank filler cap (9030) when the vehicle is standing or the fuel tank filler cap is removed. To minimize this condition, it is recommended that the amount of fuel put in the fuel tank (9002) when filling be limited to the automatic pump shutoff. If vehicle has two fuel tanks, use fuel from both fuel tanks after fill-up to reduce fuel levels.

Fuel Tank(s), Steel Midship, F-250 Heavy Duty, F-350 and F-Super Duty Chassis Cab

NOTE: Since there are different midship fuel tanks (9002) which are removed and installed essentially the same way, follow steps and refer to appropriate illustration for details.

Removal

1. Disconnect battery ground cable (14301).
2. Using Rotunda Diesel Fuel Storage Tanker 164-R3204 or equivalent, drain fuel tank.
3. If equipped with skid plate, remove fasteners and remove skid plate assembly.
4. Disconnect fuel tank sending unit electrical connector.
5. Loosen clamps and disconnect fuel filler hose and overflow hose at fuel tank.
6. Position suitable jack under fuel tank.
7. Remove nuts and bolts and lower straps. If necessary, turn strap approximately 30 degrees and remove.
8. Lower fuel tank enough to gain access to fuel connections.
9. Disconnect fuel vapor hose and fill vent hose from vapor valve.
10. Disconnect fuel supply and return tubes according to instructions for steel push connectors in this section.
11. Remove fuel tank from vehicle.

Installation

1. Follow removal procedure in reverse order.
2. Tighten the fuel tank strap bolts and nuts to 30-40 N·m (22-30 lb-ft).
3. Tighten fuel tank bracket to frame nut to 21-29 N·m (15-21 lb-ft).
4. Tighten fuel tank skid plate bolts and nuts to 16-24 N·m (12-18 lb-ft).
5. NOTE: When the battery (10655) has been disconnected and reconnected, some abnormal drive symptoms may occur while the powertrain control module (PCM)(12A650) relearns its adaptive strategy. The vehicle may need to be driven 16 km (10 miles) or more to relearn the strategy.

   Connect battery ground cable.

Official Licensed Product

2 Can be purchased as a separate item.

REMOVAL AND INSTALLATION (Continued)

Steel Midship Fuel Tank, F-250 Heavy Duty, F-350 and F-Super Duty Chassis Cab, 133-, 136.8-, 155- and 160.8-Inch Wheelbase

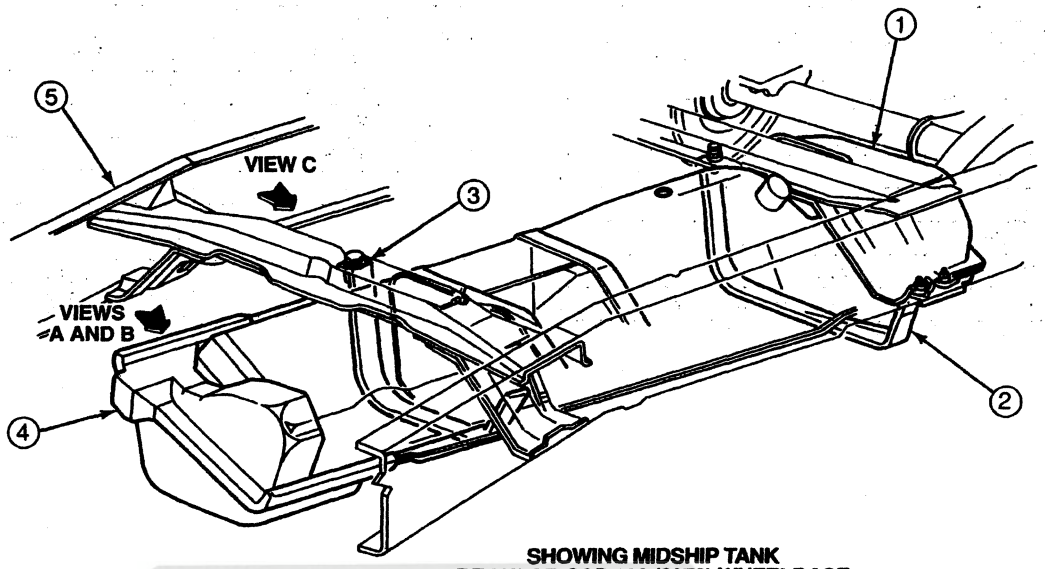

SHOWING MIDSHIP TANK
REGULAR CAB 133 (3378) WHEELBASE

Ford Motor Company Licensed Product

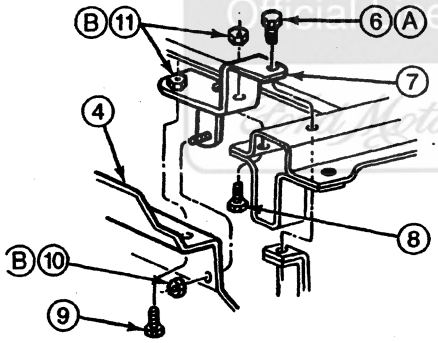

136.8-INCH WHEELBASE CHASSIS CAB
VIEW A

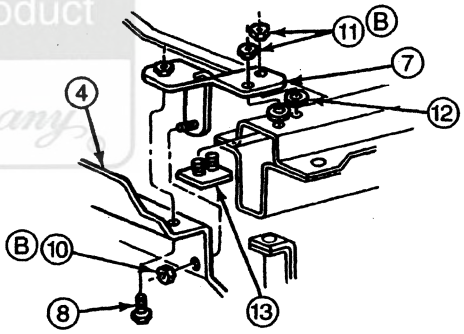

160.8-INCH WHEELBASE CHASSIS CAB
VIEW B

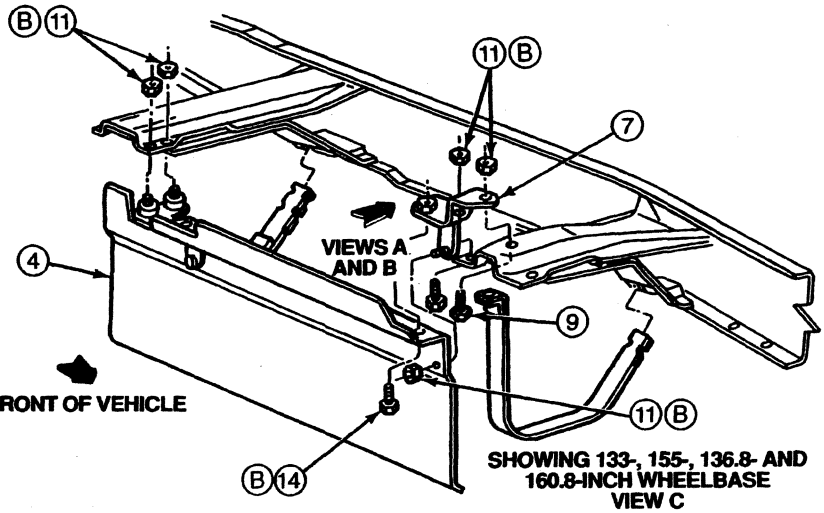

SHOWING 133-, 155-, 136.8- AND
160.8-INCH WHEELBASE
VIEW C

V9160-C

REMOVAL AND INSTALLATION (Continued)

Item	Part Number	Description
1	9002	Fuel Tank
2	9092	Fuel Tank Support Strap (Rear)
3	9092	Fuel Tank Support Strap (Front)
4	9K014	Shield
5	5005	Frame
6	N802253-S2	Bolt
7	9K037	Bracket
8	N606689-S2	Screw and Washer

(Continued)

Item	Part Number	Description
9	N605906-S36	Bolt
10	N803826-S56	Nut and Washer
11	N620481-S2	Nut
12	W623464-S2	Nut, Push-On
13	5R132	Bolt
14	N605906-S36	Bolt
A	—	Tighten to 30-40 N·m (22-30 Lb-Ft)
B	—	Tighten to 16-24 N·m (12-18 Lb-Ft)

Official Licensed Product
Ford Motor Company

REMOVAL AND INSTALLATION (Continued)

Steel Midship Fuel Tank, F-250 Heavy Duty, F-350 4x4, 133-, 136.8-, 155- and 160.8-Inch Wheelbase

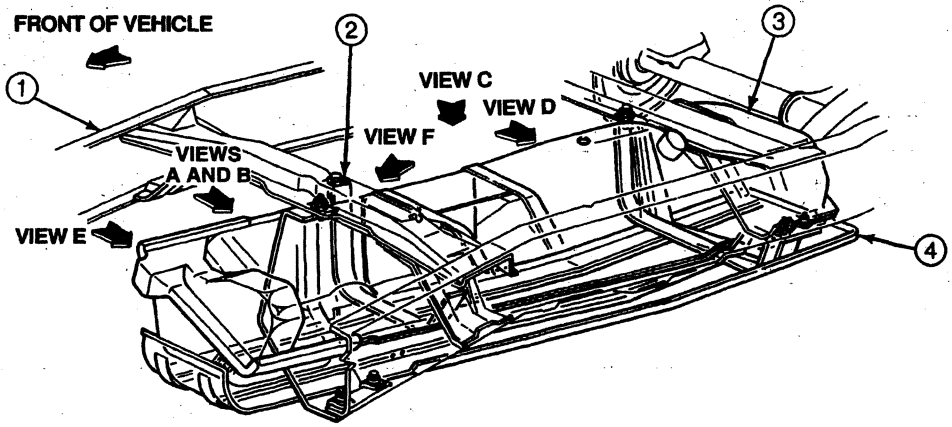

VIEW SHOWING MIDSHIP TANK

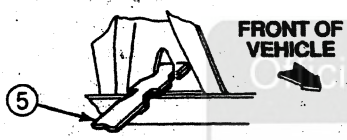

FOR 133-INCH (3378 MM) AND 155-INCH (3937 MM) WHEELBASE REGULAR CAB AND SUPERCAB
VIEW A

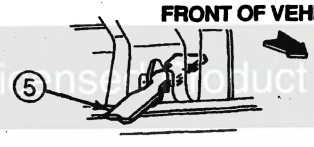

FOR 136.8-INCH (3475 MM) AND 160.8-INCH (4084 MM) WHEELBASE
VIEW A

EDGE OF SHIELD MUST LINE UP WITH RADIUS ON TANK AS SHOWN. DO NOT USE HAMMER OR MALLET WHEN INSTALLING SHIELD.

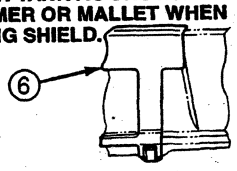

VIEW B

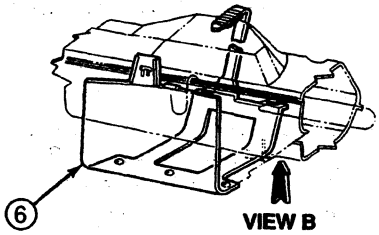

VIEW C

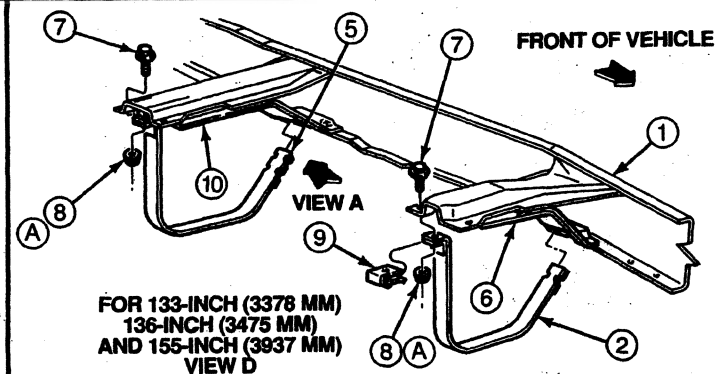

FOR 133-INCH (3378 MM) 136-INCH (3475 MM) AND 155-INCH (3937 MM)
VIEW D

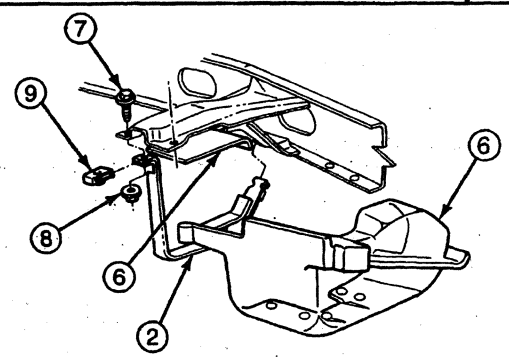

VIEW E

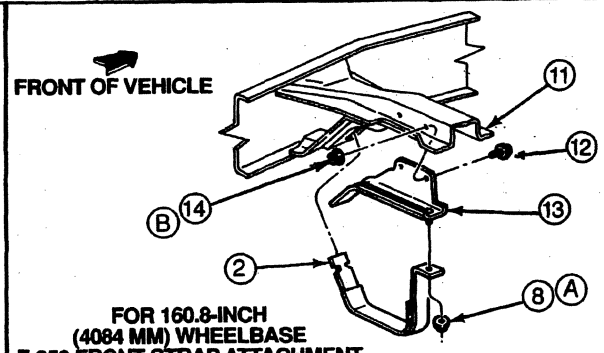

FOR 160.8-INCH (4084 MM) WHEELBASE F-350 FRONT STRAP ATTACHMENT
VIEW F

DV0132-A

REMOVAL AND INSTALLATION (Continued)

Item	Part Number	Description
1	5005	Frame
2	9092	Fuel Tank Support Strap
3	9002	Fuel Tank
4	9A148	Skid Plate
5	9092	Fuel Tank Support Strap
6	9K014	Shield
7	N802253-S2	Bolt
8	N620482-S2	Nut
9	N801107-S100	U-Nut

(Continued)

Item	Part Number	Description
10	9240	Insulator (Upper)
11	—	Crossmember, No. 3A (Part of 5005)
12	N605906-S2	Bolt
13	9065	Bracket
14	N620481-S2	Nut
A	—	Tighten to 30-40 N·m (22-30 Lb-Ft)
B	—	Tighten to 21-29 N·m (15-21 Lb-Ft)

Steel Midship Fuel Tank Skid Plate, F-250 Heavy Duty 4x4, F-350 4x4, 133-, 155- and 160.8-Inch Wheelbase

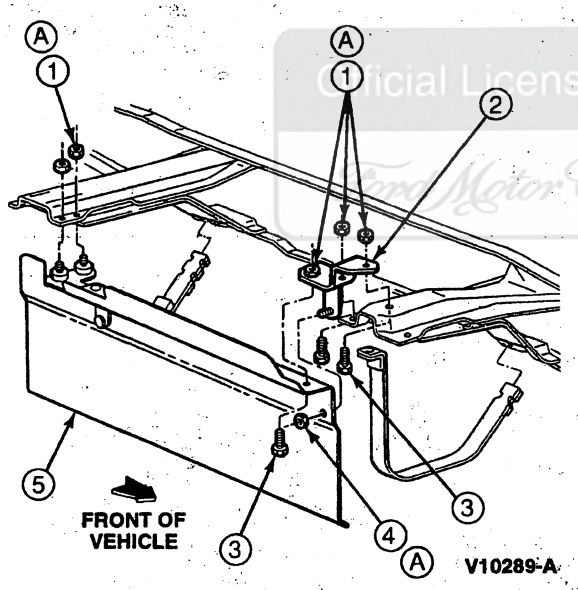

Item	Part Number	Description
1	N620481-S2	Nut, M8-1.25
2	9K037	Bracket Assy
3	N605906-S36	Bolt, M8-1.25
4	N803826-S60	Nut and Washer, M8-1.25
5	9K014	Skid Plate
A	—	Tighten to 16-24 N·m (12-18 Lb-Ft)

Fuel Tank(s), Plastic Midship, F-250 Heavy Duty and F-350 4x4

Removal

1. **WARNING: DISCONNECT THE BATTERY GROUND CABLES (14301) FROM BOTH BATTERIES (10655) PRIOR TO SERVICING THE FUEL SYSTEM. BODILY INJURY AND VEHICLE DAMAGE DUE TO POSSIBLE ELECTRICAL SPARKING AND POSSIBLE FIRE HAZARD CAN OCCUR.**
   Disconnect the battery ground cables on both batteries.
2. Using Rotunda Diesel Fuel Storage Tanker 164-R3204 or equivalent, drain fuel tank.
3. Remove skid plate and fuel tank heat shields (9A032).
4. Loosen fuel filler hose clamp at the fuel tank (9002) and disconnect the fuel filler hose.
5. Position suitable jack under fuel tank. Remove nuts from fuel tank support straps (9092) and lower fuel tank enough to gain access to hoses.
6. Disconnect the fuel tank sending unit wire at the fuel tank.
7. Disconnect the fuel tube push connect fittings at fuel tank sending unit.
8. Disconnect fuel vapor hose from fuel vapor valve.
9. Remove fuel tank from vehicle.

Installation

1. Install jack under fuel tank and raise fuel tank enough to start the tank neck into the filler hose.
2. Connect fuel vapor hose to fuel vapor valve.
3. Connect the fuel tube push connect fittings at the fuel tank sending unit.
4. Position and secure fuel filler hose on fuel tank filler neck. Make sure the inner hose is not twisted or kinked inside tank neck and filler pipe. Tighten hose clamp to 3-4 N·m (27-35 lb-in).
5. Connect the fuel tank sending unit wire.

Official Licensed Product Ford Motor Company

REMOVAL AND INSTALLATION (Continued)

6. Position fuel tank in vehicle and install front and rear fuel tank support straps. Tighten rear strap bolt to 30-40 N·m (22-30 lb-ft). Tighten front strap nut to 34-46 N·m (25-34 lb-ft).
7. Position fuel tank heat shield on fuel tank retaining strap studs and tighten retaining nuts to 16-24 N·m (12-18 lb-ft).
8. Position fuel tank support strap in vehicle and secure it to the frame (5005) with retaining bolts. Tighten to 16-24 N·m (12-18 lb-ft).
9. Position skid plate in vehicle and secure the skid plate and fuel tank support strap to frame with retaining bolts and nuts. Tighten to 16-24 N·m (12-18 lb-ft).
10. NOTE: When the battery ground cable has been disconnected and reconnected, some abnormal drive symptoms may occur while the powertrain control module (PCM)(12A650) relearns its adaptive strategy. The vehicle may need to be driven 16 km (10 miles) or more to relearn the strategy.

    Connect battery ground cables at both batteries.
11. Fill the fuel tank and check all connections for leaks.

Plastic Midship Fuel Tank, 4x4 with E4OD, 133- and 155-Inch Wheelbase

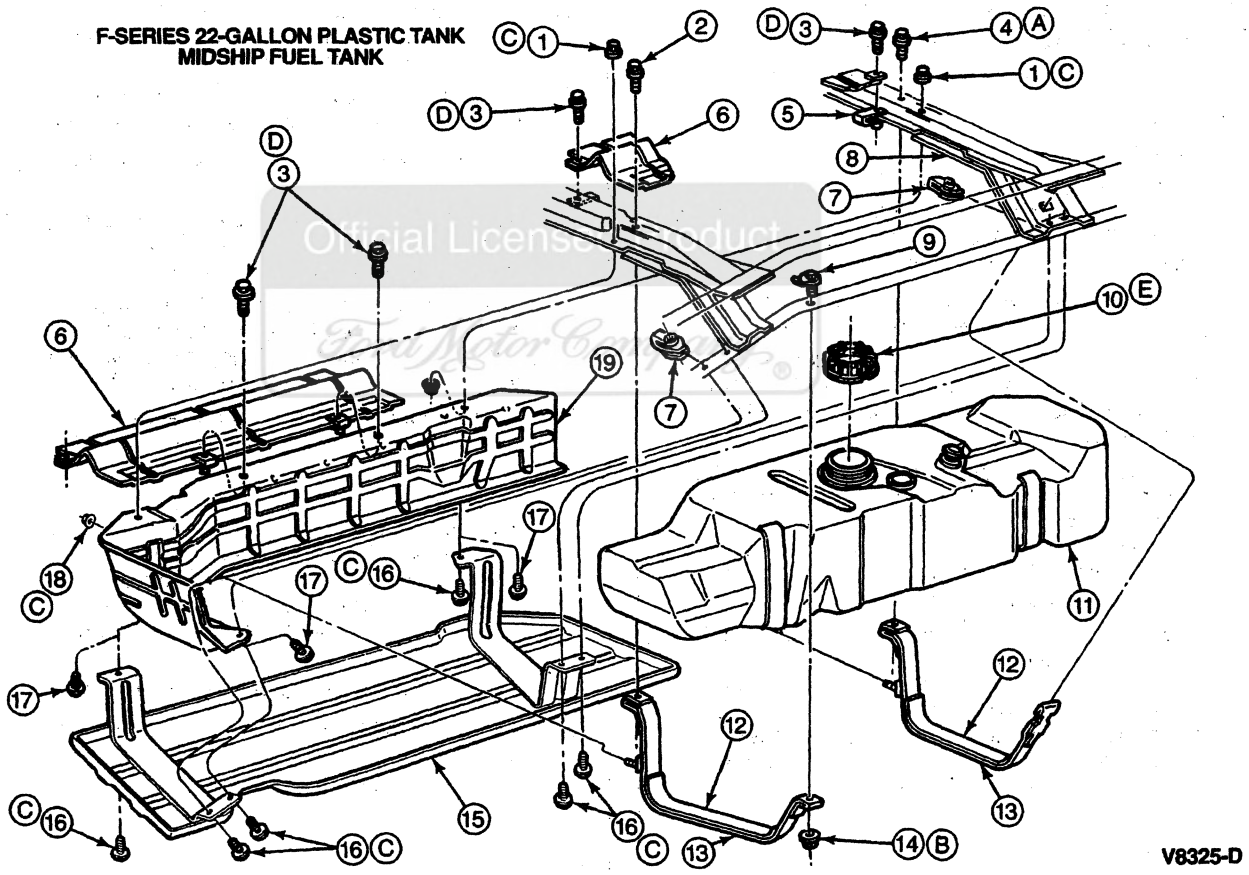

Item	Part Number	Description
1	N620481-S2	Nut
2	N802253-S2	Bolt
3	N605892-S2	Bolt
4	N802253-S2	Bolt
5	N801595-S53	U-Nut
6	9B100	Shield

(Continued)

Item	Part Number	Description
7	N804340-S2	U-Nut
8	9240	Insulator (Upper)
9	N805934-S2	Bolt
10	9A307	Fuel Tank Sending Unit Locking Retainer Ring
11	9002	Fuel Tank
12	9240	Insulator

(Continued)

REMOVAL AND INSTALLATION (Continued)

Item	Part Number	Description
13	9092	Fuel Tank Support Strap (Rear)
14	N620482-S2	Nut
15	9A148	Skid Plate
16	N605906-S2	Bolt
17	N605906-S2	Bolt
18	N620480-S36	Nut
19	9A032	Fuel Tank Heat Shield

(Continued)

Item	Part Number	Description
A	—	Tighten to 30-40 N·m (22-30 Lb-Ft)
B	—	Tighten to 34-46 N·m (25-34 Lb-Ft)
C	—	Tighten to 16-24 N·m (12-18 Lb-Ft)
D	—	Tighten to 11-15 N·m (8-10 Lb-Ft)
E	—	Tighten to 55-68 N·m (41-50 Lb-Ft)

Fuel Tank(s), Aft-of-Axle, F-250 Heavy Duty, F-350 and F-Super Duty Chassis Cab

Fuel tank installations are shown in the illustrations.

Removal

1. Raise the rear of the vehicle.
2. To avoid electrical sparking at the tank, disconnect the battery ground cables (14301) on both batteries (10655). Then disconnect the fuel tank sending unit wire at the fuel tank (9002).
3. Using Rotunda Diesel Fuel Storage Tanker 164-R3204 or equivalent, drain fuel tank.
4. Loosen the clamp on the fuel tank filler pipe (9034) at the fuel tank and disconnect the filler pipe hose. Disconnect the fill vent hose at the vapor valve.
5. If removing the metal-type fuel tank, support the fuel tank and remove the bolts retaining the tank supports to the frame (5005). Carefully lower the fuel tank. Finish removing the filler pipe and filler pipe vent hose if not possible in Step 5. Remove the fuel tank under the vehicle.
6. If removing the plastic-type fuel tank, support the fuel tank and remove the bolts retaining the combination skid plate and tank support to the frame. Carefully lower the fuel tank. Complete removing the filler pipe if not possible in Step 5. Remove the skid plate and fuel tank from under the vehicle. Disassemble the skid plate from the fuel tank.

Installation

1. Install new support strap insulation as required.
2. If installing the plastic-type fuel tank, preassemble the skid plate and fuel tank support straps (9092) to the fuel tank.
3. Raise the tank skid plate and fuel tank support (9053) and start the tank neck into the hose.
4. Connect the fuel tank sending unit wire to the sending unit.
5. Connect the fuel tube at the fuel tank sending unit and tighten the fuel filler hose clamps securely. Install the drain plug, if so equipped.
6. Position the fuel tank against the top fuel tank support straps or the frame and install the retaining bolts and nuts. Tighten the retaining bolts and nuts to 34-46 N·m (25-34 lb-ft).
7. Insert rubber inner tube inside filler neck and connect filler pipe hose. Tighten clamp to 3-4 N·m (27-35 lb-in).
8. NOTE: When the battery has been disconnected and reconnected, some abnormal drive symptoms may occur while the powertrain control module (PCM)(12A650) relearns its adaptive strategy. The vehicle may need to be driven 16 km (10 miles) or more to relearn the strategy.

   Connect both vehicle battery ground cables.
9. Fill the fuel tank and check all connections for leaks.
10. Lower the vehicle.

REMOVAL AND INSTALLATION (Continued)

Steel Aft-of-Axle Fuel Tank, F-250 Heavy Duty, F-350 and F-Super Duty Chassis Cab, Except F-350 with 136.8- and 160.8-Inch Wheelbase

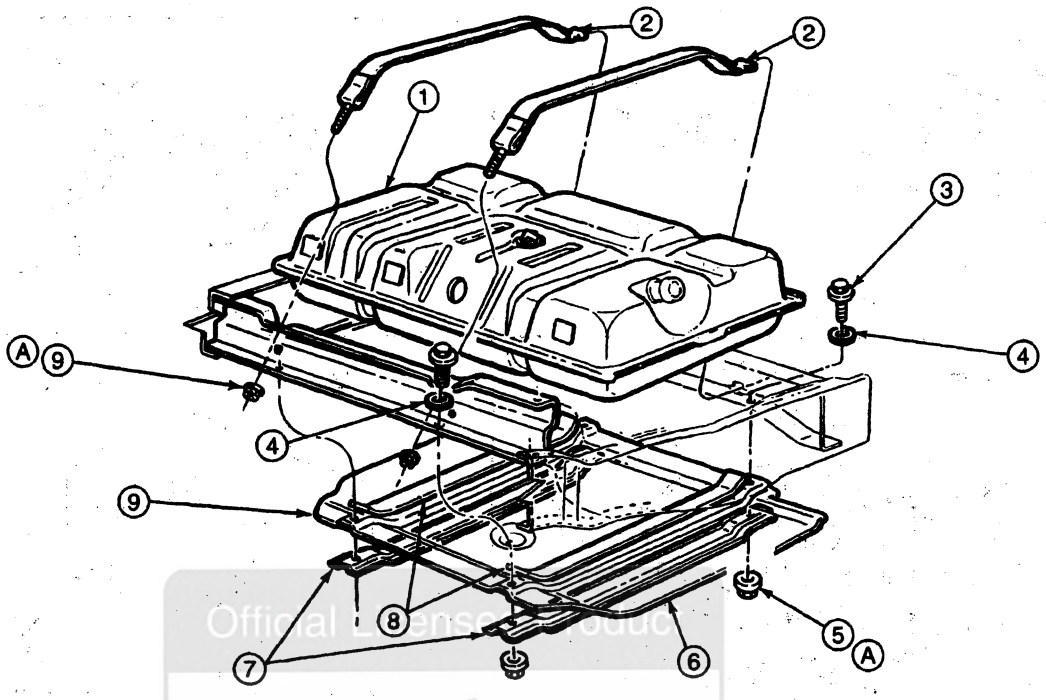

DV0133-A

Item	Part Number	Description
1	9002	Fuel Tank
2	9092	Fuel Tank Support Strap (Upper)
3	N801380-S100	Bolt
4	382873-S2	Washer
5	N620482-S2	Nut

(Continued)

Item	Part Number	Description
6	9C045	Stone Shield (LH)
7	9092	Fuel Tank Support Strap (Lower)
8	—	Insulator (Part of 9002)
9	34976-S36	Nut
A	—	Tighten to 34-46 N·m (25-34 Lb-Ft)

Official Licensed Product Ford Motor Company

REMOVAL AND INSTALLATION (Continued)

Plastic Aft-of-Axle Fuel Tank, F-350, 136.8- and 160.8-Inch Wheelbase

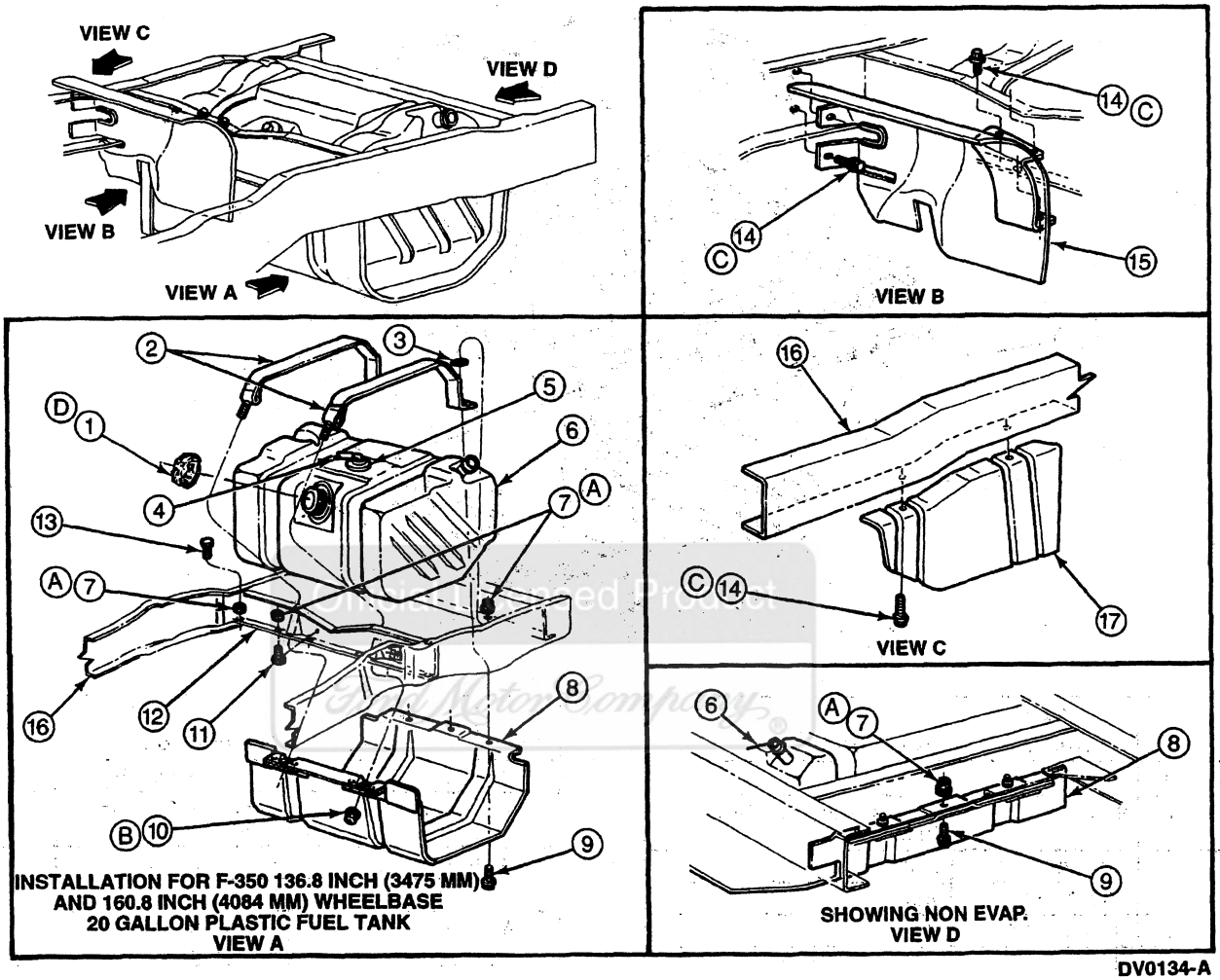

DV0134-A

Item	Part Number	Description
1	9A307	Fuel Tank Sending Unit Locking Retainer Ring
2	9092	Fuel Tank Support Strap
3	W623484-S2	Spring Washer
4	9B593	Vapor Valve and Hose Assy
5	9B076	Seal
6	9002	Fuel Tank
7	N620482	Nut, M10-1.5
8	9A148	Skid Plate
9	N605920-S2	Bolt, M10-1.5
10	379930-S2	Nut
11	56741	Bolt, M10-1.50
12	5037	Crossmember

(Continued)

Item	Part Number	Description
13	N605919-S2	Bolt
14	40949-S2	Screw
15	9A032	Fuel Tank Heat Shield
16	5005	Frame
17	9B100	Shield
A	—	Tighten to 34-46 N·m (25-34 Lb-Ft)
B	—	Tighten to 16-24 N·m (12-18 Lb-Ft) (Exposed Thread Length)
C	—	Tighten to 11-15 N·m (8-11 Lb-Ft)
D	—	Tighten to 54-75 N·m (40-55 Lb-In)

REMOVAL AND INSTALLATION (Continued)

Fuel Tank Support Straps

NOTE: Refer to specific fuel tank illustrations for reference.

Removal

1. Raise the vehicle on hoist.
2. Remove skid plate bolts and skid plate, if so equipped.
3. Position suitable jack under fuel tank (9002) for support.
4. Remove fuel tank support strap nuts.
5. Remove fuel tank support strap (9092).

Installation

1. Follow removal procedure in reverse order.

Fuel Tank Filler Pipe

Procedures are the same for aft-of-axle and midship fuel tank filler pipes (9034).

Removal

1. Disconnect battery ground cable (14301) and drain fuel to a level (approximately 3/4 full) below fuel tank filler connection by using Rotunda Diesel Fuel Storage Tanker 164-R3204 or equivalent.
2. Loosen clamp retaining filler pipe hose to fuel tank filler neck. Disconnect filler pipe hose, pulling along rubber inner tube from filler neck.
3. Disconnect fill vent hose at vapor valve.
4. Remove three screws retaining filler pipe neck to body / box fuel filler housing.
5. Remove fuel tank filler pipe from vehicle.
6. Remove hose and clamps. Replace cracked or leaking hoses or other damaged parts.

Installation

1. Position fuel tank filler pipe in vehicle.
2. Position clamp on filler pipe hose-to-filler pipe neck connection and insert rubber inner tube in filler neck. Make sure the inner tube is not kinked or twisted in the neck and in the outer filler hose.
3. Install three screws retaining filler pipe neck to body / box fuel filler housing. Tighten to 3-4 N·m (27-35 lb-in).

Ford Motor Company

Fuel Filler System, F-350 and F-Super Duty Chassis Cab

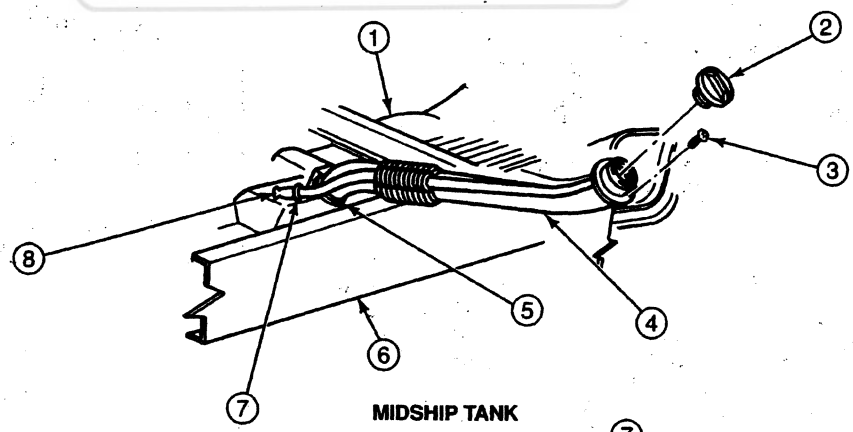

MIDSHIP TANK

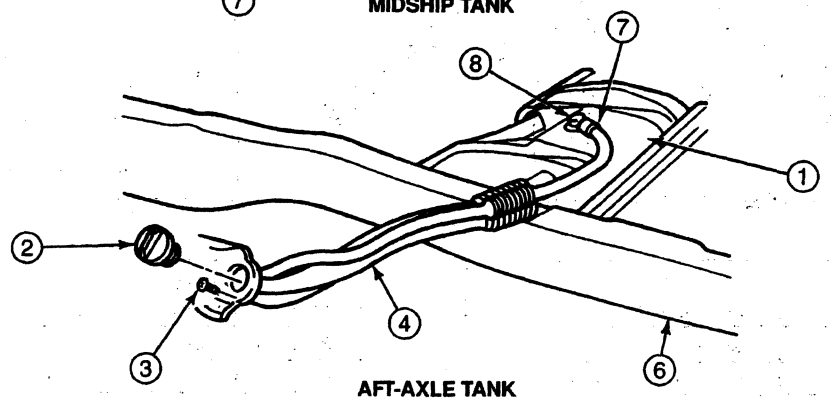

AFT-AXLE TANK

DV0135-A

REMOVAL AND INSTALLATION (Continued)

Item	Part Number	Description
1	9002	Fuel Tank
2	9030	Fuel Tank Filler Cap
3	N802826-555M	Screw
4	9034	Fuel Tank Filler Pipe

(Continued)

Item	Part Number	Description
5	383526-3	Clamp
6	5005	Frame
7	W700574-S300	Clamp
8	9B593	Vapor Valve and Hose Assy

4. Reconnect fill vent hose at vapor valve.
5. Adjust hose to obtain snug filler pipe installation. Tighten hose clamps to 3-4 N·m (27-35 lb-in). Make certain clamps are forward of flange on filler pipe to ensure a leakproof connection.
6. Fill fuel tank (9002) with fuel. Install fuel tank filler cap (9030) and check for leaks.
7. NOTE: When the battery (10655) has been disconnected and reconnected, some abnormal drive symptoms may occur while the powertrain control module (PCM)(12A650) relearns its adaptive strategy. The vehicle may need to be driven 16 km (10 miles) or more to relearn the strategy.

   Reconnect battery ground cable.

Fuel Filler System, Single Rear Wheel, F-250 Heavy Duty, F-350

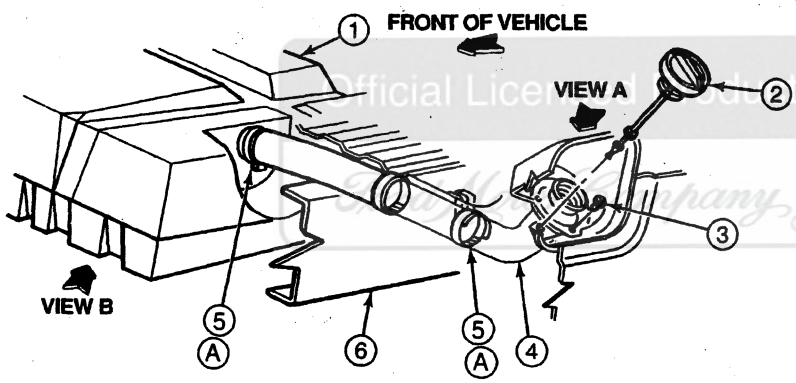

STYLESIDE WITH AFT-OF-AXLE FUEL TANK

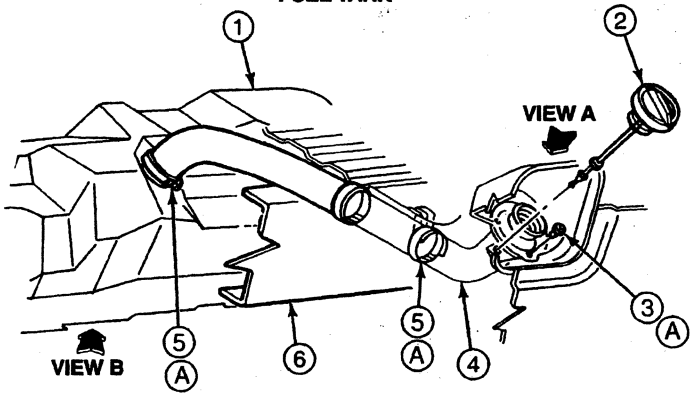

STYLESIDE WITH MIDSHIP FUEL TANK

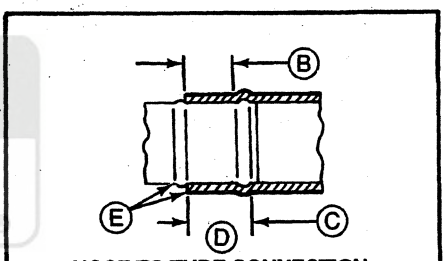

HOSE TO TUBE CONNECTION

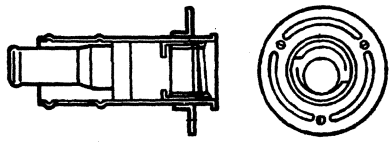

FOR DIESEL FUEL PIPE ASSEMBLY VIEW A

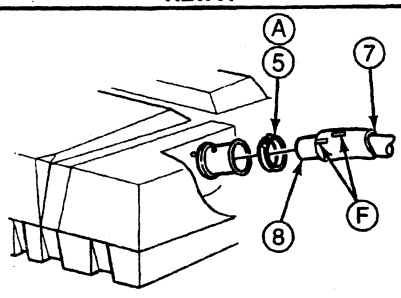

TYPICAL HOSE INSTALLATION VIEW B

V5584-H

Item	Part Number	Description
1	9002	Fuel Tank
2	9030	Fuel Tank Filler Cap

(Continued)

Item	Part Number	Description
3	N802826-S55M	Screw
4	9034	Fuel Tank Filler Pipe

(Continued)

REMOVAL AND INSTALLATION (Continued)

Item	Part Number	Description
5	383526-S	Clamp
6	5005	Frame
7	—	Outer Hose (Part of 9002)
8	—	Inner Hose (Part of 9002)
A	—	Tighten to 3-4 N·m (27-35 Lb-In)
B	—	Install Clamp in This Area (Beyond First Bead and Before Hose End)

(Continued)

Item	Part Number	Description
C	—	For Pipes Without Secondary Bead
D	—	23.0 mm Engagement
E	—	Install Hose Within 1.5 mm of Secondary Positioning Bead Where Applicable
F	—	Paint Stripes

Fuel Filler System, Dual Rear Wheel Flareside, F-250 Heavy Duty, F-350

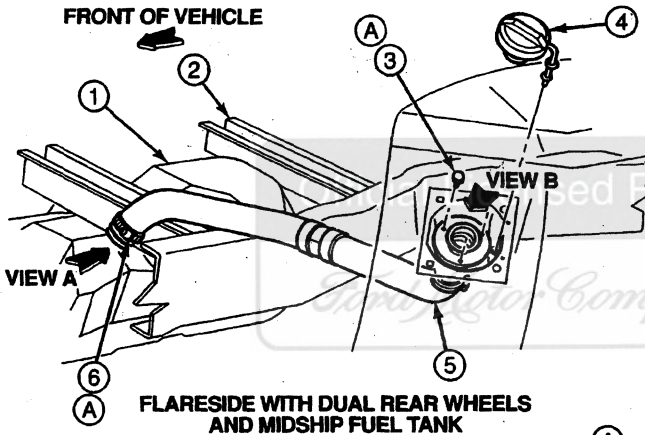

FLARESIDE WITH DUAL REAR WHEELS AND MIDSHIP FUEL TANK

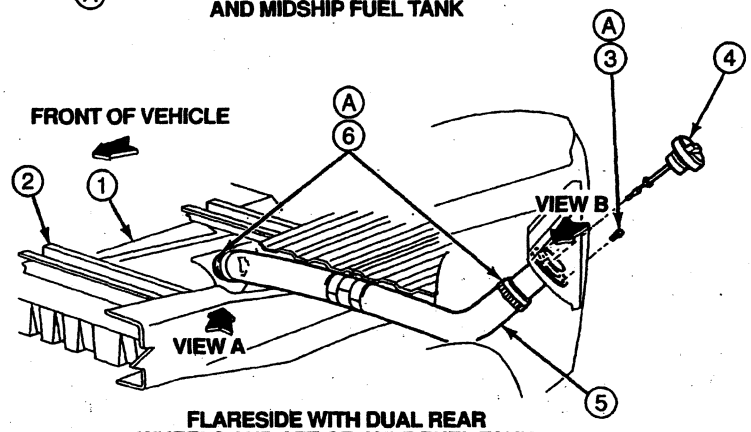

FLARESIDE WITH DUAL REAR WHEELS AND AFT-OF-AXLE FUEL TANK

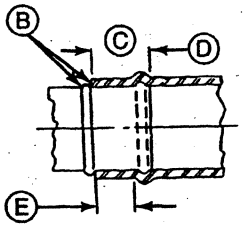

TUBE/HOSE CONNECTION

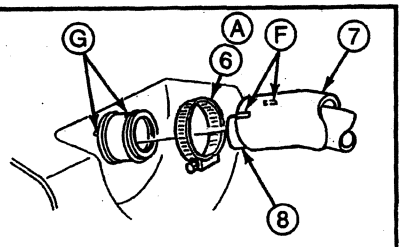

VIEW A

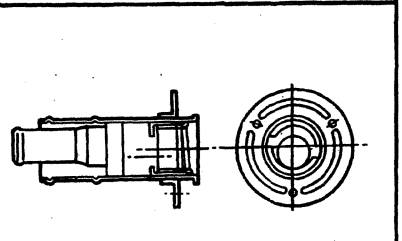

FOR DIESEL FUEL PIPE ASSEMBLY VIEW B

DV0136-A

Item	Part Number	Description
1	9002	Fuel Tank
2	5005	Frame
3	N802826-S55M	Screw
4	9030	Fuel Tank Filler Cap
5	9034	Fuel Tank Filler Pipe

(Continued)

Item	Part Number	Description
6	383526-S	Clamp
7	—	Outer Hose (Part of 9002)
8	—	Inner Hose (Part of 9002)
A	—	Tighten to 3-4 N·m (27-35 Lb-In)

(Continued)

REMOVAL AND INSTALLATION (Continued)

Item	Part Number	Description
B	—	Install Hose Within 1.5 mm (0.06 Inch) of Secondary Positioning Bead Where Applicable
C	—	23.0 mm (0.90 Inch) Engagement
D	—	For Pipes Without Secondary Bead
E	—	Install Clamp in This Area (Beyond First Bead and Before Hose End)
F	—	Paint Stripes
G	—	Install Hose with Stripes in Line with Two Dimples on Fuel Tank

(Continued)

Sending Unit, Fuel Tank (Metal Locking Ring)

SPECIAL SERVICE TOOL(S) REQUIRED

Description	Tool Number
Fuel Tank Sender Wrench	T74P-9275-A

Removal

1. Remove the fuel tank (9002).
2. Position fuel tank on a workbench and remove any dirt that has accumulated around the sender so that it will not enter the fuel tank.
3. NOTE: On some aft-of-axle fuel tanks, the fuel tank sending unit is held in place by screws.

   Turn the fuel sending unit locking ring counterclockwise with Fuel Tank Sender Wrench T74P-9275-A and remove locking ring.
4. Remove the fuel tank sending unit from the fuel tank.
5. Remove seal gasket and discard.

Installation

1. Clean the fuel tank sending unit mounting flange and the fuel tank mounting surface and seal ring groove.
2. Put a light coating of Premium Long-Life Grease XG-1-C or -K or equivalent grease meeting Ford specification ESA-M1C75-B on a new seal ring to hold it in place during assembly and install it in the fuel ring groove.
3. Install fuel tank sending unit assembly carefully. Be sure that the tabs of the sender are positioned into slots of the fuel tank. Make sure ring remains in place.
4. NOTE: On aft-of-axle fuel tanks where the fuel gauge sending unit is held in place by bolts, tighten the sending unit retaining screws to 9-11 N·m (80-97 lb-in).

   Hold the fuel tank sending unit and sealing gasket in place, install and rotate the locking ring clockwise until the stop is against the retainer ring tab.

   Install fuel tank.

Fuel Tank Sending Unit, Secured with Screws

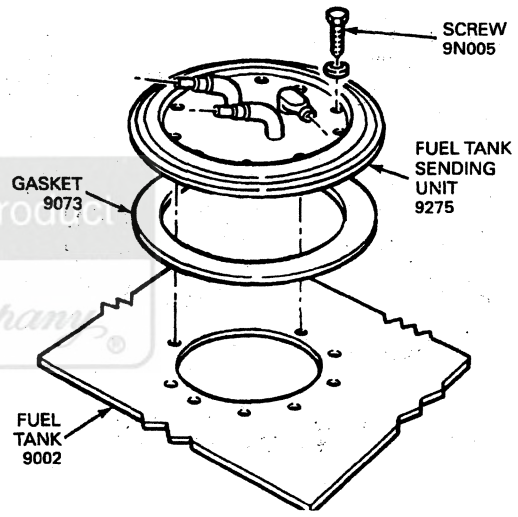

Sending Unit, Fuel Tank (Plastic Locking Ring)

The fuel tank sending unit removal and installation procedures for units equipped with plastic locking rings are the same as for units equipped with metal locking rings. The plastic locking ring on these units can be removed with a band-type oil filter wrench or equivalent by turning counterclockwise. When installing the plastic locking ring, tighten ring to 54-75 N·m (40-55 lb-ft).

Fuel Pump

Removal

1. Remove the turbocharger. Refer to Section 03-04D.

REMOVAL AND INSTALLATION (Continued)

2. Remove the fuel tube banjo fitting bolt at fuel pump (9350).

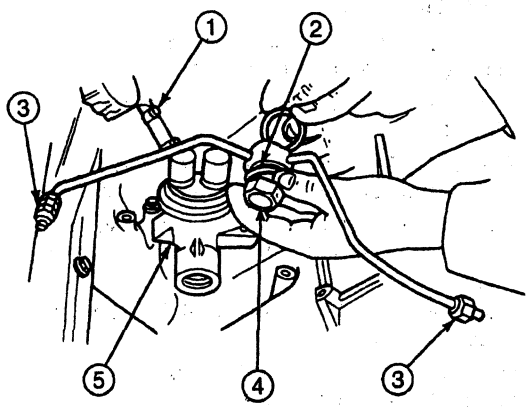

A22255-A

Item	Part Number	Description
1	9H334	Fuel Inlet Hose
2	—	Gasket (Part of 9350)
3	—	Fuel Tube Nuts (2 Req'd) (Part of 9350)
4	—	Fuel Supply Banjo Bolt (Part of 9350)
5	9350	Fuel Pump

3. Remove the fuel tube fittings at the rear of the cylinder heads.

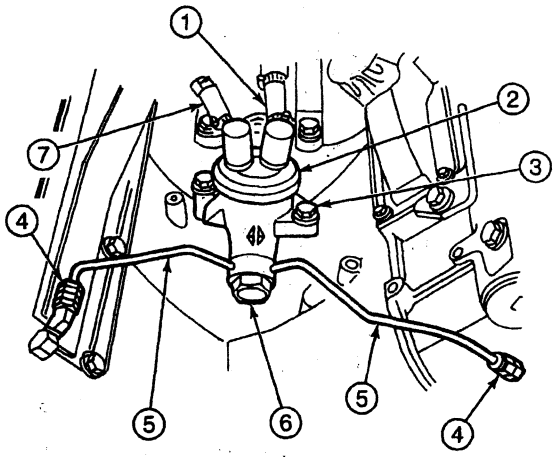

A22256-A

Item	Part Number	Description
1	9H334	Fuel Outlet Hose
2	9350	Fuel Pump
3	—	Fuel Pump Mounting Bolts (2 Req'd) (Part of 9350)
4	—	Fuel Supply Tube Nuts (2 Req'd) (Part of 9350)
5	—	Fuel Rail Supply Tube (Part of 9350)
6	—	Fuel Tube Banjo Bolt (Part of 9350)
7	9H334	Fuel Inlet Hose

4. Remove the fuel tube assembly.
5. Loose the three hose clamps at the fuel pump fittings.
6. Disconnect the water drain hose at the fuel filter.
7. Remove the fuel filter bolts and position the fuel filter forward.
8. Remove the two fuel pump bolts and lift the fuel pump up out of the crankcase bore.
9. Remove the fuel pump tappet from the crankcase bore.

Installation

1. Rotate the engine (6007) so that fuel pump cam eccentric is on the base circle to ease the installation of the fuel pump.
2. Install the fuel pump tappet in the base of the fuel pump.

Ford Motor Company Official Licensed Product

REMOVAL AND INSTALLATION (Continued)

3 Replace the O-ring on the fuel pump base.

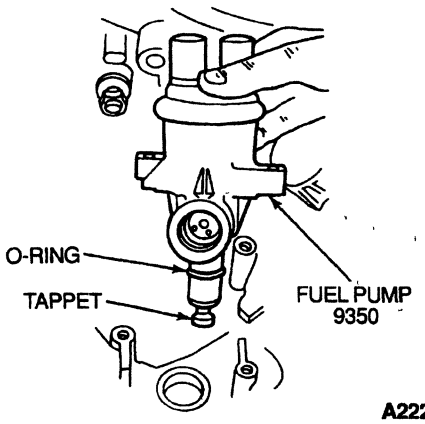

4. Install the fuel pump and fuel pump bolts. Tighten bolts sequentially in a crisscross pattern. Tighten fuel pump bolts to 26-37 N·m (19-27 lb-ft).
5. Install the fuel filter and connect the water drain hose.
6. Connect the three fuel hoses at the front of the fuel pump.
7. Tighten the fuel hose clamps.
8. Install the fuel filter retaining bolts. Tighten bolts to 33-52 N·m (24-38 lb-ft).
9. Install the fuel tube assembly with new seal rings at the rear of the fuel pump.
10. Loosely install the fuel tube fittings at the rear of the cylinder heads.
11. Install the fuel tube banjo fitting bolt at the fuel pump, tighten pump bolt to 20-24 N·m (15-18 lb-ft).
12. Install the turbocharger. Refer to Section 03-04D.
13. Tighten all fittings securely.

Fuel/Water Separator

Removal

1 Remove all hose connections attached to fuel filter assembly.

2 Place a suitable container at the end of the drain hose to catch the fuel and open filter drain

3 Remove water drain hose from fuel filter assembly.

4. Remove fuel outlet hose, located between fuel pump (9350) and filter housing.
5. Remove fuel return hose from fuel pressure regulating valve.
6. Remove two fuel supply hoses connecting regulator block to cylinder head fuel rails.
7. Loosen clamp at fuel pump end on hose connecting fuel filter to inlet of high pressure stage of fuel pump.
8. Unclip wiring harness from right side of filter housing.
9. Disconnect electrical connectors from water in fuel sensor and fuel heater.
10. Remove two capscrews securing fuel filter base to crankcase and remove fuel filter.
11. Using a screwdriver or bar, remove fuel filter cap. Fuel filter element will come out with cap.
12. Remove and discard bevel gasket. Carefully clean mating surfaces.
13. Press in on fuel filter element locking tabs to separate element from cap.

Installation

1. NOTE: The engine (6007) will not run if the fuel filter is not correctly installed in housing.

   Apply a coating of clean diesel fuel to new bevel gasket and install onto fuel filter housing gland.
2. Install new fuel filter element onto cap. Place new fuel filter element and cap into fuel filter housing. Allow fuel to soak into fuel filter element. Tighten cap onto fuel filter housing until cap contacts the aluminum housing.
3. Mount fuel filter base to crankcase with two capscrews. Tighten to 33-52 N·m (24-38 lb-ft).

Ford Motor Company Licensed Product

REMOVAL AND INSTALLATION (Continued)

4. Install all hose connections to filter assembly in reverse order of removal.

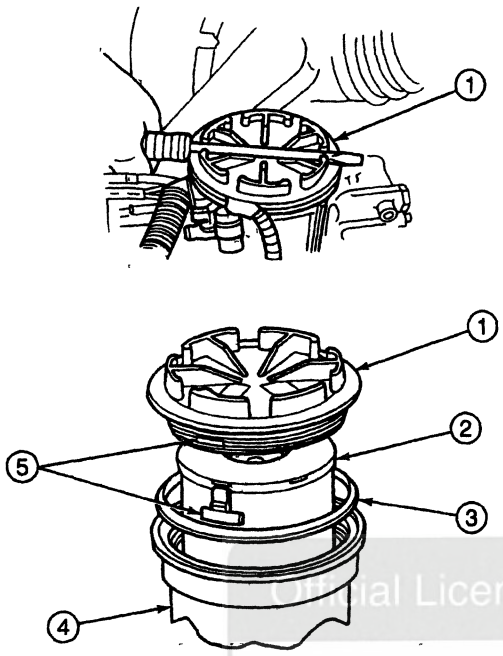

V9560-A

Item	Part Number	Description
1	9K523	Fuel Filter Cap
2	9155	Fuel Filter Element
3	9K342	Fuel Filter Bevel Cut Gasket
4	9K601	Fuel Filter Housing and Gland
5	9N184	Fuel Filter Element and Cap Locking Tabs

Fuel Return Tubes, Metal

NOTE: Refer to Push Connect Fittings in this section while servicing fuel tubes. Refer to the appropriate illustrations in this section for proper fuel tube location and orientation.

The 7.3L diesel engine (6007) uses a combination of flexible and steel tubing fuel supply and return tubes. The fuel tube assemblies are secured to the body rails with clips.

A damaged section of tubing longer than 305 mm (12 inches) can be cut out of the existing tube assembly and replaced by a comparable service tubing section, spliced into the tube assembly by means of connecting hoses and retaining clamps. A damaged section of tubing shorter than 305 mm (12 inches) can be cut out of the tube assembly and replaced by a length of service hose and two retaining clamps.

All replacement hoses must be cut to a length and inside diameter that will ensure proper clamp retention.

Removal

1. Disconnect the damaged tube at both ends.
2. Remove the tube from the holding clips along the frame.
3. Remove all damaged hose and tube sections.

Installation

1. Cut a new section of steel tubing to approximately the same length and inside diameter as the section to be replaced. Allow extra length for flaring the ends of the tubing where required. Square the ends of the cut tubing with a file.
2. Ream the inside edges of the cut tubing with the reamer blade on the tube cutter. Be sure metal chips are removed from inside the tube(s). Double flare the ends of the cut tubing, as required.
3. Bend the tube section to conform to the contour of the original tube. Cut an ample length of hose to form a coupling between the ends of the fuel tubes. Connect the hose couplings to the tubing and install the retaining clamps.
4. Position the tube assemblies in the clips. Connect the tubes and check for leaks.

Official Licensed Product
Ford Motor Company

REMOVAL AND INSTALLATION (Continued)

Fuel and Vapor Return Tubes, Plastic

CAUTION: Ford-approved nylon fuel tubing is made from material that has been tested and proven to be acceptable for use with commercially available fuels. It is also resistant to most environmental conditions. Avoid using alternate tubing materials. Use of non-approved tubing could pose a hazard in service.

CAUTION: Plastic fuel tube must not be serviced using hose and hose clamps. Push connect fittings cannot be serviced except to replace the retaining clips. Should the plastic tubes, push connect fittings or mating tube ends become damaged and leak, approved service parts must be used to service the fuel tubes.

CAUTION: The fuel tubes can be damaged by torches, welding sparks, grinding and other operations that involve heat and high temperatures. If any repair or service operation will be used that involves heat and high temperatures, locate all fuel system components, especially the plastic fuel tubes to be certain they will not be damaged. It is recommended that the plastic fuel tubes be removed from the vehicle if a torch or high heat producing equipment is to be used for service in the following areas:

- **exhaust or suspension components in proximity to fuel tubes**
- **underbody frames, rails and crossmembers (left side)**
- **dash panel, under vehicle or inside the passenger compartment (lower left side)**

Engine Fuel Tube

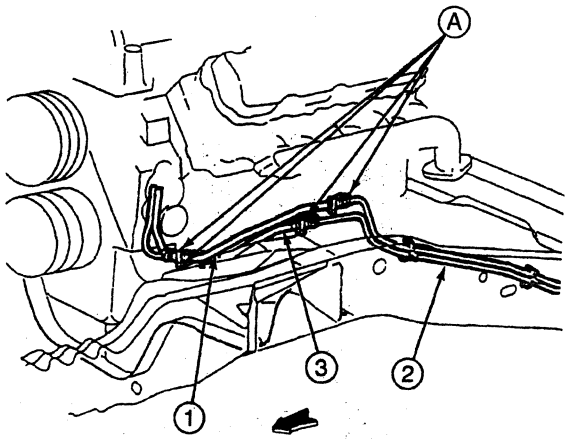

V10023-B

Item	Part Number	Description
1	9S273	Fuel Tube Jumper (Blue)
2	9J338	Fuel Supply and Return
3	9S274	Fuel Tube Jumper (Gray)
A	—	Close Redundant Clips

Official Licensed Product
Ford Motor Company

Rear Fuel Tube, F-250 Heavy Duty, F-350 and F-Super Duty Chassis Cab, 7.3L Diesel Engine with 136.8- and 160.8-Inch Wheelbase

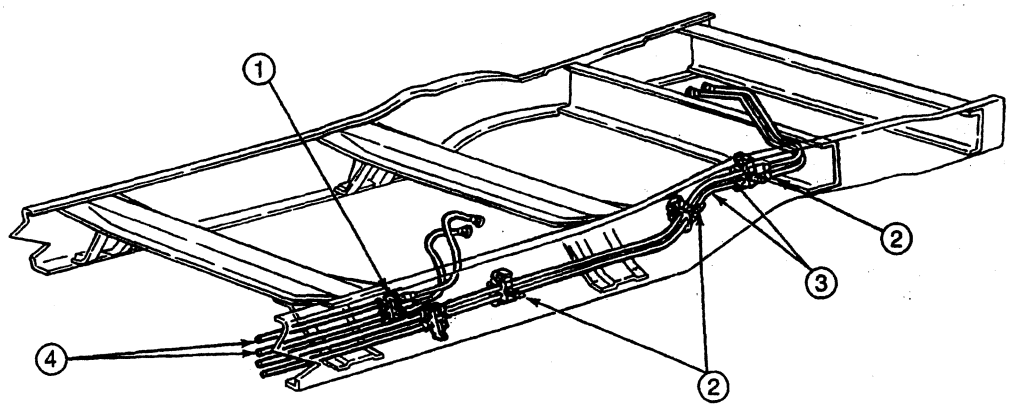

DV0247-A

REMOVAL AND INSTALLATION (Continued)

Item	Part Number	Description
1	N802769-S	Double Clip
2	9F276	Triple Clip (3 Locations)

(Continued)

Item	Part Number	Description
3	9J337	Rear Supply and Return Tube
4	9H334	Tube Assy, Midship

Rear Fuel Tube, F-250 Heavy Duty, F-350 and F-Super Duty Chassis Cab, 133- and 155-Inch Wheelbase, Typical

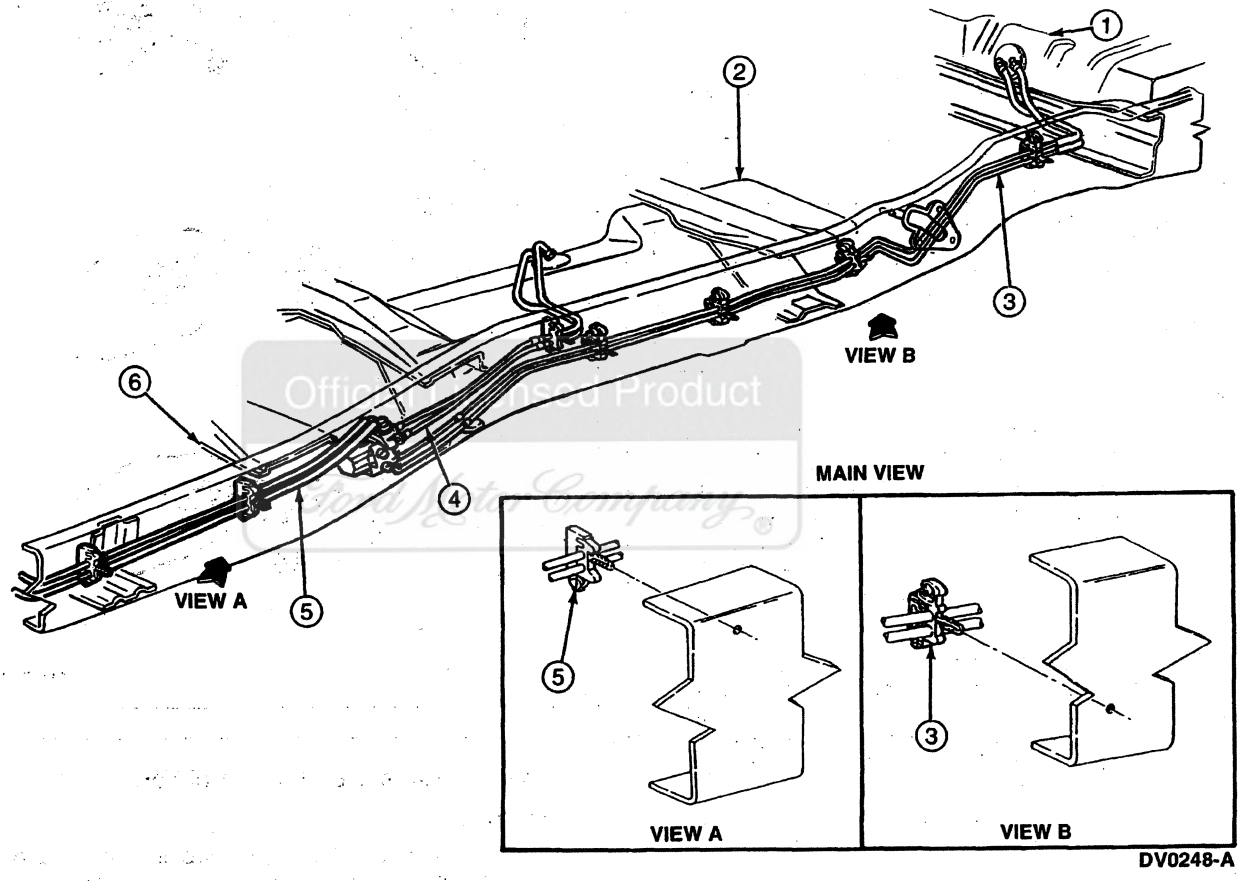

Item	Part Number	Description
1	9002	Fuel Tank
2	9002	Fuel Tank, Midship
3	9J337	Rear Fuel Supply and Return Tube

(Continued)

Item	Part Number	Description
4	9H334	Dual Fuel Supply and Return Tube
5	9J338	Tube Assy, (Front)
6	5030	Crossmember (Model Dependent)

Push Connect Fittings

Push connect fittings for 7.3L diesel systems have two sizes for 9.5-mm (3/8-inch) and 7.9-mm (5/16-inch) tubing.

Disconnect all push connect fittings from components (sender, six-way valve) prior to component removal. The push connect fittings that connect flexible fuel tubes to the fuel tank sender often cannot be disconnected until the fuel tank (9002) is partially lowered, just before removing the fuel tank completely.

REMOVAL AND INSTALLATION (Continued)

Typical Push Connect Fittings

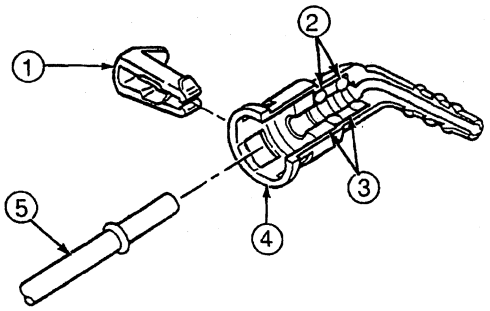

PUSH CONNECT V4780-E

Item	Part Number	Description
1	N802239-S	Clip
2	—	O-Rings (Part of 9J337)
3	—	Spacers (Part of 9J337)
4	—	Body (Part of 9J337)
5	9J337	Fuel Supply Tube

Removal

1. Inspect the visible internal portion of fitting for dirt accumulation. If more than a light coating of dust is present, clean the fitting before disassembly.
2. Some adhesion between the seals in the fitting and tubing will occur with time. To separate, twist the fitting on the tube, then push and pull the fitting until it moves freely on the tube.
3. **CAUTION: Do not use any tools.**

   Remove hairpin-type clip from fitting by first bending the shipping tab downward so that it will clear the body. Next (using hands only), spread the two clip legs about 3.0 mm (1/8 inch) each to disengage the body and push the legs into the fitting. Complete removal is accomplished by lightly pulling from the triangular end of the clip and working it clear of the tube and fitting.
4. **CAUTION: Do not use any tools.**

   Grasp the fitting and hose assembly and pull in an axial direction to remove the fitting from the tube.
5. When fitting is removed from the tube end, inspect the fitting and tube for any internal parts that may have been dislodged from the fitting. Any loose internal parts should be immediately installed, using the mating tube to insert the parts.

Installation

1. It is recommended that the original retention clip not be reused in the fitting. To install the new clip, insert clip into any two adjacent openings with the triangular portion pointing away from the fitting opening. Install clip to fully engage the body (legs of hairpin clip locked on outside of body). Piloting with an index finger is necessary.
2. Before installing the fitting on the tube, wipe tube end with a clean cloth. Inspect the inside of the fitting to make sure it is free of dirt or obstructions.
3. To install the fitting onto the tube, align the fitting and tube axially and push the fitting onto the tube end. When the fitting is engaged, a definite click will be heard. Pull on fitting to make sure it is fully engaged.

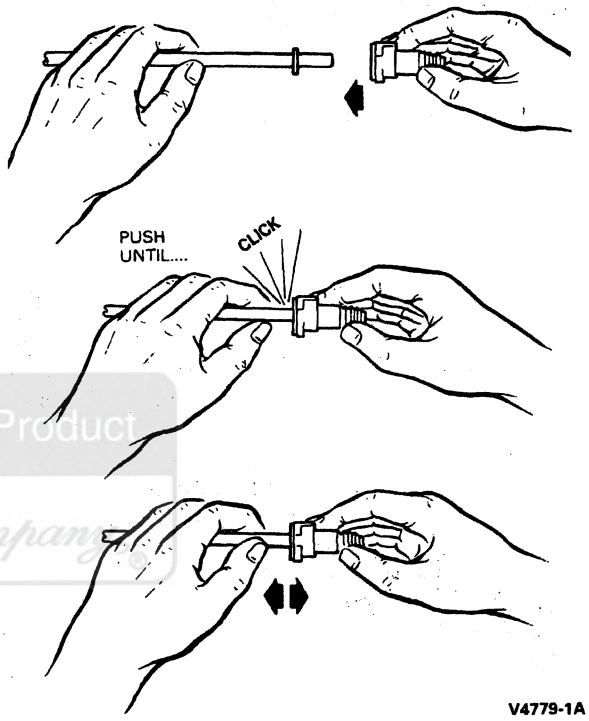

V4779-1A

Official Licensed Product
Ford Motor Company

Selector Valve, Auxiliary Fuel Tank

Removal

1. Disconnect battery ground cables (14301) and remove the fuel tubes from the valve as outlined.
2. Remove electrical connector.
3. Remove the two bolts mounting the selector valve.

Installation

1. Follow removal procedure in reverse order.
2. Tighten selector valve mounting bolts to 12-16 N·m (9-12 lb-ft).

REMOVAL AND INSTALLATION (Continued)

Fuel Tank Selector Valve, Typical

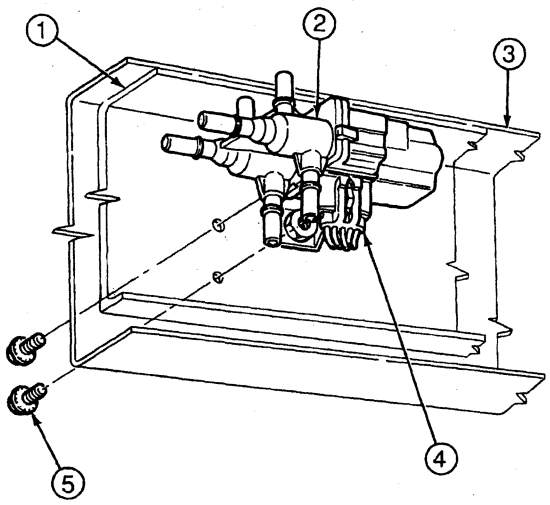

V4819-D

Item	Part Number	Description
1	—	Frame Doubler (F-350 Chassis Cab Only) (Part of 5005)
2	9F271	Six-Port Fuel Tank Selector Valve
3	5005	Frame
4	—	Electrical Connector (Part of 14405 Wiring Assy)
5	N605905	Bolt

Fuel Filter/Heater/Water Separator Drain Procedure

WARNING: THE VEHICLE MUST BE STOPPED WITH THE ENGINE OFF WHEN DRAINING THE FILTER BOWL. FUEL CAN IGNITE IF SEPARATOR IS DRAINED WHILE THE ENGINE IS RUNNING OR VEHICLE IS MOVING.

CAUTION: Diesel fuel can damage asphalt and other surfaces. Always place a drain pan under the separator to collect the fuel and dispose properly.

NOTE: The filter bowl must be drained at 8,000 km (5000 mile) intervals according to the maintenance schedule. At this service interval, if the warning light is not glowing, look at the drained fluid to determine when clear diesel fuel is flowing. Stop draining the filter bowl as soon as clear diesel fuel appears.

1. Stop the vehicle and shut off the engine (6007).
2. Open the hood. Place an appropriate container under the filter bowl drain to be located at front corner of engine (refer to the appropriate illustrations in this section) to collect water/fuel.
3. Open filter bowl drain valve by turning counterclockwise (as viewed from bottom). Allow to drain for approximately 25 seconds or until clean fuel is observed. Close drain valve by turning clockwise until firmly seated.
4. Verify that the fuel drain is closed and remove the container from under the vehicle and properly dispose of contents. Close the hood.
5. Restart the engine and check WATER IN FUEL indicator light. The light should not glow. If it continues to glow, have fuel system checked and repaired.

CLEANING AND INSPECTION

Fuel Tubes, Filter and Water Separator

Fuel Tubes

If fuel tubes are suspected of contamination or leaks, inspect tubes for cracks and fittings for leaks. Inspect tubes for kinks or pinched areas. Replace any tubes that are damaged. If fuel tube contains contaminated fuel, flush with clean diesel fuel, drain fuel filter and inspect filter element.

Fuel Tanks

Fuel tanks (9002) do not require special cleaning procedures and may be steam-cleaned and/or serviced using standard procedures. After steaming, allow them to thoroughly air dry. Replace dual tank strap bolts. Remove fuel tank sending unit before cleaning tank.

SERVICE PROCEDURES

Fuel System Pressure Relief

1. **CAUTION: Fuel supply tubes on vehicles with fuel injected engines will remain pressurized for long periods of time after engine shutdown. The pressure must first be relieved. Read all cautionary notes prior to relieving pressurized fuel system.**

   CAUTION: Before removing fuel tank filler cap (9030), turn fuel tank filler cap 1/4 to 3/4 turn counterclockwise and wait for tank pressure to relieve. Personal injury can result if fuel tank filler cap is removed without pressure relieved fully.

   Remove fuel tank filler cap to relieve any pressure in the tank.
2. When servicing the fuel tubes, loosen the fuel fitting to allow any residual fuel tube pressure to be relieved.

Fuel System, Pressurized

Fuel and Vapor Return Tubes

CAUTION: Diesel fuel tubes are a combination of stainless steel tubing, rubber hose, and Teflon® tube with a stainless steel braid cover. The materials have been tested and proven to be acceptable for use with commercially available fuels. They are also resistant to most environmental conditions. Avoid using alternate tubing materials. Use of non-approved tubing can pose a hazard in service.

CAUTION: Plastic fuel tubes must not be repaired using hose and hose clamps. Push connect fittings cannot be serviced except to replace the retaining clips. Should the Teflon® tubes or push connect fittings become damaged and leak, the part must be replaced.

Push Connectors, Nylon

1. NOTE: Remove protective caps on end of tube immediately before installation to minimize risk of contamination. Fuel tube must not hang from the chassis unsupported.

   NOTE: Damaged push connectors must be discarded and replaced with new push connectors. If only retaining clip is damaged, replace clip.

   Relieve fuel system pressure. Refer to Service Procedures, Fuel System Pressure Relief. Read cautionary note prior to relieving pressurized fuel system. If necessary, drain fuel tank (9002) Refer to Fuel Draining in the Removal and Installation portion of this section.
2 Disconnect damaged push connector. Be sure to break the tab before removing retaining clip.
3. Select proper size replacement push connector and Ford approved rubber fuel hose
4. Install hose clamp and proper barbed connector on rubber hose end and tighten clamp
5. Check that underbody clips are properly securing fuel tubes.
6. Fill fuel tank, start engine (6007) and check for fuel leaks.

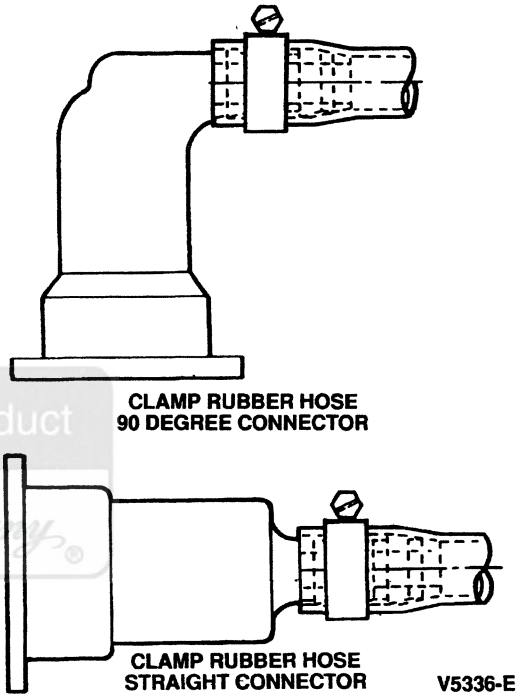

Push Connect Tube Ends, Steel

1. Using a tube cutter, remove the damaged push connect tube end at a convenient distance from the end. Allow for adequate room to tighten a union with a wrench.
2. Choose a proper replacement push connect tube end.
3. If required, form the new tube end to the same shape as the damaged tube end that was removed.
4. Select the proper size union and attach the new steel tube end to the original tube.
5. Clean off the steel tube end and replace the push connector onto the tube. (A new retainer clip is recommended.)
6. Check that the underbody clips are properly securing the fuel tubes.

SERVICE PROCEDURES (Continued)

7. Start engine (6007) and check for leaks.

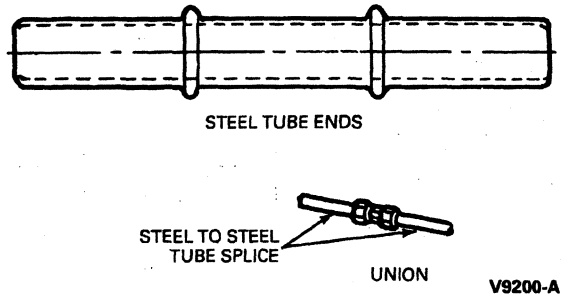

SPECIFICATIONS

Fuel System Specifications

CAPACITY

Model				
Series	Wheelbase mm (In)	Body Style	Location	Advertised Tank Cap. Refill Liters (Gal)
F-250 Heavy Duty (4x2)	3378 (133.0)	Reg. Cab	Midship Aft/Axle	72 (19) 69 (18.2)
F-250 Heavy Duty (4x2)	3526 (138.8)	Super Cab	Midship Aft/Axle	72 (19) 69 (18.2)
F-250 Heavy Duty (4x2)	3937 (155.0)	Super Cab	Midship Aft/Axle	72 (19) 69 (18.2)
F-250 Heavy Duty (4x4)	3378 (133.0) w/o E4OD	Reg. Cab/ Chassis Cab	Midship[a] Aft/Axle[a]	72 (19) 69 (18.2)
F-250 Heavy Duty (4x4)	3937 (155.0)	Super Cab	Midship[b] Aft/Axle[b]	72 (19) 69 (18.2)
F-350 (4x2) and (4x4)	3378 (133.0)[c]	Reg. Cab/ Chassis Cab	Midship Aft/Axle[a]	72 (19) 69 (18.2)
F-Super Duty (4x2)	3475 (136.8)	Chassis Cab/ FSD	Midship Aft/Axle[a]	72 (19) 69 (18.2)
F-Super Duty (4x2)	4084 (160.8)	Chassis Cab/ FSD	Midship Aft/Axle[a]	72 (19) 69 (18.2)
F-350	3937 (155.0)	Crew Cab	Midship Aft/Axle	72 (19) 69 (18.2)
F-250, F-350 (4x4)	3378 (133.0) with E4OD	Reg. Cab/ Chassis Cab	Midship[a] Aft/Axle	87 (22) 69 (18.2)

a Plastic tank.
b With R.P.O. skid plate.
c 4x4 without E4OD and all 4x2.

FUEL SUPPLY PUMP

Engine Liter (cid)	Static Pressure kPa (psi)[a]	Mounting Bolts N·m (Lb-Ft)	Fuel Lines to Pump N·m (Lb-Ft)
7.3L (444)	207-482 (30-70)	26-37 (19-27)	20-24 (15-18)

a On engine with temperatures normalized and at normal curb idle speed, transmission neutral.

SPECIFICATIONS (Continued)

PUSH CONNECT RETAINER PART NUMBERS

N805526-S190, 3/8 Dia.
N805528-S190, 5/16 Dia.

LUBRICANT/ADHESIVE/CLEANER SPECIFICATIONS

Description	Part Number	Ford Specification
Premium Long-Life Grease	XG-1-C or -K	ESA-M1C75-B

TORQUE SPECIFICATIONS

Description	N·m	Lb-Ft	Lb-In
Fuel Pump Mounting Bolts — All	26-37	19-27	—
Fuel Pump Outlet Connection — All	20-24	15-18	—
Fuel Return Tube Clamp at Fuel Supply Pump — All	1.6-2.2	—	15-19
Fuel Tank Selector Valve Mounting Bolts — All	12-16	9-12	—
Stone Shield Mounting Nuts, Steel Aft-of-Axle Fuel Tank, F-250 Heavy Duty, F-350 and F-Super Duty Chassis Cab	34-46	25-34	—
Strap Nuts, Plastic Aft-of-Axle Fuel Tank, F-350	16-18	12-13	—
Skid Plate Nuts, Plastic Aft-of-Axle Fuel Tank, F-350	34-46	25-34	—
Shield to Frame Screw, Plastic Aft-of-Axle Fuel Tank, F-350	11-15	8-11	—
Fuel Tank Sending Unit Locking Retainer Ring, Plastic Aft-of-Axle Tank, F-350	54-75	40-55	—
Front Strap Nut, Plastic Midship Fuel Tank	34-46	25-34	—
Rear Strap Bolt, Plastic Midship Fuel Tank	30-40	22-30	—
Heat Shield to Fuel Tank Strap Nuts, Plastic Midship Fuel Tank	16-24	12-18	—
Skid Plate Bolts and Nuts, Plastic Midship Fuel Tank, 4x4	16-24	12-18	—
Heat Shield to Frame Bolts	11-15	8-11	—
Strap Bolts and Nuts, Steel Midship Fuel Tank, 4x2 and 4x4	30-40	22-30	—

(Continued)

TORQUE SPECIFICATIONS (Cont'd)

Description	N·m	Lb-Ft	Lb-In
Fuel Tank Skid Plate Bolts and Nuts, Steel Midship Fuel Tank, 4x2	16-24	12-18	—
Fuel Tank Strap Bracket, Steel Midship Fuel Tank, 4x4	21-29	15-21	—
Fuel Tank Skid Plate Bolts, Steel Midship Fuel Tank, 4x4	16-24	12-18	—
Fuel Filler Hose Clamp	3-4	—	27-35
Filler Pipe Neck to Body Screws, F-250 Heavy Duty, F-350 and F-Super Duty Chassis Cab	3-4	—	27-35
Filler Pipe Neck to Support Screws, F-Super Duty Motorhome Chassis	17-28	13-21	—
Fuel Tank Sending Unit Retaining Screws	9-11	—	80-97
Fuel Tank Sending Unit Plastic Locking Ring, Plastic Midship Tank	55-68	41-50	—
Fuel Filter Base Retaining Screws	33-52	24-38	—

SPECIAL SERVICE TOOLS/EQUIPMENT

SPECIAL SERVICE TOOLS REQUIRED

Tool Number/ Description	Illustration
T74P-9275-A Fuel Tank Sender Wrench	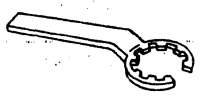 T74P-9275-A

SPECIAL SERVICE TOOLS DESIRED

Tool Number	Description
D84P-9275-A	Fuel Tank Sender Wrench

ROTUNDA EQUIPMENT

Model	Description
164-R3204	Diesel Fuel Storage Tanker

Official Licensed Product Ford Motor Company

SECTION 10-02 Accelerator Pedal and Linkage

SUBJECT	PAGE
VEHICLE APPLICATION	10-02-1
DESCRIPTION AND OPERATION	
Accelerator Pedal and Linkage	10-02-1
DIAGNOSIS AND TESTING	
Accelerator Pedal and Linkage	10-02-1
Inspection and Verification	10-02-1
Pinpoint Tests	10-02-2
Symptom Chart	10-02-1
REMOVAL AND INSTALLATION	
Accelerator Cable Bracket	10-02-6
Accelerator Cable, F-250 Heavy Duty, F-350 and F-Super Duty	10-02-3
REMOVAL AND INSTALLATION (Cont'd.)	
Accelerator Cable, F-Super Duty Motorhome	10-02-5
Accelerator Pedal and Sensor Assembly, Diesel Engine	10-02-3
Accelerator Pedal and Shaft	10-02-6
ADJUSTMENTS	
Accelerator Cable	10-02-11
SPECIFICATIONS	10-02-11

VEHICLE APPLICATION

F-250 Heavy Duty, F-350 and F-Super Duty

DESCRIPTION AND OPERATION

Accelerator Pedal and Linkage

The throttle is controlled by an accelerator cable (9A758) and a pedal assembly. The accelerator pedal must travel smoothly from the idle to the wide-open throttle positions. Hesitation on return and prevention of return to the idle position must not occur. Surrounding components such as wiring, hoses, sound insulator and floor covering must not contact the sliding inner member of the cable or the accelerator pedal assembly.

Engine speed is controlled by two sensors that are attached to the accelerator pedal (no cables are used on the 7.3L diesel engine). The first sensor, which maintains idle speed, is the idle validation switch. The second sensor is the accelerator pedal position sensor, which operates in a manner similar to a throttle position sensor. As the accelerator pedal travels through its range of operation, the two sensors send signals to the powertrain control module (PCM)(12A650) to indicate the amount of fuel delivery that is required for the demand. The accelerator pedal must travel smoothly from the idle to the wide-open throttle positions. Hesitation on return or prevention of return to the idle position must not occur. Surrounding components such as wiring, hoses, sound insulator and floor covering must not contact the accelerator pedal assembly.

On vehicles equipped with speed control, the speed control cable is also attached to the throttle body lever. For further information concerning the speed control system, refer to Section 10-03.

DIAGNOSIS AND TESTING

Accelerator Pedal and Linkage

Inspection and Verification

Verify the customer's concern by inspecting the condition. Check for any resistance in accelerator pedal action. Inspect the accelerator pedal if a high engine idle speed condition exists. After inspection and verification, refer to the symptom chart for the condition, and perform the appropriate action to correct the condition.

Symptom Chart

Based on the condition, the following steps are to be used for diagnosis following disconnection of the accelerator cable (9A758) from the throttle body lever. (If vehicle is equipped with speed control, disconnect the speed control actuator cable from the throttle body lever.)

DIAGNOSIS AND TESTING (Continued)

ACCELERATOR PEDAL AND THROTTLE BODY DIAGNOSIS

Condition	Possible Source	Action
• Accelerator Pedal Is Hard to Push Down or Has a Rough, Raspy or Sticky Feel	• Full pedal travel is restricted. • Worn or damaged cable. • Restricted pedal operation.	• GO to Pinpoint Test A.
• High Engine Idle Speed	• Cable ball socket extends beyond the throttle lever ball stud. • Restricted foot pedal operation. • Worn or damaged cable.	• REFER to the throttle body diagnosis procedure in the appropriate section of the 1996 Powertrain Control/Emissions Diagnosis Manual.[1] • ADJUST carpet, mat or wiring as required. • GO to Pinpoint Test B.

Pinpoint Tests

NOTE: Accelerator cable must not be lubricated and is not serviceable.

PINPOINT TEST A: ACCELERATOR PEDAL AND CABLE CHECK

Test Step		Result ▶	Action to Take
A1	CHECK FOR PEDAL RESTRICTION		
	• On gasoline engines, disconnect the cable end from the throttle body. • On gasoline engines, make sure the disconnected end of the cable does not come in contact with any of the surrounding parts. • Operate the pedal by hand. • **Is the full pedal travel to WOT restricted?**	Yes ▶ No ▶	ADJUST insulator or trim items as required. GO to **A2** for gasoline engines, GO to **A3** for diesel engines.
A2	CHECK FOR SMOOTH PEDAL MOVEMENT, GASOLINE ENGINES		
	NOTE. Accelerator cable should not be lubricated and is not serviceable. • Cable end should remain disconnected. • Operate the pedal by foot. • **Is the pedal operation smooth?**	Yes ▶ No ▶	REFER to the throttle body diagnosis procedures in the appropriate section in the 1996 Powertrain Control/Emissions Diagnosis Manual.[1] CHECK the foot pedal assembly for free operation or CHECK for worn or damaged cable GO to **B1**.
A3	CHECK FOR SMOOTH PEDAL MOVEMENT, DIESEL ENGINES		
	• Operate the pedal by foot. • **Is the pedal operation smooth?**	Yes ▶ No ▶	System is functioning properly TEST the system for normal operation. REPLACE the accelerator pedal and sensor assembly.

PINPOINT TEST B: CABLE WEAR OR DAMAGE DIAGNOSIS

Test Step		Result ▶	Action to Take
B1	CHECK CABLE BINDING IN HOUSING		
	• Disconnect the cable end from ball stud at throttle body • Make sure the disconnected end of the cable does not come in contact with any of the surrounding parts. • From inside the vehicle, pull the wire through its entire travel. • **Does it feel rough, sticky or restricted?**	Yes ▶ No ▶	REPLACE as required. USE appropriate part with base No 9A758. Cable is functioning properly. REFER to the throttle body diagnosis procedures in the appropriate section in the 1996 Powertrain Control/Emissions Diagnosis Manual[1] or ADJUST carpet as required GO to **B2**

1 Can be purchased as a separate item

DIAGNOSIS AND TESTING (Continued)

PINPOINT TEST B: CABLE WEAR OR DAMAGE DIAGNOSIS (Continued)

Test Step		Result	Action to Take
B2	CHECK CABLE RETURN		
	• Let go of the wire after pulling on it. • **Does the wire stick or hesitate to return to its original position?**	Yes ▶	REPLACE as required. USE appropriate part with base No. 9A758.
		No ▶	Cable is functioning properly. REFER to the throttle body diagnosis procedures in the appropriate section in the 1996 Powertrain Control / Emissions Diagnosis Manual[2] or ADJUST carpet as required. GO to **B3.**
B3	CHECK RETURN SPRING		
	• Compress the spring at the throttle body end of the cable. • Observe the cable as it returns to the original position. • **Does the spring stick or fail to return to the original position at a rapid rate?**	Yes ▶	REPLACE as required. USE appropriate part with base No. 9A758.
		No ▶	Cable is functioning properly. REFER to the throttle body diagnosis procedures in the appropriate section in the 1996 Powertrain Control / Emissions Diagnosis Manual[2] or ADJUST carpet as required.

Official Licensed Product Ford Motor Company

REMOVAL AND INSTALLATION

Accelerator Cable, F-250 Heavy Duty, F-350 and F-Super Duty

WARNING: NO SURROUNDING ENGINE COMPARTMENT COMPONENTS SUCH AS WIRING OR HOSES CAN CONTACT ANY MOVING MEMBER OF THE ACCELERATOR CONTROLS. ALL VEHICLES ASSEMBLED ARE TO BE CHECKED FOR RETURN TO IDLE AS FOLLOWS: NO PERCEPTIBLE HESITATION OR PREVENTION OF RETURN TO THE IDLE POSITION CAN OCCUR DURING SLOW REMOVAL OF THE FOOT FROM THE ACCELERATOR PEDAL AND SHAFT (9725) STARTING AT THE FULLY PRESSED WIDE-OPEN THROTTLE (WOT) POSITION.

Removal

1. Remove accelerator cable (9A758) from accelerator pedal and shaft.
2. Remove accelerator cable from dash panel. The accelerator cable is held to the instrument panel (04320) with two screws.
3. Remove the accelerator control splash shield (9E766) from the accelerator cable bracket (9723), if so equipped.
4. Remove accelerator cable from ball stud and cable mounting accelerator cable bracket.

Installation

1. NOTE: Some new accelerator cables come with a plastic core protector over the end that goes through the instrument panel. Do not remove core protector until accelerator cable has been installed in instrument panel. Refer to the appropriate illustration for accelerator cable-to-instrument panel holding screw tightening specifications.

   Follow removal procedure in reverse order.
2. Fully seat accelerator cable grommets into slotted hole in accelerator pedal and shaft and dash reinforcement hole.

Accelerator Pedal and Sensor Assembly, Diesel Engine

Removal

1. Disconnect the electrical connectors from the idle validation switch and the accelerator pedal position sensor.
2. Remove the nuts holding the accelerator pedal and sensor assembly to the instrument panel (04320).
3. Remove the accelerator pedal and sensor assembly from the instrument panel.

2 Can be purchased as a separate item.

REMOVAL AND INSTALLATION (Continued)

Accelerator Pedal Installation, Diesel

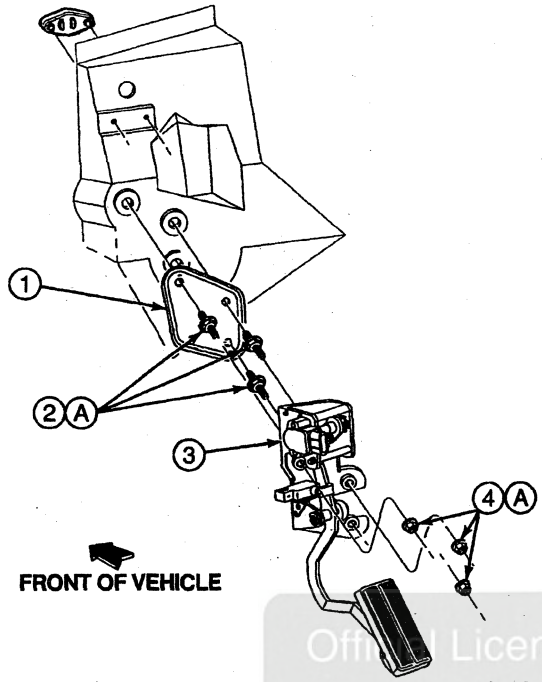

V9552-A

Item	Part Number	Description
1	9N809	Accelerator Control Plate
2	N808382-S426	Stud

(Continued)

Item	Part Number	Description
3	9F836	Accelerator Pedal and Sensor Assy
4	N620481-S2	Nuts
A	—	Tighten to 21-29 N·m (15-21 Lb-Ft)

Installation

1. Position accelerator pedal and sensor assembly to instrument panel and install accelerator pedal and sensor assembly lower nut hand-tight.
2. Install and tighten the accelerator pedal and sensor assembly nuts to 21-29 N·m (15-21 lb-ft).
3. Connect the electrical connectors to the idle validation switch and the accelerator pedal position sensor.

Official Licensed Product
Ford Motor Company

Accelerator Pedal Sensors

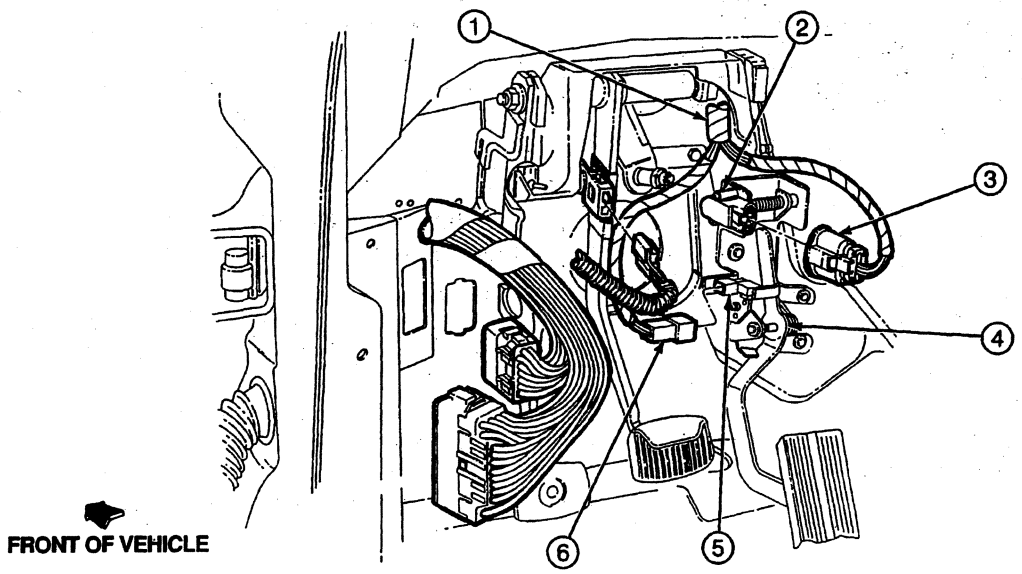

V9551-A

REMOVAL AND INSTALLATION (Continued)

Item	Part Number	Description
1	14401	Main Wiring
2	—	Accelerator Pedal Position Sensor (Part of 9F836)
3	—	Pedal Position Sensor Electrical Connector (Part of 14401)
4	9F836	Accelerator Pedal and Sensor Assy
5	—	Idle Validation Switch (Part of 9F836)
6	—	Idle Validation Switch Electrical Connector (Part of 14401)

(Continued)

Accelerator Cable, F-Super Duty Motorhome

WARNING: NO SURROUNDING ENGINE COMPARTMENT COMPONENTS SUCH AS WIRING OR HOSES CAN CONTACT ANY MOVING MEMBER OF THE ACCELERATOR CONTROLS. ALL VEHICLES ASSEMBLED ARE TO BE CHECKED FOR RETURN TO IDLE AS FOLLOWS: NO PERCEPTIBLE HESITATION OR PREVENTION OF RETURN TO THE IDLE POSITION CAN OCCUR DURING SLOW REMOVAL OF THE FOOT FROM THE ACCELERATOR PEDAL AND SHAFT (9725) STARTING AT THE FULLY DEPRESSED WIDE-OPEN THROTTLE (WOT) POSITION.

Removal

1. Remove accelerator cable (9A758) from accelerator pedal and shaft.
2. Remove cable grommet from instrument panel (04320) and remove accelerator cable. Some accelerator cables are held to the instrument panel with screws.
3. Remove the accelerator control splash shield (9E766) from the accelerator cable bracket (9723), if so equipped.
4. Remove accelerator cable from ball stud and accelerator cable bracket.

Accelerator Pedal Installation, Gasoline, Typical

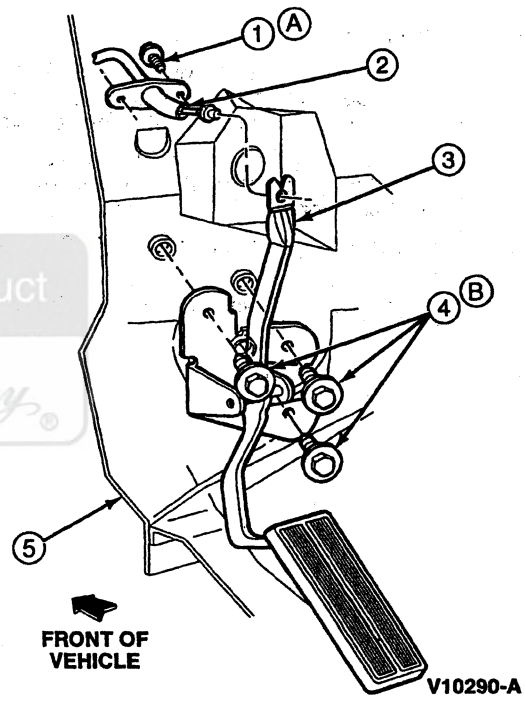

Item	Part Number	Description
1	N610959-S2	Screw
2	9A758	Accelerator Cable
3	9725	Accelerator Pedal and Shaft
4	N801921-S2	Screw and Washer
5	04320	Instrument Panel
A	—	Tighten to 2-3 N·m (18-26 Lb-In)
B	—	Tighten to 21-29 N·m (15-21 Lb-Ft)

Installation

1. Follow removal procedure in reverse order. Refer to the appropriate illustration for accelerator cable to instrument panel holding screw tightening specifications.

Licensed Product Ford Motor Company

REMOVAL AND INSTALLATION (Continued)

2. Fully seat accelerator cable grommets into slotted hole in accelerator pedal and shaft and dash reinforcement hole.

4. Tighten lower screw to 21-29 N·m (15-21 lb-ft).
5. Snap accelerator cable into slotted hole in accelerator pedal and shaft.

Accelerator Pedal and Shaft

Removal

1. Remove accelerator cable (9A758) from accelerator pedal and shaft (9725).
2. Remove the screws holding the accelerator pedal and shaft to the instrument panel (04320).
3. Remove the accelerator pedal and shaft from the instrument panel.

Installation

1. NOTE: For F-Super Duty Motorhome Chassis vehicles, position accelerator pedal and shaft to instrument panel and install retaining screws.

   For F-250 Heavy Duty and F-350, position accelerator pedal and shaft to instrument panel and install lower screw hand-tight.
2. Install upper screw and tighten to 21-29 N·m (15-21 lb-ft).
3. Install middle screw and tighten to 21-29 N·m (15-21 lb-ft).

Accelerator Cable Bracket

Removal

1. Remove the accelerator control splash shield (9E766), if so equipped.
2. Remove the accelerator cable (9A758) from the accelerator cable bracket (9723).
3. Remove the kickdown control shaft rod (7A187) from the accelerator cable bracket, if so equipped.
4. Remove the accelerator shaft bracket holding screws and remove the accelerator cable bracket from the intake manifold cylinder head.

Installation

1. Follow removal procedure in reverse order. Refer to the appropriate illustration for screw tightening specifications.

Official Licensed Product
Ford Motor Company

REMOVAL AND INSTALLATION (Continued)

Accelerator Cable, F-250 Heavy Duty and F-350 with 5.8L MFI Engine

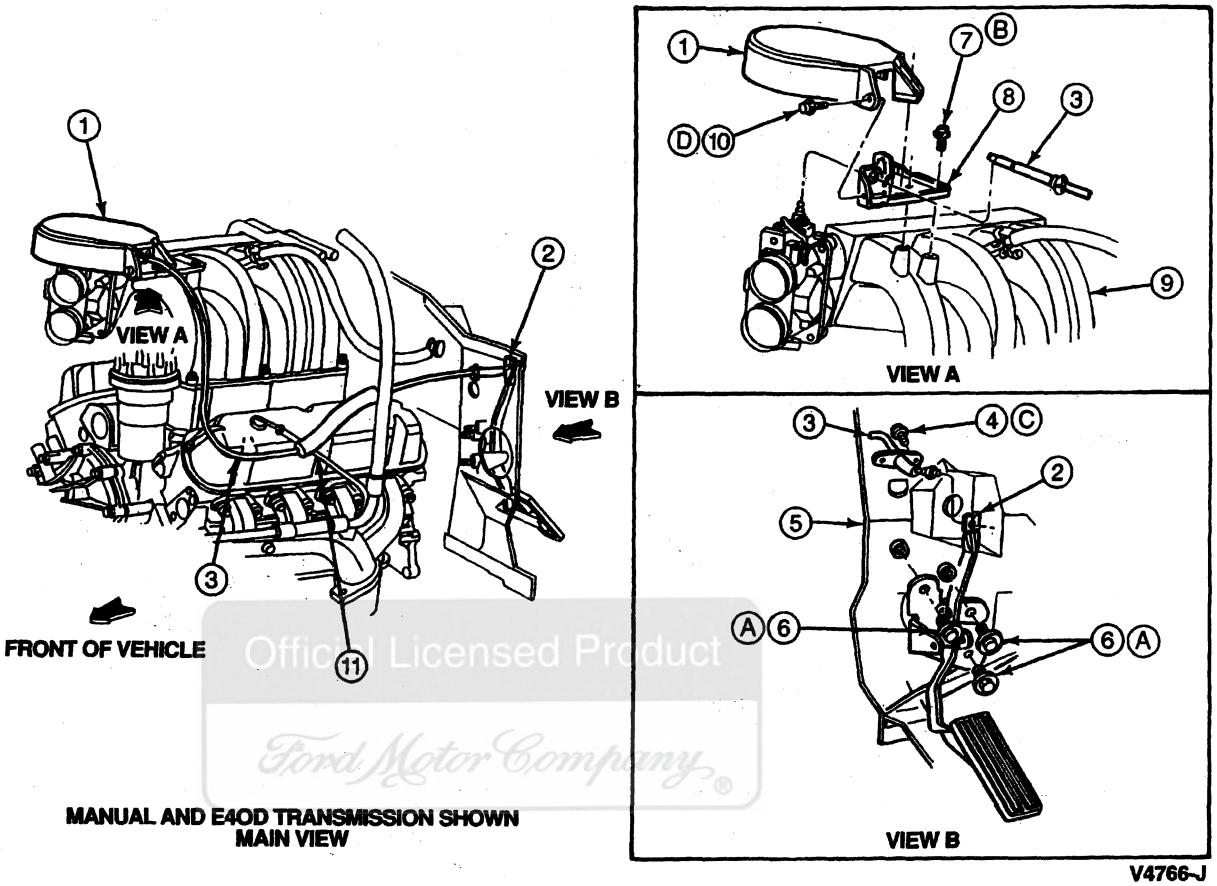

MANUAL AND E4OD TRANSMISSION SHOWN
MAIN VIEW

Official Licensed Product
Ford Motor Company

Item	Part Number	Description
1	9E766	Accelerator Control Splash Shield
2	9725	Accelerator Pedal and Shaft
3	9A758	Accelerator Cable
4	N610959-S2	Screw
5	04320	Instrument Panel
6	N801921-S2	Screw and Washer
7	56719-S2	Bolt
8	9723	Accelerator Cable Bracket

(Continued)

Item	Part Number	Description
9	9424	Intake Manifold (Upper)
10	N802826-S55M	Screw
11	6750	Oil Level Indicator Tube
A	—	Tighten to 21-29 N·m (15-21 Lb-Ft)
B	—	Tighten to 21-27 N·m (15-19 Lb-Ft)
C	—	Tighten to 2-3 N·m (18-27 Lb-In)
D	—	Tighten to 5-9 N·m (44-80 Lb-In)

REMOVAL AND INSTALLATION (Continued)

Accelerator Cable and Kickdown Control Cable, F-250 Heavy Duty and F-350 with 5.8L MFI Engine

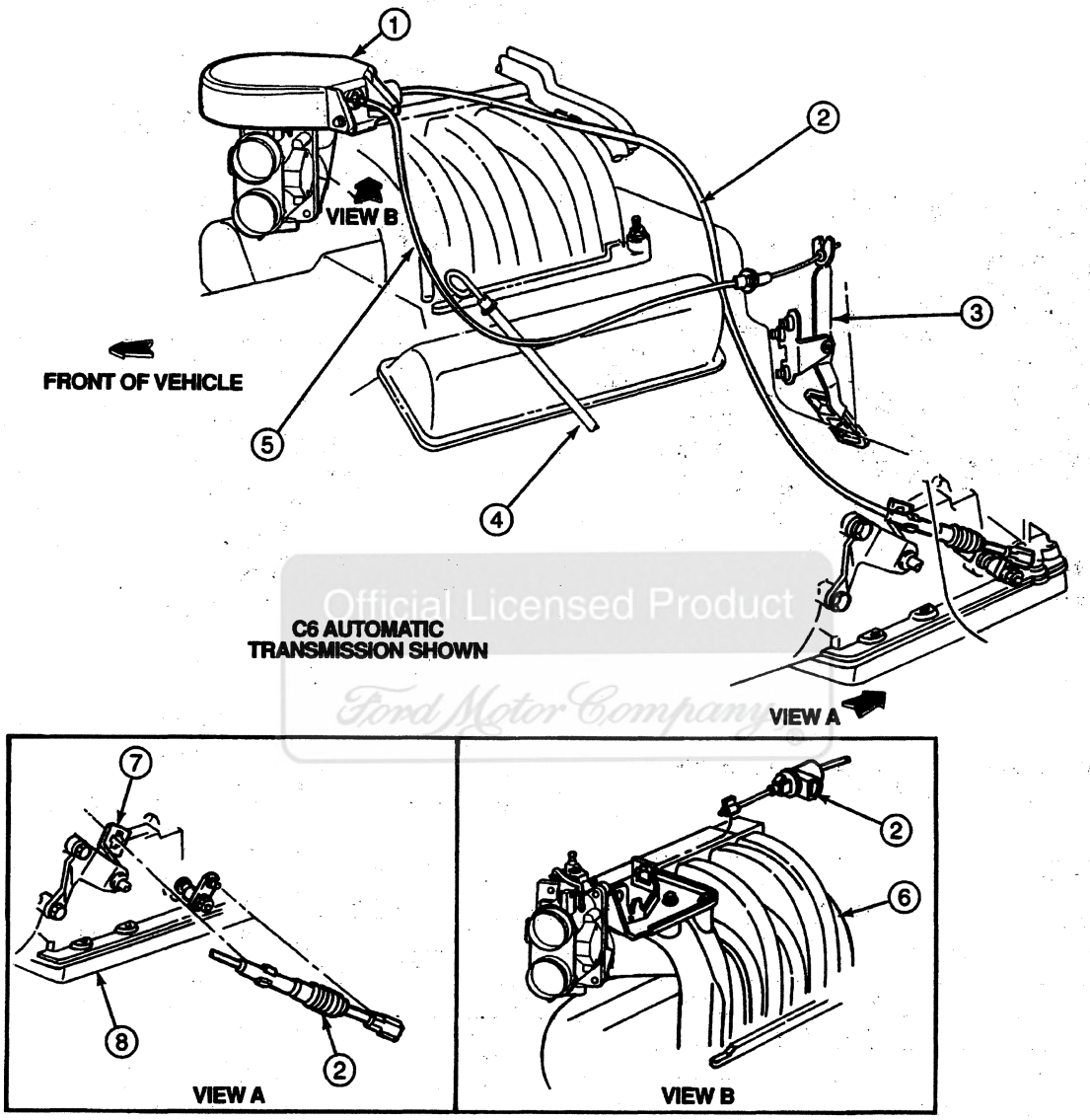

Official Licensed Product
Ford Motor Company

A16196-E

Item	Part Number	Description
1	9E766	Accelerator Control Splash Shield
2	7A185	Kickdown Control Cable
3	9725	Accelerator Pedal and Shaft
4	6754	Oil Level Indicator Tube

(Continued)

Item	Part Number	Description
5	9A758	Accelerator Cable
6	9424	Intake Manifold (Upper)
7	7C431	Gearshift Inner Bracket
8	7003	Transmission (Automatic)

REMOVAL AND INSTALLATION (Continued)

Accelerator Cable and Kickdown Control Shaft Rod, F-250 Heavy Duty, F-350 and F-Super Duty with 7.5L MFI Engine

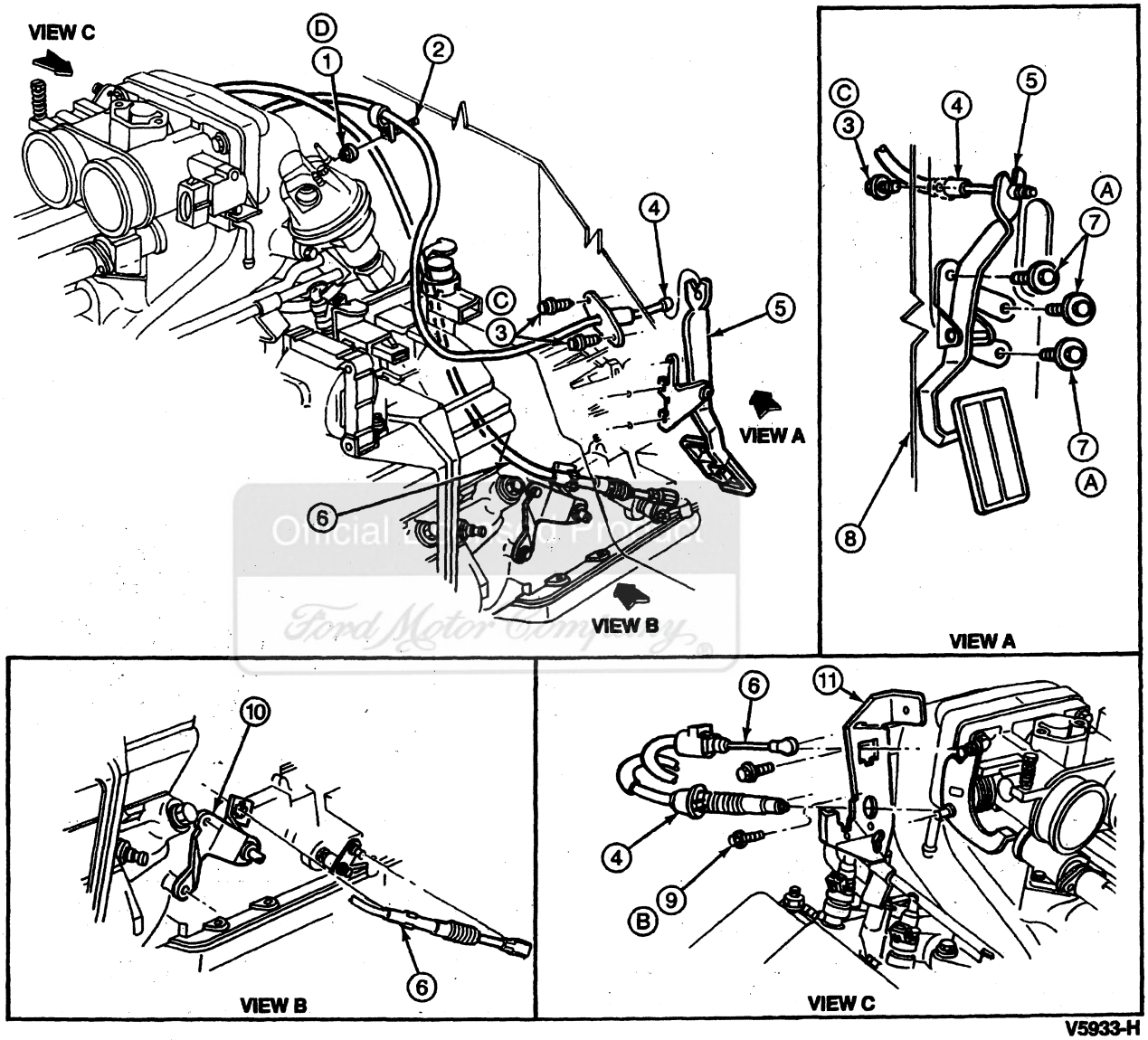

Item	Part Number	Description
1	N621906-S2	Nut and Washer
2	N802989-S	Stud, Weld
3	N610959-S2	Screw
4	9A758	Accelerator Cable
5	9725	Accelerator Pedal and Shaft
6	7A187	Kickdown Control Shaft Rod
7	N801921-S2	Screw and Washer
8	04320	Instrument Panel
9	57632-S2	Screw and Washer

(Continued)

Item	Part Number	Description
10	7C431	Gearshift Inner Bracket
11	9723	Accelerator Cable Bracket
A	—	Tighten to 21-29 N·m (15-21 Lb-Ft)
B	—	Tighten to 21-27 N·m (15-19 Lb-Ft)
C	—	Tighten to 2-3 N·m (18-27 Lb-In)
D	—	Tighten to 4-5 N·m (35-44 Lb-In)

REMOVAL AND INSTALLATION (Continued)

Accelerator Cable, F-Super Duty Motorhome with 7.5L MFI Engine

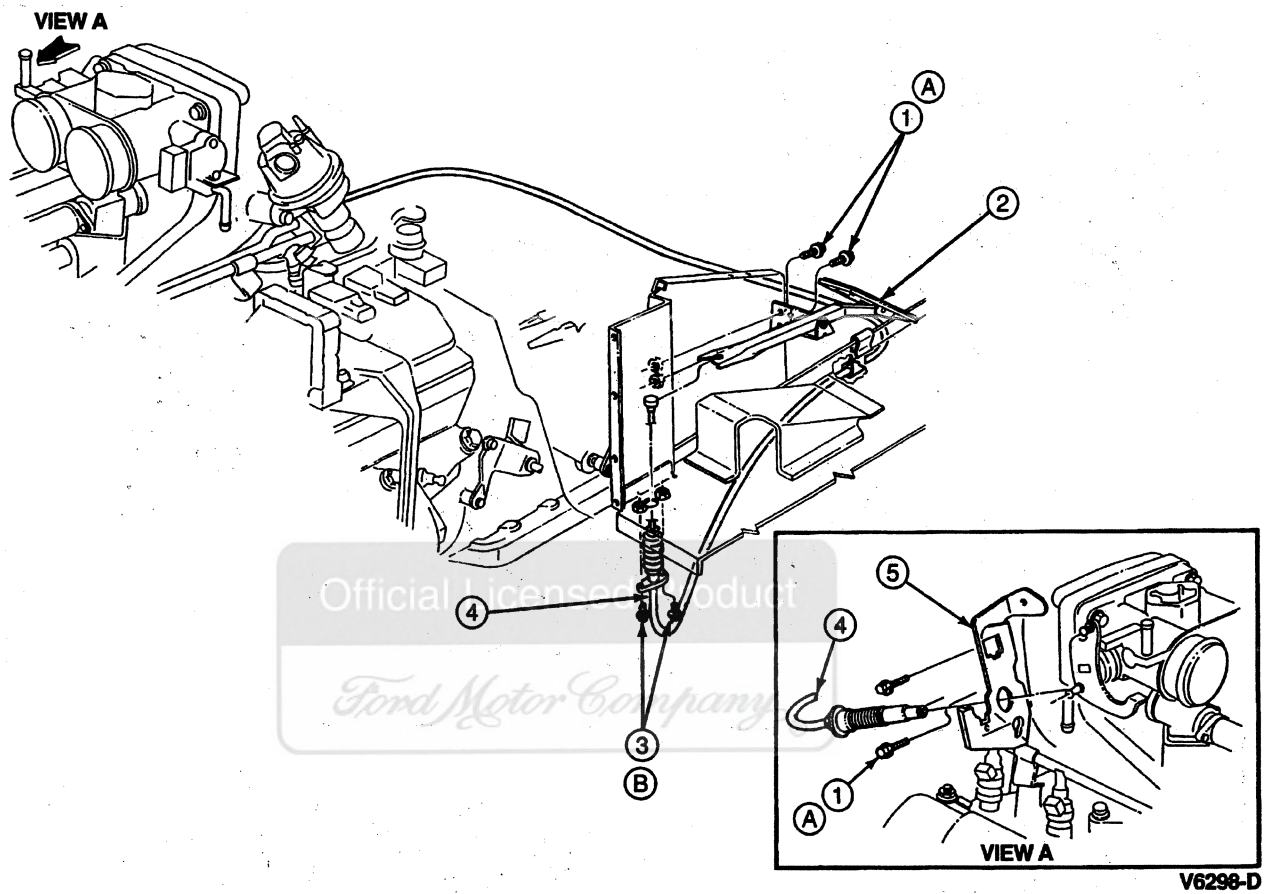

Official Licensed Product
Ford Motor Company

Item	Part Number	Description
1	N605786-S2	Bolt
2	9725	Accelerator Pedal and Shaft
3	N605890-S2	Screw
4	9A758	Accelerator Cable

(Continued)

Item	Part Number	Description
5	9723	Accelerator Cable Bracket
A	—	Tighten to 21-27 N·m (15-19 Lb-Ft)
B	—	Tighten to 3-5 N·m (27-44 Lb-In)

ADJUSTMENTS

Accelerator Cable

Wide-Open Throttle Position

When diagnosing wide-open throttle (WOT) position, depress the accelerator pedal and shaft (9725) to the floor. If wide-open throttle is difficult to achieve, requiring excessive effort, make sure aftermarket floormats have not been installed or mispositioned behind or under the accelerator pedal pad or shaft, which could result in the above listed symptoms by restricting full pedal movement. Refer to Accelerator Cable in the Removal and Installation portion of this section.

SPECIFICATIONS

TORQUE SPECIFICATIONS

Description	N·m	Lb-Ft	Lb-In
Accelerator Cable to Instrument Panel Screw, with 4.9L SFI Engine	2-3	—	18-27
Accelerator Cable to Instrument Panel Screw, with 5.0L MFI, 5.8L MFI, 7.5L MFI Engine and 7.3L Diesel Engine	2-3	—	18-27

(Continued)

TORQUE SPECIFICATIONS (Cont'd)

Description	N·m	Lb-Ft	Lb-In
Accelerator Cable to Instrument Panel Screw, Super Duty Motorhome Chassis with 7.5L Engine	3-5	—	27-44
Accelerator Cable to Instrument Panel Weld Stud, with 7.5L Engine	4-5	—	35-44
Accelerator Cable Bracket Screw	17-23	13-17	—
Accelerator Pedal Bracket Mounting Screw	21-29	15-21	—
Accelerator Pedal and Sensor Assembly Nuts	21-29	15-21	—

Official Licensed Product
Ford Motor Company

SECTION 10-03 Speed Control System, Electronic

SUBJECT	PAGE
VEHICLE APPLICATION	10-03-1
DESCRIPTION AND OPERATION	
Speed Control System	10-03-1
DIAGNOSIS AND TESTING	
Electrical Schematics	10-03-4
Inspection and Verification	10-03-4
Pinpoint Tests	10-03-6
Symptom Chart	10-03-4
REMOVAL AND INSTALLATION	
Brake On/Off (BOO) Switch	10-03-11
Clutch Pedal Position Switch	10-03-12
REMOVAL AND INSTALLATION (Cont'd.)	
Deactivator Switch	10-03-12
Speed Control Actuator	10-03-10
Speed Control Servo	10-03-10
ADJUSTMENTS	
Actuator Cable	10-03-12
Clutch Pedal Position Switch	10-03-12
Speed Control Actuator, 7.3L Diesel	10-03-12
SPECIFICATIONS	10-03-12
SPECIAL SERVICE TOOLS/EQUIPMENT	10-03-12

VEHICLE APPLICATION

F-250 Heavy Duty, F-350 and F-Super Duty

DESCRIPTION AND OPERATION

Speed Control System

The speed control system is designed to maintain vehicle speed automatically at any driver-selected speed above approximately 48 km/h (30 mph) and below approximately 201 km/h (125 mph). The system is comprised of a speed control servo (9C735) and other parts including horn relay, driver control switches, a stoplight switch (13480) and a deactivator switch. The speed signal is generated by the programmable speedometer/odometer module (PSOM) on all vehicles but motorhome. On motorhome, the speed signal is generated by the speed sensor located in the parking brake assembly. The speed control servo is mounted in the engine compartment and is connected to the throttle linkage with a speed control actuator cable (9A825).

Diagnosis and testing of the speed control system used on the 7.3L diesel engine can be found in the Powertrain Control/Emissions Diagnosis Manual.[1]

1 Can be purchased as a separate item.

DESCRIPTION AND OPERATION (Continued)

Speed Control System Components

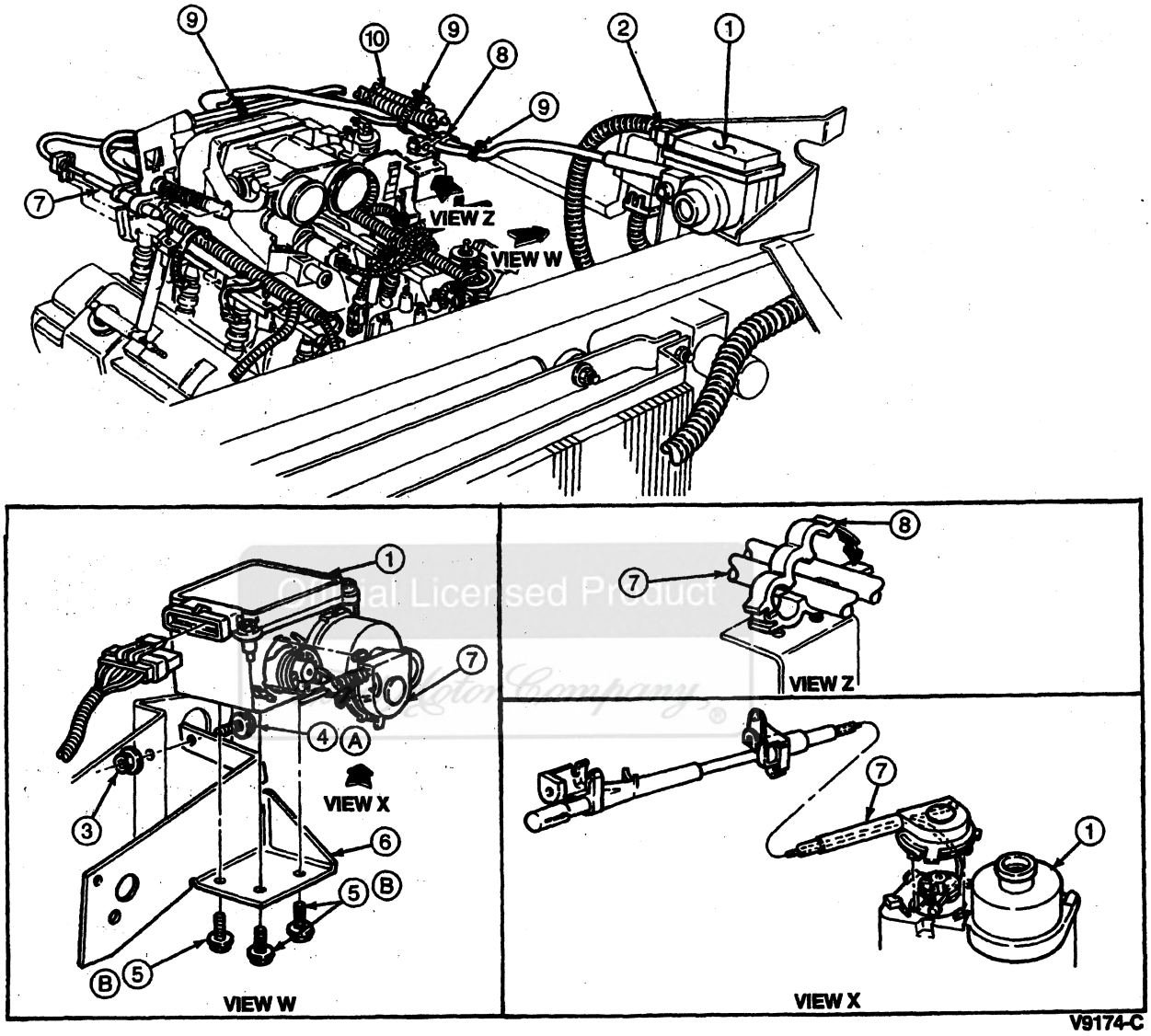

Item	Part Number	Description
1	9C735	Speed Control Servo
2	12A581	Engine Control Sensor Wiring
3	N620421-S2	Nut
4	N605786-S2	Bolt
5	N806515-S2	Screw
6	9C736	Bracket
7	9A825	Speed Control Actuator Cable

(Continued)

Item	Part Number	Description
8	N804323-S	Clip
9	95875-S	Strap
10	9D930	Fuel Charging Wiring
A	—	Tighten to 21-32 N·m (16-23 Lb-Ft)
B	—	Tighten to 8-10 N·m (71-89 Lb-In)

DESCRIPTION AND OPERATION (Continued)

Deactivator Switch

The deactivator switch is provided as an additional safety feature in the system. Normally, when the brake pedal (2455) is pressed, an electrical signal from the brake lamp circuit to the speed control amplifier (9D843) will turn off the system. Under increased brake pedal efforts (22-45 N·m [17-33 lb-ft]), the deactivator switch will open and remove power to the speed control actuator clutch, releasing the throttle independent of the speed control amplifier. The deactivator switch is located on the master cylinder on all vehicles except motorhome.

On Motorhome chassis, deactivator switch is located on underside of brake master cylinder.

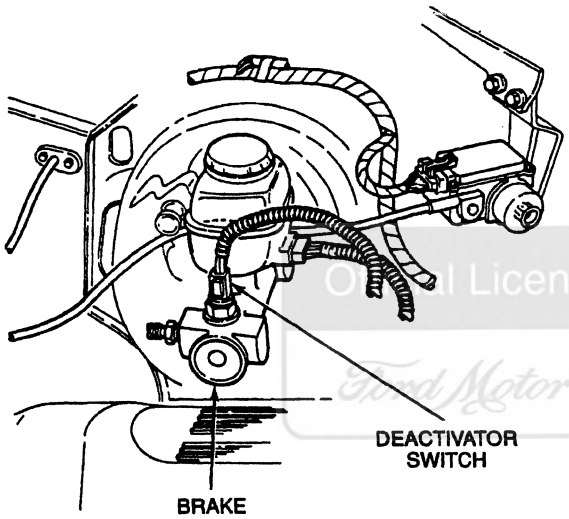

L10327-A

Programmable Speedometer/Odometer Module (PSOM)

All vehicles except Motorhome are equipped with the programmable speedometer/odometer module (PSOM) and use the speed signal generated by the PSOM as the input signal to the speed control servo. On Motorhome, the speed signal is generated by a sensor located in the parking brake assembly.

System Activation

To operate the speed control system, the engine (6007) must be running and the vehicle speed must be greater than 48 km/h (30 mph). Under these conditions, the system is activated by pressing the ON switch in the steering wheel (3600). Then, the operator must press and release the SET/ACCEL switch. This will result in the current speed being maintained until a new speed is set, the brake pedal is pressed, the clutch pedal (7519) is pressed on manual transmission vehicles, or the OFF switch is pressed. Only one switch button should be pressed at a time because the speed control system will accept only one command at a time.

Increasing Set Speed

Accel

A continuous depression of the SET/ACCEL switch will cause a smooth increase in vehicle speed. Upon release of the SET/ACCEL switch, the new vehicle speed will be maintained.

The vehicle speed can be manually increased at any time by pressing the accelerator pedal and shaft (9725) until the higher speed is reached and stabilized, then pressing and releasing the SET/ACCEL switch.

Tap-Up

Current vehicle set speed can be increased 1.6 km/h (1 mph) by a momentary tap of the SET/ACCEL switch. Multiple taps of the SET/ACCEL switch will cause vehicle speed to increase in increments of 1.6 km/h (1 mph). For example, if currently set at 80 km (50 mph) then five taps will increase vehicle speed and set it at 88 km (55 mph).

Decreasing Set Speed

Coast

A continuous depression of the COAST switch will cause a smooth decrease in vehicle speed. Upon release of the COAST switch the new vehicle speed will be maintained.

The vehicle speed can be manually decreased at any time by momentarily pressing the brake pedal until the lower speed is reached and stabilized, then pressing and releasing the SET/ACCEL switch.

If vehicle speed is reduced below 48 km/h (30 mph) then the driver must manually increase the speed to over 48 km/h (30 mph) and reset the system.

Tap-Down

Current vehicle set speed can be decreased 1.6 km/h (1 mph) by a momentary tap of the COAST switch. Multiple taps of the COAST switch will cause vehicle speed to decrease in increments of 1.6 km/h (1 mph). For example, if currentiy set at 88 km (55 mph), then five taps will decrease vehicle speed and set it at 80 km (50 mph).

Resume

When the speed control system is disabled by pressing the brake pedal or clutch pedal if so equipped, the previous set speed can be re-established by momentarily pressing the RESUME switch. The RESUME feature will not function if the system has been turned off with the OFF switch or if the key is turned off. If the vehicle speed has dropped below 48 km/h (30 mph), then RESUME will not function until the vehicle speed becomes greater than 48 km/h (30 mph).

Contact Assembly (Clockspring)

The contact assembly provides electrical interface between the steering column tube (3514) and the control switches in the steering wheel.

Ford Motor Company Official Licensed Publication

DESCRIPTION AND OPERATION (Continued)

Ground Brush

The speed control ground brush assembly provides an electrical ground path between the steering wheel and steering column tube.

DIAGNOSIS AND TESTING

Electrical Schematics

Refer to Electrical and Vacuum Troubleshooting Manual, Cell 31, Speed Control for schematic and connector information.

Inspection and Verification

Visual inspection is an important part of diagnosis. The inspection should be done to locate obvious reasons for customer concern.

When performing visual inspection, check all items for abnormal conditions. Look for such items as bare, broken or disconnected wires. For the speed control to function properly, speed control actuator cable (9A825) (throttle actuator) and throttle linkage should operate freely and smoothly.

Any concerns found by the visual inspection should be corrected before further tests of the speed control system are made. The following items should be inspected.

- If the amber RABS indicator in the instrument cluster stays lit when the key is in RUN, refer to Section 06-09 in the Body Chassis Manual before continuing with the speed control diagnostics.
- Does the horn (13832) work? If not, check the horn circuit fuse, horn relay and horn circuit wiring.
- Do the stoplamps light when the brake pedal (2455) is depressed? If not, check the stoplamp circuit fuse, rear lamps (13404), wiring and stoplight switch (13480).

Electronic Servo Assembly

Check for unseated connectors at the speed control servo (9C735).

- Look for loose or unseated connector pins.
- Check for broken wires at the connectors.

Actuator Cable

- Misadjusted speed control actuator cable. If misadjustment is suspected, readjust according to procedure above.
- Broken speed control actuator cable.

Speed Control Diagnostic Sequence

NOTE: If amber RABS light remains on, refer to Section 06-09 in the Body, Chassis Manual.

Symptom Chart

Refer to the Electrical and Vacuum Troubleshooting Manual for the connector numbers in the pinpoint tests.

DIAGNOSIS AND TESTING (Continued)

NOTE: For 7.3L DI diesel speed control diagnosis, refer to the Powertrain Control / Emissions Diagnosis Manual.[2]

NOTE: Use Rotunda 73 Digital Multimeter 105-R0051 or equivalent to perform electrical pinpoint tests.

SPEED CONTROL DIAGNOSTICS, GASOLINE ENGINES

Condition	Possible Source	Action
• Speed Control Inoperative	• Blown fuse. • Circuitry. • Stoplight switch / bulbs. • Speed control actuator switch assembly. • Deactivator switch. • Speed control servo.	• GO to Pinpoint Test A.
• Set Speed Fluctuates	• Programmable Speedometer / Odometer. • Speed control servo. • Speed control actuator switch assembly. • Circuitry. • Loose fit or binding between speed control actuator cable and throttle body. • Engine.	• GO to Pinpoint Test B. • REFER to 1996 Powertrain Control / Emissions Diagnosis Manual.[2] SERVICE engine as required.
• Speed Control Does Not Disengage When Brakes Are Applied	• Stoplight switch. • Speed control servo. • Circuitry. • Deactivator switch. • Binding actuator cable.	• GO to Pinpoint Test C.
• Speed Control Does Not Disengage When Clutch Is Applied	• Circuitry. • Clutch Switch.	• GO to Pinpoint Test D.
• COAST Switch Inoperative	• Speed control actuator switch. • Speed control servo. • Circuitry.	• GO to Pinpoint Test E.
• SET / ACCEL Switch Inoperative	• Speed control actuator switches. • Speed control servo. • Circuitry.	• GO to Pinpoint Test F.
• RESUME Switch Inoperative	• Speed control actuator switch. • Speed control servo. • Circuitry.	• GO to Pinpoint Test G.
• OFF Switch Inoperative	• Speed control actuator switch. • Speed control servo. • Circuitry.	• GO to Pinpoint Test H.

Official Licensed Product
Ford Motor Company

2 Can be purchased as a separate item.

DIAGNOSIS AND TESTING (Continued)

Pinpoint Tests

NOTE: For 7.3L DI diesel speed control diagnosis, refer to the Powertrain Control / Emissions Diagnosis Manual.[3]

To avoid connector terminal damage, always use test probe adapters. Failure to comply may result in spread terminals and intermittent speed control operations.

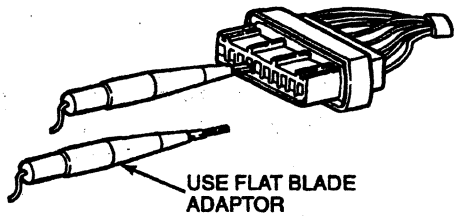

ROTUNDA TERMINAL ADAPTOR KIT #105-R025A

L10329-A

PINPOINT TEST A: SPEED CONTROL INOPERATIVE

Test Step		Result ▶	Action to Take
A1	VERIFY THERE IS POWER TO SPEED CONTROL SERVO		
	• Disconnect speed control servo connector C216 from the speed control servo. • Use Rotunda 73 Digital Multimeter 105-R0051 or equivalent to make the specified measurements at the speed control servo connector C216. • Use Rotunda Terminal Adapter Kit No. 105-R025A to avoid connector terminal damage. • Key to RUN. • Measure voltage between Pin 7, Circuit 298 (P/O) and Pin 10, Circuit 901 (R/LB). • **Is there battery voltage (12 V nom.)?**	Yes ▶ No ▶	GO to **A3**. GO to **A2**.
A2	CHECK MODULE GROUND CIRCUIT		
	• Key off. • Measure the resistance between Pin 10, Circuit 901 (R/LB) and ground point on the chassis. • **Is resistance less than 1 ohm?**	Yes ▶ No ▶	GND is OK. Power to module is open. Check Fuse 13 and Circuit 298 (P/O). REPAIR open in ground Circuit 901 (R/LB).
A3	CHECK FOR STUCK STOPLIGHT SWITCH		
	• With no brakes applied, measure the voltage between Pin 4, Circuit 306 (T/LB) and Pin 10, Circuit 901 (R/LB). • **Is the battery voltage (12 V nom.)?**	Yes ▶ No ▶	Stoplight switch is stuck on. REPLACE stoplight switch. Stoplight switch is not stuck on. GO to **A4**.
A4	CHECK BRAKE / CLUTCH CIRCUIT GROUND		
	• Key off. • Measure the resistance between Pin 4, Circuit 306 (T/LB) and Pin 10, Circuit 901(R/LB). • **Is resistance less than 20 ohms?**	Yes ▶ No ▶	Brake / clutch input circuit OK. GO to **A5**. Brake light bulbs blown or brake / clutch circuit open. SERVICE circuit including clutch pedal position switch.
A5	CHECK DEACTIVATOR CIRCUIT (AT SPEED CONTROL SERVO CONNECTOR 216)		
	• Connect 12 volt circuit test light between Pin 9, Circuit 307 (BK/Y) and Pin 10, Circuit 901 (R/LB). • **Is the light illuminated?**	Yes ▶ No ▶	GO to **A9**. No power from deactivator. GO to **A6**.

3 Can be purchased as a separate item.

DIAGNOSIS AND TESTING (Continued)

PINPOINT TEST A: SPEED CONTROL INOPERATIVE (Continued)

Test Step		Result ▶	Action to Take
A6	CHECK DEACTIVATOR SWITCH (AT SWITCH)		
	• Remove deactivator switch connector C102 from deactivator switch. • Measure the resistance between the two pins of the deactivator switch with no brakes applied. • **Is resistance less than 1 ohm?**	Yes ▶ No ▶	Deactivator switch OK. GO to **A7**. Deactivator switch defective. REPLACE switch. REPEAT Step **A5**.
A7	VERIFY THERE IS POWER AT DEACTIVATOR SWITCH CONNECTOR C102		
	• Measure voltage between Pin 1, Circuit 10 (LG/R) of the deactivator switch harness connector C102 and chassis ground. • **Is there battery voltage (12 V nom.)?**	Yes ▶ No ▶	Power at connector OK. GO to **A8**. SERVICE for blown fuse or open in deactivator switch circuit.
A8	CHECK FOR OPEN CIRCUIT BETWEEN DEACTIVATOR SWITCH AND SERVO		
	• Measure resistance from Pin 2, Circuit 307 (BK/Y) of deactivator switch and Pin 9, Circuit 307 (BK/Y) of service assembly of speed control servo. • **Is resistance less than 1 ohm?**	Yes ▶ No ▶	CHECK for bent or corroded pins on deactivator switch and connector C102. SERVICE as required. REPEAT Step **A5**. If connections are serviceable, GO to **A9**. Open in wire harness. SERVICE as required.
A9	CHECK FOR STUCK COMMAND SWITCHES		
	• Key off. • With no steering wheel switches pressed, measure the resistance between Pin 5, Circuit 151 (LB/BK) and Pin 6, Circuit 848 (DG/O). • **Is resistance greater than 3 k ohms?**	Yes ▶ No ▶	No stuck switches. GO to **A10**. One of the command switches is stuck. REPLACE switch.
A10	CHECK ON SWITCH OPERATION		
	• Key off. • With steering wheel ON switch pressed, measure voltage between Pin 5, Circuit 151 (LB/BK) and Pin 10, Circuit 901 (R/LB). • **Is there battery voltage (12 V nom.)?**	Yes ▶ No ▶	ON switch OK. GO to **A12**. ON switch not functioning. GO to **A11**.
A11	CHECK FOR OPEN CIRCUIT IN "ON" SWITCH GROUND		
	• With horn pressed, measure voltage between Pin 6, Circuit 848 (DG/O) and chassis ground. • **Is there battery voltage (12 V nom.)?**	Yes ▶ No ▶	Open circuit between Pin 5 and command switches or inoperative switches. SERVICE as required. Open circuit or fuse in horn relay feed or open circuit in switch ground. SERVICE as required. REPEAT Step **A10**.
A12	CHECK SET/ACCEL SWITCH OPERATION		
	• Key off. • With the SET/ACCEL switch pressed, measure the resistance between Pin 5, Circuit 151 (LB/BK) and Pin 6, Circuit 848 (DG/O). • **Is resistance approximately 680 (640-720) ohms?**	Yes ▶ No ▶	Switch is OK. GO to **A13**. Switch not functioning. REPLACE switch.
A13	CHECK FOR SHORT IN COMMAND SWITCH RETURN CIRCUIT		
	• Measure resistance between Pin 6, Circuit 848 (DG/O) and Pin 10, Circuit 901 (R/LB). • **Is resistance less than 1 ohm?**	Yes ▶ No ▶	SERVICE short in Circuit 848. Return circuit OK. GO to **A14**.
A14	VERIFY SPEED SIGNAL		
	• Operate vehicle with rear wheels raised. Set speed at 30 mph. Use Rotunda Digital Volt-Ohmmeter 014-00407 or equivalent to measure the voltage between Pin 3, Circuit 679 (GY/BK) and Pin 10, Circuit 901 (R/LB). • **Is voltage reading 4-5 volts?**	Yes ▶ No ▶	Speed signal OK. GO to **A15**. SERVICE programmable speedometer/odometer. GO to Section 13-01 in the Body Chassis Manual.

Official Licensed Product Motor Company

DIAGNOSIS AND TESTING (Continued)

PINPOINT TEST A: SPEED CONTROL INOPERATIVE (Continued)

Test Step		Result ▶	Action to Take
A15	CHECK FOR BROKEN OR BOUND ACTUATOR CABLE		
	• Remove speed control actuator cable from speed control servo. Check for broken speed control actuator by pulling on speed control actuator and noting throttle movement. • **Is speed control actuator OK?**	Yes ▶ No ▶	REPLACE speed control servo. SERVICE speed control actuator cable.

PINPOINT TEST B: SET SPEED FLUCTUATES

Test Step		Result ▶	Action to Take
B1	CHECK THAT CONDITION OCCURS ONLY WHILE USING SPEED CONTROL		
	• Drive vehicle at the speed in which the condition occurs. • **Does the speedometer needle waiver by more than ± 2 mph?**	Yes ▶ No ▶	Bad programmable speedometer/odometer module, RABS speed sensor, or rear axle ring gear. SERVICE as necessary. GO to **B2**.
B2	CHECK PROGRAMMABLE SPEEDOMETER/ODOMETER MODULE OUTPUT SIGNAL		
	• Check PSOM output signal. Refer to Section 13-01 in the Body, Chassis Manual. • **Did PSOM pass output signal test?**	Yes ▶ No ▶	GO to **B3**. SERVICE as required.
B3	CHECK FOR BINDING IN SPEED CONTROL ACTUATOR CABLE AND THROTTLE BODY LINKAGE		
	• Check for binding or sticking of speed control cable or throttle linkage and throttle plate. • Make sure throttle cable bracket and speed control servo bracket are not loose. • **Are components OK?**	Yes ▶ No ▶	REPLACE speed control servo and VERIFY condition is corrected. SERVICE as required.

PINPOINT TEST C: SPEED CONTROL DOES NOT DISENGAGE WHEN BRAKES ARE APPLIED

Test Step		Result ▶	Action to Take
C1	CHECK FOR BINDS IN SPEED CONTROL ACTUATOR/THROTTLE BODY ATTACHMENT		
	• Disconnect speed control servo connector C216 from speed control servo. • Check for binding of speed control actuator cable. • **Is speed control actuator cable OK?**	Yes ▶ No ▶	GO to **C2**. SERVICE as required.
C2	CHECK BRAKE SWITCH OPERATION		
	• With brakes applied, measure the voltage between Pin 4, Circuit 306 (T/LB) and Pin 10, Circuit 901 (R/LB). • **Is there battery voltage (12 V nom.)?**	Yes ▶ No ▶	REPLACE speed control servo. Switch not functioning. REPLACE or SERVICE.

PINPOINT TEST D: SPEED CONTROL DOES NOT DISENGAGE WHEN CLUTCH IS APPLIED

Test Step		Result ▶	Action to Take
D1	CHECK CLUTCH CIRCUIT		
	• Key off. • Measure the resistance between Pin 4, Circuit 306 (T/LB) and Pin 10, Circuit 901 (R/LB). • **Is resistance less than 20 ohms?**	Yes ▶ No ▶	Clutch input circuit OK. GO to **D2**. Clutch circuit open. SERVICE circuit including clutch pedal position switch.
D2	CHECK CLUTCH OPERATION		
	• With clutch pedal applied, measure the resistance between Pin 4, Circuit 306 (T/LB) and Pin 10, Circuit 901 (R/LB). • **Is resistance less than 20 ohms?**	Yes ▶ No ▶	REPLACE speed control servo. Switch not functioning. REPLACE or SERVICE.

DIAGNOSIS AND TESTING (Continued)

PINPOINT TEST E: COAST SWITCH INOPERATIVE

Test Step		Result ▶	Action to Take
E1	CHECK COAST SWITCH OPERATION		
	• Disconnect speed control servo connector C216 from speed control servo. • Key off. • With COAST switch pressed, measure the resistance between Pin 5, Circuit 151 (LB/BK) and Pin 6, Circuit 848 (DG/O) while rotating steering wheel through full range. • **Is resistance approximately 120 (114-126) ohms?**	Yes ▶ No ▶	Coast switch OK. GO to **E2**. REPLACE switch.
E2	CHECK COMMAND SWITCH RETURN CIRCUIT		
	• Measure the resistance between Pin 6, Circuit 848 (DG/O) and Pin 10, Circuit 901 (R/LB). • **Is resistance less than 1 ohm?**	Yes ▶ No ▶	Switch return is incorrectly grounded. SERVICE as required. REPLACE speed control servo.

PINPOINT TEST F: SET/ACCL SWITCH INOPERATIVE

Test Step		Result ▶	Action to Take
F1	CHECK SET/ACCL SWITCH OPERATION		
	• Disconnect speed control servo connector C216 from speed control servo. • Key off. • With SET/ACCL switch pressed, measure the resistance between Pin 5, Circuit 151 (LB/BK) and Pin 6, Circuit 848 (DG/O) while rotating steering wheel through full range. • **Is resistance approximately 680 (646-714) ohms?**	Yes ▶ No ▶	SET/ACCL OK. GO to **F2**. REPLACE switch.
F2	CHECK COMMAND SWITCH RETURN CIRCUIT		
	• Measure the resistance between Pin 6, Circuit 848 (DG/O) and Pin 10, Circuit 901 (R/LB). • **Is resistance less than 1 ohm?**	Yes ▶ No ▶	Speed control actuator switch return is incorrectly grounded. SERVICE as required. REPLACE speed control servo assembly.

PINPOINT TEST G: RESUME SWITCH INOPERATIVE

Test Step		Result ▶	Action to Take
G1	CHECK RESUME SWITCH OPERATION		
	• Disconnect speed control servo connector C216 from speed control servo. • Key off. • With RESUME switch pressed, measure the resistance between Pin 5, Circuit 151 (LB/BK) and Pin 6, Circuit 848 (DG/O) while rotating steering wheel through full range. • **Is resistance approximately 2200 (2090-2310) ohms?**	Yes ▶ No ▶	RESUME OK. GO to **G2**. REPLACE switch.
G2	CHECK COMMAND SWITCH RETURN CIRCUIT		
	• Measure the resistance between Pin 6, Circuit 848 (DG/O) and Pin 10, Circuit 901 (R/LB). • **Is resistance less than 1 ohm?**	Yes ▶ No ▶	Switch return is incorrectly grounded. SERVICE as required. REPLACE speed control servo.

DIAGNOSIS AND TESTING (Continued)

PINPOINT TEST H: OFF SWITCH INOPERATIVE

Test Step		Result ▶	Action to Take
H1	CHECK OFF SWITCH OPERATION		
	• Disconnect speed control servo connector C216 from speed control servo. • Key off. • With OFF switch pressed, measure the resistance between Pin 5, Circuit 151 (LB/BK) and Pin 6, Circuit 848 (DG/O) while rotating steering wheel through full range. • **Is resistance less than 4 ohms?**	Yes ▶ No ▶	REPLACE speed control servo. OFF switch not functioning. REPLACE switch.

REMOVAL AND INSTALLATION

Speed Control Servo

Removal

1. Remove speed control servo bracket attaching bolts and nuts.
2. Disconnect speed control 10-way connector.
3. Depress accelerator pedal and shaft (9725), then push locking arm on speed control actuator cap and rotate cap counterclockwise.
4. Remove speed control actuator cable slug from speed control servo pulley. Gently push actuator cable slug past retaining spring using a small screwdriver.
5. Remove bracket from the speed control servo (9C735); keep bracket and three screws for reuse.

Speed Control Servo Rotor

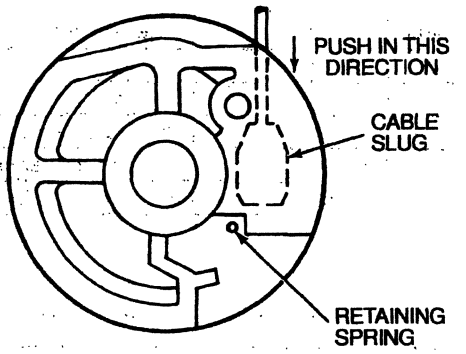

PULLEY WITH METAL RETAINING SPRING V9138-B

Installation

1. Attach bracket to speed control servo with three screws. Tighten to 8-10 N·m (71-81 lb-in).
2. Attach speed control 10-way connector to speed control servo.
3. Make sure the rubber seal is fully seated on actuator cable cap.
4. Depress accelerator pedal and shaft if accelerator cable (9A758) is attached to throttle and lock cable ball in slot located in servo pulley.
5. Release accelerator cable or pull accelerator cable at throttle end.
6. Insert cap locking tabs into speed control servo slots as shown.
7. Rotate cap clockwise until locking arm engages locking tab on servo.
8. Position speed control servo and install attaching bolts and nuts. Tighten nuts to 21-32 N·m (16-23 lb-ft).
9. On all except 7.3L diesel engine-equipped vehicles, adjust speed control actuator cable (9A825).

Speed Control Actuator

Removal

1. Remove speed control actuator cable (9A825) from speed control servo (9C735).
2. Remove speed control actuator cable from throttle bracket.
3. Remove speed control actuator cable from accelerator cable (9A758).

Installation

1. Snap speed control actuator cable onto accelerator cable.
2. Snap speed control actuator cable to throttle cable bracket.
3. Attach speed control actuator cable to speed control servo.
4. Adjust speed control actuator cable.

Ford Motor Company Licensed Product

REMOVAL AND INSTALLATION (Continued)

Speed Control and Cable Installation, 7.5L MFI Engine, F-Series

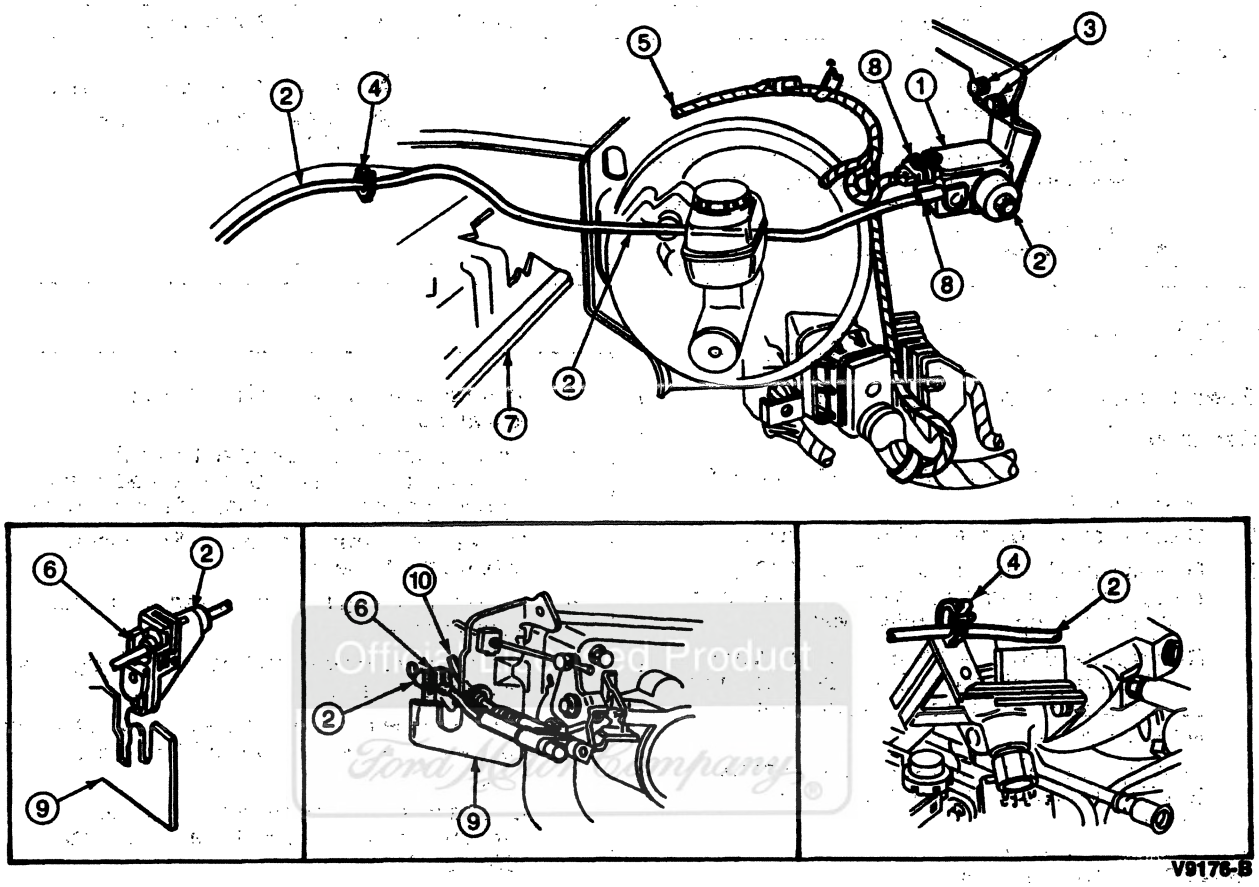

Item	Part Number	Description
1	9C735	Speed Control Servo
2	9A825	Speed Control Actuator Cable
3	N605786-S6	Bolt
4	14A163	Clamp
5	12A581	Engine Control Sensor Wiring

(Continued)

Item	Part Number	Description
6	N804323-S	Clip
7	6007	Engine
8	—	Connector (Part of 12A581)
9	9723	Accelerator Cable Bracket
10	9A758	Accelerator Cable

Brake On/Off (BOO) Switch

Removal

1. NOTE: Locking tab must be lifted before connector can be removed.

   Disconnect main wiring connector from stoplight switch (13480).

2. NOTE: Since the switch side plate nearest the brake pedal (2455) is slotted, it is not necessary to remove the power brake booster (2005) and black bushing from the brake pedal pin.

   Remove the hairpin retainer. Slide stoplight switch, power brake booster, white nylon washer and bushing away from brake pedal.

REMOVAL AND INSTALLATION (Continued)

3. Remove washer and then the stoplight switch by sliding stoplight switch up or down.

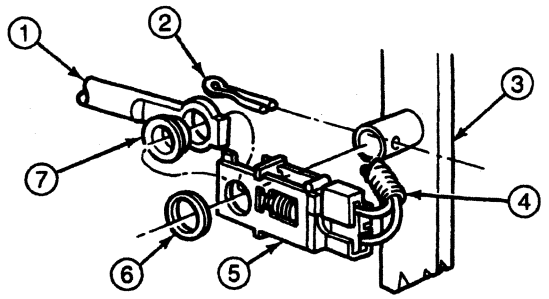

K17728-D

Item	Part Number	Description
1	2005	Power Brake Booster
2	380699-S100	Self-Locking Pin
3	2455	Brake Pedal
4	—	Wiring (Part of 14401)
5	13480	Stoplight Switch
6	2B129	Spacer
7	2A309	Bushing

Clutch Pedal Position Switch

Refer to Section 07-14.

Deactivator Switch

Removal

1. Disconnect deactivator switch connector. Deactivator switch is located on the brake master cylinder (2140).
2. Unscrew switch and remove.

Installation

1. Follow removal procedure in reverse order.
2. Tighten switch to 15-20 N·m (11-15 lb-ft).
3. Bleed brake lines. Refer to Section 06-06 in the Body, Chassis Manual.

ADJUSTMENTS

Actuator Cable

1. Remove cable retaining clip from actuator cable at accelerator cable bracket (9723).
2. Set throttle plate to closed position.
3. Pull on the actuator cable to take up any slack. Back off at least one notch so that there is 1 mm (0.040 inch) of slack in the cable. The cable must not be pulled tight for proper operation.
4. While holding the cable, insert the retaining clip and snap securely.

Speed Control Actuator, 7.3L Diesel

Because the speed control is completely controlled by the powertrain control module (PCM)(12A650), there are no adjustments.

Clutch Pedal Position Switch

Refer to Section 07-14.

SPECIFICATIONS

TORQUE SPECIFICATIONS

Description	N·m	Lb-Ft	Lb-In
Servo Bracket Screws	8-10	—	71-89
Servo Bracket Nut	21-32	16-23	—
Deactivator Switch	15-20	11-15	—

SPECIAL SERVICE TOOLS/EQUIPMENT

ROTUNDA EQUIPMENT

Model	Description
014-00407	Digital Volt-Ohmmeter
105-R0051	73 Digital Multimeter
105-R025A	Terminal Adapter Kit

Unlicensed Product Ford Motor Company

METRICS

BOLT STRENGTH IDENTIFICATION

ENGLISH SYSTEM

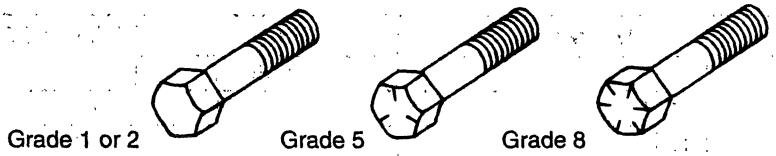

Grade 1 or 2 Grade 5 Grade 8

English bolts: Identification marks on the bolt head represent Rockwell hardness. Generally, the bolt's grade is equal to the number of marks plus two. The higher the grade, the stronger the bolt.

METRIC SYSTEM

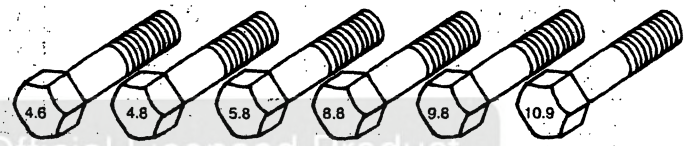

Official Licensed Product
Ford Motor Company

Metric bolts: Identification class numbers on bolt heads represent tensile strength. Higher numbers indicate stronger bolts. Common metric fastener bolt strength properties are 9.8 and 10.9.

HEX NUT STRENGTH IDENTIFICATION

ENGLISH SYSTEM

Grade 5 Grade 8

Identification dots represent Rockwell hardness. The nut's grade is equal to the number of dots plus two. The higher the grade, the stronger the nut.

METRIC SYSTEM

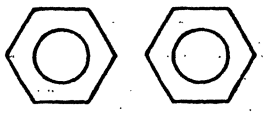

Identification class numbers on nuts represent tensile strength. Higher numbers indicate stronger nuts. Nuts may also have blue finish or paint daub on hex flat.

OTHER TYPES OF PARTS

Metric identification schemes vary by type of part, most often a variation of that used for bolts and nuts. Note that many types of English and Metric fasteners carry no special identification if they are otherwise unique.

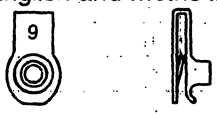

–Stamped U-Nuts

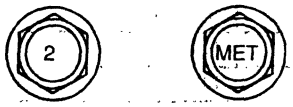

–Tapping, thread forming and certain other case hardened screws.

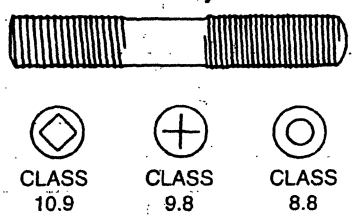

–Studs, Large studs may carry the property class number. Smaller studs use a geometric code on the end.

METRICS

ENGLISH/METRIC CONVERSION

DESCRIPTION	MULTIPLY	BY	FOR METRIC EQUIVALENT
Acceleration	ft/s^2	0.3048	m/s^2
	in/s^2	0.0254	m/s^2
Torque	lb-in	0.11298	N·m
	lb-ft	1.3558	N·m
Power	horsepower	0.746	kW
Pressure or Stress	inches of water	0.2491	kPa
	psi	6.895	kPa
	psi	0.069	bar
Energy or Work	BTU	1055.0	Joules(J)
	lb-ft	1.3558	Joules(J)
	kiloWatt-hour	3,600,000 or 3.6×10^6	Joules(J)
Light	foot candle	10.764	lumens/square meter (lm/m^2)
Fuel Performance	miles/gal	0.4251	kilometers/liter (km/L)
	gal/mile	2.3527	liters/kilometer (L/km)
Velocity	mph	1.6093	kilometers/hour (km/h)
Length	inch	25.4	mm
	foot	0.3048	m
	yard	0.9144	m
	mile	1.609	km
Area	square inch (in^2)	645.2	mm^2
		6.45	cm^2
	square ft (ft^2)	0.0929	m^2
	square yard	0.8361	m^2
Volume	cubic inch (in^3)	16387.0	mm^3
		16.387	cm^3
		0.0164	liters (L)
	quart	0.9464	liters (L)
	gallon	3.7854	liters(L)
	cubic yard	0.7646	m^3
Mass	pound	0.4536	kg
	ton	907.18	kg
	ton	0.9078	tonne (t)
Force	kilogram	9.807	N
	ounce	0.2780	N
	pound	4.448	N
Temperature	degree Farenheit (°F)	(°F-32) 0.556	degree Celsius (°C)

Official Licensed Product

TORQUE SPECIFICATIONS

A. The following torque ranges are to be used for fitting and fastener diameters as indicated.

NOTE: 1) All finishes are S-2.
2) Bolt and nut specifications apply to both fine and coarse threads.

Diameter	Grade	N·m	Lb-Ft	Lb-In
1/4 Inch	5	10-13	—	89-115
5/16 Inch	5	17-23	12-17	—
3/8 Inch	8	43-56	32-41	—
7/16 Inch	8	68-95	50-70	—
1/2 Inch	8	102-142	75-105	—
9/16 Inch	8	149-203	110-150	—
5/8 Inch	8	204-277	150-205	—
3/4 Inch	8	299-406	220-300	—
7/8 Inch	8	489-650	360-480	—
1-0 Inch	8	733-989	540-730	—

B. Hydraulic brake system tube nuts

Thread Size	N·m	Lb-Ft
7/16-24	17-23	12-17
1/2-20	17-23	12-17

C. Power steering system hydraulic hose fittings and tube nuts

Thread Size	N·m	Lb-Ft
9/16-18	27-39	20-29
3/4-16	43-56	32-41
7/8-14	43-56	32-41

D. Hose clamps — worm gear type (with liner)

Hose OD	Installation Torque Range		Uniform Quality Audit Torque Minimum	
Inches	N·m	Lb-In	N·m	Lb-In
0.31-0.87	1.0-1.5	9-13	0.45	4
0.88-1.75	3.5-4.5	30-40	1.0	10
1.76-4.50	3.5-4.5	30-40	1.70	15
5.50-7.50	2.25-3.5	20-30	1.0	10

E. Oil filter system hose fitting and tube nuts

Thread Size	N·m	Lb-Ft
5/8–18	17–23	12–17

F. Fuel line system

1. Thermo plastic hose tube nuts

Thread Size	N·m	Lb-Ft	Lb-In
7/16-24	10-13	—	89-115
17/32-24	17-23	12-17	—
11/16-20	34-45	25-33	—
1-18	52-68	38-50	—

2. Steel tubing tube nuts for inverted flare fittings

Thread Size	N·m	Lb-Ft
1/2-20	17-23	12-17
5/8-18	27-39	20-29
3/4-18	27-39	20-29
1-1/16-16	43-56	32-41

3. SAE 37-degree and 45-degree flare fittings and hose couplings

Thread Size	N·m	Lb-Ft
9/16-18	17-23	12-17
5/8-18	17-23	12-17
3/4-16	27-39	20-29
7/8-14	43-56	32-41
1-1/16-14	43-56	32-41

TORQUE SPECIFICATIONS

G. Air brake system fittings

1. SAE 45-degree swivel nut flex hose connectors (for jounce hose, wire braid hose and Teflon®/stainless steel hose)

Thread Size	N·m	Lb-Ft	Lb-In
7/16-20	10-13	—	89-115
5/8-18	17-23	12-17	—
3/4-16	27-39	20-29	—
7/8-14	43-56	32-41	—
1 1/16-14	43-76	32-56	—
1 5/16-14	129-142	95-105	—
1 5/8-14	172-190	127-140	—

2. Copper tubing tube nuts

Thread Size	N·m	Lb-Ft	Lb-In
7/16-24	10-13	—	89-115
17/32-24	17-23	12-17	—
11/16-20	27-39	20-29	—
13/16-18	43-56	32-41	—

3. For 5/8-inch Teflon® hose assemblies

Assembly Type	N·m	Lb-In
45-Degree Swivel End	70-76	620-680
Copper Compression Tube	34-45	300-400

Official Licensed Product

4. Thermo-plastic (nylon) tube assembly compression fitting tube nuts

Tube Size	Thread Size	Assembly Torque			Minimum Audit Torque		
Inch		N·m	Lb-Ft	Lb-In	N·m	Lb-Ft	Lb-In
1/4	7/16-24	5.4-11	—	48-96	4.75	—	42
3/8	11/17-24	11-17	8-13	—	10	—	89
1/2	11/16-20	16-27	12-20	—	15	11	—
5/8	13/16-18	34-47	25-35	—	26	19	—
3/4	1-8	43-56	32-41	—	30	22	—

H. The following torque ranges are to be used for fastener diameters as indicated (metric coarse thread).

NOTE: 1) All finishes are S-2.

2) Torque specifications for critical applications should be developed using actual hardware and a statistically valid sample size.

3) All pipe thread fittings are to be tightened minimum two turns past hand-tight. Directional fittings to be oriented by positive tightening only.

Bolt or Nut Diameter	Class	N·m	Lb-Ft	Lb-In
M4	9.8	2.6-3.8	—	23-34
M5	9.8	5.0-8.0	—	44-71
M6	9.8	9-13	—	80-115
M8	9.8	21-32	15-24	—
M10	9.8	40-64	30-46	—
M12	9.8	60-95	44-70	—
M14	9.8	100-150	74-110	—
M16	9.8	155-230	114-170	—

Bolt or Nut Diameter	Class	N·m	Lb-Ft
M6	10.9	11-17	8-12
M8	10.9	28-42	21-31
M10	10.9	54-82	40-60
M12	10.9	80-120	59-88
M14	10.9	130-190	96-140
M16	10.9	200-295	147-217
M20	10.9	395-570	291-420
M24	10.9	685-985	505-726

Alphabetical Index

A

Accelerator Pedal and Linkage 10-02-1
Accelerator Cable 10-02-11
Accelerator Cable Bracket 10-02-6
Accelerator Cable, F-250 Heavy Duty, F-350 and F-Super Duty 10-02-3
Accelerator Cable, F-Super Duty Motorhome 10-02-5
Accelerator Pedal and Linkage 10-02-1
Accelerator Pedal and Sensor Assembly, Diesel Engine 10-02-3
Accelerator Pedal and Shaft 10-02-6
Adjustments 10-02-11
Description and Operation 10-02-1
Diagnosis and Testing 10-02-1
Inspection and Verification 10-02-1
Pinpoint Tests 10-02-2
Removal and Installation 10-02-3
Specifications 10-02-11
Symptom Chart 10-02-1

Air Intake System 03-12-1
Air Cleaner Element 03-12-1, 03-12-8
Air Cleaner Element, 7.3L Direct Injection Diesel Engine 03-12-3
Air Cleaner Outlet Tube, 7.3L Direct Injection Diesel Engine 03-12-7
Air Induction System 03-12-1
Air Inlet Restriction Check 03-12-8
Air Intake System 03-12-2
Air Restriction Gauge 03-12-2
Cleaning and Inspection 03-12-8
Description and Operation 03-12-1
Diagnosis and Testing 03-12-2
Engine Air Cleaner 03-12-8
Engine Air Cleaner Intake Duct and Tube, 7.3L Direct Injection Diesel Engine 03-12-2
Engine Air Cleaner, Gasoline Engines 03-12-3
Removal and Installation 03-12-2
Specifications 03-12-8

Axle and Driveshaft, Service 05-00-1
Adjustments 05-00-32
Alignment Inspection, Rear Axle and Suspension 05-00-6
Alternate Procedure 05-00-34

Axle and Driveshaft, Service (Continued)
Analysis of Gear Noise 05-00-17
Analysis of Inoperative Conditions 05-00-19
Analysis of Leakage 05-00-10
Analysis of Vibration 05-00-11
Anti-Lock Speed Sensor Ring 05-00-31
Axle Backlash Check 05-00-30
Axle Identification Tag 05-00-2
Axle Lubrication, Rear 05-00-36
Axle Noise 05-00-16
Axles 05-00-32
Bearing Cups and Cone and Roller Assemblies 05-00-31
Bearing Rumble 05-00-19
Brake System, Anti-Lock, Rear 05-00-5
Cleaning and Inspection 05-00-30
Component Tests 05-00-23
Coupling Shaft Angle Adjustment 05-00-32
Description and Operation 05-00-2
Diagnosis and Testing 05-00-5
Differential Case 05-00-31
Differential Housing 05-00-31
Draining and Filling 05-00-37
Driveline Angle Correction 05-00-32
Driveline Support Plate Position, Adjustable 05-00-32
Driveline Vibration 05-00-23
Driveshaft Alignment 05-00-32
Driveshaft and Pinion Angle Adjustment 05-00-32
Driveshaft Runout and Balance 05-00-33
Driveshaft, Front 05-00-3
Driveshaft, Rear 05-00-3
Driving Axle, Front 05-00-5
Driving Axle, Rear 05-00-5
Engine Angle Adjustments 05-00-33
Gear Tooth Contact Pattern Check 05-00-28
Gears 05-00-31
Inspection After Disassembly of the Axle 05-00-31
Inspection and Verification 05-00-5
Inspection Before Disassembly of Axle 05-00-30
Limited Slip Differential 05-00-26
Limited Slip Differential Parts 05-00-31
Lubrication 05-00-36
Noise Acceptability 05-00-7
Pinion and Ring Gear Adjustment 05-00-35
Preliminary Diagnosis 05-00-7
Rear Brake Anti-Lock Sensor 05-00-31
Slip Yoke 05-00-37

Ford Motor Company Official Licensed Reproduction

Alphabetical Index

Axle and Driveshaft, Service (Continued)
Slip Yoke Spline 05-00-36
Special Service Tools/Equipment 05-00-43
Specifications 05-00-37
Symptom Chart 05-00-20
U-Joint Inspection 05-00-6
U-Joint Phasing 05-00-32
U-Joints 05-00-37
Universal Joint Flange Runout Check, Rear Axle 05-00-26
Universal Joint Flange, Rear Axle 05-00-31
Wheel Bearing and Seal 05-00-31

Axle, Front Drive, Dana Model 50 ..... 05-03A-1
Axle Housing Pivot Bushing 05-03A-20
Axle, Front 05-03A-7
Axle, Front Drive 05-03A-1
05-03A-7
Bearing Cup and Drive Pinion Installation 05-03A-26
Cardan-Type U-Joints 05-03A-21
Carrier 05-03A-21
Depth Gauge Check 05-03A-25
Description and Operation 05-03A-1
Diagnosis and Testing 05-03A-7
Differential Case 05-03A-27
Differential Case Assembly to Carrier 05-03A-28
Differential Seal, LH 05-03A-20
Disassembly and Assembly 05-03A-21
Drive Pinion Installation 05-03A-23
Drive Pinion Preload Check 05-03A-26
Gear Tooth Contact Pattern Check 05-03A-30
Hubs, Automatic Locking 05-03A-1
Hubs, Manual Locking 05-03A-1
Pinion and Ring Gear Backlash 05-03A-28
Removal and Installation 05-03A-7
Slip Yoke, RH, and Stub Shaft Assembly, Carrier, Carrier Oil Seal and Bearing 05-03A-17
Special Service Tools/Equipment 05-03A-31
Specifications 05-03A-30
Spindle, RH and LH Shaft and Joint Assembly 05-03A-12
Steering Knuckle 05-03A-10
Total Differential Case End Play 05-03A-22

Axle, Front Drive, Dana Model 60 Monobeam 05-03B-1
Assembly of Differential Into Housing 05-03B-26

Axle, Front Drive, Dana Model 60 Monobeam (Continued)
Axle Shaft 05-03B-2
05-03B-29
Axle, Front 05-03B-9
Axle, Front Drive 05-03B-1
05-03B-2
Depth Gauge Check 05-03B-23
Description and Operation 05-03B-1
Diagnosis and Testing 05-03B-2
Differential Case 05-03B-19
Disassembly and Assembly 05-03B-13
Drive Pinion Oil Seal 05-03B-13
Gear Tooth Contact Pattern Check 05-03B-29
Locking Hubs 05-03B-1
Pinion Bearing Cup Installation 05-03B-22
Pinion Bearing Preload and Final Depth Check 05-03B-24
Pinion, Drive Gear and Differential Case Carrier 05-03B-13
Removal and Installation 05-03B-2
Ring Gear and Pinion Backlash 05-03B-26
Special Service Tools/Equipment 05-03B-30
Specifications 05-03B-29
Steering Knuckle and Upper and Lower Ball Joints 05-03B-6

Axle, Rear, Dana 05-02C-1
Adjustments 05-02C-24
Assembly of Differential into Housing 05-02C-21
Axle Assembly 05-02C-13
Axle Disassembly 05-02C-6
Axle Shaft, Rear, Full-Floating Axle 05-02C-6
Axle, Rear 05-02C-6
Axle, Rear Dana 05-02C-3
Axle, Rear, Dana 05-02C-1
Bearing Cups 05-02C-24
Brake Sensor Ring, Anti-Lock 05-02C-24
Carrier Housing 05-02C-24
Cleaning and Inspection 05-02C-23
Cone and Roller Assemblies 05-02C-24
Description and Operation 05-02C-1
Diagnosis and Testing 05-02C-3
Differential Case 05-02C-24
Differential Case Assembly 05-02C-13
Differential Case Disassembly 05-02C-8
Differential Case End Play Check 05-02C-15
Differential Case Removal 05-02C-6
Disassembly and Assembly 05-02C-6

Alphabetical Index

Axle, Rear, Dana (Continued)
Drive Pinion Removal 05-02C-10
Drive Pinion Seal 05-02C-3
Fasteners 05-02C-27
Gear Tooth Contact Pattern Check 05-02C-26
Gears 05-02C-24
Inspection After Disassembly 05-02C-24
Inspection Before Disassembly 05-02C-23
Oil Seal and Wheel Bearing, Full-Floating Axle 05-02C-6
Pinion Bearing Cup Installation 05-02C-17
Pinion Bearing Cup Removal 05-02C-11
Pinion Flange (End Yoke) 05-02C-24
Pinion Position Shim Selection 05-02C-18
Pinion Ring Gear Variation Number 05-02C-16
Removal and Installation 05-02C-3
Ring Gear and Pinion Backlash 05-02C-21
05-02C-24
Ring Gear and Pinion Tooth Pattern Interpretation 05-02C-26
Special Service Tools/Equipment 05-02C-28
Specifications 05-02C-27

C

Clutch Controls 08-02-1
Adjustments 08-02-9
Alternate Method 08-02-10
Bench Bleed Procedure, Clutch Master Cylinder 08-02-10
Cleaning and Inspection 08-02-8
Clutch and Brake Pedal Pivot Shaft Lever 08-02-3
Clutch Control System 08-02-1
Clutch Controls 08-02-2
08-02-8
Clutch Hydraulic Line 08-02-4
Clutch Hydraulic System Bleeding, Concentric Cylinder Clutch Slave, 5.8L Engine 08-02-9
Clutch Hydraulic System Bleeding, External Cylinder Clutch Slave, 7.3L Diesel and 7.5L Gasoline Engines 08-02-9
Clutch Master Cylinder 08-02-2
Clutch Master Cylinder and Reservoir 08-02-4
Clutch Pedal 08-02-1
08-02-2
08-02-9

Clutch Controls (Continued)
Clutch Pedal Position Switch 08-02-1
08-02-3
Clutch Release Hub and Bearing 08-02-7
Clutch Release Lever, 7.3L Diesel and 7.5L Gasoline Engines 08-02-8
Cylinder, Clutch Slave 08-02-2
Cylinder, Clutch Slave, 5.8L Engine 08-02-6
Cylinder, Clutch Slave, 7.3L Diesel and 7.5L Gasoline Engines 08-02-7
Description and Operation 08-02-1
Diagnosis and Testing 08-02-2
Fluid Level 08-02-10
Removal and Installation 08-02-2
Special Service Tools/Equipment 08-02-11
Specifications 08-02-11

Clutch Pedal Position (CPP) Switch 07-14-1
Adjustments 07-14-3
Clutch Pedal Position (CPP) Switch 07-14-1
07-14-2
07-14-3
Clutch Pedal Position Switch 07-14-1
Component Test 07-14-2
Description and Operation 07-14-1
Diagnosis and Testing 07-14-1
Electrical Schematic Reference(s) 07-14-1
Inspection and Verification 07-14-1
Removal and Installation 07-14-2
Special Service Tools/Equipment 07-14-3
Symptom Chart 07-14-2

Clutch System, Service 08-00-1
Adjustments 08-00-6
Cleaning and Inspection 08-00-4
Clutch Disc 08-00-4
Clutch Hydraulic Fluid Level Check 08-00-6
Clutch Hydraulic System Bleeding 08-00-7
Clutch Master Cylinder 08-00-6
Clutch Master Cylinder Push Rod Adjustment 08-00-7
Clutch Pedal 08-00-6
Clutch Pedal Position Switch 08-00-3
Clutch Pressure Plate 08-00-4
Clutch Release Hub and Bearing 08-00-5
Clutch Release Lever (7.3L Diesel and 7.5L Gasoline Engines) 08-00-6

Official Licensed Product

Alphabetical Index

Clutch System, Service (Continued)
Clutch Slave Cylinder Push Rod Travel Measurement, 7.3L Diesel and 7.5L Gasoline Engines, External Clutch Slave Cylinder Applications 08-00-6
Clutch System 08-00-1
Component Tests 08-00-3
Cylinder, Clutch Slave 08-00-6
Description and Operation 08-00-1
Diagnosis and Testing 08-00-2
Dowels, Flywheel 08-00-3
Dowels, Transmission Housing to Block 08-00-3
Flywheel 08-00-5
Flywheel Housing 08-00-6
Flywheel Runout Check 08-00-5
Inspection and Verification 08-00-2
Removal and Installation 08-00-3
Special Service Tools/Equipment 08-00-7
Specifications 08-00-7
Symptom Chart 08-00-2
Transmission Input Shaft Pilot Bearing 08-00-4
Transmission Input Shaft Pilot Bearing, Needle Type 08-00-5
Transmission Input Shaft Spline 08-00-6

Clutch/Pressure Plate 08-01-1
Adjustments 08-01-5
Cleaning and Inspection 08-01-5
Clutch 08-01-5
Clutch Release Hub and Bearing 08-01-5
Clutch Release Lever 08-01-5
Clutch System 08-01-1
Clutch/Pressure Plate 08-01-1
08-01-5
Description and Operation 08-01-1
Diagnosis and Testing 08-01-1
Disc and Pressure Plate 08-01-1
Flywheel 08-01-4
Removal and Installation 08-01-1
Ring Gear, Flywheel 08-01-5
Special Service Tools/Equipment 08-01-6
Specifications 08-01-6
Transmission Input Shaft Pilot Bearing 08-01-4

D

Differential, Dana Model 80 Locking Axle 05-02E-1
Adjustments 05-02E-15
Brakes and Backlash 05-02E-15
Component Tests 05-02E-11
Description and Operation 05-02E-1
Diagnosis and Testing 05-02E-7
Differential 05-02E-1
05-02E-7
Differential Case 05-02E-12
05-02E-13
Disassembly and Assembly 05-02E-13
Inspection and Verification 05-02E-7
Removal and Installation 05-02E-12
Specifications 05-02E-16
Symptom Chart 05-02E-8

Differential, Limited Slip, Ford 10.25-Inch Ring Gear 05-02B-1
Description and Operation 05-02B-1
Diagnosis and Testing 05-02B-2
Differential Bearings 05-02B-2
Differential Case 05-02B-3
Differential, Limited Slip 05-02B-1
05-02B-2
Disassembly and Assembly 05-02B-3
Removal and Installation 05-02B-2
Special Service Tools/Equipment 05-02B-10
Specifications 05-02B-10

Drive Belts, Accessory 03-05-1
Adjustments 03-05-12
Belt Tensioner Pulley Replacement 03-05-8
Component Tests 03-05-4
Description and Operation 03-05-1
Diagnosis and Testing 03-05-2
Drive Belt Replacement 03-05-7
Drive Belt Tension Adjustment, Manually Tensioned Belts, 7.5L Gasoline Engine 03-05-12
Drive Belt Tensioner, Automatic 03-05-8
03-05-13
Drive Belt, Serpentine (Poly-V) 03-05-7
Drive Belts, Accessory 03-05-1
03-05-2
Fan and Clutch, 5.8L and 7.5L Engines 03-05-10
Fan and Clutch, 7.3L Diesel 03-05-11

Alphabetical Index

Drive Belts, Accessory (Continued)
Inspection and Verification 03-05-2
Manually Tensioned Belts 03-05-9
Power Steering Pulley Alignment 03-05-13
Removal and Installation 03-05-7
Special Service Tools/Equipment 03-05-14
Specifications 03-05-14
Symptom Chart 03-05-3

Driveshaft 05-01-1
Adjustments 05-01-19
Center Bearing 05-01-19
Description and Operation 05-01-1
Diagnosis and Testing 05-01-8
Disassembly and Assembly 05-01-13
Driveline Support Plate, Adjustable, F-Super Duty Motorhome Chassis 05-01-19
Driveshaft 05-01-1, 05-01-8
Driveshaft Alignment 05-01-19
Driveshaft with Double Cardan U-Joint 05-01-5
Driveshaft with Single Cardan U-Joint 05-01-3
Driveshaft, Double Cardan Universal Joint 05-01-15
Driveshaft, Front Axle 05-01-6
Driveshaft, Front, F-250 Heavy Duty 05-01-8
Driveshaft, Front, with Double Cardan U-Joint, F-350 4x4 05-01-8
Driveshaft, Rear, One-Piece 05-01-9
Driveshaft, Single Cardan Universal Joint 05-01-13
Driveshaft, Two- or Three-Piece, F-Super Duty Motorhome Chassis Vehicles 05-01-10
Driveshaft/Coupling Shaft, Two-Piece (Except F-Super Duty Motorhome Chassis) 05-01-9
Removal and Installation 05-01-8
Slip Between Center Driveshaft 05-01-17
Special Service Tools/Equipment 05-01-21
Specifications 05-01-21
Universal Joints 05-01-7

E

Engine and Transmission Mounting 02-03-1
Removal 02-03-1
Special Service Tools/Equipment 02-03-12
Specifications 02-03-11
Support Bracket, Transmission 02-03-2

Engine and Transmission Mounting (Continued)
Support Insulator, Rear Transmission 02-03-2
Support Insulators, Front Engine 02-03-1
Support Insulators, Front Engine, 7.3L Diesel 02-03-2

Engine Controls, Electronic 03-14-1
Accelerator Pedal (AP) Position Sensor 03-14-2, 03-14-9, 03-14-19
Adjustments 03-14-19
Barometric Pressure (BARO) Sensor 03-14-4, 03-14-14
Camshaft Position (CMP) Sensor 03-14-6, 03-14-18
Cleaning and Inspection 03-14-19
Description and Operation 03-14-1
Diagnosis and Testing 03-14-7
Diesel Engine 03-14-10
Engine Control Systems, Electronic 03-14-1
Engine Controls, Electronic 03-14-7
Engine Coolant Temperature (ECT) Sensor 03-14-4, 03-14-12
Engine Oil Temperature (EOT) Sensor 03-14-3, 03-14-12
Exhaust Back Pressure (EBP) Sensor 03-14-4, 03-14-17
Exhaust Back Pressure Regulator (EPR) 03-14-5, 03-14-18
Gasoline Engines 03-14-10
Heated Oxygen Sensor (HO2S) 03-14-6, 03-14-15
Idle Air Control (IAC) Valve 03-14-3, 03-14-11
Idle Air Control Valve 03-14-19
Idle Validation Switch (IVS) 03-14-3, 03-14-9
Injection Control Pressure (ICP) Sensor 03-14-5, 03-14-14
Injection Control Pressure Regulator 03-14-15
Injection Pressure Regulator (IPR) 03-14-5
Injector Driver Module (IDM) 03-14-2, 03-14-10
Intake Air Temperature (IAT) Sensor 03-14-3, 03-14-10
Manifold Absolute Pressure (MAP) Sensor 03-14-4, 03-14-13

Ford Motor Company Official Licensed Product

Alphabetical Index

Engine Controls, Electronic (Continued)
Manifold Absolute Pressure (MAP) Sensor, Diesel Engine 03-14-13
Mass Airflow (MAF) Sensor 03-14-3
03-14-9
Misfire Sensor 03-14-6
03-14-9
Powertrain Control Module (PCM) 03-14-2
03-14-8
Removal and Installation 03-14-7
Safeguards 03-14-7
Special Service Tools/Equipment 03-14-19
Specifications 03-14-19
Throttle Position (TP) Sensor 03-14-2
03-14-8
03-14-19
Vehicle Speed Sensor (VSS) 03-14-6
03-14-18

Engine Cooling 03-03-1
Aluminum Core Downflow 03-03-22
Aluminum Core, Crossflow 03-03-4
Aluminum Core, Downflow 03-03-4
Approved Coolant and Concentration 03-03-3
Block Heater 03-03-31
Block Heater Wiring 03-03-28
Cleaning and Inspection 03-03-31
Component Tests 03-03-10
Constant Tension Hose Clamp 03-03-14
Coolant 03-03-3
Coolant Condition Check 03-03-31
Coolant Disposal 03-03-4
Coolant in Oil 03-03-35
Coolant Mixture 03-03-38
Coolant Recovery System 03-03-4
Cooling Fan and Fan Clutch 03-03-4
Cooling Fan Blade and Fan Clutch, Mechanical 03-03-25
Cooling System 03-03-1
Cooling System Flush Procedure 03-03-34
Cooling System Hoses and Clamps 03-03-33
Cooling System Part Numbers/Application Chart 03-03-38
Cooling System, Cleaning 03-03-34
Cooling System, Draining, Filling and Bleeding 03-03-33
Description and Operation 03-03-1
Diagnosis and Testing 03-03-5
Electrical System 03-03-4

Engine Cooling (Continued)
Engine Block Heater 03-03-5
Engine Coolant Temperature (ECT) Sensor 03-03-28
Engine Cooling System 03-03-5
Engine Oil Cooler 03-03-5
Fan Blade 03-03-35
Fuel in Coolant Leak 03-03-37
Heater Core Back-Flushing 03-03-34
Inspection and Verification 03-03-5
Installation 03-03-27
Internal 03-03-35
Oil Cooler 03-03-2
Pinpoint Tests 03-03-6
Pressure Relief Cap 03-03-34
Radiator 03-03-4
03-03-35
Radiator — Diesel Engine 03-03-18
Radiator — Gas Engine 03-03-17
Radiator Coolant Level Check 03-03-31
Radiator Coolant Recovery Reservoir 03-03-23
Radiator Draincock 03-03-27
Radiator Hoses, Upper and Lower 03-03-14
Removal and Installation 03-03-12
Service Procedures 03-03-31
Special Service Tools/Equipment 03-03-39
Specifications 03-03-38
Symptom Chart 03-03-6
Thermostat, Water 03-03-4
03-03-12
Transmission Oil Cooler Connection Leaks, Aluminum Radiator 03-03-31
Unsatisfactory Coolant Materials and Supplementary Coolant Additives 03-03-3
V-8, Gasoline 03-03-12
Water Bypass Hose 03-03-15
Water Inlet Tube, 7.3L Diesel Only 03-03-17
Water Pump 03-03-14
Water Temperature Indicator Sender Unit Gasoline Engines 03-03-27

Engine Emission Control 03-08-1
Cleaning and Inspection 03-08-5
Crankcase Ventilation Connector and Hose 03-08-4
Description and Operation 03-08-1
Diagnosis and Testing 03-08-4
EGR Control Solenoid 03-08-5
03-08-6

Official Licensed Product
Ford Motor Company

Alphabetical Index

Engine Emission Control (Continued)
EGR Valve 03-08-4
03-08-6
EGR Valve Position Sensor 03-08-5
EGR Valve to Exhaust Manifold Tube 03-08-4
Engine Emission Control 03-08-4
Exhaust Emission Control System 03-08-2
Exhaust Gas Recirculation (EGR) System 03-08-2
In-Vehicle Service 03-08-4
Oil Separator Hose 03-08-4
PCV Hoses 03-08-4
PCV Valve 03-08-4
03-08-5
Positive Crankcase Ventilation (PCV) System 03-08-1
Removal and Installation 03-08-5
Secondary Air Injection Bypass (AIRB) Valve 03-08-3
03-08-5
Secondary Air Injection Diverter (AIRD) Valve 03-08-3
Secondary Air Injection Diverter (AIRD) Valve, 5.8L Typical 03-08-5
Secondary Air Solenoid 03-08-6
Specifications 03-08-6
Vehicle Emission Control Information Decal 03-08-2

Engine, 5.8L MFI 03-01A-1
Adjustments 03-01A-52
Camshaft 03-01A-3
03-01A-22
Camshaft Bearings 03-01A-36
Camshaft Rear Bearing Cover 03-01A-34
Connecting Rod Bearings 03-01A-32
Crankshaft 03-01A-3
03-01A-37
Crankshaft Main Bearings 03-01A-28
Crankshaft Pulley Damper/Crankshaft Front Seal 03-01A-19
Crankshaft Rear Oil Seal 03-01A-33
Cylinder Block Assembly 03-01A-51
Cylinder Block, Bare 03-01A-51
Cylinder Head 03-01A-46
Cylinder Head(s) 03-01A-17
Description and Operation 03-01A-1
Disassembly and Assembly 03-01A-39
Drive Belt System 03-01A-4
Emission Calibration Label 03-01A-2

Engine, 5.8L MFI (Continued)
Engine 03-01A-1
03-01A-35
03-01A-39
Engine Code Information 03-01A-2
Engine Components 03-01A-4
Engine Cooling System 03-01A-4
Engine Front Cover 03-01A-20
Engine Identification 03-01A-2
Engine Lubrication System 03-01A-4
Exhaust Emission Control System 03-01A-3
Exhaust Manifolds, Right and Left 03-01A-23
Flywheel 03-01A-32
General Specifications 03-01A-53
In-Vehicle Service 03-01A-4
Induction System 03-01A-3
Intake Manifold, Lower 03-01A-14
Intake Manifold, Upper 03-01A-13
Left Side Valve Cover 03-01A-9
Oil Filter/Adapter/Oil Cooler 03-01A-34
Oil Level Indicator Tube 03-01A-34
Oil Pan 03-01A-4
Oil Pan/Oil Pump Screen Cover and Tube 03-01A-25
Oil Pump 03-01A-4
03-01A-27
03-01A-50
Pistons and Connecting Rods 03-01A-30
Pistons, Piston Pins and Rings 03-01A-47
Positive Crankcase Ventilation System 03-01A-3
Removal and Installation 03-01A-35
Right Side Valve Cover 03-01A-10
Rocker Arm 03-01A-11
Sensor, Oil Pressure Sender/Switch 03-01A-35
Special Service Tools/Equipment 03-01A-58
Specifications 03-01A-53
Subassemblies 03-01A-46
Timing Chains and Sprockets 03-01A-21
Valve Clearance 03-01A-52
Valve Cover and Gasket 03-01A-9
Valve Spring, Retainer and Valve Stem Seal 03-01A-11
Valve Tappet, Hydraulic 03-01A-12
03-01A-51
Valve Train 03-01A-3
Water Pump 03-01A-19

Engine, 7.3L Diesel 03-01C-1
Adjustments 03-01C-78
Assembly 03-01C-72

Official Licensed Product
Ford Motor Company

Alphabetical Index

Engine, 7.3L Diesel (Continued)

Camshaft 03-01C-35
03-01C-70
Camshaft Bearings 03-01C-37
Camshaft Drive Gear and Thrust Plate 03-01C-35
Camshaft Timing — Front Cover Installed 03-01C-70
Cleaning and Inspection 03-01C-62
Components 03-01C-6
Compressor Manifold and Hoses 03-01C-33
Connecting Rod Bearings 03-01C-65
Connecting Rods 03-01C-68
Cooling System 03-01C-16
Core Plugs — Cup Type 03-01C-64
Crankcase Breather Assembly 03-01C-33
Crankshaft 03-01C-55
03-01C-65
Crankshaft Damper 03-01C-23
03-01C-66
Crankshaft Gear 03-01C-35
Crankshaft Rear Oil Seal 03-01C-49
Cylinder Block 03-01C-59
03-01C-62
Cylinder Head 03-01C-57
Cylinder Head Flatness 03-01C-74
Cylinder Head, Left 03-01C-44
Cylinder Head, Right 03-01C-40
Cylinder Heads 03-01C-73
Description and Operation 03-01C-2
Diagnosis and Testing 03-01C-17
Disassembly 03-01C-72
Disassembly and Assembly 03-01C-57
Drive Gear Backlash (All Gears) 03-01C-62
Drive Gears 03-01C-66
Engine 03-01C-17
03-01C-78
Engine Description 03-01C-2
Engine Front Cover 03-01C-34
Engine Identification 03-01C-3
Engine Oil Cooler 03-01C-57
03-01C-61
Engine Rear Cover 03-01C-48
Exhaust Manifold, Left 03-01C-39
Exhaust Manifold, Right 03-01C-38
Exhaust Manifolds 03-01C-78
Fitting Main Bearings or Connecting Rod Bearings with Plastigage® 03-01C-64
Flywheel 03-01C-47
Flywheel Clutch Face Machining 03-01C-78
Flywheel Inspection 03-01C-78

Engine, 7.3L Diesel (Continued)

Flywheel, Dual Mass 03-01C-47
Fuel Supply Pump 03-01C-26
Grinding Limits 03-01C-66
High-Pressure System 03-01C-15
Intake Manifold 03-01C-77
Intake Manifold Covers 03-01C-33
Journals, Refinishing 03-01C-66
Low-Pressure System 03-01C-14
Lubrication System 03-01C-14
Main Bearings 03-01C-64
Main Bearings and Connecting Rod Bearings 03-01C-64
Mass Flywheel, Dual — Manual Transmission 03-01C-13
Oil Cooler Internal Leakage Test 03-01C-61
Oil Filter 03-01C-56
Oil Gallery Plugs 03-01C-60
Oil Pan 03-01C-73
Oil Pan and Oil Pump Screen Cover and Tube 03-01C-50
Oil Pump 03-01C-52
Oil Pump Inspection 03-01C-72
Oil Seal, Crankshaft — Front 03-01C-26
Piston and Connecting Rod 03-01C-53
03-01C-60
Piston Pins, Fitting 03-01C-67
Piston Rings, Fitting 03-01C-67
Pistons, Fitting 03-01C-67
Pistons, Piston Pins and Piston Rings 03-01C-67
Push Rods 03-01C-77
Removal and Installation 03-01C-17
Rocker Arm 03-01C-77
Rocker Arm Cover, Rocker Arm and Push Rod, Left 03-01C-30
Rocker Arm Cover, Rocker Arm and Push Rod, Right 03-01C-27
Service Limit Specifications 03-01C-62
Service Procedures 03-01C-61
Special Service Tools/Equipment 03-01C-84
Specifications 03-01C-79
Torque Wrench Information 03-01C-83
Transmission, Automatic 03-01C-78
Transmission, Manual 03-01C-78
Valve Face Runout 03-01C-75
Valve Guide Removal 03-01C-76
Valve Seat Refacing 03-01C-76
Valve Seat Runout 03-01C-76
Valve Spring Squareness 03-01C-77

Official Licensed Product Ford Motorcraft®

Alphabetical Index

Engine, 7.3L Diesel (Continued)
Valve Spring Tension 03-01C-76
Valve Spring, Valve Spring Retainer and Valve Stem Seal 03-01C-32
Valve Stem-to-Valve Guide Clearance 03-01C-75
Valve Tappet 03-01C-33
Valve Tappets 03-01C-72
Valves 03-01C-74
Valves, Refacing 03-01C-75
Water Pump 03-01C-22
Water Thermostat 03-01C-21

Engine, 7.5L MFI 03-01B-1
Adjustments 03-01B-58
Camshaft 03-01B-3
03-01B-32
Camshaft Bearings 03-01B-50
Camshaft Rear Bearing Cover 03-01B-44
Connecting Rod Bearings 03-01B-42
Crankshaft 03-01B-3
03-01B-39
03-01B-52
Crankshaft Main Bearings 03-01B-39
Crankshaft Pulley/Damper/Crankshaft Front Seal 03-01B-24
Crankshaft Rear Oil Seal 03-01B-43
Cylinder Block Assembly 03-01B-58
Cylinder Block, Bare 03-01B-58
Cylinder Head 03-01B-55
Cylinder Heads 03-01B-20
Description and Operation 03-01B-1
Disassembly and Assembly 03-01B-55
Drive Belt System 03-01B-6
Emission Calibration Label 03-01B-2
Engine 03-01B-1
03-01B-47
03-01B-55
Engine Code Information 03-01B-2
Engine Components 03-01B-6
Engine Cooling System 03-01B-4
Engine Front Cover 03-01B-26
Engine Identification 03-01B-2
Engine Lubrication System 03-01B-3
Exhaust Emission Control System 03-01B-3
Exhaust Manifolds 03-01B-34
Flywheel 03-01B-42
In-Vehicle Service 03-01B-6
Induction System 03-01B-3
Intake Manifold, Lower 03-01B-18

Engine, 7.5L MFI (Continued)
Intake Manifold, Upper 03-01B-15
Mainshaft Bearing Roller 03-01B-43
Oil Bypass Filter/Adapter/Oil Cooler 03-01B-44
Oil Level Indicator Tube 03-01B-46
Oil Pan 03-01B-4
Oil Pan/Oil Pump Screen Cover and Tube 03-01B-36
Oil Pressure Sender 03-01B-47
Oil Pump 03-01B-3
03-01B-39
Pistons and Connecting Rods 03-01B-40
Pistons, Piston Pins and Rings 03-01B-56
Positive Crankcase Ventilation System 03-01B-3
Removal and Installation 03-01B-47
Rocker Arm 03-01B-12
Sensors 03-01B-47
Special Service Tools/Equipment 03-01B-64
Specifications 03-01B-59
Subassemblies 03-01B-55
Timing Chain and Sprockets 03-01B-29
Valve Clearance 03-01B-58
Valve Cover and Gasket 03-01B-11
Valve Spring, Retainer and Valve Stem Seal 03-01B-13
Valve Tappet, Hydraulic 03-01B-14
03-01B-57
Valve Train 03-01B-3
Water Pump 03-01B-25

Engine, Service 03-00-1
Bore Gauge Method 03-00-23
Cam Lobe Lift (Camshaft Removed) 03-00-28
Camshaft Bearings 03-00-28
Camshaft End Play 03-00-15
Camshaft Journal Diameters 03-00-28
Camshaft Journal Oil Clearance 03-00-28
Camshaft Journals 03-00-27
Camshaft Lobe Lift 03-00-14
Camshaft Runout 03-00-27
Camshaft Sprocket 03-00-29
Cleaning and Inspection 03-00-17
Compression Gauge Check 03-00-8
Compression Readings Interpreting — Gasoline Engines 03-00-9
Compression Test 03-00-8
Connecting Rod Side Clearance 03-00-16
Connecting Rods 03-00-27
Crankshaft 03-00-23

Official Licensed Product

Alphabetical Index

Engine, Service (Continued)
Crankshaft End Play 03-00-16
03-00-24
Crankshaft Main and Connecting Rod Bearings 03-00-21
Crankshaft Main or Connecting Rod Bearings, Fitting 03-00-22
Crankshaft Runout 03-00-24
Crankshaft Sprocket 03-00-24
Cylinder Block 03-00-17
Cylinder Block Distortion 03-00-17
Cylinder Bore 03-00-19
Cylinder Bore Diameter 03-00-20
Cylinder Bore Taper 03-00-19
Cylinder Head Deck Flatness 03-00-17
Cylinder Heads 03-00-32
Cylinder Leakage Detector 03-00-9
Cylinder Out-of-Round 03-00-19
Cylinder Reboring 03-00-20
Cylinder Wall Honing 03-00-20
Cylinder Walls, Refinishing 03-00-18
Description and Operation 03-00-3
Diagnosis and Testing 03-00-4
Emission Calibration Number Label 03-00-3
Engine 03-00-4
Engine Block Plugs 03-00-20
Engine Identification 03-00-3
Engine Oil Consumption, Excessive 03-00-11
Engine Oil Leaks 03-00-7
Example Readings 03-00-9
Exhaust Emission Control System 03-00-4
Exhaust Manifold 03-00-37
Fluorescent Oil Additive Method 03-00-7
Flywheel Clutch Surface Machining 03-00-38
Flywheel Dimensions 03-00-39
Flywheel Housing Deck Flatness 03-00-17
Flywheel Inspection 03-00-38
Flywheel Runout, Manual Transmission 03-00-16
Hard Start — No Start Dry Reservoir 03-00-31
Hydraulic Valve Tappet 03-00-15
Hydraulic Valve Tappets 03-00-29
Inspection and Verification 03-00-4
Intake Manifold 03-00-37
Intake Manifold Vacuum Test 03-00-10
Introduction 03-00-3
Journals, Refinishing 03-00-24
Leak-Down Testing 03-00-29
Leakage Points 03-00-7
Main Bearing Bore Alignment 03-00-17

Engine, Service (Continued)
Oil Consumption Test 03-00-12
Oil Leak and Valve Guide Seal Test 03-00-10
Oil Pan 03-00-32
Oil Pressure Test 03-00-13
Oil Pump, 7.3L Diesel Engine 03-00-31
Oil Pump, Gasoline Engines 03-00-30
Outer Rotor-to-Pump Body Clearance 03-00-31
Piston and Piston Pin Fit 03-00-26
Piston Pin-to-Piston Clearance 03-00-27
Piston Ring End Gap 03-00-26
Piston Rings — Fitting 03-00-25
Pistons — Fitting 03-00-24
Pistons, Piston Pins and Piston Rings 03-00-24
Plastigage® Method 03-00-22
Positive Crankcase Ventilation (PCV) System, Closed-Type 03-00-7
Pressure Regulator Valve Inspection 03-00-31
Pressure Regulator Valve Spring Inspection 03-00-31
Pressure Regulator Valve-to-Housing Clearance 03-00-31
Push Rods 03-00-13
03-00-14
03-00-37
Removal and Installation 03-00-20
Rocker Arm 03-00-13
03-00-14
03-00-37
Rocker Arm Cover Removed 03-00-13
Rotor Clearance 03-00-31
Safety Certification Decal 03-00-3
Sand Holes or Porous Engine Castings — Service 03-00-18
Service Limit Specifications 03-00-17
Service Procedures 03-00-7
Special Service Tools/Equipment 03-00-39
Specifications 03-00-38
Symptom Chart 03-00-5
Timing Chain Deflection (5.8L and 7.5L) 03-00-15
Tooth Tip Clearance 03-00-31
Transmission, Automatic 03-00-38
Transmission, Manual 03-00-38
Vacuum Gauge Readings, Interpretation 03-00-10
Valve Spring Retainer and Valve Spring Retainer Keys 03-00-13
Valve Springs 03-00-13
Valve Train Analysis, Dynamic 03-00-14
Valve Train Analysis, Static (Engine Off) 03-00-13

Alphabetical Index

Engine, Service (Continued)
Valves and Cylinder Head 03-00-13
03-00-14
Valves, Refacing 03-00-36

Evaporative Emission 03-13-1
Description and Operation 03-13-1
Diagnosis and Testing 03-13-6
Engine Evaporative Emission System 03-13-2
Evaporative Emission 03-13-6
Evaporative Emission Canister 03-13-3
03-13-7
Evaporative Emission Canister Purge Regulator Valve 03-13-16
Evaporative Emission Canister Purge Valve 03-13-3
Evaporative Emission Control System 03-13-1
Evaporative Emission Hose 03-13-3
03-13-8
Evaporative Emission Separator 03-13-4
Evaporative Emission Valve 03-13-16
Fill Control Vent System 03-13-2
Fuel Tank Evaporative Emission System 03-13-2
Fuel Tank Filler Cap 03-13-4
Inspection and Verification 03-13-6
Pinpoint Test 03-13-6
Pressure and Vacuum Relief System 03-13-4
Removal and Installation 03-13-7
Special Service Tools/Equipment 03-13-16
Specifications 03-13-16
Symptom Chart 03-13-6
System Components 03-13-2

F

Fuel Charging and Controls, 5.8L Engine 03-04A-1
A/C Compressor Clutch Control Relay 03-04A-6
Adjustments 03-04A-14
Air Induction System 03-04A-3
Cleaning and Inspection 03-04A-13
Description and Operation 03-04A-1
Diagnosis and Testing 03-04A-6
Fuel Charging and Controls 03-04A-6
Fuel Charging System 03-04A-7
Fuel Charging Wiring 03-04A-5
03-04A-13

Fuel Charging and Controls, 5.8L Engine (Continued)
Fuel Injection Supply Manifold 03-04A-5
03-04A-11
Fuel Injection Timing 03-04A-2
Fuel Injectors 03-04A-4
03-04A-10
Fuel Pressure Regulator 03-04A-5
03-04A-13
Fuel Pressure Relief 03-04A-7
Fuel Pressure Relief Valve 03-04A-5
03-04A-11
Fuel Pump Relay 03-04A-6
03-04A-13
Fuel System 03-04A-1
Idle Speed 03-04A-14
Inertia Fuel Shutoff (IFS) Switch 03-04A-5
Intake Manifold 03-04A-4
Post-Service Procedures 03-04A-7
Pre-Service Procedures 03-04A-7
Removal and Installation 03-04A-7
Special Service Tools/Equipment 03-04A-14
Specifications 03-04A-14
Spring Lock Coupling 03-04A-7
Throttle Body 03-04A-3
03-04A-8
03-04A-13

Fuel Charging and Controls, 7.3L Diesel Engine 03-04C-1
Adjustments 03-04C-26
Air Induction System 03-04C-3
Cleaning and Inspection 03-04C-22
Coolant in Oil 03-04C-22
Description and Operation 03-04C-1
Diagnosis and Testing 03-04C-8
Fittings, Push Connect, Steel 03-04C-8
Fuel Charging and Controls 03-04C-8
Fuel Charging Wiring 03-04C-8
03-04C-20
Fuel Control, Manifold 03-04C-11
Fuel Damper, California Vehicles Only 03-04C-3
Fuel Filter, Fuel Heater, Water Separator, Draining 03-04C-9
Fuel Filter/Heater/Water Separator Assembly 03-04C-10
Fuel Heater 03-04C-9
Fuel in Coolant Leak 03-04C-25
Fuel Injection Timing 03-04C-3

Official Licensed Product
Ford Motor Company

Alphabetical Index

Fuel Charging and Controls, 7.3L Diesel Engine (Continued)
Fuel Injector 03-04C-16
Fuel Injectors 03-04C-5
Fuel Pressure Regulator 03-04C-7
03-04C-11
Fuel Pulse Damper, California Vehicles Only 03-04C-22
Fuel Pump 03-04C-4
03-04C-21
Fuel System 03-04C-1
Idle Speed 03-04C-26
Installation 03-04C-22
Oil Pressure Regulator 03-04C-20
Oil Pump Drive Gear and Oil Reservoir, High-Pressure 03-04C-14
Oil Pump, High-Pressure 03-04C-12
Pressure Regulator, Oil 03-04C-7
Removal and Installation 03-04C-8
Special Service Tools/Equipment 03-04C-26
Specifications 03-04C-26
Turbocharger System 03-04C-8

Fuel Charging and Controls, 7.5L Engine 03-04B-1
Adjustments 03-04B-13
Air Induction System 03-04B-3
Cleaning and Inspection 03-04B-12
Description and Operation 03-04B-1
Diagnosis and Testing 03-04B-6
Fuel Charging and Controls 03-04B-6
Fuel Charging System 03-04B-7
Fuel Charging Wiring 03-04B-5
03-04B-12
Fuel Injection Supply Manifold 03-04B-4
03-04B-10
Fuel Injection Timing 03-04B-2
Fuel Injectors 03-04B-4
03-04B-9
Fuel Pressure Regulator 03-04B-5
03-04B-12
Fuel Pressure Relief 03-04B-7
Fuel Pressure Relief Valve 03-04B-5
Fuel Pump Relay 03-04B-6
03-04B-12
Fuel System 03-04B-1
Idle Speed 03-04B-13
Inertia Fuel Shutoff (IFS) Switch 03-04B-5
Intake Manifold 03-04B-4
Post-Service Procedures 03-04B-7

Fuel Charging and Controls, 7.5L Engine (Continued)
Pre-Service Procedures 03-04B-7
Removal and Installation 03-04B-7
Simultaneous Multiport Fuel Injection (MFI) 03-04B-3
Special Service Tools/Equipment 03-04B-13
Specifications 03-04B-13
Spring Lock Coupling 03-04B-7
Throttle Body 03-04B-3
03-04B-8
03-04B-12

Fuel System, Service 10-00-1
Adjustments 10-00-2
Cleaning and Inspection 10-00-2
Description and Operation 10-00-1
Diagnosis and Testing 10-00-1
Engine Air Cleaner 10-00-2
Fuel Pump, Electric 10-00-2
Fuel System 10-00-1
10-00-2
Fuel System Service 10-00-1
Idle Air Control (IAC) Valve 10-00-2
Specifications 10-00-2
Throttle Body 10-00-2

Fuel Tank, Filters, Tubes and Electric Fuel Pump, Gasoline Engines 10-01A-1
Cleaning and Inspection 10-01A-29
Description and Operation 10-01A-1
Diagnosis and Testing 10-01A-11
Fuel and Vapor Return Tubes 10-01A-26
Fuel Draining 10-01A-11
Fuel Filling 10-01A-11
Fuel Filter, Fuel Injector Screen 10-01A-2
Fuel Filter, In-Line 10-01A-2
10-01A-23
Fuel Filter, In-Tank 10-01A-2
10-01A-22
Fuel Gauge 10-01A-11
Fuel Injected Engines 10-01A-1
Fuel Pressure Regulator 10-01A-11
10-01A-29
Fuel Pump 10-01A-9
Fuel System — Pressurized 10-01A-29
Fuel System Pressure Relief 10-01A-29
Fuel Tank and Fuel Tank Filler Pipe 10-01A-2
Fuel Tank Filler Cap 10-01A-2

Alphabetical Index

Fuel Tank, Filters, Tubes and Electric Fuel Pump, Gasoline Engines (Continued)
Fuel Tank Filler Pipe, F-250 Heavy Duty and F-350 ..... 10-01A-19
Fuel Tank Sending Unit 10-01A-11
Fuel Tank Sending Unit and Pump 10-01A-24
Fuel Tank Sending Unit and Pump, Units with Plastic Locking Ring, F-350 Chassis Cab 10-01A-25
Fuel Tank Support Straps 10-01A-19
Fuel Tank, Aft-of-Axle, F-250 Heavy Duty, F-350 and F-Super Duty 10-01A-15
Fuel Tank, Filters, Tubes and Electric Fuel Pump 10-01A-11
Fuel Tank, Steel Midship 10-01A-11
Fuel Tanks 10-01A-29
Fuel Tube Retainer 10-01A-28
Fuel Tubes 10-01A-2
Fuel Tubes, Steel 10-01A-29
Fuel Vapor Valve 10-01A-25
Inertia Fuel Shutoff (IFS) Switch 10-01A-11
Push Connect Fitting 10-01A-3
Push Connect Fittings, Steel 10-01A-26
Push Connect Tube Ends, Steel 10-01A-30
Removal and Installation 10-01A-11
Service Procedures 10-01A-29
Special Service Tools/Equipment 10-01A-32
Specifications 10-01A-30
Spring Lock Coupling 10-01A-3
10-01A-27

Fuel Tank, Filters, Tubes and Fuel Pump, Diesel Engine 10-01B-1
Cleaning and Inspection 10-01B-23
Description and Operation 10-01B-1
Diagnosis and Testing 10-01B-4
Fuel and Vapor Return Tubes 10-01B-24
Fuel and Vapor Return Tubes, Plastic 10-01B-20
Fuel Draining 10-01B-4
Fuel Filling 10-01B-4
Fuel Filter 10-01B-3
Fuel Gauge 10-01B-3
Fuel Pump 10-01B-16
Fuel Pump, Mechanical 10-01B-3
Fuel Return Tubes, Metal 10-01B-19
Fuel Selector Valve 10-01B-2
Fuel System Pressure Relief 10-01B-24
Fuel System Specifications 10-01B-25

Fuel Tank, Filters, Tubes and Fuel Pump, Diesel Engine (Continued)
Fuel System, Pressurized 10-01B-24
Fuel Tank and Fuel Tank Filler Pipe 10-01B-1
Fuel Tank Filler Cap 10-01B-2
Fuel Tank Filler Pipe 10-01B-13
Fuel Tank Sending Unit, Diesel 10-01B-3
Fuel Tank Support Straps 10-01B-13
Fuel Tank(s), Aft-of-Axle, F-250 Heavy Duty, F-350 and F-Super Duty Chassis Cab 10-01B-10
Fuel Tank(s), Plastic Midship, F-250 Heavy Duty and F-350 4x4 ..... 10-01B-8
Fuel Tank(s), Steel Midship, F-250 Heavy Duty, F-350 and F-Super Duty Chassis Cab 10-01B-4
Fuel Tank, Filters, Tubes and Fuel Pump 10-01B-4
Fuel Tanks 10-01B-23
Fuel Tubes 10-01B-3
Fuel Tubes, Filter and Water Separator 10-01B-23
Fuel/Water Separator 10-01B-3
10-01B-18
Push Connect Fittings 10-01B-3
10-01B-21
Push Connect Tube Ends, Steel 10-01B-24
Push Connectors, Nylon 10-01B-24
Removal and Installation 10-01B-4
Selector Valve, Auxiliary Fuel Tank 10-01B-22
Sending Unit, Fuel Tank (Metal Locking Ring) 10-01B-16
Sending Unit, Fuel Tank (Plastic Locking Ring) 10-01B-16
Service Procedures 10-01B-24
Special Service Tools/Equipment 10-01B-26
Specifications 10-01B-25

G

Glow Plug System 03-07B-1
Description and Operation 03-07B-1
Diagnosis and Testing 03-07B-2
Glow Plug 03-07B-2
Glow Plug Relay 03-07B-2
03-07B-3
Glow Plug System 03-07B-1
03-07B-2
Glow Plugs 03-07B-1

Alphabetical Index

Glow Plug System (Continued)
Removal and Installation 03-07B-2
Specifications 03-07B-3

I

Ignition, Distributor 03-07A-1
Adjustments 03-07A-13
Cleaning and Inspection 03-07A-10
Description and Operation 03-07A-1
Diagnosis and Testing 03-07A-3
Disassembly and Assembly 03-07A-10
Distributor 03-07A-3
03-07A-10
Distributor Cap 03-07A-3
03-07A-10
Distributor Rotor 03-07A-3
03-07A-10
Ignition 03-07A-3
Ignition Coil 03-07A-1
03-07A-6
03-07A-13
Ignition Control Module 03-07A-2
03-07A-7
Ignition System Features 03-07A-1
Ignition Timing 03-07A-13
Ignition Wires 03-07A-7
03-07A-13
Removal and Installation 03-07A-3
Spark Plugs 03-07A-9
03-07A-10
03-07A-13
Special Service Tools/Equipment 03-07A-14
Specifications 03-07A-13
Stator 03-07A-4
Universal Distributor 03-07A-2

S

Speed Control System, Electronic 10-03-1
Actuator Cable 10-03-12
Adjustments 10-03-12
Brake On/Off (BOO) Switch 10-03-11
Clutch Pedal Position Switch 10-03-12

Speed Control System, Electronic (Continued)
Deactivator Switch 10-03-12
Description and Operation 10-03-1
Diagnosis and Testing 10-03-4
Electrical Schematics 10-03-4
Inspection and Verification 10-03-4
Pinpoint Tests 10-03-6
Removal and Installation 10-03-10
Special Service Tools/Equipment 10-03-12
Specifications 10-03-12
Speed Control Actuator 10-03-10
Speed Control Actuator, 7.3L Diesel 10-03-12
Speed Control Servo 10-03-10
Speed Control System 10-03-1
Symptom Chart 10-03-4

Starting System 03-06-1
Armature 03-06-18
Bearings (Diesel Engine Only) 03-06-19
Brush and Brush Holder 03-06-19
Brush Spring Tension Inspection 03-06-19
Bushings 03-06-19
Cleaning and Inspection 03-06-18
Component Tests 03-06-12
Description and Operation 03-06-1
Diagnosis and Testing 03-06-8
Disassembly and Assembly 03-06-17
Electrical Schematic(s) 03-06-8
Field Coil Inspection 03-06-19
Inspection and Verification 03-06-8
Jump-Starting 03-06-17
Overrunning Clutch 03-06-5
Pinpoint Tests 03-06-9
Removal and Installation 03-06-17
Road Service 03-06-17
Sequence of Operation 03-06-6
Service Procedures 03-06-17
Special Service Tools/Equipment 03-06-20
Starter 03-06-12
Starter Drive and/or Flywheel Ring Gear Inspection 03-06-19
Starter Frame and Magnet 03-06-19
Starter Motor 03-06-3
03-06-17
Starter Relay 03-06-6
03-06-17
Starter Solenoid 03-06-5
03-06-16

Official Licensed Product
Ford Motor Company

Alphabetical Index

Starting System (Continued)
Starter System 03-06-1
Symptom Chart 03-06-8

Starting System, Diesel Engine 03-06B-1
Adjustments 03-06B-4
Armature Replacement, Starter Motor 03-06B-4
Bearings 03-06B-4
Brush Replacement 03-06B-4
Description and Operation 03-06B-1
Diagnosis and Testing 03-06B-1
Disassembly and Assembly 03-06B-2
Removal and Installation 03-06B-1
Specifications 03-06B-5
Starter Drive Pinion Depth Adjustment 03-06B-4
Starter Drive Replacement 03-06B-4
Starter Motor 03-06B-1
03-06B-2
Starter Relay 03-06B-1
Starter System 03-06B-1

Starting System, Gasoline Engines 03-06A-1
Armature Replacement, Starter Motor 03-06A-4
Bushing Replacement 03-06A-5
Cleaning and Inspection 03-06A-5
Description and Operation 03-06A-1
Diagnosis and Testing 03-06A-1
Disassembly and Assembly 03-06A-3
Removal and Installation 03-06A-1
Service Procedures 03-06A-5
Specifications 03-06A-5
Starter Drive Replacement 03-06A-4
Starter Motor 03-06A-2
03-06A-3
Starter Relay 03-06A-1
Starter System 03-06A-1
03-06A-5

T

Transfer Case, 4x4 System, Service 07-07A-1
2-Wheel Drive — High Range 07-07A-4
4-Wheel Drive — High Range 07-07A-5
4-Wheel Drive — Low Range 07-07A-6
4-Wheel Drive Operation 07-07A-7
4x4 Vehicle Driveline Windup 07-07A-8

Transfer Case, 4x4 System, Service (Continued)
Description and Operation 07-07A-1
Diagnosis and Testing 07-07A-9
Inspection and Verification 07-07A-9
Locking Hubs 07-07A-7
Mechanical Operation 07-07A-3
Mechanical Shift System 07-07A-1
Transfer Case 07-07A-9
Transfer Case, Chain-Driven 07-07A-1
Windup and Delay — Shifting Out of 4-Wheel Drive 07-07A-8

Transfer Case, Heavy-Duty, Manual Shift 07-07C-1
Adjustments 07-07C-12
Description and Operation 07-07C-1
Diagnosis and Testing 07-07C-2
Disassembly and Assembly 07-07C-4
Fluid Level Check 07-07C-12
Gearshift Lever 07-07C-4
Indicator Switch 07-07C-2
Input Shaft Yoke to Flange 07-07C-4
Mechanical Shift System 07-07C-1
Oil Seal 07-07C-4
Output Yoke 07-07C-4
Removal and Installation 07-07C-2
Special Service Tools/Equipment 07-07C-12
Specifications 07-07C-12
Transfer Case 07-07C-2
07-07C-4
Transfer Case Without PTO 07-07C-12

Transfer Case, Manual Shift 07-07B-1
Adjustments 07-07B-18
Description and Operation 07-07B-1
Diagnosis and Testing 07-07B-2
Disassembly and Assembly 07-07B-5
Fluid Level Check 07-07B-18
Gearshift Lever 07-07B-4
Indicator Switch 07-07B-2
Input Shaft Yoke to Flange 07-07B-4
Mechanical Shift System 07-07B-1
Oil Seal 07-07B-4
Output Shaft, Rear Extension Housing 07-07B-4
Output Yoke 07-07B-5
Removal and Installation 07-07B-2
Special Service Tools/Equipment 07-07B-19
Specifications 07-07B-19

Official Licensed Product

Alphabetical Index

Transfer Case, Manual Shift (Continued)
Transfer Case 07-07B-2
07-07B-5
07-07B-18
Vehicles Equipped with a PTO 07-07B-18

Transmission, Automatic, Cooling 07-02-1
Cleaning and Inspection 07-02-7
Description and Operation 07-02-1
Diagnosis and Testing 07-02-1
Fluid Cooler Hose(s) 07-02-7
Fluid Cooler Tube(s) 07-02-4
Fluid Cooler, Auxiliary 07-02-1
Fluid Cooler, Integral 07-02-1
Inspection and Verification 07-02-1
Removal and Installation 07-02-2
Specifications 07-02-8
Symptom Chart 07-02-2
Transmission Fluid Cooler 07-02-1
07-02-7
Transmission Fluid Cooler Tube(s)/Hose(s) 07-02-8
Transmission Fluid Cooler, Auxiliary 07-02-2

Transmission, Automatic, E4OD 07-01-1
After On-Board Diagnostics 07-01-38
Air Pressure Tests 07-01-74
Assembly 07-01-200
Bushings, Bearings and Thrust Washers Locator 07-01-10
Case 07-01-228
Center Support 07-01-179
Cleaning and Inspection 07-01-227
Coast Clutch Assembly 07-01-166
Description and Operation 07-01-2
Diagnosis and Testing 07-01-28
Diagnosis by Symptom 07-01-80
Diagnosis by Symptom Index 07-01-80
Diagnostic Flowchart 07-01-29
Diagnostic Strategy 07-01-28
Diagnostic Trouble Code Chart 07-01-39
Diagnostics 07-01-35
Direct Clutch Assembly and Intermediate Brake Drum 07-01-180
Disassembly 07-01-137
Disassembly/Reassembly of Subassemblies 07-01-152
Electrical Connectors 07-01-228
Engine Idle Speed Check 07-01-72

Transmission, Automatic, E4OD (Continued)
Extension Housing 07-01-195
Extension Housing Gasket 07-01-120
Extension Housing Seal and Bushing 07-01-118
Fluid Cooler Lines 07-01-126
Fluid Pan, Gasket and Filter 07-01-129
Forward Clutch Assembly 07-01-186
Forward Hub and Ring Gear 07-01-179
Forward Planet Assembly 07-01-192
Forward, Direct, Intermediate, Overdrive, Coast and Reverse Clutches 07-01-228
Front and Rear Case Bushings 07-01-152
Heat Shield 07-01-128
Identification Tag 07-01-3
In-Vehicle Service 07-01-108
Input Shell 07-01-193
Installation 07-01-223
Intermediate Band Assembly and Intermediate Brake Band Servo Assembly 07-01-179
Intermediate/Overdrive Cylinder Assembly 07-01-175
Leakage Inspection 07-01-76
Line Pressure Test 07-01-72
Low One-Way Clutch Assembly 07-01-195
Main Components and Functions 07-01-14
Main Control Valve Body 07-01-110
07-01-155
07-01-227
Manual Control Lever Shaft Seal 07-01-121
On-Board Diagnostics with NGS 07-01-35
One-Way Clutch 07-01-228
Output Shaft 07-01-192
07-01-228
Overdrive Ring Gear and Center Shaft Assembly 07-01-170
Park System 07-01-131
Pinpoint Tests 07-01-53
Planet Assemblies 07-01-228
Preliminary Inspection 07-01-29
Pump Assembly 07-01-158
Removal 07-01-132
Reverse Clutch 07-01-195
Reverse Clutch Piston 07-01-197
Reverse Planet Assembly 07-01-195
Seals, Rings and Gaskets Locator 07-01-12
Shift Linkage Check 07-01-110
Special Service Tools/Equipment 07-01-232

Alphabetical Index

Transmission, Automatic, E4OD (Continued)
Special Testing Procedures 07-01-72
Specifications 07-01-229
Stall Speed Test 07-01-73
Thrust Bearings 07-01-228
Torque Converter 07-01-228
Torque Converter and Fluid Cooler 07-01-227
Torque Converter Checks 07-01-197
Torque Converter Drainback Test 07-01-75
Transmission 07-01-132
07-01-137
07-01-200
07-01-223
07-01-227
Transmission Control Switch (TCS) and Lamp Operation 07-01-14
Transmission Description 07-01-2
Transmission Electronic Control System 07-01-22
Transmission Fluid Cooler 07-01-79
Transmission Fluid Cooler and Cooler Tubes Flushing and Cleaning 07-01-79
07-01-227
Transmission Fluid Cooler Tube Leakage 07-01-229
Transmission Fluid Drain and Refill 07-01-108
Transmission Range Selection 07-01-13
Transmission Shift Patterns 07-01-14
Transmission Tester 07-01-45
Transmission Vehicle Harness Connectors 07-01-53
Transmission, Disassembled View 07-01-5
Verification of Condition 07-01-30

Transmission, Automatic, External Controls 07-05-1
Brake Shift Interlock System 07-05-1
Brake Shift Lock Actuator 07-05-5
Description and Operation 07-05-1
Diagnosis and Testing 07-05-2
Electrical Schematic Reference(s) 07-05-2
Gearshift Lever and Housing 07-05-7
Inspection and Verification 07-05-2
Pinpoint Tests 07-05-3
Removal and Installation 07-05-5
Shift Control Linkage 07-05-1
Symptom Chart 07-05-2
Transmission Control Switch 07-05-2
07-05-8
Transmission Shift Cable and Bracket 07-05-6

Transmission, Automatic, External Controls (Continued)
Transmission, Automatic, External Controls 07-05-2

Transmission, Manual, Model S5-47 ZF 07-03-1
Adjustments 07-03-65
Assembly 07-03-49
Bearing Preload Adjustment 07-03-65
Bearing Retainers 07-03-65
Bearing, Countershaft 07-03-48
Bearings 07-03-63
Case 07-03-27
Cleaning and Inspection 07-03-62
Countershaft 07-03-64
Countershaft Tapered Roller Bearing Preload Measurement 07-03-66
Description and Operation 07-03-1
Diagnosis and Testing 07-03-4
Disassembly 07-03-19
Disassembly and Assembly of Subassemblies 07-03-27
Extension Housing 07-03-63
Extension Housing — Shift Rail Bearing, Countershaft and Mainshaft Bearing Outer Race 07-03-25
07-03-58
Front Seal 07-03-17
Gear Ratios 07-03-67
Gears 07-03-64
Input Shaft 07-03-64
Input Shaft and Bearing 07-03-30
Input Shaft and Mainshaft Tapered Roller Bearing Preload Measurement 07-03-65
Inspection and Verification 07-03-4
Inspection Standards and Tolerances 07-03-68
Installation 07-03-57
Mainshaft 07-03-32
Output Shaft 07-03-64
Powerflow 07-03-3
Rear Seal 07-03-59
Rear Seal, 4x2 Transmissions (Except F-Super Duty) 07-03-18
Rear Seal, 4x4 and F-Super Duty Series Transmissions 07-03-18
Removal 07-03-13
Shift Lever and Boot 07-03-18
07-03-57
Shift Lever Housing 07-03-27

Alphabetical Index

Transmission, Manual, Model S5-47 ZF (Continued)
Special Service Tools/Equipment 07-03-69
Specifications 07-03-67
Speedometer Gears 07-03-65
Symptom Charts 07-03-6
Synchronizers 07-03-64
Thrust Washers 07-03-65
Transmission 07-03-4
07-03-19
07-03-49
07-03-62
Transmission (4x2) 07-03-13
07-03-59
Transmission (4x4) 07-03-16
07-03-62

Turbocharger, 7.3L Diesel Engine 03-04D-1
Air Inlet Tube 03-04D-9
Air Intake Hose 03-04D-9
Air Intake Manifold 03-04D-2
Air-Fuel/Exhaust Gas Flow 03-04D-2
Bearing Clearance Check 03-04D-6
Center Housing 03-04D-2
Check Axial End Play 03-04D-7
Check for Free Rotation 03-04D-6
Component Tests 03-04D-6
Compressor 03-04D-2
Description and Operation 03-04D-1
Diagnosis and Testing 03-04D-4
Disassembly and Assembly 03-04D-10
Exhaust Inlet Adapter 03-04D-10
Pinpoint Test 03-04D-5
Removal and Installation 03-04D-7
Special Service Tools/Equipment 03-04D-13
Specifications 03-04D-13
Symptom Chart 03-04D-5
Turbine 03-04D-1
Turbocharger 03-04D-4
03-04D-7
03-04D-10
Turbocharger Internal Oil Leak Test 03-04D-6
Turbocharger Leak Test 03-04D-6
Turbocharger System 03-04D-1

W

Wheel Hubs and Bearings, Front Wheels, 4-Wheel Drive 05-03C-1
Adjustments 05-03C-9
Automatic Locking Hubs 05-03C-2
05-03C-9
Description and Operation 05-03C-1
Diagnosis and Testing 05-03C-2
Disassembly and Assembly 05-03C-8
Front Wheel Bearing 05-03C-9
Inspection and Verification 05-03C-2
Locking Hubs 05-03C-1
Locking Hubs, Automatic 05-03C-6
Locking Hubs, Manual 05-03C-4
Manual Locking Hubs 05-03C-2
05-03C-10
Pinpoint Test 05-03C-3
Removal and Installation 05-03C-4
Replacement and Repacking 05-03C-8
Road Test 05-03C-2
Special Service Tools/Equipment 05-03C-12
Specifications 05-03C-11
Symptom Chart 05-03C-3
Wheel Grease Seal and Bearing, Front 05-03C-8

Wheel Hubs and Bearings, Rear, Dana Full-Floating Axle 05-02D-1
Adjustments 05-02D-5
Bearings, Cups and Seals 05-02D-2
Description and Operation 05-02D-1
Diagnosis and Testing 05-02D-1
Disassembly and Assembly 05-02D-2
Special Service Tools/Equipment 05-02D-5
Specifications 05-02D-5
Wheel Hubs and Bearings 05-02D-1
05-02D-5

Wheel Hubs and Bearings, Rear, Ford Full-Floating Axle 05-02A-1
Axle Shaft, Hub, Oil Seal and Outer Wheel Bearing 05-02A-4
Brakes, Anti-Lock, Rear 05-02A-4
Description and Operation 05-02A-1
Diagnosis and Testing 05-02A-4
Disassembly and Assembly 05-02A-10
Hub Assembly, Full-Floating 05-02A-1
Hub, Full-Floating Axle 05-02A-10

Official Licensed Ford Motorcraft

Alphabetical Index

Wheel Hubs and Bearings, Rear, Ford Full-Floating Axle (Continued)
Removal and Installation 05-02A-4
Special Service Tools/Equipment 05-02A-16
Wheel Hubs and Bearings, Rear, Ford Full-Floating Axle (Continued)
Specifications 05-02A-15
Wheel Hubs and Bearings 05-02A-4

Official Licensed Product
Ford Motor Company

WE WANT TO HEAR FROM YOU

Your suggestions will help us to improve future editions of this manual.

Instructions:

- Use only one form for each publication
- Use separate form for each concern
- Do not use this form to order publications
- Mail the completed form to the address on the reverse side

OR

- FAX the completed form to (313) 390-8727

Date:_____

Publication:

- ☐ Passenger Car Workshop Manual
- ☐ Owner Guide
- ☐ Wiring Diagram
- ☐ Body Repair Manual
- ☐ Truck Workshop Manual
- ☐ PC/ED Manual
- ☐ EVTM

Vehicle Line:_____ **Model Year:**_____

Please check the area in which the concern is located in the publication:

- ☐ Service Information
- ☐ Body
- ☐ Frame and Mounting
- ☐ Engine
- ☐ Suspension
- ☐ Driveline
- ☐ Brakes
- ☐ Transmission/Transaxle
- ☐ Clutch
- ☐ Exhaust
- ☐ Fuel
- ☐ Climate Control
- ☐ Instrumental Warning
- ☐ Battery/Charging
- ☐ Audio
- ☐ Lighting
- ☐ Electrical
- ☐ Schematics
- ☐ Pinpoint Test

Section and Pages:_____

Official Published Product
Ford Motor Company

Explain your concern or suggestion below: ***(Please print)***

_____

_____

_____

_____

What do you think is the main cause of your concern?

- ☐ Missing Information
- ☐ Inaccurate Information
- ☐ Incomplete Information

Please tell us who you are: ***(Please print)***

Your Name:_____

Company Name:_____

Street:_____

City:_____ **State:**_____ **Zip/Postal Code:**_____

Phone Number:_____ **FAX Number:**_____

Occupation: *(Please mark box)*

- ☐ Ford Dealership Technician
- ☐ Home Mechanic
- ☐ Technician - Other than Ford Dealership
- ☐ Ford Dealership Service Manager
- ☐ Engineer
- ☐ Other:_____

Are there features of this publication that you would like to see changed or expanded?

- ☐ Organization
- ☐ Technical Detail
- ☐ Format and Style
- ☐ Other:_____

How would you suggest we change the publication?

_____

_____

_____

DO NOT STAPLE — USE TRANSPARENT TAPE

Official Licensed Product
Ford Motor Company

NO POSTAGE
NECESSARY
IF MAILED
IN THE
UNITED STATES

BUSINESS REPLY MAIL

FIRST CLASS PERMIT NO. 400 DEARBORN, MI

POSTAGE WILL BE PAID BY ADDRESSEE

Technical Service Publications
Service Manual
P.O. Box 2592
Dearborn, MI 48123-2592

WE WANT TO HEAR FROM YOU

Your suggestions will help us to improve future editions of this manual.

Instructions:

- Use only one form for each publication
- Use separate form for each concern
- Do not use this form to order publications
- Mail the completed form to the address on the reverse side

OR

- FAX the completed form to (313) 390-8727

Date:_____

Publication:

- ☐ Passenger Car Workshop Manual
- ☐ Owner Guide
- ☐ Wiring Diagram
- ☐ Body Repair Manual
- ☐ Truck Workshop Manual
- ☐ PC/ED Manual
- ☐ EVTM

Vehicle Line:_____ **Model Year:**_____

Please check the area in which the concern is located in the publication:

- ☐ Service Information
- ☐ Body
- ☐ Frame and Mounting
- ☐ Engine
- ☐ Suspension
- ☐ Driveline
- ☐ Brakes
- ☐ Transmission/Transaxle
- ☐ Clutch
- ☐ Exhaust
- ☐ Fuel
- ☐ Climate Control
- ☐ Instrumental Warning
- ☐ Battery/Charging
- ☐ Audio
- ☐ Lighting
- ☐ Electrical
- ☐ Schematics
- ☐ Pinpoint Test

Official Licensed Product
Ford Motor Company

Section and Pages:_____

Explain your concern or suggestion below: ***(Please print)***

_____

_____

_____

_____

What do you think is the main cause of your concern?

- ☐ Missing Information
- ☐ Inaccurate Information
- ☐ Incomplete Information

Please tell us who you are: ***(Please print)***

Your Name:_____

Company Name:_____

Street:_____

City:_____ **State:**_____ **Zip/Postal Code:**_____

Phone Number:_____ **FAX Number:**_____

Occupation: *(Please mark box)*

- ☐ Ford Dealership Technician
- ☐ Home Mechanic
- ☐ Technician - Other than Ford Dealership
- ☐ Ford Dealership Service Manager
- ☐ Engineer
- ☐ Other:_____

Are there features of this publication that you would like to see changed or expanded?

- ☐ Organization
- ☐ Technical Detail
- ☐ Format and Style
- ☐ Other:_____

How would you suggest we change the publication?

_____

_____

_____

DO NOT STAPLE — USE TRANSPARENT TAPE

Official Licensed Product
Ford Motor Company

NO POSTAGE
NECESSARY
IF MAILED
IN THE
UNITED STATES

BUSINESS REPLY MAIL

FIRST CLASS PERMIT NO. 400 DEARBORN, MI

POSTAGE WILL BE PAID BY ADDRESSEE

Technical Service Publications
Service Manual
P.O. Box 2592
Dearborn, MI 48123-2592